AUTHENTICATED
U.S. GOVERNMENT
INFORMATION
GPO



FIGURES TO PART 1194

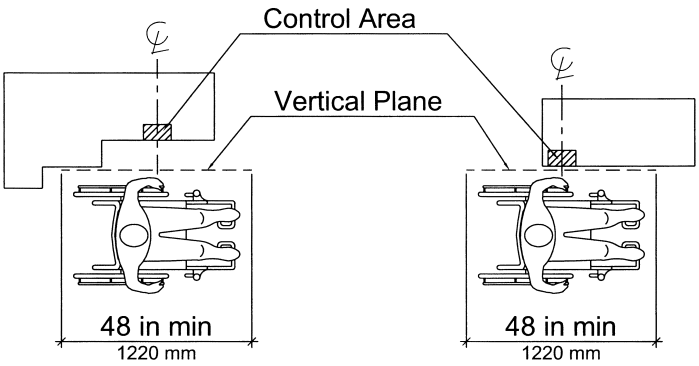


Vertical Plane Relative to the Operable Control

Figure 1

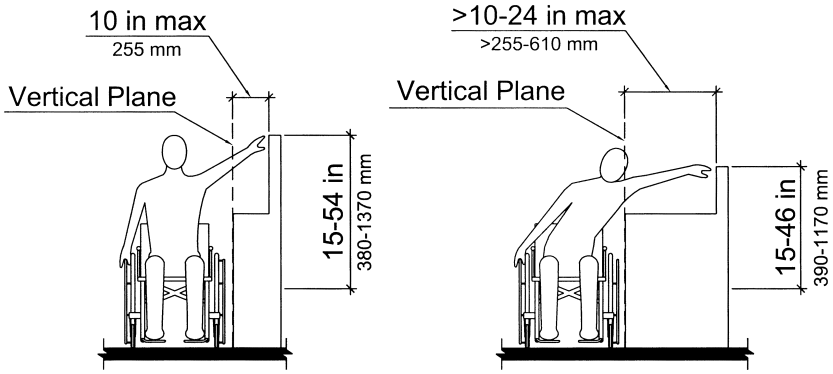


Height of Operable Control Relative to the Vertical Plane

Figure 2

**PARTS 1195–1199 [RESERVED]**

# CHAPTER XII—NATIONAL ARCHIVES AND RECORDS ADMINISTRATION

EDITORIAL NOTE: Nomenclature changes to chapter XII appear at 69 FR 18803, Apr. 9, 2004.

SUBCHAPTER A—GENERAL RULES


| *Part* | | *Page* |
|---|---|---|
| 1200 | Official seals | 487 |
| 1201 | Collection of claims | 499 |
| 1202 | Regulations implementing the Privacy Act of 1974 | 514 |
| 1206 | National Historical Publications and Records Commission | 524 |
| 1207 | Uniform administrative requirements for grants and cooperative agreements to State and local governments | 533 |
| 1208 | Enforcement of nondiscrimination on the basis of handicap in programs or activities conducted by the National Archives and Records Administration | 560 |
| 1210 | Uniform administrative requirements for grants and agreements with institutions of higher education, hospitals, and other non-profit organizations | 566 |
| 1211 | Nondiscrimination on the basis of sex in education programs or activities receiving Federal financial assistance | 591 |
| 1212 | Governmentwide requirements for drug-free workplace (financial assistance) | 613 |


SUBCHAPTER B—RECORDS MANAGEMENT


| | | |
|---|---|---|
| 1220 | Federal records; general | 619 |
| 1222 | Creation and maintenance of Federal records | 624 |
| 1223 | Managing vital records | 629 |
| 1224 | Records disposition program | 632 |
| 1225 | Scheduling records | 633 |
| 1226 | Implementing disposition | 637 |
| 1227 | General records schedules | 641 |
| 1228 | Loan of permanent and unscheduled records | 642 |
| 1229 | Emergency authorization to destroy records | 643 |

| Part | | Page |
|---|---|---|
| 1230 | Unlawful or accidental removal, defacing, alteration, or destruction of records | 644 |
| 1231 | Transfer of records from the custody of one executive agency to another | 645 |
| 1232 | Transfer of records to records storage facilities | 646 |
| 1233 | Transfer, use, and disposition of records in a NARA Federal Records Center | 649 |
| 1234 | Facility standards for records storage facilities | 652 |
| 1235 | Transfer of records to the National Archives of the United States | 669 |
| 1236 | Electronic records management | 676 |
| 1237 | Audiovisual, cartographic, and related records management | 681 |
| 1238 | Microforms records management | 688 |
| 1239 | Program assistance and inspections | 695 |
| 1240–1249 | [Reserved] | |

SUBCHAPTER C—PUBLIC AVAILABILITY AND USE

| | | |
|---|---|---|
| 1250 | Public availability and use of Federal Records | 698 |
| 1251 | Testimony by NARA employees relating to agency information and production of records in legal proceedings | 707 |
| 1252 | Public use of records, donated historical materials, and facilities; general | 713 |
| 1253 | Location of NARA facilities and hours of use | 714 |
| 1254 | Using records and donated historical materials | 717 |
| 1256 | Access to records and donated historical materials | 735 |
| 1258 | Fees | 745 |

SUBCHAPTER D—DECLASSIFICATION

| | | |
|---|---|---|
| 1260 | Declassification of national security information | 750 |

SUBCHAPTER E—PRESIDENTIAL RECORDS

| | | |
|---|---|---|
| 1270 | Presidential records | 760 |

SUBCHAPTER F—NIXON PRESIDENTIAL MATERIALS

| | | |
|---|---|---|
| 1275 | Preservation and protection of and access to the Presidential historical materials of the Nixon Administration | 765 |

SUBCHAPTER G—NARA FACILITIES

| | | |
|---|---|---|
| 1280 | Use of NARA facilities | 782 |
| 1281 | Presidential library facilities | 794 |

| Part | | Page |
|---|---|---|
| 1284 | Exhibits | 798 |

SUBCHAPTER H—JFK ASSASSINATION RECORDS

| | | |
|---|---|---|
| 1290 | Guidance for interpretation and implementation of the President John F. Kennedy Assassination Records Collection Act of 1992 (JFK Act) | 800 |
| 1291–1299 | [Reserved] | |

# SUBCHAPTER A—GENERAL RULES

## PART 1200—OFFICIAL SEALS

### Subpart A—General

Sec.
1200.1 Definitions.

### Subpart B—How are NARA's Official Seals and Logos Designed and Used?

1200.2 How is each NARA seal designed?
1200.4 How does NARA use its official seals?
1200.6 Who is authorized to apply the official seals on documents or other materials?
1200.7 What are NARA logos and how are they used?

### Subpart C—Procedures for the Public To Request and Use NARA Seals and Logos

1200.8 How do I request to use the official seals and logos?
1200.10 What are NARA's criteria for approval?
1200.12 How does NARA notify me of the determination?
1200.14 What are NARA's conditions for the use of the official seals and logos?

### Subpart D—Penalties for Misuse of NARA Seals and Logos

1200.16 Will I be penalized for misusing the official seals and logos?

AUTHORITY: 18 U.S.C. 506, 701, and 1017; 44 U.S.C. 2104(e), 2116(b), 2302.

SOURCE: 67 FR 72101, Dec. 4, 2002, unless otherwise noted.

## Subpart A—General

### § 1200.1 Definitions.

The following definitions apply to this part:

*Embossing seal* means a display of the form and content of the official seal made on a die so that the seal can be embossed on paper or other medium.

*NARA* means all organizational units of the National Archives and Records Administration.

*NARA logo* means a name, trademark, service mark, or symbol used by NARA in connection with its programs, products, or services.

*Official seal* means the original(s) of the seal showing the exact form and content.

*Replica or reproduction* means a copy of an official seal or NARA logo displaying the form and content.

[67 FR 72101, Dec. 4, 2002, as amended at 69 FR 26046, May 11, 2004]

## Subpart B—How are NARA's Official Seals and Logos Designed and Used?

### § 1200.2 How is each NARA seal designed?

NARA's three official seals are illustrated in Figures 1, 2, and 30.

A description of each seal is as follows:

(a) *The National Archives and Records Administration seal.* The design is illustrated below in Figure 1 and described as follows:

(1) The seal is centered on a disc with a double-line border.

(2) The words ''NATIONAL ARCHIVES AND RECORDS ADMINISTRATION'' encircle the inside of the seal and the date 1985 is at the bottom center.

(3) A solid line rendition of a heraldic eagle displayed holding in its left talon 13 arrows, in its right talon a branch of olive, bearing on its breast a representation of the shield of the United States.

(4) Displayed above the eagle's head is a partially unrolled scroll inscribed with the words ''LITTERA SCRIPTA MANET'' one above the other.

Figure 1 – The National Archives and Records Administration Seal

(b) *National Archives seal.* The design is illustrated below and described as in paragraph (a) of this section. However, the words ''THE NATIONAL ARCHIVES OF THE UNITED STATES'' encircle the inside of the seal and the date 1934 is at the bottom center.

Figure 2 – The National Archives Seal

(c) *National Archives Trust Fund Board seal.* The design is illustrated below and described as in paragraph (a) of this section. However, the words ''NATIONAL ARCHIVES TRUST FUND BOARD'' encircle the inside of the seal and the date 1941 is at the bottom center.

Figure 3 – National Archives Trust Fund Board Seal

**§ 1200.4 How does NARA use its official seals?**

NARA uses its three official seals to authenticate various copies of documents and for informational purposes as follows:

(a) The National Archives and Records Administration seal, dated 1985, is used:

(1) For official business;

(2) To authenticate copies of Federal records in NARA's temporary custody and copies of NARA operational records; and

(3) For informational purposes with NARA's prior approval (includes use by NARA employees, the public, and other Federal agencies).

(b) The National Archives seal, dated 1934, is used to authenticate copies of documents in NARA's permanent legal custody.

(c) The National Archives Trust Fund Board seal, dated 1941, is used for Trust Fund documents and publications.

[67 FR 72101, Dec. 4, 2002, as amended at 76 FR 1524, Jan. 11, 2011]

**§ 1200.6 Who is authorized to apply the official seals on documents or other materials?**

The Archivist of the United States (and the Archivist's designee) is the only individual authorized to apply NARA official seals, embossing seals, and replicas and reproductions of seals to appropriate documents, authentications, and other material. NARA accepts requests to use the official seals and approves or denies them based on the criteria identified in § 1200.10.

**§ 1200.7 What are NARA logos and how are they used?**

(a) *Agency logo*. NARA has one official agency logo, which is illustrated as follows:

(b) The official agency logo is used:

(1) On agency letterhead and business cards;

(2) On all NARA web and social media sites (intranet and internet), whether hosted internally, remotely, or on a public forum (including sites on which a NARA office or program logo also appears);

(3) On exhibits;

(4) On publicity and other branding materials, and on items associated with a one-time or recurring NARA event or activity;

(5) On agency communications and presentations; and

(6) On other items as approved by the Archivist or his designee.

(c) The official agency logo does not replace NARA's official seals on other agency official business, such as certified records, the FEDERAL REGISTER, and authenticated copies.

(d) *Office and program logos.* NARA's official office and program logos include, but are not limited to, those illustrated as follows:

(1) The Federal Records Center Program;

(2) The National Historical Publications and Records Commission;

(3) American Originals;

(4) Electronic Records Archives;

(5) The Archival Research Catalog;

(6) The Archives Library Information Center;

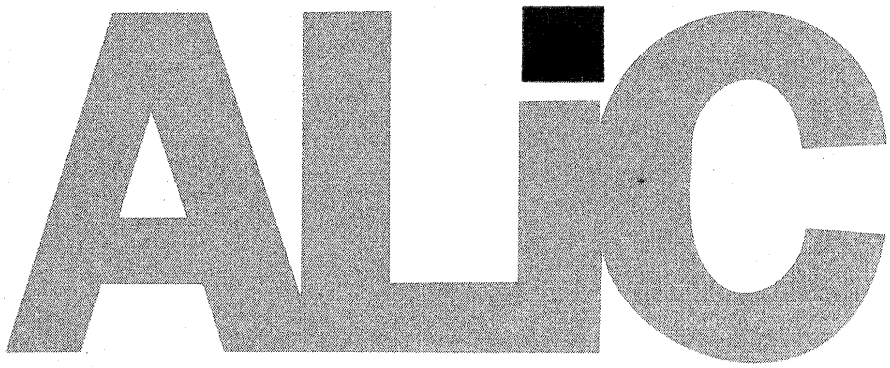


(7) Presidential Libraries;

(8) Federal Register publications.

(i) Electronic Code of Federal Regulations.

(ii) Regulations.gov and FedReg.gov Web sites.

(iii) FEDERAL REGISTER paper edition.

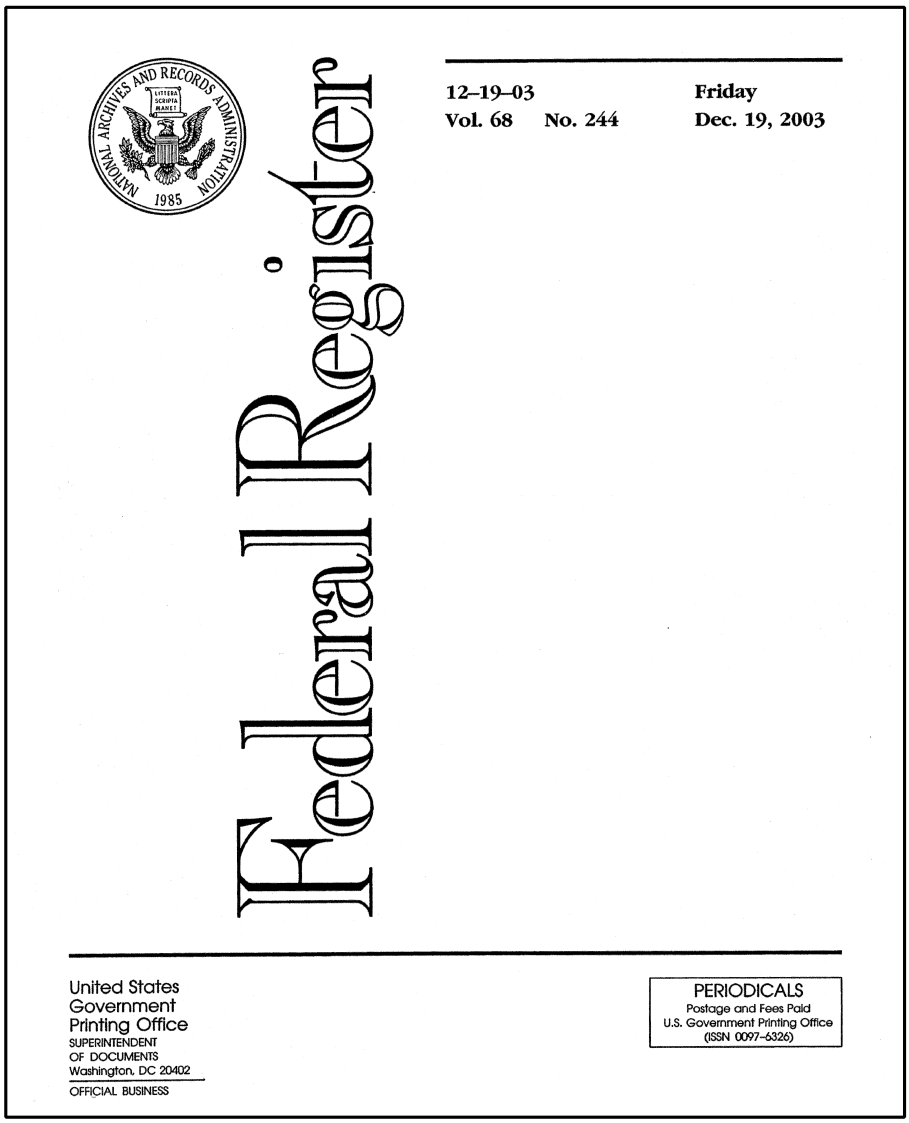


(iv) Code of Federal Regulations paper edition;

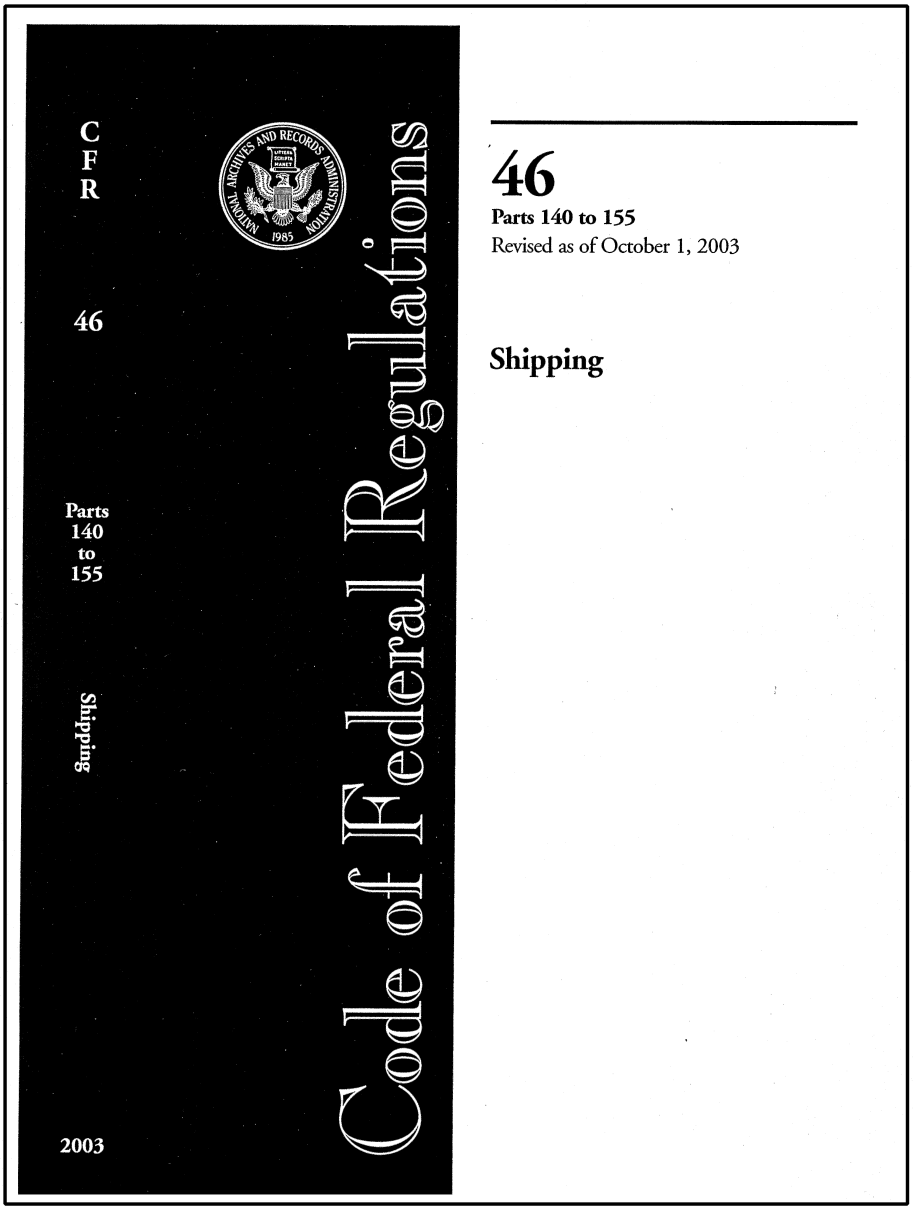


(9) Regional archives:
(i)

(ii) Each regional archives has the same logo design with the geographic location of the facility added.

(10) The Office of Government Information Services (OGIS);

(11) The Controlled Unclassified Information Office (CUI); and

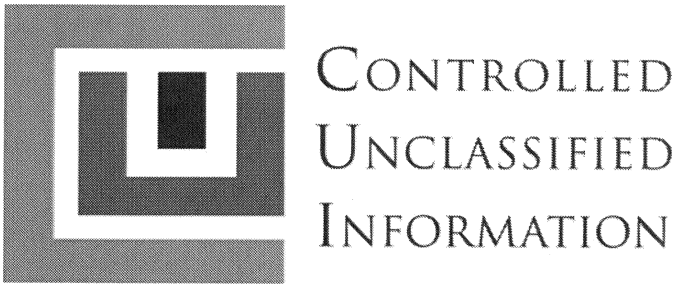


(12) The National Declassification Center (NDC).

NATIONAL
DECLASSIFICATION
CENTER

(e) *Other official NARA logos.* For inquiries on other official NARA logos, contact the Office of General Counsel (NGC). Send written inquiries to the Office of General Counsel (NGC), Room 3110, 8601 Adelphi Rd., College Park, MD 20740–6001.

(f) NARA uses its office, program, and other official logos (usually in conjunction with the agency logo) for official business, which includes, but is not limited to:

(1) Exhibits;

(2) Publicity and other materials associated with a one-time or recurring NARA event or activity;

(3) NARA Web sites (Intranet and Internet);

(4) Officially approved internal and external publications; and

(5) Presentations.

(g) *Use of logos by others.* NARA logos may be used by the public and other Federal agencies for events or activities co-sponsored by NARA, but only with the written approval of the Archivist or his designee. *See* Subpart C for procedures to request approval for use.

[69 FR 26046, May 11, 2004, as amended at 71 FR 26834, May 9, 2006; 75 FR 19556, Apr. 15, 2010; 76 FR 1524, Jan. 11, 2011]

## Subpart C—Procedures for the Public To Request and Use NARA Seals and Logos

### § 1200.8 How do I request to use the official seals and logos?

You may only use the official seals and logos if NARA approves your written request. Follow the procedures in this section to request authorization.

(a) Prepare a written request explaining, in detail:

(1) The name of the individual/organization requesting use and how it is associated with NARA;

(2) Which of the official seals and/or logos you want to use and how each is going to be displayed. Provide a sample of the document or other material on which the seal(s) and/or logo(s) would appear, marking the sample in all places where the seal(s) and/or logo(s) would be displayed;

(3) How the intended use of the official seal(s) and/or logo(s) is connected to your work with NARA on an event or activity (example: requesting to use the official NARA seal(s) and/or logo(s) on a program brochure, poster, or other publicity announcing a co-sponsored symposium or conference.); and

(4) The dates of the event or activity for which you intend to display the seal(s) and/or logo(s).

(b) You must submit the request at least six weeks before you intend to use it to the Archivist of the United States (N), 8601 Adelphi Rd., College Park, MD 20740–6001.

(c) The OMB control number 3095–0052 has been assigned to the information collection contained in this section.

[67 FR 72101, Dec. 4, 2002, as amended at 69 FR 26051, May 11, 2004]

### § 1200.10 What are NARA's criteria for approval?

NARA's criteria for approval are as follows:

(a) NARA must be participating in the event or activity by providing speakers, space, or other similar services (example: NARA co-sponsoring a symposium or conference).

(b) Seals and logos will not be used on any article or in any manner that reflects unfavorably on NARA or endorses, either directly or by implication, commercial products or services, or a requestor's policies or activities.

[67 FR 72101, Dec. 4, 2002, as amended at 69 FR 26051, May 11, 2004]

### § 1200.12 How does NARA notify me of the determination?

NARA will notify you by mail of the final decision, usually within 3 weeks from the date we receive your request. If NARA approves your request, we will send you a camera-ready copy of the official seal(s) and/or logo(s) along with an approval letter that will:

(a) Reference back to the submitted request (either through the date or another distinguishing characteristic) indicating approval of the specific use, as defined in the request; and

(b) Include NARA's conditions for use, which are identified in § 1200.14.

[67 FR 72101, Dec. 4, 2002, as amended at 69 FR 26051, May 11, 2004]

### § 1200.14 What are NARA's conditions for the use of the official seals and logos?

If your request is approved, you must follow these conditions:

(a) Use the official seals and/or logos only for the specific purpose for which approval was granted;

(b) Submit additional written requests for any uses other than the use granted in the approval letter;

(c) Do not delegate the approval to another individual(s) or organization without NARA's prior approval; and

(d) Do not change the official seals and/or logos themselves. They must visually and physically appear as NARA originally designed them, with no alterations.

(e) Only use the official seal(s) and/or logo(s) for the time period designated in the approval letter (example: for the duration of a conference or exhibit).

[67 FR 72101, Dec. 4, 2002, as amended at 69 FR 26051, May 11, 2004]

## Subpart D—Penalties for Misuse of NARA Seals and Logos

### § 1200.16 Will I be penalized for misusing the official seals and logos?

(a) *Seals.* (1) If you falsely make, forge, counterfeit, mutilate, or alter official seals, replicas, reproductions or embossing seals, or knowingly use or possess with fraudulent intent any altered seal, you are subject to penalties under 18 U.S.C. 506.

(2) If you use the official seals, replicas, reproductions, or embossing seals in a manner inconsistent with the provisions of this part, you are subject to penalties under 18 U.S.C. 1017 and to other provisions of law as applicable.

(b) *Logos.* If you use the official logos, replicas or reproductions, of logos in a manner inconsistent with the provisions of this part, you are subject to penalties under 18 U.S.C. 701.

[69 FR 26051, May 11, 2004]

# PART 1201—COLLECTION OF CLAIMS

## Subpart A—Introduction

Sec.
1201.1 Why is NARA issuing these regulations?
1201.2 Under what authority does NARA issue these regulations?
1201.3 What definitions apply to the regulations in this part?
1201.4 What types of claims are excluded from these regulations?
1201.5 If a claim is not excluded from these regulations, may it be compromised, suspended, terminated, or waived?
1201.6 What is a claim or debt?
1201.7 Why does NARA have to collect debts?
1201.8 What action might NARA take to collect debts?
1201.9 What rights do I have as a debtor?

## Subpart B—General Provisions

1201.10 Will NARA use a cross-servicing agreement with the Department of the Treasury to collect its claims?
1201.11 Will NARA refer claims to the Department of Justice?
1201.12 Will NARA provide information to credit reporting agencies?
1201.13 How will NARA contract for collection services?
1201.14 What should I expect to receive from NARA if I owe a debt to NARA?
1201.15 What will the notice tell me regarding collection actions that might be taken if the debt is not paid within 60 days of the notice, or arrangements to pay the debt are not made within 60 days of the notice?
1201.16 What will the notice tell me about my opportunity for review of my debt?
1201.17 What must I do to obtain a review of my debt, and how will the review process work?
1201.18 What interest, penalty charges, and administrative costs will I have to pay on a debt owed to NARA?

1201.19 How can I resolve my debt through voluntary repayment?
1201.20 What is the extent of the Archivist's authority to compromise debts owed to NARA, or to suspend or terminate collection action on such debts?
1201.21 May NARA's failure to comply with these regulations be used as a defense to a debt?

Subpart C—Salary Offset

1201.30 What debts are included or excluded from coverage of these regulations on salary offset?
1201.31 May I ask NARA to waive an overpayment that otherwise would be collected by offsetting my salary as a Federal employee?
1201.32 What are NARA's procedures for salary offset?
1201.33 How will NARA coordinate salary offsets with other agencies?
1201.34 Under what conditions will NARA make a refund of amounts collected by salary offset?
1201.35 Will the collection of a claim by salary offset act as a waiver of my rights to dispute the claimed debt?

Subpart D—Tax Refund Offset

1201.40 Which debts can NARA refer to the Department of the Treasury for collection by offsetting tax refunds?
1201.41 What are NARA's procedures for collecting debts by tax refund offset?

Subpart E—Administrative Offset

1201.50 Under what circumstances will NARA collect amounts that I owe to NARA (or some other Federal agency) by offsetting the debt against payments that NARA (or some other Federal agency) owes me?
1201.51 How will NARA request that my debt to NARA be collected by offset against some payment that another Federal agency owes me?
1201.52 What procedures will NARA use to collect amounts I owe to a Federal agency by offsetting a payment that NARA would otherwise make to me?
1201.53 When may NARA make an offset in an expedited manner?
1201.54 Can a judgment I have obtained against the United States be used to satisfy a debt that I owe to NARA?

Subpart F—Administrative Wage Garnishment

1201.55 How will NARA collect debts through Administrative Wage Garnishment?

AUTHORITY: 5 U.S.C. 5514; 31 U.S.C. 3701–3720A, 3720D; 44 U.S.C. 2104(a).

SOURCE: 67 FR 44757, July 5, 2002, unless otherwise noted.

## Subpart A—Introduction

### § 1201.1 Why is NARA issuing these regulations?

(a) NARA is issuing these regulations to inform the public of procedures that may be used by NARA for the collection of debt.

(b) These regulations provide that NARA will attempt to collect debts owed to it or other Government agencies either directly, or by other means including salary, administrative, tax refund offsets, or administrative wage garnishment.

(c) These regulations also provide that NARA may enter a cross-servicing agreement with the U.S. Department of the Treasury (Treasury) under which the Treasury will take authorized action to collect amounts owed to NARA.

### § 1201.2 Under what authority does NARA issue these regulations?

(a) NARA is issuing the regulations in this part under the authority of 31 U.S.C. Chapter 37, 3701–3720A and 3720D. These sections implement the requirements of the Federal Claims Collection Act of 1966, as amended by the Debt Collection Act of 1982 and the Debt Collection Improvement Act of 1996.

(b) NARA is also issuing the regulations in this part to conform to the Federal Claims Collection Standards (FCCS), which prescribe standards for handling the Federal Government's claims for money or property. The FCCS are issued by the Department of Justice (DOJ) and the Treasury at 31 CFR Chapter IX, Parts 900–904. NARA adopts those standards without change. The regulations in this part supplement the FCCS by prescribing procedures necessary and appropriate for NARA operations.

(c) NARA is also issuing the regulations in this part to conform to the standards for handling Administrative Wage Garnishment processing by the Federal Government. The standards are issued by the Treasury at 31 CFR 285.11. NARA adopts those standards without change. The regulations in

this part supplement the standards by prescribing procedures necessary and appropriate for NARA operations.

(d) NARA is further issuing the regulations in this part under the authority of 5 U.S.C. 5514, and the salary offset regulations published by the Office of Personnel and Management at 5 CFR part 550, subpart K.

(e) All of these claims collection regulations are issued under NARA's authority under 44 U.S.C. 2104(a).

### § 1201.3 What definitions apply to the regulations in this part?

As used in this part:

*Administrative offset* means withholding funds payable by the United States (including funds payable by the United States on behalf of a State government) to, or held by the United States for, a person to satisfy a claim.

*Administrative Wage Garnishment* means a process whereby a Federal agency may, without first obtaining a court order, order an employer to withhold up to 15 percent of your wages for payment to the Federal agency to satisfy a delinquent non-tax debt.

*Agency* means a department, agency, court, court administrative office, or instrumentality in the executive, judicial, or legislative branch of government, including a government corporation.

*Archivist* means the Archivist of the United States, or his or her designee.

*Certification* means a written statement received by a paying agency or disbursing official from a creditor agency that requests the paying agency or disbursing official to offset the salary of an employee and specifies that required procedural protections have been afforded the employee.

*Claim* (*see* definition of debt in this section).

*Compromise* means the settlement or forgiveness of a debt.

*Creditor agency* means the agency to which the debt is owed, including a debt collection center when acting on behalf of the creditor agency.

*Day* means calendar day. To count days, include the last day of the period unless it is a Saturday, a Sunday, or a Federal legal holiday.

*Debt collection center* means the Treasury or any other agency or division designated by the Secretary of the Treasury with authority to collect debts on behalf of creditor agencies.

*Debt* and *claim* are deemed synonymous and interchangeable. These terms mean an amount of money, funds, or property that has been determined by an agency official to be due the United States from any person, organization, or entity except another Federal agency. For the purpose of administrative offset under 31 U.S.C. 3716 and subpart E of these regulations, the terms, ''debt'' and ''claim'' also include money, funds or property owed by a person to a State (including past-due support being enforced by a State); the District of Columbia; American Samoa; Guam; the United States Virgin Islands; the Commonwealth of the Northern Marina Islands; or the Commonwealth of Puerto Rico.

*Debtor* means a person, organization, or entity, except another Federal agency, who owes a debt. Use of the terms ''I,'' ''you,'' ''me,'' and similar references to the reader of the regulations in this part are meant to apply to debtors as defined in this paragraph.

*Delinquent debt* means a debt that has not been paid by the date specified in NARA's initial written demand for payment or applicable agreement or instrument (including a post-delinquency payment agreement), unless other satisfactory payment arrangements have been made.

*Disposable pay* means the part of an employee's pay that remains after deductions that are required to be withheld by law have been made.

*Employee* means a current employee of an agency, including a current member of the Armed Forces or Reserve of the Armed Forces of the United States.

*Federal Claims Collection Standards (FCCS)* means the standards currently published by DOJ and the Treasury at 31 CFR parts 900–904.

*NARA* means the National Archives and Records Administration.

*Paying agency* means any agency that is making payments of any kind to a debtor. In some cases, NARA may be both the creditor agency and the paying agency.

*Payroll office* means the office that is primarily responsible for payroll records and the coordination of pay

matters with the appropriate personnel office.

*Person* includes a natural person or persons, profit or non-profit corporation, partnership, association, trust, estate, consortium, state or local government, or other entity that is capable of owing a debt to the United States; however, agencies of the United States are excluded.

*Private collection contractor* means a private debt collector under contract with an agency to collect a non-tax debt owed to the United States.

*Salary offset* means a payroll procedure to collect a debt under 5 U.S.C. 5514 and 31 U.S.C. 3716 by deduction(s) at one or more officially established pay intervals from the current pay account of an employee, without his or her consent.

*Tax refund offset* means the reduction of a tax refund by the amount of a past-due legally enforceable debt owed to NARA or any other Federal agency.

*Waiver* means the cancellation, remission, forgiveness, or non-recovery of a debt.

*Withholding order* means any order for withholding or garnishment of pay issued by an agency, or judicial or administrative body.

### § 1201.4 What types of claims are excluded from these regulations?

The following types of claims are excluded:

(a) Debts or claims arising under the Internal Revenue Code (26 U.S.C. 1 *et seq.*) or the tariff laws of the United States, or the Social Security Act (42 U.S.C. 301 *et seq.*); except as provided under sec. 204(f) and 1631 (42 U.S.C. 404(f) and 1383(b)(4)(A)).

(b) Any case to which the Contract Disputes Act (41 U.S.C. 601 *et seq.*) applies;

(c) Any case where collection of a debt is explicitly provided for or provided by another statute, e.g., travel advances under 5 U.S.C. 5705 and employee training expenses under 5 U.S.C. 4108, or, as provided for by title 11 of the United States Code, when the claims involve bankruptcy;

(d) Any debt based in whole or in part on conduct in violation of the antitrust laws or involving fraud, the presentation of a false claim, or misrepresentation on the part of the debtor or any party having an interest in the claim, as described in the FCCS, unless DOJ authorizes NARA to handle the collection;

(e) Claims between Federal agencies;

(f) Unless otherwise provided by law, administrative offset of payments under the authority of 31 U.S.C. 3716 to collect a debt may not be initiated more than 10 years after the Government's right to collect the debt first accrued. (Exception: The 10-year limit does not apply if facts material to the Federal Government's right to collect the debt were not known and could not reasonably have been known by the official or officials of the Government who were charged with the responsibility to discover and collect such debts.) The 10-year limitation also does not apply to debts reduced to a judgement; and

(g) Unless otherwise stated, claims which have been transferred to Treasury or referred to the Department of Justice will be collected in accordance with the procedures of those agencies.

### § 1201.5 If a claim is not excluded from these regulations, may it be compromised, suspended, terminated, or waived?

Nothing in this part precludes:

(a) The compromise, suspension, or termination of collection actions, where appropriate under the FCCS, or the use of alternative dispute resolution methods if they are consistent with applicable law and regulations.

(b) An employee from requesting waiver of an erroneous payment under 5 U.S.C. 5584, 10 U.S.C. 2774, or 32 U.S.C. 716, or from questioning the amount or validity of a debt, in the manner set forth in this part.

### § 1201.6 What is a claim or debt?

A claim or debt is an amount of money, funds, or property that has been determined by an agency official to be due the United States from any person, organization, or entity except another Federal agency (*see* § 1201.3).

### § 1201.7 Why does NARA have to collect debts?

Federal agencies are required to try to collect claims of the Federal Government for money, funds, or property arising out of the agency's activities.

### § 1201.8 What action might NARA take to collect debts?

(a) There are a number of actions that NARA is permitted to take when attempting to collect debts. These actions include:

(1) Salary, tax refund or administrative offset, or administrative wage garnishment (*see* subparts C, D, E, and F of this part respectively); or

(2) Using the services of private collection contractors.

(b) In certain instances, usually after collection efforts have proven unsuccessful, NARA transfers debts to the Treasury for collection or refers them to the DOJ for litigation (*see* §§ 1201.10 and 1201.11).

### § 1201.9 What rights do I have as a debtor?

As a debtor you have several basic rights. You have a right to:

(a) Notice as set forth in these regulations (*see* § 1201.14);

(b) Inspect the records that NARA has used to determine that you owe a debt (*see* § 1201.14);

(c) Request review of the debt and possible payment options (*see* § 1201.17);

(d) Propose a voluntary repayment agreement (*see* § 1201.19); and/or

(e) Question if the debt is excluded from these regulations (*see* § 1201.5(b)).

## Subpart B—General Provisions.

### § 1201.10 Will NARA use a cross-servicing agreement with the Department of the Treasury to collect its claims?

(a) NARA may enter into a cross-servicing agreement that authorizes the Treasury to take the collection actions described in this part on behalf of NARA. This agreement will describe procedures that the Treasury uses to collect debts. The debt collection procedures that the Treasury uses are based on 31 U.S.C. chapter 37.

(b) NARA must transfer to the Treasury any debt that has been delinquent for a period of 180 days or more so that the Secretary of the Treasury may take appropriate action to collect the debt or terminate collection action. NARA may also transfer to the Treasury any debt that is less than 180 days delinquent.

(c) Paragraph (b) of this section will not apply to any debt or claim that:

(1) Is in litigation or foreclosure;

(2) Will be disposed of under an approved asset sales program;

(3) Has been referred to a private collection contractor for collection for a period of time acceptable to the Secretary of the Treasury;

(4) Is at a debt collection center for a period of time acceptable to the Secretary of the Treasury;

(5) Will be collected under internal offset procedures within 3 years after the date the debt or claim is first delinquent; or

(6) Is exempt from this requirement based on a determination by the Secretary of the Treasury.

### § 1201.11 Will NARA refer claims to the Department of Justice?

NARA will refer to DOJ for litigation claims on which aggressive collection actions have been taken, but which could not be collected, compromised, suspended, or terminated. Referrals will be made as early as possible, consistent with aggressive NARA collection action, and within the period for bringing a timely suit against the debtor.

### § 1201.12 Will NARA provide information to credit reporting agencies?

(a) NARA will report certain delinquent debts to appropriate consumer credit reporting agencies by providing the following information:

(1) A statement that the debt is valid and overdue;

(2) The name, address, taxpayer identification number, and any other information necessary to establish the identity of the debtor;

(3) The amount, status, and history of the debt; and

(4) The program or pertinent activity under which the debt arose.

(b) Before disclosing debt information to a credit reporting agency, NARA:

(1) Takes reasonable action to locate the debtor if a current address is not available;

(2) Provides the notice required under § 1201.14 if a current address is available; and

(3) Obtains satisfactory assurances from the credit reporting agency that it complies with the Fair Credit Reporting Act (15 U.S.C. 1681 *et seq.*) and other Federal laws governing the provision of credit information.

(c) At the time debt information is submitted to a credit reporting agency, NARA provides a written statement to the reporting agency that all required actions have been taken. In addition, NARA thereafter ensures that the credit reporting agency is promptly informed of any substantive change in the conditions or amount of the debt, and promptly verifies or corrects information relevant to the debt.

(d) If a debtor disputes the validity of the debt, the credit reporting agency refers the matter to the appropriate NARA official. The credit reporting agency excludes the debt from its reports until NARA certifies in writing that the debt is valid.

(e) NARA may disclose to a commercial credit bureau information concerning a commercial debt, including the following:

(1) Information necessary to establish the name, address, and employer identification number of the commercial debtor;

(2) The amount, status, and history of the debt; and

(3) The program or pertinent activity under which the debt arose.

### § 1201.13 How will NARA contract for collection services?

NARA uses the services of a private collection contractor where it determines that such use is in NARA's best interest. When NARA determines that there is a need to contract for collection services, NARA:

(a) Retains sole authority to:

(1) Resolve any dispute with the debtor regarding the validity of the debt;

(2) Compromise the debt;

(3) Suspend or terminate collection action;

(4) Refer the debt to the DOJ for litigation; and

(5) Take any other action under this part;

(b) Requires the contractor to comply with the:

(1) Privacy Act of 1974, as amended, to the extent specified in 5 U.S.C. 552a(m);

(2) Fair Debt Collection Practices Act (15 U.S.C. 1692–1692o); and

(3) Other applicable Federal and State laws pertaining to debt collection practices and applicable regulations of NARA in this part;

(c) Requires the contractor to account accurately and fully for all amounts collected; and

(d) Requires the contractor to provide to NARA, upon request, all data and reports contained in its files related to its collection actions on a debt.

### § 1201.14 What should I expect to receive from NARA if I owe a debt to NARA?

(a) NARA will send you a written notice when we determine that you owe a debt to NARA. The notice will be hand-delivered or sent to you at the most current address known to NARA. The notice will inform you of the following:

(1) The amount, nature, and basis of the debt;

(2) That a designated NARA official has reviewed the claim and determined that it is valid;

(3) That payment of the debt is due as of the date of the notice, and that the debt will be considered delinquent if you do not pay it within 30 days of the date of the notice;

(4) NARA's policy concerning interest, penalty charges, and administrative costs (*see* § 1201.18), including a statement that such assessments must be made against you unless excused in accordance with the FCCS and this part;

(5) That you have the right to inspect and copy disclosable NARA records pertaining to your debt, or to receive copies of those records if personal inspection is impractical;

(6) That you have the opportunity to enter into an agreement, in writing and signed by both you and the designated NARA official, for voluntary repayment of the debt (*see* § 1201.19);

(7) The address, telephone number, and name of the NARA official available to discuss the debt;

(8) Possible collection actions that might be taken if the debt is not paid within 60 days of the notice, or arrangements to pay the debt are not made within 60 days of the notice (*see* § 1201.15 for a fuller description of possible actions);

(9) That NARA may suspend or revoke any licenses, permits, or other privileges for failure to pay a debt; and

(10) Information on your opportunity to obtain a review of the debt (*see* § 1201.16).

(b) NARA will respond promptly to communications from you.

(c) Exception to entitlement to notice, hearing, written responses, and final decisions. With respect to the regulations covering internal salary offset collections (*see* § 1230.32), NARA excepts from the provisions of paragraph (a) of this section—

(1) Any adjustment to pay arising out of an employee's election of coverage or a change in coverage under a Federal benefits program requiring periodic deductions from pay, if the amount to be recovered was accumulated over 4 pay periods or less;

(2) A routine intra-agency adjustment of pay that is made to correct an overpayment of pay attributable to clerical or administrative errors or delays in processing pay documents, if the overpayment occurred within the 4 pay periods preceding the adjustment and, at the time of such adjustment, or as soon thereafter as practical, the individual is provided written notice of the nature and the amount of the adjustment and point of contact for contesting such adjustment; or

(3) Any adjustment to collect a debt amounting to $50 or less, if, at the time of such adjustment, or as soon thereafter as practical, the individual is provided written notice of the nature and the amount of the adjustment and a point of contact for contesting such adjustment.

### § 1201.15 What will the notice tell me regarding collection actions that might be taken if the debt is not paid within 60 days of the notice, or arrangements to pay the debt are not made within 60 days of the notice?

The notice provided under § 1201.14 will advise you that within 60 days of the date of the notice, your debt (including any interest, penalty charges, and administrative costs) must be paid or you must enter into a voluntary repayment agreement. If you do not pay the debt or enter into the agreement within that deadline, NARA may enforce collection of the debt by any or all of the following methods:

(a) By referral to a credit reporting agency (*see* § 1201.12), private collection contractor (*see* § 1201.13), or the DOJ (*see* § 1201.11).

(b) By transferring any debt to the Treasury for collection, including under a cross-servicing agreement with the Treasury (*see* § 1201.10).

(c) If you are a NARA employee, by deducting money from your disposable pay account until the debt (and all accumulated interest, penalty charges, and administrative costs) is paid in full (*see* subpart C of this part). NARA will specify the amount, frequency, approximate beginning date, and duration of the deduction. 5 U.S.C. 5514 and 31 U.S.C. 3716 govern such proceedings;

(d) If you are an employee of a Federal agency other than NARA, by initiating certification procedures to implement a salary offset by that Federal agency (*see* subpart C of this part). 5 U.S.C. 5514 governs such proceedings;

(e) By referring the debt to the Treasury for offset against any refund of overpayment of tax (*see* subpart D of this part);

(f) By administrative offset (*see* subpart E of this part);

(g) By administrative wage garnishment (*see* subpart F of this part); or

(h) By liquidation of security or collateral. NARA has the right to hold security or collateral, liquidate it, and apply the proceeds to your debt through the exercise of a power of sale in the security instrument or a foreclosure. NARA will not follow the procedures in this paragraph (h) if the cost

of disposing the collateral will be disproportionate to its value.

### § 1201.16 What will the notice tell me about my opportunity for review of my debt?

The notice provided by NARA under §§ 1201.14 and 1201.15 will also advise you of the opportunity to obtain a review within NARA concerning the existence or amount of the debt or the proposed schedule for offset of Federal employee salary payments. The notice will also advise you of the following:

(a) The name, address, and telephone number of a NARA official whom you may contact concerning procedures for requesting a review;

(b) The method and time period for requesting a review;

(c) That the filing of a request for a review on or before the 60th day following the date of the notice will stay the commencement of collection proceedings;

(d) The name and address of the NARA official to whom you should send the request for a review;

(e) That a final decision on the review (if one is requested) will be issued in writing at the earliest practical date, but not later than 60 days after the receipt of the request for a review, unless you request, and the review official grants, a delay in the proceedings;

(f) That any knowingly false or frivolous statements, representations, or evidence may subject you to:

(1) Disciplinary procedures appropriate under 5 U.S.C. Chapter 75, 5 CFR part 752, or any other applicable statute or regulations;

(2) Penalties under the False Claims Act (31 U.S.C. 3729–3733) or any other applicable statutory authority; and

(3) Criminal penalties under 18 U.S.C. 286, 287, 1001, and 1002, or any other applicable statutory authority;

(g) Any other rights available to you to dispute the validity of the debt or to have recovery of the debt waived, or remedies available to you under statutes or regulations governing the program for which the collection is being made; and

(h) That unless there are applicable contractual or statutory provisions to the contrary, amounts paid on or deducted for the debt that are later waived or found not owed will be promptly refunded to you.

### § 1201.17 What must I do to obtain a review of my debt, and how will the review process work?

(a) *Request for review.* (1) You have the right to request a review by NARA of the existence or amount of your debt, the proposed schedule for offset of Federal employee salary payments, or whether the debt is past due or legally enforceable. If you want a review, you must send a written request to the NARA official designated in the notice (*see* § 1201.16(d)).

(2) You must sign your request for review and fully identify and explain with reasonable specificity all the facts, evidence, and witnesses that support your position. Your request for review should be accompanied by available evidence to support your contentions.

(3) Your request for review must be received by the designated officer or employee of NARA on or before the 60th calendar day following the date of the notice. Timely filing will stay the commencement of collection procedures. NARA may consider requests filed after the 60-day period provided for in this section if you:

(i) Can show that the delay was the result of circumstances beyond your control; or

(ii) Did not receive notice of the filing deadline (unless you had actual notice of the filing deadline).

(b) *Inspection of NARA records related to the debt.* (1) If you want to inspect or copy NARA records related to the debt (*see* § 1201.14(a)(5)), you must send a letter to the NARA official designated in the notice. Your letter must be received within 30 days of the date of the notice.

(2) In response to the timely request described in paragraph (b)(1) of this section, the designated NARA official will notify you of the location and time when you may inspect and copy records related to the debt.

(3) If personal inspection of NARA records related to the debt is impractical, reasonable arrangements will be made to send you copies of those records.

(c) *Review official.* (1) When required by Federal law or regulation, such as in a salary offset situation, NARA will request an administrative law judge, or hearing official from another agency who is not under the supervision or control of the Archivist, to conduct the review. In these cases, the hearing official will, following the review, submit the review decision to the Archivist for the issuance of NARA's final decision (*see* paragraph (f) of this section for content of the review decision).

(2) When Federal law or regulation does not require NARA to have the review conducted by an administrative law judge, or by a hearing official from another agency who is not under the supervision or control of the Archivist, NARA has the right to appoint a hearing official to conduct the review. In these cases, the hearing official will, following the review, submit the review decision to the Archivist for the issuance of NARA's final decision (*see* paragraph (f) of this section for the content of the review decision).

(d) *Review procedure.* If you request a review, the review official will notify you of the form of the review to be provided. The review official will determine whether an oral hearing is required, or if a review of the written record is sufficient, in accordance with the FCCS. Although you may request an oral hearing, such a hearing is required only when a review of the documentary evidence cannot determine the question of indebtedness, such as when the validity of the debt turns on an issue of credibility or truthfulness. In either case, the review official will conduct the review in accordance with the FCCS. If the review will include an oral hearing, the notice sent to you by the review official will set forth the date, time, and location of the hearing.

(e) *Date of decision.* (1) The review official will issue a written decision, based upon either the written record or documentary evidence and information developed at an oral hearing. This decision will be issued as soon as practical, but not later than 60 days after the date on which NARA received your request for a review, unless you request, and the review official grants, a delay in the proceedings.

(2) If NARA is unable to issue a decision within 60 days after the receipt of the request for a hearing:

(i) NARA may not issue a withholding order or take other action until the hearing (in whatever form) is held and a decision is rendered; and

(ii) If NARA previously issued a withholding order to the debtor's employer, NARA must suspend the withholding order beginning on the 61st day after the receipt of the hearing request and continuing until a hearing (in whatever form) is held and a decision is rendered.

(f) *Content of review decision.* The review official will prepare a written decision that includes:

(1) A statement of the facts presented to support the origin, nature, and amount of the debt;

(2) The review official's findings, analysis, and conclusions; and

(3) The terms of any repayment schedule, if applicable.

(g) *Interest, penalty charge, and administrative cost accrual during review period.* Interest, penalty charges, and administrative costs authorized by law will continue to accrue during the review period.

### § 1201.18 What interest, penalty charges, and administrative costs will I have to pay on a debt owed to NARA?

(a) *Interest.* (1) NARA will assess interest on all delinquent debts unless prohibited by statute, regulation, or contract.

(2) Interest begins to accrue on all debts from the date that the debt becomes delinquent. NARA will not recover interest if you pay the debt within 30 days of the date on which interest begins to accrue. NARA will assess interest at the rate established annually by the Secretary of the Treasury under 31 U.S.C. 3717, unless a different rate is either necessary to protect the interests of NARA or established by a contract, repayment agreement, or statute. NARA will notify you of the basis for its finding when a different rate is necessary to protect the interests of NARA.

(3) The Archivist may extend the 30-day period for payment without interest where he or she determines that such action is in the best interest of

NARA. A decision to extend or not to extend the payment period is final and is not subject to further review.

(b) *Penalty*. NARA will assess a penalty charge of 6 percent a year on any portion of a debt that is delinquent for more than 90 days.

(c) *Administrative costs*. NARA will assess charges to cover administrative costs incurred as a result of your failure to pay a debt before it becomes delinquent. Administrative costs include the additional costs incurred in processing and handling the debt because it became delinquent, such as costs incurred in obtaining a credit report or in using a private collection contractor, or service fees charged by a Federal agency for collection activities undertaken on behalf of NARA.

(d) *Allocation of payments*. A partial or installment payment by a debtor will be applied first to outstanding penalty assessments, second to administrative costs, third to accrued interest, and fourth to the outstanding debt principal.

(e) *Additional authority*. NARA may assess interest, penalty charges, and administrative costs on debts that are not subject to 31 U.S.C. 3717 to the extent authorized under common law or other applicable statutory authority.

(f) *Waiver*. (1) The Archivist may (without regard to the amount of the debt) waive collection of all or part of accrued interest, penalty charges, or administrative costs, if he or she determines that collection of these charges would be against equity and good conscience or not in the best interest of NARA.

(2) A decision to waive interest, penalty charges, or administrative costs may be made at any time before a debt is paid. However, and unless otherwise stated in these regulations, where these charges have been collected before the waiver decision, they will not be refunded. The Archivist's decision to waive or not waive collection of these charges is final and is not subject to further review.

### § 1201.19 How can I resolve my debt through voluntary repayment?

(a) In response to a notice of debt, you may propose to NARA that you be allowed to repay the debt through a voluntary repayment agreement in lieu of NARA taking other collection actions under this part.

(b) Your request to enter into a voluntary repayment agreement must:

(1) Be in writing;

(2) Admit the existence of the debt; and

(3) Either propose payment of the debt (together with interest, penalty charges, and administrative costs) in a lump sum, or set forth a proposed repayment schedule.

(c) NARA will collect claims in one lump sum whenever feasible. However, if you are unable to pay your debt in one lump sum, NARA may accept payment in regular installments that bear a reasonable relationship to the size of the debt and your ability to pay.

(d) NARA will consider a request to enter into a voluntary repayment agreement in accordance with the FCCS. The Archivist may request additional information from you, including financial statements if you request to make payments in installments, in order to determine whether to accept a voluntary repayment agreement. It is within the Archivist's discretion to accept a repayment agreement instead of proceeding with other collection actions under this part, and to set the necessary terms of any voluntary repayment agreement. No repayment agreement will be binding on NARA unless it is in writing and signed by both you and the Archivist. At NARA's option, you may be required to provide security as part of the agreement to make payments in installments. Notwithstanding the provisions of this section, 31 U.S.C. 3711 will govern any reduction or compromise of a claim.

### § 1201.20 What is the extent of the Archivist's authority to compromise debts owed to NARA, or to suspend or terminate collection action on such debts?

(a) The Archivist may compromise, suspend, or terminate collection action on those debts owed to NARA that do not exceed $100,000 excluding interest, in conformity with the Federal Claims Collection Act of 1966, as amended. NARA will follow the policies in § 902.2 of the FCCS.

(b) The uncollected portion of a debt owed to NARA that is not recovered as

the result of a compromise will be reported to the Internal Revenue Service (IRS) as income to the debtor in accordance with IRS procedures if the debt is at least $600.00.

### § 1201.21 May NARA's failure to comply with these regulations be used as a defense to a debt?

No, the failure of NARA to comply with any standard in the FCCS or these regulations will not be available to any debtor as a defense.

## Subpart C—Salary Offset

### § 1201.30 What debts are included or excluded from coverage of these regulations on salary offset?

(a) The regulations in this subpart provide NARA procedures for the collection by salary offset of a Federal employee's pay to satisfy certain debts owed to NARA or to other Federal agencies.

(b) The regulations in this subpart do not apply to any case where collection of a debt by salary offset is explicitly provided for or prohibited by another statute.

(c) Nothing in the regulations in this subpart precludes the compromise, suspension, or termination of collection actions under the Federal Claims Collection Act of 1966, as amended, or the FCCS.

(d) A levy imposed under the Internal Revenue Code takes precedence over a salary offset under this subpart, as provided in 5 U.S.C. 5514(d).

### § 1201.31 May I ask NARA to waive an overpayment that otherwise would be collected by offsetting my salary as a Federal employee?

Yes, the regulations in this subpart do not preclude you from requesting waiver of an overpayment under 5 U.S.C. 5584 or 8346(b), 10 U.S.C. 2774, 32 U.S.C. 716, or other statutory provisions pertaining to the particular debts being collected.

### § 1201.32 What are NARA's procedures for salary offset?

(a) NARA will coordinate salary deductions under this subpart as appropriate.

(b) If you are a NARA employee who owes a debt to NARA, NARA's payroll office will determine the amount of your disposable pay and will implement the salary offset.

(c) Deductions will begin within three official pay periods following receipt by NARA's payroll office of certification of debt from the creditor agency.

(d) The Notice provisions of these regulations do not apply to certain debts arising under this section (*see* § 1201.14(c)).

(e) Types of collection. (1) *Lump-sum offset*. If the amount of the debt is equal to or less than 15 percent of disposable pay, the debt generally will be collected through one lump-sum offset.

(2) *Installment deductions*. Installment deductions will be made over a period not greater than the anticipated period of employment. The size and frequency of installment deductions will bear a reasonable relation to the size of the debt and your ability to pay. However, the amount deducted from any period will not exceed 15 percent of the disposable pay from which the deduction is made unless you have agreed in writing to the deduction of a greater amount. If possible, installment payments will be sufficient in size and frequency to liquidate the debt in three years or less.

(3) *Deductions from final check*. A deduction exceeding the 15 percent of disposable pay limitation may be made from any final salary payment under 31 U.S.C. 3716 and the FCCS in order to liquidate the debt, whether the employee is being separated voluntarily or involuntarily.

(4) *Deductions from other sources*. If an employee subject to salary offset is separated from NARA and the balance of the debt cannot be liquidated by offset of the final salary check, NARA may offset later payments of any kind against the balance of the debt, as allowed by 31 U.S.C. 3716 and the FCCS.

(f) *Multiple debts*. In instances where two or more creditor agencies are seeking salary offsets, or where two or more debts are owed to a single creditor agency, NARA's payroll office may, at its discretion, determine whether one or more debts should be

offset simultaneously within the 15 percent limitation.

### § 1201.33 How will NARA coordinate salary offsets with other agencies?

(a) *Responsibilities of NARA as the creditor agency (i.e. when the debtor owes a debt to NARA and is an employee of another agency).* Upon completion of the procedures established in this subpart and pursuant to 5 U.S.C. 5514 and 31 U.S.C. 3716, NARA must submit a claim to a paying agency or disbursing official.

(1) In its claim, NARA must certify, in writing, the following:

(i) That the employee owes the debt;

(ii) The amount and basis of the debt;

(iii) The date NARA's right to collect the debt first accrued;

(iv) That NARA's regulations in this subpart have been approved by OPM under 5 CFR part 550, subpart K; and

(v) That NARA has met the certification requirements of the paying agency.

(2) If the collection must be made in installments, NARA's claim will also advise the paying agency of the amount or percentage of disposable pay to be collected in each installment. NARA may also advise the paying agency of the number of installments to be collected and the date of the first installment, if that date is other than the next officially established pay period.

(3) NARA will also include in its claim:

(i) The employee's written consent to the salary offset;

(ii) The employee's signed statement acknowledging receipt of the procedures required by 5 U.S.C. 5514; or

(iii) Information regarding the completion of procedures required by 5 U.S.C. 5514, including the actions taken and the dates of those actions.

(4) If the employee is in the process of separating and has not received a final salary check or other final payment(s) from the paying agency, NARA must submit its claim to the paying agency or disbursing official for collection under 31 U.S.C. 3716. The paying agency will (under its regulations adopted under 5 U.S.C. 5514 and 5 CFR part 550, subpart K), certify the total amount of its collection on the debt and notify the employee and NARA. If the paying agency's collection does not fully satisfy the debt, and the paying agency is aware that the debtor is entitled to payments from the Civil Service Retirement and Disability Fund or other similar payments that may be due the debtor employee from other Federal government sources, then (under its regulations adopted under 5 U.S.C. 5514 and 5 CFR part 550, subpart K), the paying agency will provide written notice of the outstanding debt to the agency responsible for making the other payments to the debtor employee. The written notice will state that the employee owes a debt, the amount of the debt, and that the provisions of this section have been fully complied with. However, NARA must submit a properly certified claim under this paragraph (a)(4) to the agency responsible for making the other payments before the collection can be made.

(5) If the employee is already separated and all payments due from his or her former paying agency have been paid, NARA may request, unless otherwise prohibited, that money due and payable to the employee from the Civil Service Retirement and Disability Fund or other similar funds be administratively offset to collect the debt.

(6) *Employee transfer.* When an employee transfers from one paying agency to another paying agency, NARA will not repeat the due process procedures described in 5 U.S.C. 5514 and this subpart to resume the collection. NARA will submit a properly certified claim to the new paying agency and will subsequently review the debt to ensure that the collection is resumed by the new paying agency.

(b) *Responsibilities of NARA as the paying agency (i.e. when the debtor owes a debt to another agency and is an employee of NARA).* (1) Complete claim. When NARA receives a certified claim from a creditor agency (under the creditor agency's regulations adopted under 5 U.S.C. 5514 and 5 CFR part 550, subpart K), deductions should be scheduled to begin within three officially established pay intervals. Before deductions can begin, NARA sends the employee a written notice containing:

(i) A statement that NARA has received a certified claim from the creditor agency;

(ii) The amount of the claim;

(iii) The date salary offset deductions will begin; and

(iv) The amount of such deductions.

(2) Incomplete claim. When NARA receives an incomplete certification of debt from a creditor agency, NARA will return the claim with a notice that the creditor agency must:

(i) Comply with the procedures required under 5 U.S.C. 5514 and 5 CFR part 550, subpart K, and

(ii) Properly certify a claim to NARA before NARA will take action to collect from the employee's current pay account.

(3) NARA is not authorized to review the merits of the creditor agency's determination with respect to the amount or validity of the debt certified by the creditor agency.

(4) Employees who transfer from NARA to another paying agency. If, after the creditor agency has submitted the claim to NARA, the employee transfers from NARA to a different paying agency before the debt is collected in full, NARA will certify the total amount collected on the debt and notify the employee and the creditor agency in writing. The notification to the creditor agency will include information on the employee's transfer.

### § 1201.34 Under what conditions will NARA make a refund of amounts collected by salary offset?

(a) If NARA is the creditor agency, it will promptly refund any amount deducted under the authority of 5 U.S.C. 5514, when:

(1) The debt is waived or all or part of the funds deducted are otherwise found not to be owed (unless expressly prohibited by statute or regulation); or

(2) An administrative or judicial order directs NARA to make a refund.

(b) Unless required or permitted by law or contract, refunds under this section will not bear interest.

### § 1201.35 Will the collection of a claim by salary offset act as a waiver of my rights to dispute the claimed debt?

No, your involuntary payment of all or any portion of a debt under this subpart will not be construed as a waiver of any rights that you may have under 5 U.S.C. 5514 or other provisions of a law or written contract, unless there are statutory or contractual provisions to the contrary.

## Subpart D—Tax Refund Offset

### § 1201.40 Which debts can NARA refer to the Treasury for collection by offsetting tax refunds?

(a) The regulations in this subpart implement 31 U.S.C. 3720A, which authorizes the Treasury to reduce a tax refund by the amount of a past-due, legally enforceable debt owed to a Federal agency.

(b) For purposes of this section, a past-due, legally enforceable debt referrable to the Treasury for tax refund offset is a debt that is owed to NARA and:

(1) Is at least $25.00;

(2) Except in the case of a judgment debt, has been delinquent for at least three months and will not have been delinquent more than 10 years at the time the offset is made;

(3) With respect to which NARA has:

(i) Given the debtor at least 60 days to present evidence that all or part of the debt is not past due or legally enforceable;

(ii) Considered evidence presented by the debtor; and

(iii) Determined that an amount of the debt is past due and legally enforceable;

(4) With respect to which NARA has notified or has made a reasonable attempt to notify the debtor that:

(i) The debt is past due, and

(ii) Unless repaid within 60 days of the date of the notice, the debt may be referred to the Treasury for offset against any refund of overpayment of tax; and

(5) All other requirements of 31 U.S.C. 3720A and the Treasury regulations relating to the eligibility of a debt for tax return offset (31 CFR 285.2) have been satisfied.

### § 1201.41 What are NARA's procedures for collecting debts by tax refund offset?

(a) NARA's Financial Services Division will be the point of contact with

the Treasury for administrative matters regarding the offset program.

(b) NARA will ensure that the procedures prescribed by the Treasury are followed in developing information about past-due debts and submitting the debts to the Treasury.

(c) NARA will submit to the Treasury a notification of a taxpayer's liability for past-due legally enforceable debt. This notification will contain the following:

(1) The name and taxpayer identification number of the debtor;

(2) The amount of the past-due and legally enforceable debt;

(3) The date on which the original debt became past due;

(4) A statement certifying that, with respect to each debt reported, all of the requirements of §1201.40(b) have been satisfied; and

(5) Any other information as prescribed by Treasury.

(d) For purposes of this section, notice that collection of the debt is stayed by a bankruptcy proceeding involving the debtor will bar referral of the debt to the Treasury.

(e) NARA will promptly notify the Treasury to correct data when NARA:

(1) Determines that an error has been made with respect to a debt that has been referred;

(2) Receives or credits a payment on the debt; or

(3) Receives notice that the person owing the debt has filed for bankruptcy under Title 11 of the United States Code and the automatic stay is in effect or has been adjudicated bankrupt and the debt has been discharged.

(f) When advising debtors of NARA's intent to refer a debt to the Treasury for offset, NARA will also advise debtors of remedial actions (*see* §§1201.9 and 1201.14 through 1201.16 of this part) available to defer the offset or prevent it from taking place.

## Subpart E—Administrative Offset

### §1201.50 Under what circumstances will NARA collect amounts that I owe to NARA (or some other Federal agency) by offsetting the debt against payments that NARA (or some other Federal agency) owes me?

(a) The regulations in this subpart apply to the collection of any debts you owe to NARA, or to any request from another Federal agency that NARA collect a debt you owe by offsetting your debt against a payment NARA owes you. Administrative offset is authorized under section 5 of the Federal Claims Collection Act of 1966, as amended (31 U.S.C. 3716). NARA will carry out administrative offset in accordance with the provisions of the FCCS. The regulations in this subpart are intended only to supplement the provisions of the Federal Claims Collection Standards.

(b) The Archivist, after attempting to collect a debt you owe to NARA under Section 3(a) of the Federal Claims Collection Act of 1966, as amended (31 U.S.C. 3711(a)), may collect the debt by administrative offset only after giving you:

(1) Written notice of the type and amount of the claim, the intention of the head of the agency to collect the claim by administrative offset, and an explanation of the rights of the debtor;

(2) An opportunity to inspect and copy the records of the agency related to the claim;

(3) An opportunity for a review within the agency of the decision of the agency related to the claim; and

(4) An opportunity to make a written agreement with the head of the agency to repay the amount of the claim.

(c) No collection by administrative offset will be made on any debt that has been outstanding for more than 10 years, unless facts material to NARA or a Federal agency's right to collect the debt were not known, and reasonably could not have been known, by the official or officials responsible for discovering and collecting the debt.

(d) The regulations in this subpart do not apply to:

(1) A case in which administrative offset of the type of debt involved is explicitly prohibited by statute; or

(2) Debts owed to NARA by Federal agencies.

### § 1201.51 How will NARA request that my debt to NARA be collected by offset against some payment that another Federal agency owes me?

The Archivist may request that funds due and payable to you by another Federal agency instead be paid to NARA to satisfy a debt you owe to NARA. NARA will refer debts to the Treasury for centralized administrative offset in accordance with the FCCS and the procedures established by the Treasury. Where centralized offset is not available or appropriate, NARA may request offset directly from the Federal agency that is holding funds for you. In requesting administrative offset, NARA will certify in writing to the Federal agency that is holding funds for you:

(a) That you owe the debt;

(b) The amount and basis of the debt; and

(c) That NARA has complied with the requirements of 31 U.S.C. 3716, its own administrative offset regulations in this subpart, the applicable administrative offset regulations of the agency holding the funds, and the applicable provisions of the FCCS with respect to providing you with due process.

### § 1201.52 What procedures will NARA use to collect amounts I owe to a Federal agency by offsetting a payment that NARA would otherwise make to me?

(a) Any Federal agency may request that NARA administratively offset funds due and payable to you in order to collect a debt you owe to that agency. NARA will initiate the requested offset only upon:

(1) Receipt of written certification from the creditor agency stating:

(i) That you owe the debt;

(ii) The amount and basis of the debt;

(iii) That the agency has prescribed regulations for the exercise of administrative offset; and

(iv) That the agency has complied with its own administrative offset regulations and with the applicable provisions of the FCCS, including providing you with any required hearing or review; and

(2) A determination by the Archivist that offsetting funds payable to you by NARA in order to collect a debt owed by you would be in the best interest of the United States as determined by the facts and circumstances of the particular case, and that such an offset would not otherwise be contrary to law.

(b) *Multiple debts.* In instances where two or more creditor agencies are seeking administrative offsets, or where two or more debts are owed to a single creditor agency, NARA may, in its discretion, allocate the amount it owes to you to the creditor agencies in accordance with the best interest of the United States as determined by the facts and circumstances of the particular case, paying special attention to applicable statutes of limitations.

### § 1201.53 When may NARA make an offset in an expedited manner?

NARA may effect an administrative offset against a payment to be made to you before completion of the procedures required by §§ 1201.51 and 1201.52 if failure to take the offset would substantially jeopardize NARA's ability to collect the debt and the time before the payment is to be made does not reasonably permit the completion of those procedures. An expedited offset will be followed promptly by the completion of those procedures. Amounts recovered by offset, but later found not to be owed to the United States, will be promptly refunded.

### § 1201.54 Can a judgment I have obtained against the United States be used to satisfy a debt that I owe to NARA?

Collection by offset against a judgment obtained by a debtor against the United States will be accomplished in accordance with 31 U.S.C. 3728 and 31 U.S.C. 3716.

## Subpart F—Administrative Wage Garnishment

### § 1201.55 How will NARA collect debts through Administrative Wage Garnishment?

NARA will collect debts through Administrative Wage Garnishment in accordance with the Administrative Wage Garnishment regulations issued by the Treasury. NARA adopts, for the

purposes of this subpart, the Treasury's Administrative Wage Garnishment regulations in 31 CFR 285.11.

# PART 1202—REGULATIONS IMPLEMENTING THE PRIVACY ACT OF 1974

## Subpart A—General Information About the Privacy Act

Sec.
1202.1 What does this part cover?
1202.2 What this part does not cover.
1202.4 Definitions.
1202.6 Whom should I contact for Privacy Act matters at NARA?
1202.8 How does NARA handle records that are in Government-wide Privacy Act systems?
1202.10 Does NARA handle access to and disclosure of records of defunct agencies in the custody of NARA?

## Subpart B—Collecting Information

1202.18 How does NARA collect information about individuals?
1202.20 What advisory information does NARA provide before collecting information from me?
1202.22 Will NARA need my Social Security Number?
1202.24 Will NARA ever request information about me from someone else?
1202.26 Who will make sure that my record is accurate?
1202.28 What rules do NARA employees follow in managing personal information?
1202.30 How does NARA safeguard its systems of records?

## Subpart C—Individual Access to Records

1202.40 How can I gain access to NARA records about myself?
1202.42 How are requests for access to medical records handled?
1202.44 How long will it take for NARA to process my request?
1202.46 In what ways will NARA provide access?
1202.48 Will I have to pay for copies of records?
1202.50 Does NARA require prepayment of fees?
1202.52 How do I pay?
1202.54 On what grounds can NARA deny my Privacy Act request?
1202.56 How do I appeal a denial of my Privacy Act request?
1202.58 How are appeals processed?

## Subpart D—Disclosure of Records

1202.60 When does NARA disclose a record in a Privacy Act system of records?
1202.62 What are the procedures for disclosure of records to a third party?
1202.64 How do I appeal a denial of disclosure?
1202.66 How does NARA keep account of disclosures?

## Subpart E—Request To Amend Records

1202.70 Whom should I contact at NARA to amend records about myself?
1202.72 How does NARA handle requests to amend records?
1202.74 How will I know if NARA approved my amendment request?
1202.76 Can NARA deny my request for amendment?
1202.78 How do I accept an alternative amendment?
1202.80 How do I appeal the denial of a request to amend a record?
1202.82 How do I file a Statement of Disagreement?
1202.84 Can I seek judicial review?

## Subpart F—Exemptions

1202.90 What NARA systems of records are exempt from release under the National Security Exemption of the Privacy Act?
1202.92 What NARA systems of records are exempt from release under the Law Enforcement Exemption of the Privacy Act?
1202.94 What NARA systems of records are exempt from release under the Investigatory Information Material Exemption of the Privacy Act?

AUTHORITY: 5 U.S.C. 552a; 44 U.S.C. 2104(a).

SOURCE: 66 FR 65652, Dec. 20, 2001, unless otherwise noted.

## Subpart A—General Information About the Privacy Act

### § 1202.1 What does this part cover?

(a) This part covers requests under the Privacy Act (5 U.S.C. 552a) for NARA operational records and records of defunct agencies stored in NARA record centers.

(b) This part explains how NARA collects, uses and maintains records about you that are filed by your name or other personal identifiers and which are contained in a ''system of records'' as defined by 5 U.S.C. 552a(a)(5).

(c) This part describes the procedures to gain access to and contest the contents of your records, and the conditions under which NARA discloses such records to others.

**§ 1202.2 What this part does not cover.**

This part does not cover:

(a) Records that have been transferred into the National Archives of the United States for permanent preservation. Archival records that are contained in systems of records that become part of the National Archives of the United States are exempt from most provisions of the Privacy Act (see 5 U.S.C. 552a(l)(2) and (l)(3)). See subchapter C of this chapter for rules governing access to these type records.

(b) Records of other agencies that are stored in NARA record centers on behalf of that agency are governed by the Privacy Act rules of the transferring agency. Send your request for those records directly to those agencies.

(c) Personnel and medical records held by the National Personnel Records Center (NPRC) on behalf of the Department of Defense and the Office of Personnel Management. Privacy Act requests for these records should come to the NPRC.

**§ 1202.4 Definitions.**

For the purposes of this part, the term:

(a) *Access* means a transfer of a record, a copy of a record, or the information in a record to the subject individual, or the review of a record by the subject individual.

(b) *Agency* means any executive department, military department, Government corporation, Government-controlled corporation, or other establishment in the executive branch of the Government (including the Executive Office of the President), or any independent regulatory agency.

(c) *Defunct agency* means an agency that has ceased to exist, and has no successor in function.

(d) *Defunct agency* records means the records in a Privacy Act system of a defunct agency that are stored in a NARA records center.

(e) *Disclosure* means a transfer by any means of a record, a copy of a record, or the information contained in a record to a recipient other than the subject individual, or the review of a record by someone other than the subject individual.

(f) *Individual* means a citizen of the United States or an alien lawfully admitted for permanent residence.

(g) *Maintain* includes maintain, collect, use, or disseminate.

(h) *NARA Privacy Act Appeal Official* means the Deputy Archivist of the United States for appeals of denials of access to or amendment of records maintained in a system of records, except where the system manager is the Inspector General; then the term means the Archivist of the United States.

(i) *Record* means any item, collection, or grouping of information about an individual that is maintained by an agency, including, but not limited to, his or her education, financial transactions, medical history and criminal or employment history, and that contains his or her name or an identifying number, symbol, or other identifying particular assigned to the individual, such as a fingerprint, voiceprint, or photograph. For purposes of this part, ''record'' does not mean archival records that have been transferred to the National Archives of the United States.

(j) *Routine use* means, with respect to the disclosure of a record, the use of that record for a purpose which is compatible with the purpose for which it was collected.

(k) *Solicitation* means a request by a NARA employee or contractor that an individual provide information about himself or herself.

(l) *Statistical record* means a record in a system of records maintained for statistical research or reporting purposes only and not used in whole or in part in making any determination about an identifiable individual, except as provided by 13 U.S.C. 8.

(m) *Subject individual* means the individual named or discussed in a record or the individual to whom a record otherwise pertains.

(n) *System manager* means the NARA employee who is responsible for the maintenance of a system of records and

for the collection, use, and dissemination of information in that system of records.

(o) *System of records* means a group of records from which information is retrieved by the name of the individual or by some identifying number, symbol, or other identifier assigned to that individual.

### § 1202.6 Whom should I contact for Privacy Act matters at NARA?

Contact the NARA Privacy Act Officer, National Archives and Records Administration (NGC), Room 3110, 8601 Adelphi Road, College Park, MD 20740–6001, for guidance in making a Privacy Act request, or if you need assistance with an existing request. The Privacy Act Officer will refer you to the responsible system manager. Details about what to include in your Privacy Act request are discussed in Subpart C of this part.

### § 1202.8 How does NARA handle records that are in Government-wide Privacy Act systems?

Records in the custody of NARA in a Government-wide Privacy Act system are the primary responsibility of another agency, e.g., the Office of Personnel Management (OPM) or the Office of Government Ethics (OGE). These records are governed by the regulations established by that agency pursuant to the Privacy Act. NARA provides access using that agency's regulations.

### § 1202.10 Does NARA handle access to and disclosure of records of defunct agencies in the custody of NARA?

Yes, records of defunct agencies in the custody of NARA at a NARA record center are covered by the provisions of this part.

## Subpart B—Collecting Information

### § 1202.18 How does NARA collect information about individuals?

Any information that is used in making a determination about your rights, benefits, or privileges under NARA programs is collected directly from you—the subject individual—to the greatest extent possible.

### § 1202.20 What advisory information does NARA provide before collecting information from me?

(a) Before collecting information from you, NARA will advise you of:

(1) The authority for collecting the information and whether providing the information is mandatory or voluntary;

(2) The purpose for which the information will be used;

(3) The routine uses of the information; and

(4) The effect on you, if any, of not providing the information.

(b) NARA ensures that forms used to record the information that you provide are in compliance with the Privacy Act and this part.

### § 1202.22 Will NARA need my Social Security Number?

(a) Before a NARA employee or NARA contractor asks you to provide your social security number (SSN), he or she will ensure that the disclosure is required by Federal law or under a Federal law or regulation adopted before January 1, 1975.

(b) If you are asked to provide your SSN, the NARA employee or contractor must first inform you:

(1) Whether the disclosure is mandatory or voluntary;

(2) The statute or authority under which your SSN is solicited; and

(3) How your SSN will be used.

### § 1202.24 Will NARA ever request information about me from someone else?

NARA will make every effort to gather information from you directly. When NARA solicits information about you from someone else, NARA will explain to that person the purpose for which the information will be used.

### § 1202.26 Who will make sure that my record is accurate?

The system manager ensures that all records used by NARA to make a determination about any individual are maintained with such accuracy, relevancy, timeliness, and completeness as is reasonably possible to ensure fairness to you.

### § 1202.28 What rules do NARA employees follow in managing personal information?

All NARA employees and contractors involved in the design, development, operation or maintenance of any system of records must review the provisions of the Privacy Act and the regulations in this part. NARA employees and contractors must conduct themselves in accordance with the rules of conduct concerning the protection of nonpublic information in the Standards of Ethical Conduct for Employees of the Executive Branch, 5 CFR 2635.703.

### § 1202.30 How does NARA safeguard its systems of records?

(a) The system manager ensures that appropriate administrative, technical, and physical safeguards are established to ensure the security and confidentiality of records. In order to protect against any threats or hazards to their security or loss of integrity, paper records are maintained in areas accessible only to authorized NARA personnel. Electronic records are protected in accordance with the Computer Security Act, OMB Circular A–11 requiring privacy analysis in reporting to OMB, and are accessed via passwords from terminals located in attended offices. After hours, buildings have security guards and/or doors are secured and all entrances are monitored by electronic surveillance equipment.

(b) The system manager, at his/her discretion, may designate additional safeguards similar to or greater than those described in paragraph (a) of this section for unusually sensitive records.

(c) The system manager only permits access to and use of automated or manual personnel records to persons whose official duties require such access, or to you or to a representative designated by you.

## Subpart C—Individual Access to Records

### § 1202.40 How can I gain access to NARA records about myself?

(a) If you wish to request access to information about yourself contained in a NARA Privacy Act system of records, you must notify the NARA Privacy Act Officer, National Archives and Records Administration, Rm. 3110, 8601 Adelphi Rd., College Park, MD 20740–6001. If you wish to allow another person to review or obtain a copy of your record, you must provide authorization for that person to obtain access as part of your request.

(b) Your request must be in writing and the letter and the envelope must be marked ''Privacy Act Request.'' Your request letter must contain:

(1) The complete name and identifying number of the NARA system as published in the FEDERAL REGISTER;

(2) A brief description of the nature, time, place, and circumstances of your association with NARA;

(3) Any other information, which you believe, would help NARA to determine whether the information about you is included in the system of records;

(4) If you are authorizing another individual to have access to your records, the name of that person; and

(5) A Privacy Act certification of identity. When you make a request for access to records about yourself, you must verify your identity. You must sign your request and your signature must either be notarized or submitted by you under 28 U.S.C. 1746, a law that permits statements to be made under penalty of perjury as a substitute for notarization. While no specific form is required, you may obtain a Certification of Identity form for this purpose from the NARA Privacy Act Officer. The following information is required:

(i) Your full name;

(ii) An acknowledgment that you understand the criminal penalty in the Privacy Act for requesting or obtaining access to records under false pretenses (5 U.S.C. 552a(i)(3)); and

(iii) A declaration that your statement is true and correct under penalty of perjury (18 U.S.C. 1001).

(c) The procedure for accessing an accounting of disclosure is identical to the procedure for access to a record as set forth in this section.

### § 1202.42 How are requests for access to medical records handled?

When NARA receives a request for access to medical records, if NARA believes that disclosure of medical and/or psychological information directly to

you could have an adverse effect on you, you may be asked to designate in writing a physician or mental health professional to whom you would like the records to be disclosed, and disclosure that otherwise would be made to you will instead be made to the designated physician or mental health professional.

### § 1202.44 How long will it take for NARA to process my request?

(a) NARA will acknowledge your request within 10 workdays of its receipt by NARA and if possible, will make the records available to you at that time. If NARA cannot make the records immediately available, the acknowledgment will indicate when the system manager will make the records available.

(b) If NARA anticipates more than a 10 workday delay in making a record you requested available, NARA also will explain in the acknowledgment specific reasons for the delay.

(c) If your request for access does not contain sufficient information to permit the system manager to locate the records, NARA will request additional information from you. NARA will have 10 workdays following receipt of the additional information in which to make the records available or to acknowledge receipt of the request and to indicate when the records will be available.

### § 1202.46 In what ways will NARA provide access?

(a) At your request, NARA will provide you, or a person authorized by you, a copy of the records by mail or by making the records available in person during normal business hours at the NARA facility where the records are located. If you are seeking access in person, the system manager will permit you to examine the original record, will provide you with a copy of the records, or both.

(b) When obtaining access to the records in person at a NARA facility, you must provide proof of identification either by producing at least one piece of identification bearing a name or signature and either a photograph or physical description (e.g., a driver's license or employee identification card) or by signing the Certification of Identity form described in § 1204.40 (b)(5). NARA reserves the right to ask you to produce additional pieces of identification to assure NARA of your identity. You will also be asked to sign an acknowledgement that you have been given access.

### § 1202.48 Will I have to pay for copies of records?

Yes. However NARA will waive fees for the first 100 pages copied or when the cost to collect the fee will exceed the amount collected. When a fee is charged, the charge per copy is $0.20 per page if NARA makes the copy or $0.15 per page if you make the copy on a NARA self-service copier. Fees for other reproduction processes are computed upon request.

### § 1202.50 Does NARA require prepayment of fees?

If the system manager determines that the estimated total fee is likely to exceed $250, NARA will notify you that the estimated fee must be prepaid before you can have copies of the records. If the final fee is less than the amount you prepaid, NARA will refund the difference.

### § 1202.52 How do I pay?

You must pay by check or money order. Make your check or money order payable to the National Archives and Records Administration and send it to the NARA Privacy Act Officer, Room 3110, 8601 Adelphi Road, College Park, MD 20740–6001.

### § 1202.54 On what grounds can NARA deny my Privacy Act request?

(a) NARA can deny your Privacy Act request for records if the records are maintained in an exempt systems of records are described in subpart F of this part.

(b) A system manager may deny your request for access to your records only if:

(1) NARA has published rules in the FEDERAL REGISTER exempting the pertinent system of records from the access requirement; and

(2) The record is exempt from disclosure under the Freedom of Information Act (FOIA).

(c) Upon receipt of a request for access to a record which is contained within an exempt system of records, NARA will:

(1) Review the record to determine whether all or part of the record must be released to you in accordance with § 1202.40, notwithstanding the inclusion of the record within an exempt system of records; and

(2) Provide access to the record (or part of the record, if it is not fully releasable) in accordance with § 1202.46 or notify you that the request has been denied in whole or in part.

(d) If your request is denied in whole or in part, NARA's notice will include a statement specifying the applicable Privacy Act and FOIA exemptions and advising you of the right to appeal the decision as explained in § 1202.56.

### § 1202.56 How do I appeal a denial of my Privacy Act request?

(a) If you are denied access in whole or in part to records pertaining to yourself, you may file with NARA an appeal of that denial. Your appeal letter must be post marked no later than 35 calendar days after the date of the denial letter from NARA.

(1) Address appeals involving denial of access to Office of Inspector General records to NARA Privacy Act Appeal Official (N), National Archives and Records Administration, Room 4200, 8601 Adelphi Road, College Park, MD 20740–6001.

(2) Address all other appeals to the NARA Privacy Act Appeal Official (ND), National Archives and Records Administration, Room 4200, 8601 Adelphi Road, College Park, MD 20740–6001.

(b) All appeals of denial of access to the NARA Privacy Act Appeal Official must be in writing. Mark both the envelope and the appeal ''Privacy Act '' Access Appeal.''

### § 1202.58 How are appeals processed?

(a) Upon receipt of your appeal, the NARA Privacy Act Appeal Official will consult with the system manager, legal counsel, and such other officials as may be appropriate. If the NARA Privacy Act Appeal Official determines that the records you requested are not exempt from release, NARA grants you access and so notifies you.

(b) If the NARA Privacy Act Appeal Official determines that your appeal must be rejected, NARA will immediately notify you in writing of that determination. This decision is final and cannot be appealed further within NARA. NARA's notification to you will include:

(1) The reason for the rejection of the appeal; and

(2) Notice of your right to seek judicial review of NARA's final determination, as described in 36 CFR 1202.84.

(c) NARA will make its final determination no later than 30 workdays from the date on which NARA receives your appeal. NARA may extend this time limit by notifying you in writing before the expiration of the 30 workdays. This notification will include an explanation of the reasons for the time extension.

## Subpart D—Disclosure of Records

### § 1202.60 When does NARA disclose a record in a Privacy Act system of records?

NARA will not disclose any records in a Privacy Act system of records to any person or to another agency without the express written consent of the subject individual unless the disclosure is:

(a) To NARA employees who have a need for the information in the official performance of their duties;

(b) Required by the provisions of the Freedom of Information Act, as amended;

(c) For a routine use that has been published in a notice in the FEDERAL REGISTER;

(d) To the Bureau of Census for purposes of planning or carrying out a census or survey or related activity pursuant to title 13 U.S.C.;

(e) To a person who has provided NARA with advance adequate written assurance as specified in § 1202.62(a) that the record will be used solely as a statistical research or reporting record. (Personal identifying information is deleted from the record released for statistical purposes. The system manager ensures that the identity of

the individual cannot reasonably be deduced by combining various statistical records.)

(f) To the National Archives of the United States as a record which has sufficient historical or other value to warrant its continued preservation by the United States Government or for evaluation by the Archivist or the designee of the Archivist to determine whether the record has such value;

(g) To another agency or any governmental jurisdiction within or under the control of the United States for a civil or criminal law enforcement activity if the activity is authorized by law, and if the head of the agency or his or her other designated representative has made a written request to NARA specifying the particular portion desired and the law enforcement activity for which the record is sought;

(h) To a person showing compelling circumstances affecting the health or safety of an individual, and not necessarily the individual to whom the record pertains. A disclosure of this nature is followed by a notification to the last known address of the subject individual;

(i) To either House of Congress or to a committee or subcommittee (joint or of either House), in the course of the performance of official legislative activities;

(j) To the Comptroller General or any of his authorized representatives in the course of the performance of the duties of the General Accounting Office;

(k) Pursuant to the order of a court of competent jurisdiction; or

(l) To a consumer reporting agency in accordance with 31 U.S.C. 3711(e).

### § 1202.62 What are the procedures for disclosure of records to a third party?

(a) To obtain access to records about a person other than yourself, address the request to the NARA Privacy Act Officer, National Archives and Records Administration, Room 3110, 8601 Adelphi Rd., College Park, MD 20740–6001. If you are requesting access for statistical research as described in § 1202.60(e), you must submit a written statement that includes as a minimum:

(1) A statement of the purpose for requesting the records; and

(2) Certification that the records will be used only for statistical purposes.

(b) NARA will acknowledge your request within 10 workdays and will make a decision within 30 workdays, unless NARA notifies you that the time limit must be extended for good cause.

(c) Upon receipt of your request, NARA will verify your right to obtain access to documents pursuant to § 1202.60. Upon verification, the system manager will make the requested records available to you.

(d) If NARA determines that the disclosure is not permitted under § 1202.60, the system manager will deny your request in writing. NARA will inform you of the right to submit a request for review of the denial and a final determination to the appropriate NARA Privacy Act Appeal Officer.

### § 1202.64 How do I appeal a denial of disclosure?

(a) Your request for a review of the denial of disclosure to records maintained by the Office of the Inspector General must be addressed to the NARA Privacy Act Appeal Officer (N), National Archives and Records Administration, Room 4200, 8601 Adelphi Rd., College Park, MD 20740–6001.

(b) Requests for a review of a denial of disclosure to all other NARA records must be addressed to the NARA Privacy Act Appeal Officer (ND), National Archives and Records Administration, Room 4200, 8601 Adelphi Rd., College Park, MD 20740–6001.

### § 1202.66 How does NARA keep account of disclosures?

(a) Except for disclosures made to NARA employees in the course of the performance of their duties or when required by the Freedom of Information Act (see § 1202.60(a) and (b)), NARA keeps an accurate accounting of each disclosure and retains it for 5 years after the disclosure or for the life of the record, whichever is longer. The accounting includes the:

(1) Date of disclosure;

(2) Nature, and purpose of each disclosure; and

(3) Name and address of the person or agency to which the disclosure is made.

(b) The system manager also maintains with the accounting of disclosures:

(1) A full statement of the justification for the disclosures;

(2) All documentation surrounding disclosure of a record for statistical or law enforcement purposes; and

(3) Evidence of written consent by the subject individual to a disclosure, if applicable.

(c) Except for the accounting of disclosures made for a law enforcement activity (see § 1202.60(g)) or of disclosures made from exempt systems (see subpart F of this part), the accounting of disclosures will be made available to the subject individual upon request. Procedures for requesting access to the accounting of disclosures are in subpart C.

## Subpart E—Request To Amend Records

### § 1202.70 Whom should I contact at NARA to amend records about myself?

If you believe that a record that NARA maintains about you is not accurate, timely, relevant or complete, you may request that the record be amended. Write to the NARA Privacy Act Officer, Room 3110, 8601 Adelphi Rd, College Park, MD 20470–6001. Employees of NARA who desire to amend their personnel records should write to the Director, Human Resources Services Division. You should include as much information, documentation, or other evidence as needed to support your request to amend the pertinent record. Mark both the envelop and the letter with the phrase ''Privacy Act—Request To Amend Record.''

### § 1202.72 How does NARA handle requests to amend records?

(a) NARA will acknowledge receipt of a request to amend a record within 10 workdays. If possible, the acknowledgment will include the system manager's determination either to amend the record or to deny your request to amend as provided in § 1202.76.

(b) When reviewing a record in response to your request to amend, the system manager will assess the accuracy, relevance, timeliness, and completeness of the existing record in light of your proposed amendment to determine if your request to amend is justified. If you request the deletion of information, the system manager also will review your request and the existing record to determine whether the information is relevant and necessary to accomplish NARA's purpose, as required by law or Executive order.

### § 1202.74 How will I know if NARA approved my amendment request?

If NARA approves your amendment request, the system manager will promptly make the necessary amendment to the record and will send a copy of the amended record to you. NARA will also advise all previous recipients of the record, using the accounting of disclosures, that an amendment has been made and give the substance of the amendment. Where practicable, NARA will also send a copy of the amended record to previous recipients.

### § 1202.76 Can NARA deny my request for amendment?

If the system manager denies your request to amend or determines that the record should be amended in a manner other than that requested by you, NARA will advise you in writing of the decision. The denial letter will state:

(a) The reasons for the denial of your amendment request;

(b) Proposed alternative amendments, if appropriate;

(c) Your right to appeal the denial; and

(d) The procedures for appealing the denial.

### § 1202.78 How do I accept an alternative amendment?

If your request to amend a record is denied and NARA suggested alternative amendments, and you agree to those alternative amendments, you must notify the Privacy Act Officer who will then make the necessary amendments in accordance with § 1202.74.

### § 1202.80 How do I appeal the denial of a request to amend a record?

(a) If you disagree with a denial of your request to amend a record, you can file an appeal of that denial.

(1) Address your appeal of the denial to amend records signed by a system manager other than the Inspector General, to the NARA Privacy Act Appeal Official (ND), Room 3110, 8601 Adelphi Road, College Park, MD, 20740–6001.

(2) Address the appeal of the denial to amend records signed by the Inspector General to the NARA Privacy Act Appeal Official (N), Room 3110, 8601 Adelphi Road, College Park, MD, 20740–6001.

(3) For current NARA employees if the denial to amend concerns a record maintained in the employee's Official Personnel Folder or in another Government-wide system maintained by NARA on behalf of another agency, NARA will provide the employee with name and address of the appropriate appeal official in that agency.

(b) Appeals to NARA must be in writing and must be postmarked no later than 35 calendar days from the date of the NARA denial of a request to amend. Your appeal letter and envelope must be marked ''Privacy Act—Appeal''.

(c) Upon receipt of an appeal, the NARA Privacy Act Appeal Official will consult with the system manager, legal counsel, and such other officials as may be appropriate. If the appeal official determines that the record should be amended, he or she will instruct the system manager to amend the record in accordance with § 1202.74 and will notify you of that action.

(d) If, after consulting with officials specified in paragraph (c) of this section, the NARA Privacy Act Appeal Official determines that your appeal should be rejected, the NARA Privacy Act Appeal Official will notify you in writing of that determination. This notice serves as NARA's final determination on your request to amend a record. The letter to you will include:

(1) The reason for the rejection of your appeal;

(2) Proposed alternative amendments, if appropriate, which you may accept (see 36 CFR 1202.78 for the procedure);

(3) Notice of your right to file a Statement of Disagreement for distribution in accordance with § 1202.82; and

(4) Notice of your right to seek judicial review of the NARA final determination, as provided in § 1202.84.

(e) The NARA final determination will be made no later than 30 workdays from the date on which the appeal is received by the NARA Privacy Act Appeal Official. In extraordinary circumstances, the NARA Privacy Act Appeal Official may extend this time limit by notifying you in writing before the expiration of the 30 workdays. The notification will include a justification for the extension of time.

### § 1202.82 How do I file a Statement of Disagreement?

If you receive a NARA final determination denying your request to amend a record, you may file a Statement of Disagreement with the appropriate system manager. The Statement of Disagreement must include an explanation of why you believe the record to be inaccurate, irrelevant, untimely, or incomplete. The system manager will maintain your Statement of Disagreement in conjunction with the pertinent record. The System Manager will send a copy of the Statement of Disagreement to any person or agency to whom the record has been disclosed, only if the disclosure was subject to the accounting requirements of § 1202.60.

### § 1202.84 Can I seek judicial review?

Yes, within 2 years of receipt of a NARA final determination as provided in § 1202.54 or § 1202.80, you may seek judicial review of that determination. You may file a civil action in the Federal District Court:

(a) In which you reside or have a principal place of business;

(b) In which the NARA records are located; or

(c) In the District of Columbia.

## Subpart F—Exemptions

### § 1202.90 What NARA systems of records are exempt from release under the National Security Exemption of the Privacy Act?

(a) The Investigative Case Files of the Inspector General (NARA–23) and the Personnel Security Case Files (NARA–24) systems of records are eligible for exemption under 5 U.S.C. 552a(k)(1) because the records in these systems:

(1) Contain information specifically authorized under criteria established by an Executive Order to be kept secret in the interest of national defense or foreign policy and

(2) Are in fact properly classified pursuant to such Executive Order.

(b) The systems described in paragraph (a) are exempt from 5 U.S.C. 552a (c)(3), (d), (e)(1), and (e)(4)(G) and (H). Exemptions from the particular subsections are justified for the following reasons:

(1) From subsection (c)(3) because accounting for each disclosure could result in the release of properly classified information which would compromise the national defense or disrupt foreign policy.

(2) From the access and amendment provisions of subsection (d) because access to the records in these systems of records could result in the release of properly classified information which would compromise the national defense or disrupt foreign policy. Amendment of either of these series of records would interfere with ongoing investigations and law enforcement or national security activities and impose an impossible administrative burden by requiring investigations to be continuously reinvestigated.

(3) From subsection (e)(1) because verification of the accuracy of all information to the records could result in the release of properly classified information which would compromise the national defense or disrupt foreign policy.

(4) From subsection (e)(4)(G) and (H) because these systems are exempt from the access and amendment provisions of subsection (d), pursuant to subsection (k)(1) of the Privacy Act.

### § 1202.92 What NARA systems of records are exempt from release under the Law Enforcement Exemption of the Privacy Act?

(a) The Investigative Files of the Inspector General (NARA–23) system of records is eligible for exemption under 5 U.S.C. 552a(k)(2) because this record system contains investigatory material of actual, potential or alleged criminal, civil or administrative violations, compiled for law enforcement purposes other than within the scope of subsection (j)(2) of 5 USC 552a. If you are denied any right, privilege or benefit that you would otherwise be entitled by Federal law, or for which you would otherwise be eligible, as a result of the record, NARA will make the record available to you, except for any information in the record that would disclose the identity of a confidential source as described in 5 U.S.C. 552a(k)(2).

(b) The system described in paragraph (a) of this section is exempt from 5 U.S.C. 552a (c)(3), (d), (e)(1) and (e)(4) (G) and (H), and (f). Exemptions from the particular subsections are justified for the following reasons:

(1) From subsection (c)(3) because release of disclosure accounting could alert the subject of an investigation about the alleged violations, to the existence of the investigation and to the fact that they are being investigated by the Office of Inspector General (OIG) or another agency. Release of such information could provide significant information concerning the nature of the investigation, resulting in the tampering or destruction of evidence, influencing of witnesses, danger to individuals involved, and other activities that could impede or compromise the investigation.

(2) From the access and amendment provisions of subsection (d) because access to the records contained in this system of records could inform the subject of an investigation of an actual or potential criminal, civil, or administrative violation, of the existence of that investigation; of the nature and scope of the information and evidence obtained as to his/her activities; of the identity of confidential sources, witnesses, and law enforcement personnel; and of information that may enable the

subject to avoid detection or apprehension. These factors would present a serious impediment to effective law enforcement where they prevent the successful completion of the investigation, endanger the physical safety of confidential sources, witnesses, and law enforcement personnel, and/or lead to the improper influencing of witnesses, the destruction of evidence, or the fabrication of testimony. In addition, granting access to such information could disclose security-sensitive or confidential business information or information that would constitute an unwarranted invasion of the personal privacy of third parties. The amendment of these records could allow the subject to avoid detection or apprehension and interfere with ongoing investigations and law enforcement activities.

(3) From subsection (e)(1) because the application of this provision could impair investigations and interfere with the law enforcement responsibilities of the OIG or another agency for the following reasons:

(i) It is not possible to detect relevance or need for specific information in the early stages of an investigation, case or matter. After the information is evaluated, relevance and necessity may be established.

(ii) During an investigation, the OIG may obtain information about other actual or potential criminal, civil or administrative violations, including those outside the scope of its jurisdiction. The OIG should retain this information, as it may aid in establishing patterns of inappropriate activity, and can provide valuable leads for Federal and other law enforcement agencies.

(iii) In interviewing individuals or obtaining other forms of evidence during an investigation, information may be supplied to an investigator, which relates to matters incidental to the primary purpose of the investigation but which may relate also to matters under the investigative jurisdiction of another agency. Such information cannot readily be segregated.

(iv) From subsection (e)(4)(G) and (H) because this system is exempt from the access and amendment provisions of subsection (d), pursuant to subsection (k)(2) of the Privacy Act.

(v) From subsection (f) because this system is exempt from the access and amendment provisions of subsection (d), pursuant to subsection (k)(2) of the Privacy Act.

### § 1202.94 What NARA systems of records are exempt from release under the Investigatory Information Material exemption of the Privacy Act?

(a) The Personnel Security Case Files (NARA–24) system of records is eligible for exemption under 5 U.S.C. 552a(k)(5) because it contains investigatory material compiled solely for the purpose of determining suitability, eligibility, or qualifications for federal employment or access to classified information. The only information exempt under this provision is that which would disclose the identity of a confidential source described in 5 U.S.C. 552a(k)(2).

(b) The system of records described in paragraph (a) of this section is exempt from 5 U.S.C. 552a(d)(1). Exemption from the particular subsection is justified as access to records in the system would reveal the identity(ies) of the source(s) of information collected in the course of a background investigation.

## PART 1206—NATIONAL HISTORICAL PUBLICATIONS AND RECORDS COMMISSION

Sec.

### Subpart A—General

1206.1 What does this part cover?
1206.3 What definitions apply to the regulations in Part 1206?
1206.4 What is the purpose of the Commission?
1206.5 Who serves on the Commission?
1206.6 How do you organize the grant program?
1206.8 How do you operate the grant program?
1206.10 How do you make grant opportunities known?
1206.11 How may an applicant apply for an NHPRC grant?
1206.12 What are my responsibilities once I have received a grant?

### Subpart B—Publications Grants

1206.20 What are the scope and purpose of publications grants?
1206.22 What type of proposal is eligible for a publications grant?
1206.24 What type of proposal is ineligible for a publications grant?

### Subpart C—Records Grants

1206.30 What is the scope and purpose of records grants?
1206.32 What type of proposal is eligible for a records grant?
1206.34 What type of proposal is ineligible for a records grant?

### Subpart D—State Records Program

1206.40 What is a State records program?
1206.41 What is a state historical records advisory board and how is it constituted?
1206.42 What is a State Coordinator?
1206.43 What are the duties of the deputy State coordinator?
1206.44 Who is eligible for sub-grants?
1206.45 What rules govern sub-grant distribution, cost sharing, grant administration, and reporting?

### Subpart E—Applying for NHPRC Grants

1206.50 What types of funding and cost sharing arrangements does the Commission make?
1206.52 Does the Commission ever place conditions on its grants?
1206.54 Who may apply for NHPRC grants?
1206.56 When are applications due?
1206.58 How do I apply for a grant?
1206.60 What must I provide as a formal grant application?
1206.62 Who reviews and evaluates grant proposals?
1206.64 What formal notification will I receive, and will it contain other information?

### Subpart F—Grant Administration

1206.70 Who is responsible for administration of NHPRC grants?
1206.72 Where can I find the regulatory requirements that apply to NHPRC grants?
1206.74 Do I need prior written approval for changes to the grant project?
1206.76 May I receive an extension to my grant project?
1206.80 What reports am I required to make?
1206.82 What is the format and content of the financial report?
1206.84 What is the format and content of the narrative report?
1206.86 What additional materials must I submit with the final narrative report?
1206.88 Does the NHPRC have any liability under a grant?
1206.90 Must I acknowledge NHPRC grant support?

AUTHORITY: 44 U.S.C. 2104(a); 44 U.S.C. 2501–2506.

SOURCE: 71 FR 27624, May 12, 2006, unless otherwise noted.

## Subpart A—General

### § 1206.1 What does this part cover?

This part prescribes the procedures and rules governing the operation of the grant program of the National Historical Publications and Records Commission.

[71 FR 27624, May 12, 2006. Redesignated at 75 FR 66317, Oct. 28, 2010]

### § 1206.3 What definitions apply to the regulations in Part 1206?

As used in Part 1206:

*Board* refers to a State historical records advisory board.

*Commission* (see NHPRC).

*Coordinator* means the coordinator of a State historical records advisory board.

*Cost sharing* means the financial contribution the applicant pledges toward the total cost of a project. Cost sharing can include both direct and indirect expenses, contributions provided by the applicant or by third parties as in-kind or cash contributions, and any income earned directly by the project.

*Direct costs* means expenses that are attributable directly to the cost of a project, such as salaries, project supplies, travel expenses, equipment rented or purchased for the project, or services procured for the project.

*Grant opportunity announcement* refers to a document published on the NHPRC Web site and at *http://www.grants.gov* that describes a type of grant offered, eligibility requirements, and application instructions.

*Guidance* refers to a non-binding document published on the NHPRC Web site to clarify or explain Commission policy or to provide procedural details.

*Historical records* means documentary material having permanent or enduring value, including manuscripts, personal papers, official records, maps, audio-visual materials, and electronic files.

*Historical records repository* means organizations whose mission is to acquire, preserve, and promote the use of historical records. They include archives, special collections, museums, and historical societies.

*Indirect costs* means costs incurred for common or joint objectives of an applicant's organization and therefore not attributable to a specific project or activity. Typically, indirect costs include items such as overhead for facilities maintenance and accounting services.

*NHPRC* means members of the National Historical Publications and Records Commission acting as a body.

*NHPRC staff* refers to the Executive Director and the staff of the Commission or the Executive Director of the Commission.

*State*, in §§ 1206.40 through 1206.42, means all 50 States of the Union, plus the District of Columbia, Puerto Rico, the U.S. Virgin Islands, Guam, American Samoa, and the Commonwealth of the Northern Mariana Islands.

*The Manual of Suggested Practices* refers to ''The Manual of Suggested Practices for State Historical Records Advisory Boards.'' It is a type of guidance.

[75 FR 66317, Oct. 28, 2010]

### § 1206.4 What is the purpose of the Commission?

The National Historical Publications and Records Commission (NHPRC or Commission), a statutory body affiliated with the National Archives and Records Administration (NARA), supports a wide range of activities to preserve, publish, and encourage the use of primary documentary sources. Through the NHPRC's grant programs, training programs, and special projects, the Commission offers advice and assistance to State and local government agencies, non-Federal nonprofit organizations and institutions, and Federally-acknowledged or state-recognized Native American tribes or groups committed to the preservation, publication, or use of United States documentary resources.

[75 FR 66317, Oct. 28, 2010]

### § 1206.5 Who serves on the Commission?

Established by Congress in 1934, the Commission is a 15-member body, chaired by the Archivist of the United States and comprised of representatives of the three branches of the Federal Government and of professional associations of archivists, historians, documentary editors, and records administrators.

### § 1206.6 How do you organize the grant program?

We offer grants to support publications projects (subpart B), and records projects (subpart C). State grants (subpart D) are made to designated state agencies for statewide archival services and may include subgrants to individuals and institutions. We also support a variety of professional development opportunities.

### § 1206.8 How do you operate the grant program?

(a) The Executive Director manages the program under Commission guidance and the immediate administrative direction of its Chairman, the Archivist of the United States.

(b) The Commission establishes grant program priorities as reflected in its grant opportunity announcements and, from time-to-time, issues non-binding, clarifying guidance documents through the NHPRC Web site.

(c) To assure fair treatment of every application, all members of the Commission and its staff follow conflict-of-interest rules.

(d) The purpose and work plan of all NHPRC-funded grant projects must be in accord with current Commission program guidance as reflected in the grant opportunity announcements.

(e) The Commission makes funding recommendations to the Archivist of the United States, who has the authority to award grants.

[71 FR 27624, May 12, 2006, as amended at 75 FR 66317, Oct. 28, 2010]

### § 1206.10 How do you make grant opportunities known?

(a) The Commission annually determines which grant opportunities it will

offer, and establishes eligibility, application deadlines, and programmatic requirements.

(b) The NHPRC staff prepares grant opportunity announcements consisting of all information necessary to apply for each grant and publishes the announcements on the NHPRC Web site (*http://www.archives.gov/nhprc*) at least three months before the final application due date.

(c) The NHPRC staff publishes notice of each announcement on *http://www.grants.gov*, a Federal government Web site widely available to the public, at least three months before the final application due date.

[71 FR 27624, May 12, 2006, as amended at 75 FR 66317, Oct. 28, 2010]

### § 1206.11 How may an applicant apply for an NHPRC grant?

Applicants may apply for a grant using Grants.gov or by using other electronic or paper forms and documents, according to the instructions in each announcement.

### § 1206.12 What are my responsibilities once I have received a grant?

(a) Comply with all Federal regulations about grants administration that are contained in § 1206.72.

(b) Comply with NHPRC grant announcements and other Commission guidance.

(c) Meet performance requirements defined in your grant application.

(d) Report on performance requirements defined in your grant application and other performance measures specified in the grant award.

(e) Comply with conditions set by the Commission according to § 1206.52.

[71 FR 27624, May 12, 2006, as amended at 75 FR 66317, Oct. 28, 2010]

## Subpart B—Publications Grants

### § 1206.20 What are the scope and purpose of publications grants?

Publications grants support projects intended to make widely available those documentary source materials important to the study and understanding of United States history. In order to receive a publications grant, a project must intend to publish historical records of national value and interest.

### § 1206.22 What type of proposal is eligible for a publications grant?

(a) The Commission provides grants for publishing papers of United States leaders and historical records relating to outstanding events, topics, themes, or movements of national significance in United States history. These projects include the production of:

(1) Documentary editions that involve collecting, compiling, transcribing, editing, annotating, and publishing, either selectively or comprehensively, historical papers and records;

(2) Microfilm editions consisting of organized collections of images of original sources, usually without transcription and annotations;

(3) Electronic editions consisting of organized collections of images of original editions. Electronic editions may include transcriptions and/or annotations and other data to facilitate document discovery;

(4) Electronic editions of transcribed and annotated documents, including electronic republications of hard copy editions; and

(5) Any combination of editions specified in paragraphs (a)(1) through (a)(4) of this section.

(b) The Commission may also support projects to develop methods, tools, techniques, and practices to improve and advance the documentary editing profession in the United States, and to support projects that apply information technology to publishing projects.

(c) The Commission may also support subvention grants to nonprofit presses to help defray publication costs of NHPRC-supported or endorsed editions.

(d) The Commission may also support fellowships, institutes, and other professional development opportunities related to this program.

(e) Detailed programmatic requirements established by the Commission are found in the grant opportunity announcements.

### § 1206.24 What type of proposal is ineligible for a publications grant?

(a) The Commission does not support:

(1) Historical research apart from what is necessary for editing documentary publications; or

(2) Documentary editing projects to publish the papers of someone who has been deceased for fewer than ten years.

(b) Other programmatic limitations established by the Commission are found in the grant opportunity announcements.

[71 FR 27624, May 12, 2006, as amended at 75 FR 66317, Oct. 28, 2010]

## Subpart C—Records Grants

### § 1206.30 What is the scope and purpose of records grants?

(a) Records grants support projects designed to preserve and facilitate use of historical records of national, state, or local significance for the purpose of furthering an understanding and appreciation of United States history and assuring the rights of American citizens to free and equal access to government records.

(b) The Commission also supports projects to develop methods, tools, techniques, and practices to improve and advance the archival profession in the United States, and to support continuing education of archivists, records managers, and other keepers of historical records.

### § 1206.32 What type of proposal is eligible for a records grant?

(a) The Commission provides grants to historical records repositories for locating, preserving and encouraging use of records held by State, local, and other governmental units and private archives and collections of papers maintained in non-Federal, nonprofit repositories and special collections relating to the study of American history.

(b) The Commission provides support to historical records repositories and other institutions for:

(1) Advancing the state of the art in archival and records management and in the long-term maintenance of, and easy access to, authentic electronic records;

(2) Promoting cooperative efforts among institutions and organizations in archival and records management;

(3) Improving the knowledge, performance, and professional skills of those who work with historical records; and

(4) Continuing archival education, including fellowships, institutes, and symposia.

[71 FR 27624, May 12, 2006, as amended at 75 FR 66317, Oct. 28, 2010]

### § 1206.34 What type of proposal is ineligible for a records grant?

In addition to other programmatic limitations established by the Commission as found in the grant opportunity announcements, NHPRC does not support proposals:

(a) For building projects;

(b) To purchase manuscripts or historical records;

(c) For projects involving substantial work with artifacts, library materials, or works of art; or

(d) For exhibits or celebrations, reenactments, and other observations of historical events.

[71 FR 27624, May 12, 2006, as amended at 75 FR 66318, Oct. 28, 2010]

## Subpart D—State Records Program

### § 1206.40 What is a State records program?

(a) Each State is eligible to receive NHPRC grants to support the work of the State historical records advisory board (board); to operate statewide historical records services; and to make sub-grants to eligible organizations within the State in support of historical records activities.

(b) Boards review and comment on applications for NHPRC records projects grants submitted from their states, according to The Manual of Suggested Practices.

[71 FR 27624, May 12, 2006, as amended at 75 FR 66318, Oct. 28, 2010]

### § 1206.41 What is a state historical records advisory board and how is it constituted?

(a) *Responsibilities.* The board is the central advisory body for historical records coordination within the State and for NHPRC State and local records projects within the State. The board

engages in planning; it develops, revises, and submits to the Commission a State plan including priorities for State historical records projects following ''The Manual of Suggested Practices.'' The board reviews all State and local records projects within the State and makes recommendations for State projects to the Commission.

(b) *Appointments*. Each State participating in the NHPRC State program must adopt an appointment process and appoint a board following ''The Manual of Suggested Practices.'' The appointment process and membership must be reported at least annually to the Commission. A majority of members should have recognizable experience in the administration of records, manuscripts, or archives. The board should be as broadly representative as possible of the public and private archives, records offices, and research institutions and organizations in the State.

[71 FR 27624, May 12, 2006, as amended at 75 FR 66318, Oct. 28, 2010]

### § 1206.42 What is a State Coordinator?

(a) *Duties*. The State coordinator (coordinator) is the officer responsible for the NHPRC State program. He or she reports the State board appointment process, membership and recommendations to the NHPRC at least on an annual basis and may serve as chair of the board and may perform other duties following applicable State statute or regulation and ''The Manual of Suggested Practices.''

(b) *Appointment*. The coordinator should be the full-time professional official in charge of the State archival program or agency, unless otherwise specified in State statute or regulation. The coordinator serves *ex officio*, unless otherwise specified in State statute or regulation. The coordinator is not deemed to be an official or employee of the Federal Government and receives no Federal compensation for such service.

(c) *Replacement*. In the absence of a deputy coordinator, the State board may select an acting coordinator until another coordinator is appointed, in order to conduct the necessary business of the board.

[71 FR 27624, May 12, 2006, as amended at 75 FR 66318, Oct. 28, 2010]

### § 1206.43 What are the duties of the deputy State coordinator?

The coordinator may designate a deputy State coordinator to assist in carrying out the duties and responsibilities of the coordinator and to serve as an acting coordinator at the coordinator's direction or upon the coordinator's resignation or inability to serve.

[71 FR 27624, May 12, 2006, as amended at 75 FR 66318, Oct. 28, 2010]

### § 1206.44 Who is eligible for sub-grants?

All organizations located within a State that has an active State historical records board and entities defined in § 1206.54 may be eligible, as determined by the board.

[75 FR 66318, Oct. 28, 2010]

### § 1206.45 What rules govern sub-grant distribution, cost sharing, grant administration, and reporting?

(a) The Commission will annually establish guidance published in the grant opportunity announcement for State grants regarding:

(1) The distribution of re-grant funds;

(2) Cost sharing and matching requirements; and

(3) Reporting.

(b) Each participating State is responsible for ensuring that the sub-grantees comply with Federal grant administration and reporting requirements.

(c) Each participating State must annually prepare a report to the NHPRC on its sub-grant program, following the requirements outlined in § 1206.80.

[71 FR 27624, May 12, 2006, as amended at 75 FR 66318, Oct. 28, 2010]

## Subpart E—Applying for NHPRC Grants

### § 1206.50 What types of funding and cost sharing arrangements does the Commission make?

(a) *Types of grants*. (1) *Matching grant*. A matching grant is a Federal grant awarded only after the applicant raises

its share of non-Federal support for a project. We will match only funds raised from non-Federal sources, either monies provided by the applicant's own institution specifically for the project or from a non-Federal third-party source. The Commission does not ordinarily make matching grants.

(2) *Outright grant.* Outright grants are those awards we make without any matching requirement. However, outright grants usually include a cost-sharing requirement.

(b) *Cost sharing.* (1) Cost sharing consists of the applicant's contribution to the cost of the project. The Commission ordinarily expects the applicant to provide cost sharing in an amount equal to the amount of the Federal grant award. Exceptions to the one-to-one cost sharing requirement may be set by the Commission in specific grant opportunity announcements.

(2) Cost sharing may include cash or in-kind contributions provided by the applicant or by a non-Federal third party.

(3) We prefer the applicant cover indirect costs through cost sharing.

[71 FR 27624, May 12, 2006, as amended at 75 FR 66318, Oct. 28, 2010]

### § 1206.52 Does the Commission ever place conditions on its grants?

Yes, the Commission may place certain conditions on its grants. The Commission describes applicable conditions in each grant opportunity announcement.

[71 FR 27624, May 12, 2006, as amended at 75 FR 66318, Oct. 28, 2010]

### § 1206.54 Who may apply for NHPRC grants?

The Commission will consider applications from State government agencies in States where there is an active board; local government agencies; United States nonprofit organizations and institutions, including institutions of higher education; or Federally-acknowledged and State-recognized American Indian tribes or groups.

[75 FR 66318, Oct. 28, 2010]

### § 1206.56 When are applications due?

The Commission generally meets twice a year, and considers grant proposals submitted by the deadlines set by the Commission. The deadlines are published in each grant opportunity announcement and at *http://www.grants.gov*. All proposals must be submitted by the published deadline.

[75 FR 66318, Oct. 28, 2010]

### § 1206.58 How do I apply for a grant?

(a) *Contact the NHPRC staff.* The Commission encourages you to discuss your proposal through correspondence, by phone, or in person with NHPRC staff.

(b) *Contact your State Historical Records Advisory Board as appropriate.* NHPRC encourages you to discuss your proposal with your State historical records coordinator at all stages of your proposal's development and before you submit the proposal.

(1) Contact is not necessary if:

(i) Your proposal is for publications or subvention projects; or

(ii) You are an American Indian tribe.

(2) You will find the staff contacts and a list of State historical records coordinators on the Commission's Web site at *http://www.archives.gov/nhprc*.

[71 FR 27624, May 12, 2006, as amended at 75 FR 66318, Oct. 28, 2010]

### § 1206.60 What must I provide as a formal grant application?

The forms and other documents you must submit are listed with each grant opportunity announcement on the NHPRC web site. OMB Control Number 3095–0013 has been assigned to this information collection.

[71 FR 27624, May 12, 2006, as amended at 75 FR 66319, Oct. 28, 2010]

### § 1206.62 Who reviews and evaluates grant proposals?

(a) *State boards.* State historical records advisory boards may evaluate your proposal according to Commission grant opportunity announcements.

(b) *Peer reviewers.* The NHPRC staff may ask external peer reviewers to evaluate the proposal according to Commission grant announcements.

(c) *Other reviewers.* The Commission staff may require additional reviews.

(d) *NHPRC staff.* NHPRC staff analyzes the reviewers' comments, and

considers the appropriateness of the project toward fulfilling Commission goals, the proposal's completeness and conformity to application requirements. The staff, through a questions letter or email to you, raises issues and concerns and allows you the opportunity to respond. The staff makes recommendations to the Commission.

(e) *The Commission*. The Commission deliberates on all eligible proposals and recommends to the Archivist of the United States what action to take on each (fund, partially fund, endorse, reject, resubmit). By statute the Archivist chairs the Commission and has final authority to make or deny a grant.

### § 1206.64 What formal notification will I receive, and will it contain other information?

(a) Successful grant applicants will receive a formal grant award document. The document and attachments specify terms of the grant. NHPRC staff notifies project directors informally of awards and any conditions soon after the Archivist approves the grants.

(b) The grant period begins and ends on the dates specified in the award document.

[71 FR 27624, May 12, 2006, as amended at 75 FR 66319, Oct. 28, 2010]

## Subpart F—Grant Administration

### § 1206.70 Who is responsible for administration of NHPRC grants?

The grantee institution and the institution-designated project director share primary responsibility for the administration of grants.

[71 FR 27624, May 12, 2006, as amended at 75 FR 66318, Oct. 28, 2010]

### § 1206.72 Where can I find the regulatory requirements that apply to NHPRC grants?

(a) In addition to this Part 1206, NARA has issued other regulations that apply to NHPRC grants in 36 CFR Parts 1200 to 1212 and 2 CFR Part 2600. NARA also applies the principles and standards in the following regulations and Office of Management and Budget (OMB) Circular for NHPRC grants:

(1) 2 CFR Part 25 Universal Identifier and Central Contractor Registration;

(2) 2 CFR Part 170 Reporting Subaward and Executive Compensation Information;

(3) 2 CFR Part 220 Cost Principles for Educational Institutions (OMB Circular A–21);

(4) 2 CFR Part 225 Cost Principles for State, Local, and Indian Tribal Governments (OMB Circular A–87);

(5) 2 CFR Part 230 Cost Principles for Non-Profit Organizations (OMB Circular A–122); and

(6) OMB Circular A–133, ''Audits of States, Local Governments, and Nonprofit Organizations.'' This circular is available at *http://www.whitehouse.gov/omb/circulars_default*.

(b) The OMB Circulars are available at *http://www.whitehouse.gov/omb/circulars/index.html*.

(c) Additional policy guidance related to Title VI of the Civil Rights Act of 1964, regarding persons with limited English proficiency, is provided in Commission guidance at *http://www.archives.gov/nhprc/* and from the NHPRC staff.

[71 FR 27624, May 12, 2006, as amended at 72 FR 2768, Jan. 23, 2007; 75 FR 66319, Oct. 28, 2010]

### § 1206.74 Do I need prior written approval for changes to the grant project?

You must obtain prior written approval from the NHPRC for most changes in the grant project and terms of the grant. Detailed instructions are found in *How to Administer an NHPRC Grant* available at *http://www.archives.gov/NHPRC* or from the NHPRC staff.

[71 FR 27624, May 12, 2006, as amended at 75 FR 66319, Oct. 28, 2010]

### § 1206.76 May I receive an extension to my grant project?

Yes, requests for extensions of the grant period should be signed by the grantee's authorized representative and submitted not more than two months before the scheduled end of the grant period. The NHPRC will not allow extensions unless a project is up-

to-date in its submission of financial and narrative reports.

[75 FR 66319, Oct. 28, 2010]

### § 1206.80 What reports am I required to make?

(a) Grant recipients are generally required to submit annual financial reports and semi-annual narrative progress reports, as well as final financial and narrative reports at the conclusion of the grant period. The grant award document will specify the dates on which your reports are due. In order to fulfill its oversight and monitoring responsibilities, the NHPRC or Commission may require additional reports or information at any time during the grant. OMB Control Number 3095–0013 has been assigned to this information collection.

(b) Detailed reporting requirements are found in *How to Administer an NHPRC Grant* available at *http://www.archives.gov/NHPRC* or from the NHPRC staff.

[71 FR 27624, May 12, 2006, as amended at 75 FR 66319, Oct. 28, 2010]

### § 1206.82 What is the format and content of the financial report?

Grant recipients must submit financial reports on Standard Form 425 and have them signed by the grantee's authorized representative or by an appropriate institutional fiscal officer.

[75 FR 66319, Oct. 28, 2010]

### § 1206.84 What is the format and content of the narrative report?

(a) Interim narrative reports should state briefly the performance objectives and activities for the entire grant and then focus on those accomplished during the reporting period. The report should include a summary of project activities; whether the project proceeded on schedule; any revisions of the work plan, staffing pattern, or budget; any web address created by the project; and any other press releases, articles, or presentations relating to the grant project or its products. It should include an analysis of the objectives met during the reporting period and any objectives for the period that were not accomplished. For documentary editing projects, it also must include information about the publication of volumes and the completion of finding aids, as well as any work that is pending with publishers.

(b) The final report must provide a detailed assessment of the entire project, following the format in paragraph (a) of this section, including whether the performance objectives and goals set in the original proposal were realistic; whether there were unpredicted results or outcomes; whether the project encountered unexpected problems and how you faced them; and how you could have improved the project. You must discuss the project's impact, if any, on the grant-receiving institution and others. You must indicate whether all or part of the project activities will be continued after the end of the grant, whether any of these activities will be supported by institutional funds or by grant funds, and if the NHPRC grant was instrumental in obtaining these funds.

[71 FR 27624, May 12, 2006, as amended at 75 FR 66319, Oct. 28, 2010]

### § 1206.86 What additional materials must I submit with the final narrative report?

You must submit the materials required in the NHPRC grant announcements and in the grant award document.

[75 FR 66319, Oct. 28, 2010]

### § 1206.88 Does the NHPRC have any liability under a grant?

No, NARA and the Commission cannot assume any liability for accidents, illnesses, or claims arising out of any work undertaken with the assistance of the grant.

[71 FR 27624, May 12, 2006, as amended at 75 FR 66319, Oct. 28, 2010]

### § 1206.90 Must I acknowledge NHPRC grant support?

Yes, grantee institutions, grant project directors, or grant staff personnel may publish results of any work supported by an NHPRC grant without review by the Commission; however, publications or other products resulting from the project must acknowledge the assistance of the NHPRC grant and

all copies paid for by grant funds must be distributed at a reasonable cost.

# PART 1207—UNIFORM ADMINISTRATIVE REQUIREMENTS FOR GRANTS AND COOPERATIVE AGREEMENTS TO STATE AND LOCAL GOVERNMENTS

## Subpart A—General

Sec.
1207.1 Purpose and scope of this part.
1207.2 Scope of subpart.
1207.3 Definitions.
1207.4 Applicability.
1207.5 Effect on other issuances.
1207.6 Additions and exceptions.

## Subpart B—Pre-Award Requirements

1207.10 Forms for applying for grants.
1207.11 State plans.
1207.12 Special grant or subgrant conditions for ''high-risk'' grantees.

## Subpart C—Post-Award Requirements

FINANCIAL ADMINISTRATION

1207.20 Standards for financial management systems.
1207.21 Payment.
1207.22 Allowable costs.
1207.23 Period of availability of funds.
1207.24 Matching or cost sharing.
1207.25 Program income.
1207.26 Non-Federal audit.

CHANGES, PROPERTY, AND SUBAWARDS

1207.30 Changes.
1207.31 Real property.
1207.32 Equipment.
1207.33 Supplies.
1207.34 Copyrights.
1207.35 Subawards to debarred and suspended parties.
1207.36 Procurement.
1207.37 Subgrants.

REPORTS, RECORDS, RETENTION, AND ENFORCEMENT

1207.40 Monitoring and reporting program performance.
1207.41 Financial reporting.
1207.42 Retention and access requirements for records.
1207.43 Enforcement.
1207.44 Termination for convenience.

## Subpart D—After-the-Grant Requirements

1207.50 Closeout.
1207.51 Later disallowances and adjustments.
1207.52 Collection of amounts due.

## Subpart E—Entitlement [Reserved]

AUTHORITY: 44 U.S.C. 2104(a); 44 U.S.C. 2501–2506.

SOURCE: 53 FR 8072, 8087, Mar. 11, 1988, unless otherwise noted.

## Subpart A—General

### § 1207.1 Purpose and scope of this part.

This part establishes uniform administrative rules for Federal grants and cooperative agreements and subawards to State, local and Indian tribal governments.

### § 1207.2 Scope of subpart.

This subpart contains general rules pertaining to this part and procedures for control of exceptions from this part.

### § 1207.3 Definitions.

As used in this part:

*Accrued expenditures* mean the charges incurred by the grantee during a given period requiring the provision of funds for: (1) Goods and other tangible property received; (2) services performed by employees, contractors, subgrantees, subcontractors, and other payees; and (3) other amounts becoming owed under programs for which no current services or performance is required, such as annuities, insurance claims, and other benefit payments.

*Accrued income* means the sum of: (1) Earnings during a given period from services performed by the grantee and goods and other tangible property delivered to purchasers, and (2) amounts becoming owed to the grantee for which no current services or performance is required by the grantee.

*Acquisition cost* of an item of purchased equipment means the net invoice unit price of the property including the cost of modifications, attachments, accessories, or auxiliary apparatus necessary to make the property usable for the purpose for which it was acquired. Other charges such as the cost of installation, transportation, taxes, duty or protective in-transit insurance, shall be included or excluded from the unit acquisition cost in accordance with the grantee's regular accounting practices.

*Administrative* requirements mean those matters common to grants in general, such as financial management, kinds and frequency of reports, and retention of records. These are distinguished from *programmatic* requirements, which concern matters that can be treated only on a program-by-program or grant-by-grant basis, such as kinds of activities that can be supported by grants under a particular program.

*Awarding agency* means (1) with respect to a grant, the Federal agency, and (2) with respect to a subgrant, the party that awarded the subgrant.

*Cash contributions* means the grantee's cash outlay, including the outlay of money contributed to the grantee or subgrantee by other public agencies and institutions, and private organizations and individuals. When authorized by Federal legislation, Federal funds received from other assistance agreements may be considered as grantee or subgrantee cash contributions.

*Contract* means (except as used in the definitions for *grant* and *subgrant* in this section and except where qualified by *Federal*) a procurement contract under a grant or subgrant, and means a procurement subcontract under a contract.

*Cost sharing or matching* means the value of the third party in-kind contributions and the portion of the costs of a federally assisted project or program not borne by the Federal Government.

*Cost-type contract* means a contract or subcontract under a grant in which the contractor or subcontractor is paid on the basis of the costs it incurs, with or without a fee.

*Equipment* means tangible, nonexpendable, personal property having a useful life of more than one year and an acquisition cost of $5,000 or more per unit. A grantee may use its own definition of equipment provided that such definition would at least include all equipment defined above.

*Expenditure report* means: (1) For nonconstruction grants, the SF–269 ''Financial Status Report'' (or other equivalent report); (2) for construction grants, the SF–271 ''Outlay Report and Request for Reimbursement'' (or other equivalent report).

*Federally recognized Indian tribal government* means the governing body or a governmental agency of any Indian tribe, band, nation, or other organized group or community (including any Native village as defined in section 3 of the Alaska Native Claims Settlement Act, 85 Stat 688) certified by the Secretary of the Interior as eligible for the special programs and services provided by him through the Bureau of Indian Affairs.

*Government* means a State or local government or a federally recognized Indian tribal government.

*Grant* means an award of financial assistance, including cooperative agreements, in the form of money, or property in lieu of money, by the Federal Government to an eligible grantee. The term does not include technical assistance which provides services instead of money, or other assistance in the form of revenue sharing, loans, loan guarantees, interest subsidies, insurance, or direct appropriations. Also, the term does not include assistance, such as a fellowship or other lump sum award, which the grantee is not required to account for.

*Grantee* means the government to which a grant is awarded and which is accountable for the use of the funds provided. The grantee is the entire legal entity even if only a particular component of the entity is designated in the grant award document.

*Local government* means a county, municipality, city, town, township, local public authority (including any public and Indian housing agency under the United States Housing Act of 1937) school district, special district, intrastate district, council of governments (whether or not incorporated as a nonprofit corporation under state law), any other regional or interstate government entity, or any agency or instrumentality of a local government.

*Obligations* means the amounts of orders placed, contracts and subgrants awarded, goods and services received, and similar transactions during a given period that will require payment by the grantee during the same or a future period.

*OMB* means the United States Office of Management and Budget.

*Outlays* (expenditures) mean charges made to the project or program. They may be reported on a cash or accrual basis. For reports prepared on a cash basis, outlays are the sum of actual cash disbursement for direct charges for goods and services, the amount of indirect expense incurred, the value of in-kind contributions applied, and the amount of cash advances and payments made to contractors and subgrantees. For reports prepared on an accrued expenditure basis, outlays are the sum of actual cash disbursements, the amount of indirect expense incurred, the value of inkind contributions applied, and the new increase (or decrease) in the amounts owed by the grantee for goods and other property received, for services performed by employees, contractors, subgrantees, subcontractors, and other payees, and other amounts becoming owed under programs for which no current services or performance are required, such as annuities, insurance claims, and other benefit payments.

*Percentage of completion method* refers to a system under which payments are made for construction work according to the percentage of completion of the work, rather than to the grantee's cost incurred.

*Prior approval* means documentation evidencing consent prior to incurring specific cost.

*Real property* means land, including land improvements, structures and appurtenances thereto, excluding movable machinery and equipment.

*Share*, when referring to the awarding agency's portion of real property, equipment or supplies, means the same percentage as the awarding agency's portion of the acquiring party's total costs under the grant to which the acquisition costs under the grant to which the acquisition cost of the property was charged. Only costs are to be counted—not the value of third-party in-kind contributions.

*State* means any of the several States of the United States, the District of Columbia, the Commonwealth of Puerto Rico, any territory or possession of the United States, or any agency or instrumentality of a State exclusive of local governments. The term does not include any public and Indian housing agency under United States Housing Act of 1937.

*Subgrant* means an award of financial assistance in the form of money, or property in lieu of money, made under a grant by a grantee to an eligible subgrantee. The term includes financial assistance when provided by contractual legal agreement, but does not include procurement purchases, nor does it include any form of assistance which is excluded from the definition of *grant* in this part.

*Subgrantee* means the government or other legal entity to which a subgrant is awarded and which is accountable to the grantee for the use of the funds provided.

*Supplies* means all tangible personal property other than *equipment* as defined in this part.

*Suspension* means depending on the context, either (1) temporary withdrawal of the authority to obligate grant funds pending corrective action by the grantee or subgrantee or a decision to terminate the grant, or (2) an action taken by a suspending official in accordance with agency regulations implementing E.O. 12549 to immediately exclude a person from participating in grant transactions for a period, pending completion of an investigation and such legal or debarment proceedings as may ensue.

*Termination* means permanent withdrawal of the authority to obligate previously-awarded grant funds before that authority would otherwise expire. It also means the voluntary relinquishment of that authority by the grantee or subgrantee. *Termination* does not include: (1) Withdrawal of funds awarded on the basis of the grantee's underestimate of the unobligated balance in a prior period; (2) withdrawal of the unobligated balance as of the expiration of a grant; (3) refusal to extend a grant or award additional funds, to make a competing or noncompeting continuation, renewal, extension, or supplemental award; or (4) voiding of a grant upon determination that the award was obtained fraudulently, or was otherwise illegal or invalid from inception.

*Terms of a grant or subgrant* mean all requirements of the grant or subgrant, whether in statute, regulations, or the award document.

*Third party in-kind contributions* mean property or services which benefit a federally assisted project or program and which are contributed by non-Federal third parties without charge to the grantee, or a cost-type contractor under the grant agreement.

*Unliquidated obligations* for reports prepared on a cash basis mean the amount of obligations incurred by the grantee that has not been paid. For reports prepared on an accrued expenditure basis, they represent the amount of obligations incurred by the grantee for which an outlay has not been recorded.

*Unobligated balance* means the portion of the funds authorized by the Federal agency that has not been obligated by the grantee and is determined by deducting the cumulative obligations from the cumulative funds authorized.

**§ 1207.4 Applicability.**

(a) *General.* Subparts A through D of this part apply to all grants and subgrants to governments, except where inconsistent with Federal statutes or with regulations authorized in accordance with the exception provision of § 1207.6, or:

(1) Grants and subgrants to State and local institutions of higher education or State and local hospitals.

(2) The block grants authorized by the Omnibus Budget Reconciliation Act of 1981 (Community Services; Preventive Health and Health Services; Alcohol, Drug Abuse, and Mental Health Services; Maternal and Child Health Services; Social Services; Low-Income Home Energy Assistance; States' Program of Community Development Block Grants for Small Cities; and Elementary and Secondary Education other than programs administered by the Secretary of Education under title V, subtitle D, chapter 2, section 583—the Secretary's discretionary grant program) and titles I-III of the Job Training Partnership Act of 1982 and under the Public Health Services Act (section 1921), Alcohol and Drug Abuse Treatment and Rehabilitation Block Grant and part C of title V, Mental Health Service for the Homeless Block Grant).

(3) Entitlement grants to carry out the following programs of the Social Security Act:

(i) Aid to Needy Families with Dependent Children (title IV-A of the Act, not including the Work Incentive Program (WIN) authorized by section 402(a)19(G); HHS grants for WIN are subject to this part);

(ii) Child Support Enforcement and Establishment of Paternity (title IV-D of the Act);

(iii) Foster Care and Adoption Assistance (title IV-E of the Act);

(iv) Aid to the Aged, Blind, and Disabled (titles I, X, XIV, and XVI-AABD of the Act); and

(v) Medical Assistance (Medicaid) (title XIX of the Act) not including the State Medicaid Fraud Control program authorized by section 1903(a)(6)(B).

(4) Entitlement grants under the following programs of The National School Lunch Act:

(i) School Lunch (section 4 of the Act),

(ii) Commodity Assistance (section 6 of the Act),

(iii) Special Meal Assistance (section 11 of the Act),

(iv) Summer Food Service for Children (section 13 of the Act), and

(v) Child Care Food Program (section 17 of the Act).

(5) Entitlement grants under the following programs of The Child Nutrition Act of 1966:

(i) Special Milk (section 3 of the Act), and

(ii) School Breakfast (section 4 of the Act).

(6) Entitlement grants for State Administrative expenses under The Food Stamp Act of 1977 (section 16 of the Act).

(7) A grant for an experimental, pilot, or demonstration project that is also supported by a grant listed in paragraph (a)(3) of this section;

(8) Grant funds awarded under subsection 412(e) of the Immigration and Nationality Act (8 U.S.C. 1522(e)) and subsection 501(a) of the Refugee Education Assistance Act of 1980 (Pub. L.

96–422, 94 Stat. 1809), for cash assistance, medical assistance, and supplemental security income benefits to refugees and entrants and the administrative costs of providing the assistance and benefits;

(9) Grants to local education agencies under 20 U.S.C. 236 through 241–1(a), and 242 through 244 (portions of the Impact Aid program), except for 20 U.S.C. 238(d)(2)(c) and 240(f) (Entitlement Increase for Handicapped Children); and

(10) Payments under the Veterans Administration's State Home Per Diem Program (38 U.S.C. 641(a)).

(b) *Entitlement programs.* Entitlement programs enumerated above in § 1207.4(a) (3) through (8) are subject to subpart E.

### § 1207.5 Effect on other issuances.

All other grants administration provisions of codified program regulations, program manuals, handbooks and other nonregulatory materials which are inconsistent with this part are superseded, except to the extent they are required by statute, or authorized in accordance with the exception provision in § 1207.6.

### § 1207.6 Additions and exceptions

(a) For classes of grants and grantees subject to this part, Federal agencies may not impose additional administrative requirements except in codified regulations published in the FEDERAL REGISTER.

(b) Exceptions for classes of grants or grantees may be authorized only by OMB.

(c) Exceptions on a case-by-case basis and for subgrantees may be authorized by the affected Federal agencies.

## Subpart B—Pre-Award Requirements

### § 1207.10 Forms for applying for grants.

(a) *Scope.* (1) This section prescribes forms and instructions to be used by governmental organizations (except hospitals and institutions of higher education operated by a government) in applying for grants. This section is not applicable, however, to formula grant programs which do not require applicants to apply for funds on a project basis.

(2) This section applies only to applications to Federal agencies for grants, and is not required to be applied by grantees in dealing with applicants for subgrants. However, grantees are encouraged to avoid more detailed or burdensome application requirements for subgrants.

(b) *Authorized forms and instructions for governmental organizations.* (1) In applying for grants, applicants shall only use standard application forms or those prescribed by the granting agency with the approval of OMB under the Paperwork Reduction Act of 1980.

(2) Applicants are not required to submit more than the original and two copies of preapplications or applications.

(3) Applicants must follow all applicable instructions that bear OMB clearance numbers. Federal agencies may specify and describe the programs, functions, or activities that will be used to plan, budget, and evaluate the work under a grant. Other supplementary instructions may be issued only with the approval of OMB to the extent required under the Paperwork Reduction Act of 1980. For any standard form, except the SF–424 facesheet, Federal agencies may shade out or instruct the applicant to disregard any line item that is not needed.

(4) When a grantee applies for additional funding (such as a continuation or supplemental award) or amends a previously submitted application, only the affected pages need be submitted. Previously submitted pages with information that is still current need not be resubmitted.

### § 1207.11 State plans.

(a) *Scope.* The statutes for some programs require States to submit plans before receiving grants. Under regulations implementing Executive Order 12372, ''Intergovernmental Review of Federal Programs,'' States are allowed to simplify, consolidate and substitute plans. This section contains additional provisions for plans that are subject to regulations implementing the Executive order.

(b) *Requirements.* A State need meet only Federal administrative or programmatic requirements for a plan that are in statutes or codified regulations.

(c) *Assurances.* In each plan the State will include an assurance that the State shall comply with all applicable Federal statutes and regulations in effect with respect to the periods for which it receives grant funding. For this assurance and other assurances required in the plan, the State may:

(1) Cite by number the statutory or regulatory provisions requiring the assurances and affirm that it gives the assurances required by those provisions,

(2) Repeat the assurance language in the statutes or regulations, or

(3) Develop its own language to the extent permitted by law.

(d) *Amendments.* A State will amend a plan whenever necessary to reflect: (1) New or revised Federal statutes or regulations or (2) a material change in any State law, organization, policy, or State agency operation. The State will obtain approval for the amendment and its effective date but need submit for approval only the amended portions of the plan.

### § 1207.12 Special grant or subgrant conditions for "high-risk" grantees.

(a) A grantee or subgrantee may be considered ''high risk'' if an awarding agency determines that a grantee or subgrantee:

(1) Has a history of unsatisfactory performance, or

(2) Is not financially stable, or

(3) Has a management system which does not meet the management standards set forth in this part, or

(4) Has not conformed to terms and conditions of previous awards, or

(5) Is otherwise not responsible; and if the awarding agency determines that an award will be made, special conditions and/or restrictions shall correspond to the high risk condition and shall be included in the award.

(b) Special conditions or restrictions may include:

(1) Payment on a reimbursement basis;

(2) Withholding authority to proceed to the next phase until receipt of evidence of acceptable performance within a given funding period;

(3) Requiring additional, more detailed financial reports;

(4) Additional project monitoring;

(5) Requiring the grante or subgrantee to obtain technical or management assistance; or

(6) Establishing additional prior approvals.

(c) If an awarding agency decides to impose such conditions, the awarding official will notify the grantee or subgrantee as early as possible, in writing, of:

(1) The nature of the special conditions/restrictions;

(2) The reason(s) for imposing them;

(3) The corrective actions which must be taken before they will be removed and the time allowed for completing the corrective actions and

(4) The method of requesting reconsideration of the conditions/restrictions imposed.

## Subpart C—Post-Award Requirements

FINANCIAL ADMINISTRATION

### § 1207.20 Standards for financial management systems.

(a) A State must expand and account for grant funds in accordance with State laws and procedures for expending and accounting for its own funds. Fiscal control and accounting procedures of the State, as well as its subgrantees and cost-type contractors, must be sufficient to—

(1) Permit preparation of reports required by this part and the statutes authorizing the grant, and

(2) Permit the tracing of funds to a level of expenditures adequate to establish that such funds have not been used in violation of the restrictions and prohibitions of applicable statutes.

(b) The financial management systems of other grantees and subgrantees must meet the following standards:

(1) *Financial reporting.* Accurate, current, and complete disclosure of the financial results of financially assisted activities must be made in accordance with the financial reporting requirements of the grant or subgrant.

(2) *Accounting records.* Grantees and subgrantees must maintain records which adequately identify the source and application of funds provided for financially-assisted activities. These records must contain information pertaining to grant or subgrant awards and authorizations, obligations, unobligated balances, assets, liabilities, outlays or expenditures, and income.

(3) *Internal control.* Effective control and accountability must be maintained for all grant and subgrant cash, real and personal property, and other assets. Grantees and subgrantees must adequately safeguard all such property and must assure that it is used solely for authorized purposes.

(4) *Budget control.* Actual expenditures or outlays must be compared with budgeted amounts for each grant or subgrant. Financial information must be related to performance or productivity data, including the development of unit cost information whenever appropriate or specifically required in the grant or subgrant agreement. If unit cost data are required, estimates based on available documentation will be accepted whenever possible.

(5) *Allowable cost.* Applicable OMB cost principles, agency program regulations, and the terms of grant and subgrant agreements will be followed in determining the reasonableness, allowability, and allocability of costs.

(6) *Source documentation.* Accounting records must be supported by such source documentation as cancelled checks, paid bills, payrolls, time and attendance records, contract and subgrant award documents, etc.

(7) *Cash management.* Procedures for minimizing the time elapsing between the transfer of funds from the U.S. Treasury and disbursement by grantees and subgrantees must be followed whenever advance payment procedures are used. Grantees must establish reasonable procedures to ensure the receipt of reports on subgrantees' cash balances and cash disbursements in sufficient time to enable them to prepare complete and accurate cash transactions reports to the awarding agency. When advances are made by letter-of-credit or electronic transfer of funds methods, the grantee must make drawdowns as close as possible to the time of making disbursements. Grantees must monitor cash drawdowns by their subgrantees to assure that they conform substantially to the same standards of timing and amount as apply to advances to the grantees.

(c) An awarding agency may review the adequacy of the financial management system of any applicant for financial assistance as part of a preaward review or at any time subsequent to award.

### § 1207.21 Payment.

(a) *Scope.* This section prescribes the basic standard and the methods under which a Federal agency will make payments to grantees, and grantees will make payments to subgrantees and contractors.

(b) *Basic standard.* Methods and procedures for payment shall minimize the time elapsing between the transfer of funds and disbursement by the grantee or subgrantee, in accordance with Treasury regulations at 31 CFR part 205.

(c) *Advances.* Grantees and subgrantees shall be paid in advance, provided they maintain or demonstrate the willingness and ability to maintain procedures to minimize the time elapsing between the transfer of the funds and their disbursement by the grantee or subgrantee.

(d) *Reimbursement.* Reimbursement shall be the preferred method when the requirements in paragraph (c) of this section are not met. Grantees and subgrantees may also be paid by reimbursement for any construction grant. Except as otherwise specified in regulation, Federal agencies shall not use the percentage of completion method to pay construction grants. The grantee or subgrantee may use that method to pay its construction contractor, and if it does, the awarding agency's payments to the grantee or subgrantee will be based on the grantee's or subgrantee's actual rate of disbursement.

(e) *Working capital advances.* If a grantee cannot meet the criteria for advance payments described in paragraph (c) of this section, and the Federal agency has determined that reimbursement is not feasible because the

grantee lacks sufficient working capital, the awarding agency may provide cash or a working capital advance basis. Under this procedure the awarding agency shall advance cash to the grantee to cover its estimated disbursement needs for an initial period generally geared to the grantee's disbursing cycle. Thereafter, the awarding agency shall reimburse the grantee for its actual cash disbursements. The working capital advance method of payment shall not be used by grantees or subgrantees if the reason for using such method is the unwillingness or inability of the grantee to provide timely advances to the subgrantee to meet the subgrantee's actual cash disbursements.

(f) *Effect of program income, refunds, and audit recoveries on payment.* (1) Grantees and subgrantees shall disburse repayments to and interest earned on a revolving fund before requesting additional cash payments for the same activity.

(2) Except as provided in paragraph (f)(1) of this section, grantees and subgrantees shall disburse program income, rebates, refunds, contract settlements, audit recoveries and interest earned on such funds before requesting additional cash payments.

(g) *Withholding payments.* (1) Unless otherwise required by Federal statute, awarding agencies shall not withhold payments for proper charges incurred by grantees or subgrantees unless—

(i) The grantee or subgrantee has failed to comply with grant award conditions or

(ii) The grantee or subgrantee is indebted to the United States.

(2) Cash withheld for failure to comply with grant award condition, but without suspension of the grant, shall be released to the grantee upon subsequent compliance. When a grant is suspended, payment adjustments will be made in accordance with § 1207.43(c).

(3) A Federal agency shall not make payment to grantees for amounts that are withheld by grantees or subgrantees from payment to contractors to assure satisfactory completion of work. Payments shall be made by the Federal agency when the grantees or subgrantees actually disburse the withheld funds to the contractors or to escrow accounts established to assure satisfactory completion of work.

(h) *Cash depositories.* (1) Consistent with the national goal of expanding the opportunities for minority business enterprises, grantees and subgrantees are encouraged to use minority banks (a bank which is owned at least 50 percent by minority group members). A list of minority owned banks can be obtained from the Minority Business Development Agency, Department of Commerce, Washington, DC 20230.

(2) A grantee or subgrantee shall maintain a separate bank account only when required by Federal-State agreement.

(i) *Interest earned on advances.* Except for interest earned on advances of funds exempt under the Intergovernmental Cooperation Act (31 U.S.C. 6501 *et seq.*) and the Indian Self-Determination Act (23 U.S.C. 450), grantees and subgrantees shall promptly, but at least quarterly, remit interest earned on advances to the Federal agency. The grantee or subgrantee may keep interest amounts up to $100 per year for administrative expenses.

### § 1207.22 Allowable costs.

(a) *Limitation on use of funds.* Grant funds may be used only for:

(1) The allowable costs of the grantees, subgrantees and cost-type contractors, including allowable costs in the form of payments to fixed-price contractors; and

(2) Reasonable fees or profit to cost-type contractors but not any fee or profit (or other increment above allowable costs) to the grantee or subgrantee.

(b) *Applicable cost principles.* For each kind of organization, there is a set of Federal principles for determining allowable costs. Allowable costs will be determined in accordance with the cost principles applicable to the organization incurring the costs. The following chart lists the kinds of organizations and the applicable cost principles.

| For the costs of a— | Use the principles in— |
|---|---|
| State, local or Indian tribal government. | OMB Circular A–87. |

| For the costs of a— | Use the principles in— |
|---|---|
| Private nonprofit organization other than an (1) institution of higher education, (2) hospital, or (3) organization named in OMB Circular A–122 as not subject to that circular. | OMB Circular A–122. |
| Educational institutions. ..... | OMB Circular A–21. |
| For-profit organization other than a hospital and an organization named in OBM Circular A–122 as not subject to that circular. | 48 CFR part 31. Contract Cost Principles and Procedures, or uniform cost accounting standards that comply with cost principles acceptable to the Federal agency. |

### § 1207.23 Period of availability of funds.

(a) *General*. Where a funding period is specified, a grantee may charge to the award only costs resulting from obligations of the funding period unless carryover of unobligated balances is permitted, in which case the carryover balances may be charged for costs resulting from obligations of the subsequent funding period.

(b) *Liquidation of obligations*. A grantee must liquidate all obligations incurred under the award not later than 90 days after the end of the funding period (or as specified in a program regulation) to coincide with the submission of the annual Financial Status Report (SF–269). The Federal agency may extend this deadline at the request of the grantee.

### § 1207.24 Matching or cost sharing.

(a) *Basic rule: Costs and contributions acceptable*. With the qualifications and exceptions listed in paragraph (b) of this section, a matching or cost sharing requirement may be satisfied by either or both of the following:

(1) Allowable costs incurred by the grantee, subgrantee or a cost-type contractor under the assistance agreement. This includes allowable costs borne by non-Federal grants or by others cash donations from non-Federal third parties.

(2) The value of third party in-kind contributions applicable to the period to which the cost sharing or matching requirements applies.

(b) *Qualifications and exceptions*—(1) *Costs borne by other Federal grant agreements*. Except as provided by Federal statute, a cost sharing or matching requirement may not be met by costs borne by another Federal grant. This prohibition does not apply to income earned by a grantee or subgrantee from a contract awarded under another Federal grant.

(2) *General revenue sharing*. For the purpose of this section, general revenue sharing funds distributed under 31 U.S.C. 6702 are not considered Federal grant funds.

(3) *Cost or contributions counted towards other Federal costs-sharing requirements*. Neither costs nor the values of third party in-kind contributions may count towards satisfying a cost sharing or matching requirement of a grant agreement if they have been or will be counted towards satisfying a cost sharing or matching requirement of another Federal grant agreement, a Federal procurement contract, or any other award of Federal funds.

(4) *Costs financed by program income*. Costs financed by program income, as defined in § 1207.25, shall not count towards satisfying a cost sharing or matching requirement unless they are expressly permitted in the terms of the assistance agreement. (This use of general program income is described in § 1207.25(g).)

(5) *Services or property financed by income earned by contractors*. Contractors under a grant may earn income from the activities carried out under the contract in addition to the amounts earned from the party awarding the contract. No costs of services or property supported by this income may count toward satisfying a cost sharing or matching requirement unless other provisions of the grant agreement expressly permit this kind of income to be used to meet the requirement.

(6) *Records*. Costs and third party in-kind contributions counting towards satisfying a cost sharing or matching requirement must be verifiable from the records of grantees and subgrantee or cost-type contractors. These records must show how the value placed on third party in-kind contributions was derived. To the extent feasible, volunteer services will be supported by the same methods that the organization uses to support the allocability of regular personnel costs.

(7) *Special standards for third party in-kind contributions.* (i) Third party in-kind contributions count towards satisfying a cost sharing or matching requirement only where, if the party receiving the contributions were to pay for them, the payments would be allowable costs.

(ii) Some third party in-kind contributions are goods and services that, if the grantee, subgrantee, or contractor receiving the contribution had to pay for them, the payments would have been an indirect costs. Costs sharing or matching credit for such contributions shall be given only if the grantee, subgrantee, or contractor has established, along with its regular indirect cost rate, a special rate for allocating to individual projects or programs the value of the contributions.

(iii) A third party in-kind contribution to a fixed-price contract may count towards satisfying a cost sharing or matching requirement only if it results in:

(A) An increase in the services or property provided under the contract (without additional cost to the grantee or subgrantee) or

(B) A cost savings to the grantee or subgrantee.

(iv) The values placed on third party in-kind contributions for cost sharing or matching purposes will conform to the rules in the succeeding sections of this part. If a third party in-kind contribution is a type not treated in those sections, the value placed upon it shall be fair and reasonable.

(c) *Valuation of donated services*—(1) *Volunteer services.* Unpaid services provided to a grantee or subgrantee by individuals will be valued at rates consistent with those ordinarily paid for similar work in the grantee's or subgrantee's organization. If the grantee or subgrantee does not have employees performing similar work, the rates will be consistent with those ordinarily paid by other employers for similar work in the same labor market. In either case, a reasonable amount for fringe benefits may be included in the valuation.

(2) *Employees of other organizations.* When an employer other than a grantee, subgrantee, or cost-type contractor furnishes free of charge the services of an employee in the employee's normal line of work, the services will be valued at the employee's regular rate of pay exclusive of the employee's fringe benefits and overhead costs. If the services are in a different line of work, paragraph (c)(1) of this section applies.

(d) *Valuation of third party donated supplies and loaned equipment or space.* (1) If a third party donates supplies, the contribution will be valued at the market value of the supplies at the time of donation.

(2) If a third party donates the use of equipment or space in a building but retains title, the contribution will be valued at the fair rental rate of the equipment or space.

(e) *Valuation of third party donated equipment, buildings, and land.* If a third party donates equipment, buildings, or land, and title passes to a grantee or subgrantee, the treatment of the donated property will depend upon the purpose of the grant or subgrant, as follows:

(1) *Awards for capital expenditures.* If the purpose of the grant or subgrant is to assist the grantee or subgrantee in the acquisition of property, the market value of that property at the time of donation may be counted as cost sharing or matching,

(2) *Other awards.* If assisting in the acquisition of property is not the purpose of the grant or subgrant, paragraphs (e)(2)(i) and (ii) of this section apply:

(i) If approval is obtained from the awarding agency, the market value at the time of donation of the donated equipment or buildings and the fair rental rate of the donated land may be counted as cost sharing or matching. In the case of a subgrant, the terms of the grant agreement may require that the approval be obtained from the Federal agency as well as the grantee. In all cases, the approval may be given only if a purchase of the equipment or rental of the land would be approved as an allowable direct cost. If any part of the donated property was acquired with Federal funds, only the non-federal share of the property may be counted as cost-sharing or matching.

(ii) If approval is not obtained under paragraph (e)(2)(i) of this section, no amount may be counted for donated

land, and only depreciation or use allowances may be counted for donated equipment and buildings. The depreciation or use allowances for this property are not treated as third party in-kind contributions. Instead, they are treated as costs incurred by the grantee or subgrantee. They are computed and allocated (usually as indirect costs) in accordance with the cost principles specified in § 1207.22, in the same way as depreciation or use allowances for purchased equipment and buildings. The amount of depreciation or use allowances for donated equipment and buildings is based on the property's market value at the time it was donated.

(f) *Valuation of grantee or subgrantee donated real property for construction/acquisition*. If a grantee or subgrantee donates real property for a construction or facilities acquisition project, the current market value of that property may be counted as cost sharing or matching. If any part of the donated property was acquired with Federal funds, only the non-federal share of the property may be counted as cost sharing or matching.

(g) *Appraisal of real property*. In some cases under paragraphs (d), (e) and (f) of this section, it will be necessary to establish the market value of land or a building or the fair rental rate of land or of space in a building. In these cases, the Federal agency may require the market value or fair rental value be set by an independent appraiser, and that the value or rate be certified by the grantee. This requirement will also be imposed by the grantee on subgrantees.

**§ 1207.25 Program income.**

(a) *General*. Grantees are encouraged to earn income to defray program costs. Program income includes income from fees for services performed, from the use or rental of real or personal property acquired with grant funds, from the sale of commodities or items fabricated under a grant agreement, and from payments of principal and interest on loans made with grant funds. Except as otherwise provided in regulations of the Federal agency, program income does not include interest on grant funds, rebates, credits, discounts, refunds, etc. and interest earned on any of them.

(b) *Definition of program income*. Program income means gross income received by the grantee or subgrantee directly generated by a grant supported activity, or earned only as a result of the grant agreement during the grant period. ''During the grant period'' is the time between the effective date of the award and the ending date of the award reflected in the final financial report.

(c) *Cost of generating program income*. If authorized by Federal regulations or the grant agreement, costs incident to the generation of program income may be deducted from gross income to determine program income.

(d) *Governmental revenues*. Taxes, special assessments, levies, fines, and other such revenues raised by a grantee or subgrantee are not program income unless the revenues are specifically identified in the grant agreement or Federal agency regulations as program income.

(e) *Royalties*. Income from royalties and license fees for copyrighted material, patents, and inventions developed by a grantee or subgrantee is program income only if the revenues are specifically identified in the grant agreement or Federal agency regulations as program income. (See § 1207.34.)

(f) *Property*. Proceeds from the sale of real property or equipment will be handled in accordance with the requirements of §§ 1207.31 and 1207.32.

(g) *Use of program income*. Program income shall be deducted from outlays which may be both Federal and non-Federal as described below, unless the Federal agency regulations or the grant agreement specify another alternative (or a combination of the alternatives). In specifying alternatives, the Federal agency may distinguish between income earned by the grantee and income earned by subgrantees and between the sources, kinds, or amounts of income. When Federal agencies authorize the alternatives in paragraphs (g) (2) and (3) of this section, program income in excess of any limits stipulated shall also be deducted from outlays.

(1) *Deduction*. Ordinarily program income shall be deducted from total allowable costs to determine the net allowable costs. Program income shall be

used for current costs unless the Federal agency authorizes otherwise. Program income which the grantee did not anticipate at the time of the award shall be used to reduce the Federal agency and grantee contributions rather than to increase the funds committed to the project.

(2) *Addition*. When authorized, program income may be added to the funds committed to the grant agreement by the Federal agency and the grantee. The program income shall be used for the purposes and under the conditions of the grant agreement.

(3) *Cost sharing or matching*. When authorized, program income may be used to meet the cost sharing or matching requirement of the grant agreement. The amount of the Federal grant award remains the same.

(h) *Income after the award period*. There are no Federal requirements governing the disposition of program income earned after the end of the award period (i.e., until the ending date of the final financial report, see paragraph (a) of this section), unless the terms of the agreement or the Federal agency regulations provide otherwise.

### § 1207.26 Non-Federal audit.

(a) *Basic rule*. Grantees and subgrantees are responsible for obtaining audits in accordance with the Single Audit Act Amendments of 1996 (31 U.S.C. 7501–7507) and revised OMB Circular A–133, ''Audits of States, Local Governments, and Non-Profit Organizations.'' The audits shall be made by an independent auditor in accordance with generally accepted government auditing standards covering financial audits.

(b) *Subgrantees*. State or local governments, as those terms are defined for purposes of the Single Audit Act Amendments of 1996, that provide Federal awards to a subgrantee, which expends $300,000 or more (or other amount as specified by OMB) in Federal awards in a fiscal year, shall:

(1) Determine whether State or local subgrantees have met the audit requirements of the Act and whether subgrantees covered by OMB Circular A–110, ''Uniform Administrative Requirements for Grants and Agreements with Institutions of Higher Education, Hospitals, and Other Non-Profit Organizations,'' have met the audit requirements of the Act. Commercial contractors (private for-profit and private and governmental organizations) providing goods and services to State and local governments are not required to have a single audit performed. State and local governments should use their own procedures to ensure that the contractor has complied with laws and regulations affecting the expenditure of Federal funds;

(2) Determine whether the subgrantee spent Federal assistance funds provided in accordance with applicable laws and regulations. This may be accomplished by reviewing an audit of the subgrantee made in accordance with the Act, Circular A–110, or through other means (e.g., program reviews) if the subgrantee has not had such an audit;

(3) Ensure that appropriate corrective action is taken within six months after receipt of the audit report in instance of noncompliance with Federal laws and regulations;

(4) Consider whether subgrantee audits necessitate adjustment of the grantee's own records; and

(5) Require each subgrantee to permit independent auditors to have access to the records and financial statements.

(c) *Auditor selection*. In arranging for audit services, § 1207.36 shall be followed.

[53 FR 8072, 8087, Mar. 11, 1988, as amended at 62 FR 45939, 45943, Aug. 29, 1997]

## CHANGES, PROPERTY, AND SUBAWARDS

### § 1207.30 Changes.

(a) *General*. Grantees and subgrantees are permitted to rebudget within the approved direct cost budget to meet unanticipated requirements and may make limited program changes to the approved project. However, unless waived by the awarding agency, certain types of post-award changes in budgets and projects shall require the prior written approval of the awarding agency.

(b) *Relation to cost principles*. The applicable cost principles (see § 1207.22) contain requirements for prior approval of certain types of costs. Except where waived, those requirements

apply to all grants and subgrants even if paragraphs (c) through (f) of this section do not.

(c) *Budget changes*—(1) *Nonconstruction projects*. Except as stated in other regulations or an award document, grantees or subgrantees shall obtain the prior approval of the awarding agency whenever any of the following changes is anticipated under a nonconstruction award:

(i) Any revision which would result in the need for additional funding.

(ii) Unless waived by the awarding agency, cumulative transfers among direct cost categories, or, if applicable, among separately budgeted programs, projects, functions, or activities which exceed or are expected to exceed ten percent of the current total approved budget, whenever the awarding agency's share exceeds $100,000.

(iii) Transfer of funds allotted for training allowances (i.e., from direct payments to trainees to other expense categories).

(2) *Construction projects*. Grantees and subgrantees shall obtain prior written approval for any budget revision which would result in the need for additional funds.

(3) *Combined construction and nonconstruction projects*. When a grant or subgrant provides funding for both construction and nonconstruction activities, the grantee or subgrantee must obtain prior written approval from the awarding agency before making any fund or budget transfer from nonconstruction to construction or vice versa.

(d) *Programmatic changes*. Grantees or subgrantees must obtain the prior approval of the awarding agency whenever any of the following actions is anticipated:

(1) Any revision of the scope or objectives of the project (regardless of whether there is an associated budget revision requiring prior approval).

(2) Need to extend the period of availability of funds.

(3) Changes in key persons in cases where specified in an application or a grant award. In research projects, a change in the project director or principal investigator shall always require approval unless waived by the awarding agency.

(4) Under nonconstruction projects, contracting out, subgranting (if authorized by law) or otherwise obtaining the services of a third party to perform activities which are central to the purposes of the award. This approval requirement is in addition to the approval requirements of § 1207.36 but does not apply to the procurement of equipment, supplies, and general support services.

(e) *Additional prior approval requirements*. The awarding agency may not require prior approval for any budget revision which is not described in paragraph (c) of this section.

(f) *Requesting prior approval*. (1) A request for prior approval of any budget revision will be in the same budget formal the grantee used in its application and shall be accompanied by a narrative justification for the proposed revision.

(2) A request for a prior approval under the applicable Federal cost principles (see § 1207.22) may be made by letter.

(3) A request by a subgrantee for prior approval will be addressed in writing to the grantee. The grantee will promptly review such request and shall approve or disapprove the request in writing. A grantee will not approve any budget or project revision which is inconsistent with the purpose or terms and conditions of the Federal grant to the grantee. If the revision, requested by the subgrantee would result in a change to the grantee's approved project which requires Federal prior approval, the grantee will obtain the Federal agency's approval before approving the subgrantee's request.

### § 1207.31 Real property.

(a) *Title*. Subject to the obligations and conditions set forth in this section, title to real property acquired under a grant or subgrant will vest upon acquisition in the grantee or subgrantee respectively.

(b) *Use*. Except as otherwise provided by Federal statutes, real property will be used for the originally authorized purposes as long as needed for that purposes, and the grantee or subgrantee shall not dispose of or encumber its title or other interests.

(c) *Disposition*. When real property is no longer needed for the originally authorized purpose, the grantee or subgrantee will request disposition instructions from the awarding agency. The instructions will provide for one of the following alternatives:

(1) *Retention of title*. Retain title after compensating the awarding agency. The amount paid to the awarding agency will be computed by applying the awarding agency's percentage of participation in the cost of the original purchase to the fair market value of the property. However, in those situations where a grantee or subgrantee is disposing of real property acquired with grant funds and acquiring replacement real property under the same program, the net proceeds from the disposition may be used as an offset to the cost of the replacement property.

(2) *Sale of property*. Sell the property and compensate the awarding agency. The amount due to the awarding agency will be calculated by applying the awarding agency's percentage of participation in the cost of the original purchase to the proceeds of the sale after deduction of any actual and reasonable selling and fixing-up expenses. If the grant is still active, the net proceeds from sale may be offset against the original cost of the property. When a grantee or subgrantee is directed to sell property, sales procedures shall be followed that provide for competition to the extent practicable and result in the highest possible return.

(3) *Transfer of title*. Transfer title to the awarding agency or to a third-party designated/approved by the awarding agency. The grantee or subgrantee shall be paid an amount calculated by applying the grantee or subgrantee's percentage of participation in the purchase of the real property to the current fair market value of the property.

**§ 1207.32 Equipment.**

(a) *Title*. Subject to the obligations and conditions set forth in this section, title to equipment acquired under a grant or subgrant will vest upon acquisition in the grantee or subgrantee respectively.

(b) *States*. A State will use, manage, and dispose of equipment acquired under a grant by the State in accordance with State laws and procedures. Other grantees and subgrantees will follow paragraphs (c) through (e) of this section.

(c) *Use*. (1) Equipment shall be used by the grantee or subgrantee in the program or project for which it was acquired as long as needed, whether or not the project or program continues to be supported by Federal funds. When no longer needed for the original program or project, the equipment may be used in other activities currently or previously supported by a Federal agency.

(2) The grantee or subgrantee shall also make equipment available for use on other projects or programs currently or previously supported by the Federal Government, providing such use will not interfere with the work on the projects or program for which it was originally acquired. First preference for other use shall be given to other programs or projects supported by the awarding agency. User fees should be considered if appropriate.

(3) Notwithstanding the encouragement in § 1207.25(a) to earn program income, the grantee or subgrantee must not use equipment acquired with grant funds to provide services for a fee to compete unfairly with private companies that provide equivalent services, unless specifically permitted or contemplated by Federal statute.

(4) When acquiring replacement equipment, the grantee or subgrantee may use the equipment to be replaced as a trade-in or sell the property and use the proceeds to offset the cost of the replacement property, subject to the approval of the awarding agency.

(d) *Management requirements*. Procedures for managing equipment (including replacement equipment), whether acquired in whole or in part with grant funds, until disposition takes place will, as a minimum, meet the following requirements:

(1) Property records must be maintained that include a description of the property, a serial number or other identification number, the source of property, who holds title, the acquisition date, and cost of the property, percentage of Federal participation in the cost of the property, the location, use

and condition of the property, and any ultimate disposition data including the date of disposal and sale price of the property.

(2) A physical inventory of the property must be taken and the results reconciled with the property records at least once every two years.

(3) A control system must be developed to ensure adequate safeguards to prevent loss, damage, or theft of the property. Any loss, damage, or theft shall be investigated.

(4) Adequate maintenance procedures must be developed to keep the property in good condition.

(5) If the grantee or subgrantee is authorized or required to sell the property, proper sales procedures must be established to ensure the highest possible return.

(e) *Disposition*. When original or replacement equipment acquired under a grant or subgrant is no longer needed for the original project or program or for other activities currently or previously supported by a Federal agency, disposition of the equipment will be made as follows:

(1) Items of equipment with a current per-unit fair market value of less than $5,000 may be retained, sold or otherwise disposed of with no further obligation to the awarding agency.

(2) Items of equipment with a current per unit fair market value in excess of $5,000 may be retained or sold and the awarding agency shall have a right to an amount calculated by multiplying the current market value or proceeds from sale by the awarding agency's share of the equipment.

(3) In cases where a grantee or subgrantee fails to take appropriate disposition actions, the awarding agency may direct the grantee or subgrantee to take excess and disposition actions.

(f) *Federal equipment*. In the event a grantee or subgrantee is provided federally-owned equipment:

(1) Title will remain vested in the Federal Government.

(2) Grantees or subgrantees will manage the equipment in accordance with Federal agency rules and procedures, and submit an annual inventory listing.

(3) When the equipment is no longer needed, the grantee or subgrantee will request disposition instructions from the Federal agency.

(g) *Right to transfer title*. The Federal awarding agency may reserve the right to transfer title to the Federal Government or a third part named by the awarding agency when such a third party is otherwise eligible under existing statutes. Such transfers shall be subject to the following standards:

(1) The property shall be identified in the grant or otherwise made known to the grantee in writing.

(2) The Federal awarding agency shall issue disposition instruction within 120 calendar days after the end of the Federal support of the project for which it was acquired. If the Federal awarding agency fails to issue disposition instructions within the 120 calendar-day period the grantee shall follow § 1207.32(e).

(3) When title to equipment is transferred, the grantee shall be paid an amount calculated by applying the percentage of participation in the purchase to the current fair market value of the property.

### § 1207.33 Supplies.

(a) *Title*. Title to supplies acquired under a grant or subgrant will vest, upon acquisition, in the grantee or subgrantee respectively.

(b) *Disposition*. If there is a residual inventory of unused supplies exceeding $5,000 in total aggregate fair market value upon termination or completion of the award, and if the supplies are not needed for any other federally sponsored programs or projects, the grantee or subgrantee shall compensate the awarding agency for its share.

### § 1207.34 Copyrights.

The Federal awarding agency reserves a royalty-free, nonexclusive, and irrevocable license to reproduce, publish or otherwise use, and to authorize others to use, for Federal Government purposes:

(a) The copyright in any work developed under a grant, subgrant, or contract under a grant or subgrant; and

(b) Any rights of copyright to which a grantee, subgrantee or a contractor purchases ownership with grant support.

**§ 1207.35 Subawards to debarred and suspended parties.**

Grantees and subgrantees must not make any award or permit any award (subgrant or contract) at any tier to any party which is debarred or suspended or is otherwise excluded from or ineligible for participation in Federal assistance programs under Executive Order 12549, ''Debarment and Suspension.''

**§ 1207.36 Procurement.**

(a) *States.* When procuring property and services under a grant, a State will follow the same policies and procedures it uses for procurements from its non-Federal funds. The State will ensure that every purchase order or other contract includes any clauses required by Federal statutes and executive orders and their implementing regulations. Other grantees and subgrantees will follow paragraphs (b) through (i) in this section.

(b) *Procurement standards.* (1) Grantees and subgrantees will use their own procurement procedures which reflect applicable State and local laws and regulations, provided that the procurements conform to applicable Federal law and the standards identified in this section.

(2) Grantees and subgrantees will maintain a contract administration system which ensures that contractors perform in accordance with the terms, conditions, and specifications of their contracts or purchase orders.

(3) Grantees and subgrantees will maintain a written code of standards of conduct governing the performance of their employees engaged in the award and administration of contracts. No employee, officer or agent of the grantee or subgrantee shall participate in selection, or in the award or administration of a contract supported by Federal funds if a conflict of interest, real or apparent, would be involved. Such a conflict would arise when:

(i) The employee, officer or agent,

(ii) Any member of his immediate family,

(iii) His or her partner, or

(iv) An organization which employs, or is about to employ, any of the above, has a financial or other interest in the firm selected for award. The grantee's or subgrantee's officers, employees or agents will neither solicit nor accept gratuities, favors or anything of monetary value from contractors, potential contractors, or parties to subagreements. Grantee and subgrantees may set minimum rules where the financial interest is not substantial or the gift is an unsolicited item of nominal intrinsic value. To the extent permitted by State or local law or regulations, such standards or conduct will provide for penalties, sanctions, or other disciplinary actions for violations of such standards by the grantee's and subgrantee's officers, employees, or agents, or by contractors or their agents. The awarding agency may in regulation provide additional prohibitions relative to real, apparent, or potential conflicts of interest.

(4) Grantee and subgrantee procedures will provide for a review of proposed procurements to avoid purchase of unnecessary or duplicative items. Consideration should be given to consolidating or breaking out procurements to obtain a more economical purchase. Where appropriate, an analysis will be made of lease versus purchase alternatives, and any other appropriate analysis to determine the most economical approach.

(5) To foster greater economy and efficiency, grantees and subgrantees are encouraged to enter into State and local intergovernmental agreements for procurement or use of common goods and services.

(6) Grantees and subgrantees are encouraged to use Federal excess and surplus property in lieu of purchasing new equipment and property whenever such use is feasible and reduces project costs.

(7) Grantees and subgrantees are encouraged to use value engineering clauses in contracts for construction projects of sufficient size to offer reasonable opportunities for cost reductions. Value engineering is a systematic and creative anaylsis of each contract item or task to ensure that its essential function is provided at the overall lower cost.

(8) Grantees and subgrantees will make awards only to responsible contractors possessing the ability to perform successfully under the terms and

conditions of a proposed procurement. Consideration will be given to such matters as contractor integrity, compliance with public policy, record of past performance, and financial and technical resources.

(9) Grantees and subgrantees will maintain records sufficient to detail the significant history of a procurement. These records will include, but are not necessarily limited to the following: rationale for the method of procurement, selection of contract type, contractor selection or rejection, and the basis for the contract price.

(10) Grantees and subgrantees will use time and material type contracts only—

(i) After a determination that no other contract is suitable, and

(ii) If the contract includes a ceiling price that the contractor exceeds at its own risk.

(11) Grantees and subgrantees alone will be responsible, in accordance with good administrative practice and sound business judgment, for the settlement of all contractual and administrative issues arising out of procurements. These issues include, but are not limited to source evaluation, protests, disputes, and claims. These standards do not relieve the grantee or subgrantee of any contractual responsibilities under its contracts. Federal agencies will not substitute their judgment for that of the grantee or subgrantee unless the matter is primarily a Federal concern. Violations of law will be referred to the local, State, or Federal authority having proper jurisdiction.

(12) Grantees and subgrantees will have protest procedures to handle and resolve disputes relating to their procurements and shall in all instances disclose information regarding the protest to the awarding agency. A protestor must exhaust all administrative remedies with the grantee and subgrantee before pursuing a protest with the Federal agency. Reviews of protests by the Federal agency will be limited to:

(i) Violations of Federal law or regulations and the standards of this section (violations of State or local law will be under the jurisdiction of State or local authorities) and

(ii) Violations of the grantee's or subgrantee's protest procedures for failure to review a complaint or protest. Protests received by the Federal agency other than those specified above will be referred to the grantee or subgrantee.

(c) *Competition*. (1) All procurement transactions will be conducted in a manner providing full and open competition consistent with the standards of § 1207.36. Some of the situations considered to be restrictive of competition include but are not limited to:

(i) Placing unreasonable requirements on firms in order for them to qualify to do business,

(ii) Requiring unnecessary experience and excessive bonding,

(iii) Noncompetitive pricing practices between firms or between affiliated companies,

(iv) Noncompetitive awards to consultants that are on retainer contracts,

(v) Organizational conflicts of interest,

(vi) Specifying only a ''brand name'' product instead of allowing ''an equal'' product to be offered and describing the performance of other relevant requirements of the procurement, and

(vii) Any arbitrary action in the procurement process.

(2) Grantees and subgrantees will conduct procurements in a manner that prohibits the use of statutorily or administratively imposed in-State or local geographical preferences in the evaluation of bids or proposals, except in those cases where applicable Federal statutes expressly mandate or encourage geographic preference. Nothing in this section preempts State licensing laws. When contracting for architectural and engineering (A/E) services, geographic location may be a selection criteria provided its application leaves an appropriate number of qualified firms, given the nature and size of the project, to compete for the contract.

(3) Grantees will have written selection procedures for procurement transactions. These procedures will ensure that all solicitations:

(i) Incorporate a clear and accurate description of the technical requirements for the material, product, or service to be procured. Such description shall not, in competitive procurements, contain features which unduly

restrict competition. The description may include a statement of the qualitative nature of the material, product or service to be procured, and when necessary, shall set forth those minimum essential characteristics and standards to which it must conform if it is to satisfy its intended use. Detailed product specifications should be avoided if at all possible. When it is impractical or uneconomical to make a clear and accurate description of the technical requirements, a ''brand name or equal'' description may be used as a means to define the performance or other salient requirements of a procurement. The specific features of the named brand which must be met by offerors shall be clearly stated; and

(ii) Identify all requirements which the offerors must fulfill and all other factors to be used in evaluating bids or proposals.

(4) Grantees and subgrantees will ensure that all prequalified lists of persons, firms, or products which are used in acquiring goods and services are current and include enough qualified sources to ensure maximum open and free competition. Also, grantees and subgrantees will not preclude potential bidders from qualifying during the solicitation period.

(d) *Methods of procurement to be followed*—(1) *Procurement by small purchase procedures*. Small purchase procedures are those relatively simple and informal procurement methods for securing services, supplies, or other property that do not cost more than the simplified acquisition threshold fixed at 41 U.S.C. 403(11) (currently set at $100,000). If small purchase procedures are used, price or rate quotations shall be obtained from an adequate number of qualified sources.

(2) Procurement by *sealed bids* (formal advertising). Bids are publicly solicited and a firm-fixed-price contract (lump sum or unit price) is awarded to the responsible bidder whose bid, conforming with all the material terms and conditions of the invitation for bids, is the lowest in price. The sealed bid method is the preferred method for procuring construction, if the conditions in § 1207.36(d)(2)(i) apply.

(i) In order for sealed bidding to be feasible, the following conditions should be present:

(A) A complete, adequate, and realistic specification or purchase description is available;

(B) Two or more responsible bidders are willing and able to compete effectively and for the business; and

(C) The procurement lends itself to a firm fixed price contract and the selection of the successful bidder can be made principally on the basis of price.

(ii) If sealed bids are used, the following requirements apply:

(A) The invitation for bids will be publicly advertised and bids shall be solicited from an adequate number of known suppliers, providing them sufficient time prior to the date set for opening the bids;

(B) The invitation for bids, which will include any specifications and pertinent attachments, shall define the items or services in order for the bidder to properly respond;

(C) All bids will be publicly opened at the time and place prescribed in the invitation for bids;

(D) A firm fixed-price contract award will be made in writing to the lowest responsive and responsible bidder. Where specified in bidding documents, factors such as discounts, transportation cost, and life cycle costs shall be considered in determining which bid is lowest. Payment discounts will only be used to determine the low bid when prior experience indicates that such discounts are usually taken advantage of; and

(E) Any or all bids may be rejected if there is a sound documented reason.

(3) Procurement by *competitive proposals*. The technique of competitive proposals is normally conducted with more than one source submitting an offer, and either a fixed-price or cost-reimbursement type contract is awarded. It is generally used when conditions are not appropriate for the use of sealed bids. If this method is used, the following requirements apply:

(i) Requests for proposals will be publicized and identify all evaluation factors and their relative importance. Any response to publicized requests for proposals shall be honored to the maximum extent practical;

(ii) Proposals will be solicited from an adequate number of qualified sources;

(iii) Grantees and subgrantees will have a method for conducting technical evaluations of the proposals received and for selecting awardees;

(iv) Awards will be made to the responsible firm whose proposal is most advantageous to the program, with price and other factors considered; and

(v) Grantees and subgrantees may use competitive proposal procedures for qualifications-based procurement of architectural/engineering (A/E) professional services whereby competitors' qualifications are evaluated and the most qualified competitor is selected, subject to negotiation of fair and reasonable compensation. The method, where price is not used as a selection factor, can only be used in procurement of A/E professional services. It cannot be used to purchase other types of services though A/E firms are a potential source to perform the proposed effort.

(4) Procurement by *noncompetitive proposals* is procurement through solicitation of a proposal from only one source, or after solicitation of a number of sources, competition is determined inadequate.

(i) Procurement by noncompetitive proposals may be used only when the award of a contract is infeasible under small purchase procedures, sealed bids or competitive proposals and one of the following circumstances applies:

(A) The item is available only from a single source;

(B) The public exigency or emergency for the requirement will not permit a delay resulting from competitive solicitation;

(C) The awarding agency authorizes noncompetitive proposals; or

(D) After solicitation of a number of sources, competition is determined inadequate.

(ii) Cost analysis, i.e., verifying the proposed cost data, the projections of the data, and the evaluation of the specific elements of costs and profits, is required.

(iii) Grantees and subgrantees may be required to submit the proposed procurement to the awarding agency for pre-award review in accordance with paragraph (g) of this section.

(e) *Contracting with small and minority firms, women's business enterprise and labor surplus area firms.* (1) The grantee and subgrantee will take all necessary affirmative steps to assure that minority firms, women's business enterprises, and labor surplus area firms are used when possible.

(2) Affirmative steps shall include:

(i) Placing qualified small and minority businesses and women's business enterprises on solicitation lists;

(ii) Assuring that small and minority businesses, and women's business enterprises are solicited whenever they are potential sources;

(iii) Dividing total requirements, when economically feasible, into smaller tasks or quantities to permit maximum participation by small and minority business, and women's business enterprises;

(iv) Establishing delivery schedules, where the requirement permits, which encourage participation by small and minority business, and women's business enterprises;

(v) Using the services and assistance of the Small Business Administration, and the Minority Business Development Agency of the Department of Commerce; and

(vi) Requiring the prime contractor, if subcontracts are to be let, to take the affirmative steps listed in paragraphs (e)(2)(i) through (v) of this section.

(f) *Contract cost and price.* (1) Grantees and subgrantees must perform a cost or price analysis in connection with every procurement action including contract modifications. The method and degree of analysis is dependent on the facts surrounding the particular procurement situation, but as a starting point, grantees must make independent estimates before receiving bids or proposals. A cost analysis must be performed when the offeror is required to submit the elements of his estimated cost, e.g., under professional, consulting, and architectural engineering services contracts. A cost analysis will be necessary when adequate price competition is lacking, and for sole source procurements, including contract modifications or change orders,

unless price resonableness can be established on the basis of a catalog or market price of a commercial product sold in substantial quantities to the general public or based on prices set by law or regulation. A price analysis will be used in all other instances to determine the reasonableness of the proposed contract price.

(2) Grantees and subgrantees will negotiate profit as a separate element of the price for each contract in which there is no price competition and in all cases where cost analysis is performed. To establish a fair and reasonable profit, consideration will be given to the complexity of the work to be performed, the risk borne by the contractor, the contractor's investment, the amount of subcontracting, the quality of its record of past performance, and industry profit rates in the surrounding geographical area for similar work.

(3) Costs or prices based on estimated costs for contracts under grants will be allowable only to the extent that costs incurred or cost estimates included in negotiated prices are consistent with Federal cost principles (see § 1207.22). Grantees may reference their own cost principles that comply with the applicable Federal cost principles.

(4) The cost plus a percentage of cost and percentage of construction cost methods of contracting shall not be used.

(g) *Awarding agency review.* (1) Grantees and subgrantees must make available, upon request of the awarding agency, technical specifications on proposed procurements where the awarding agency believes such review is needed to ensure that the item and/or service specified is the one being proposed for purchase. This review generally will take place prior to the time the specification is incorporated into a solicitation document. However, if the grantee or subgrantee desires to have the review accomplished after a solicitation has been developed, the awarding agency may still review the specifications, with such review usually limited to the technical aspects of the proposed purchase.

(2) Grantees and subgrantees must on request make available for awarding agency pre-award review procurement documents, such as requests for proposals or invitations for bids, independent cost estimates, etc. when:

(i) A grantee's or subgrantee's procurement procedures or operation fails to comply with the procurement standards in this section; or

(ii) The procurement is expected to exceed the simplified acquisition threshold and is to be awarded without competition or only one bid or offer is received in response to a solicitation; or

(iii) The procurement, which is expected to exceed the simplified acquisition threshold, specifies a ''brand name'' product; or

(iv) The proposed award is more than the simplified acquisition threshold and is to be awarded to other than the apparent low bidder under a sealed bid procurement; or

(v) A proposed contract modification changes the scope of a contract or increases the contract amount by more than the simplified acquisition threshold.

(3) A grantee or subgrantee will be exempt from the pre-award review in paragraph (g)(2) of this section if the awarding agency determines that its procurement systems comply with the standards of this section.

(i) A grantee or subgrantee may request that its procurement system be reviewed by the awarding agency to determine whether its system meets these standards in order for its system to be certified. Generally, these reviews shall occur where there is a continuous high-dollar funding, and third-party contracts are awarded on a regular basis.

(ii) A grantee or subgrantee may self-certify its procurement system. Such self-certification shall not limit the awarding agency's right to survey the system. Under a self-certification procedure, awarding agencies may wish to rely on written assurances from the grantee or subgrantee that it is complying with these standards. A grantee or subgrantee will cite specific procedures, regulations, standards, etc., as being in compliance with these requirements and have its system available for review.

(h) *Bonding requirements.* For construction or facility improvement contracts or subcontracts exceeding the simplified acquisition threshold, the awarding agency may accept the bonding policy and requirements of the grantee or subgrantee provided the awarding agency has made a determination that the awarding agency's interest is adequately protected. If such a determination has not been made, the minimum requirements shall be as follows:

(1) *A bid guarantee from each bidder equivalent to five percent of the bid price.* The ''bid guarantee'' shall consist of a firm commitment such as a bid bond, certified check, or other negotiable instrument accompanying a bid as assurance that the bidder will, upon acceptance of his bid, execute such contractual documents as may be required within the time specified.

(2) *A performance bond on the part of the contractor for 100 percent of the contract price.* A ''performance bond'' is one executed in connection with a contract to secure fulfillment of all the contractor's obligations under such contract.

(3) *A payment bond on the part of the contractor for 100 percent of the contract price.* A ''payment bond'' is one executed in connection with a contract to assure payment as required by law of all persons supplying labor and material in the execution of the work provided for in the contract.

(i) *Contract provisions.* A grantee's and subgrantee's contracts must contain provisions in paragraph (i) of this section. Federal agencies are permitted to require changes, remedies, changed conditions, access and records retention, suspension of work, and other clauses approved by the Office of Federal Procurement Policy.

(1) Administrative, contractual, or legal remedies in instances where contractors violate or breach contract terms, and provide for such sanctions and penalties as may be appropriate. (Contracts more than the simplified acquisition threshold)

(2) Termination for cause and for convenience by the grantee or subgrantee including the manner by which it will be effected and the basis for settlement. (All contracts in excess of $10,000)

(3) Compliance with Executive Order 11246 of September 24, 1965, entitled ''Equal Employment Opportunity,'' as amended by Executive Order 11375 of October 13, 1967, and as supplemented in Department of Labor regulations (41 CFR chapter 60). (All construction contracts awarded in excess of $10,000 by grantees and their contractors or subgrantees)

(4) Compliance with the Copeland ''Anti-Kickback'' Act (18 U.S.C. 874) as supplemented in Department of Labor regulations (29 CFR Part 3). (All contracts and subgrants for construction or repair)

(5) Compliance with the Davis-Bacon Act (40 U.S.C. 276a to 276a–7) as supplemented by Department of Labor regulations (29 CFR Part 5). (Construction contracts in excess of $2000 awarded by grantees and subgrantees when required by Federal grant program legislation)

(6) Compliance with Sections 103 and 107 of the Contract Work Hours and Safety Standards Act (40 U.S.C. 327–330) as supplemented by Department of Labor regulations (29 CFR Part 5). (Construction contracts awarded by grantees and subgrantees in excess of $2000, and in excess of $2500 for other contracts which involve the employment of mechanics or laborers)

(7) Notice of awarding agency requirements and regulations pertaining to reporting.

(8) Notice of awarding agency requirements and regulations pertaining to patent rights with respect to any discovery or invention which arises or is developed in the course of or under such contract.

(9) Awarding agency requirements and regulations pertaining to copyrights and rights in data.

(10) Access by the grantee, the subgrantee, the Federal grantor agency, the Comptroller General of the United States, or any of their duly authorized representatives to any books, documents, papers, and records of the contractor which are directly pertinent to that specific contract for the purpose of making audit, examination, excerpts, and transcriptions.

(11) Retention of all required records for three years after grantees or subgrantees make final payments and all other pending matters are closed.

(12) Compliance with all applicable standards, orders, or requirements issued under section 306 of the Clean Air Act (42 U.S.C. 1857(h)), section 508 of the Clean Water Act (33 U.S.C. 1368), Executive Order 11738, and Environmental Protection Agency regulations (40 CFR part 15). (Contracts, subcontracts, and subgrants of amounts in excess of $100,000)

(13) Mandatory standards and policies relating to energy efficiency which are contained in the state energy conservation plan issued in compliance with the Energy Policy and Conservation Act (Pub. L. 94–163, 89 Stat. 871).

[53 FR 8072, Mar. 11, 1988, as amended at 60 FR 19639, 19643, Apr. 19, 1995]

### § 1207.37 Subgrants.

(a) *States*. States shall follow state law and procedures when awarding and administering subgrants (whether on a cost reimbursement or fixed amount basis) of financial assistance to local and Indian tribal governments. States shall:

(1) Ensure that every subgrant includes any clauses required by Federal statute and executive orders and their implementing regulations;

(2) Ensure that subgrantees are aware of requirements imposed upon them by Federal statute and regulation;

(3) Ensure that a provision for compliance with § 1207.42 is placed in every cost reimbursement subgrant; and

(4) Conform any advances of grant funds to subgrantees substantially to the same standards of timing and amount that apply to cash advances by Federal agencies.

(b) *All other grantees*. All other grantees shall follow the provisions of this part which are applicable to awarding agencies when awarding and administering subgrants (whether on a cost reimbursement or fixed amount basis) of financial assistance to local and Indian tribal governments. Grantees shall:

(1) Ensure that every subgrant includes a provision for compliance with this part;

(2) Ensure that every subgrant includes any clauses required by Federal statute and executive orders and their implementing regulations; and

(3) Ensure that subgrantees are aware of requirements imposed upon them by Federal statutes and regulations.

(c) *Exceptions*. By their own terms, certain provisions of this part do not apply to the award and administration of subgrants:

(1) Section 1207.10;

(2) Section 1207.11;

(3) The letter-of-credit procedures specified in Treasury Regulations at 31 CFR part 205, cited in § 1207.21; and

(4) Section 1207.50.

## REPORTS, RECORDS, RETENTION, AND ENFORCEMENT

### § 1207.40 Monitoring and reporting program performance.

(a) *Monitoring by grantees*. Grantees are responsible for managing the day-to-day operations of grant and subgrant supported activities. Grantees must monitor grant and subgrant supported activities to assure compliance with applicable Federal requirements and that performance goals are being achieved. Grantee monitoring must cover each program, function or activity.

(b) *Nonconstruction performance reports*. The Federal agency may, if it decides that performance information available from subsequent applications contains sufficient information to meet its programmatic needs, require the grantee to submit a performance report only upon expiration or termination of grant support. Unless waived by the Federal agency this report will be due on the same date as the final Financial Status Report.

(1) Grantees shall submit annual performance reports unless the awarding agency requires quarterly or semi-annual reports. However, performance reports will not be required more frequently than quarterly. Annual reports shall be due 90 days after the grant year, quarterly or semi-annual reports shall be due 30 days after the reporting period. The final performance report will be due 90 days after the expiration or termination of grant support. If a

justified request is submitted by a grantee, the Federal agency may extend the due date for any performance report. Additionally, requirements for unnecessary performance reports may be waived by the Federal agency.

(2) Performance reports will contain, for each grant, brief information on the following:

(i) A comparison of actual accomplishments to the objectives established for the period. Where the output of the project can be quantified, a computation of the cost per unit of output may be required if that information will be useful.

(ii) The reasons for slippage if established objectives were not met.

(iii) Additional pertinent information including, when appropriate, analysis and explanation of cost overruns or high unit costs.

(3) Grantees will not be required to submit more than the original and two copies of performance reports.

(4) Grantees will adhere to the standards in this section in prescribing performance reporting requirements for subgrantees.

(c) *Construction performance reports.* For the most part, on-site technical inspections and certified percentage-of-completion data are relied on heavily by Federal agencies to monitor progress under construction grants and subgrants. The Federal agency will require additional formal performance reports only when considered necessary, and never more frequently than quarterly.

(d) *Significant developments.* Events may occur between the scheduled performance reporting dates which have significant impact upon the grant or subgrant supported activity. In such cases, the grantee must inform the Federal agency as soon as the following types of conditions become known:

(1) Problems, delays, or adverse conditions which will materially impair the ability to meet the objective of the award. This disclosure must include a statement of the action taken, or contemplated, and any assistance needed to resolve the situation.

(2) Favorable developments which enable meeting time schedules and objectives sooner or at less cost than anticipated or producing more beneficial results than originally planned.

(e) Federal agencies may make site visits as warranted by program needs.

(f) *Waivers, extensions.* (1) Federal agencies may waive any performance report required by this part if not needed.

(2) The grantee may waive any performance report from a subgrantee when not needed. The grantee may extend the due date for any performance report from a subgrantee if the grantee will still be able to meet its performance reporting obligations to the Federal agency.

### § 1207.41 Financial reporting.

(a) *General.* (1) Except as provided in paragraphs (a)(2) and (5) of this section, grantees will use only the forms specified in paragraphs (a) through (e) of this section, and such supplementary or other forms as may from time to time be authorized by OMB, for:

(i) Submitting financial reports to Federal agencies, or

(ii) Requesting advances or reimbursements when letters of credit are not used.

(2) Grantees need not apply the forms prescribed in this section in dealing with their subgrantees. However, grantees shall not impose more burdensome requirements on subgrantees.

(3) Grantees shall follow all applicable standard and supplemental Federal agency instructions approved by OMB to the extend required under the Paperwork Reduction Act of 1980 for use in connection with forms specified in paragraphs (b) through (e) of this section. Federal agencies may issue substantive supplementary instructions only with the approval of OMB. Federal agencies may shade out or instruct the grantee to disregard any line item that the Federal agency finds unnecessary for its decisionmaking purposes.

(4) Grantees will not be required to submit more than the original and two copies of forms required under this part.

(5) Federal agencies may provide computer outputs to grantees to expedite or contribute to the accuracy of reporting. Federal agencies may accept the required information from grantees

in machine usable format or computer printouts instead of prescribed forms.

(6) Federal agencies may waive any report required by this section if not needed.

(7) Federal agencies may extend the due date of any financial report upon receiving a justified request from a grantee.

(b) *Financial Status Report*—(1) *Form.* Grantees will use Standard Form 269 or 269A, Financial Status Report, to report the status of funds for all nonconstruction grants and for construction grants when required in accordance with §1207.41(e)(2)(iii).

(2) *Accounting basis.* Each grantee will report program outlays and program income on a cash or accrual basis as prescribed by the awarding agency. If the Federal agency requires accrual information and the grantee's accounting records are not normally kept on the accural basis, the grantee shall not be required to convert its accounting system but shall develop such accrual information through and analysis of the documentation on hand.

(3) *Frequency.* The Federal agency may prescribe the frequency of the report for each project or program. However, the report will not be required more frequently than quarterly. If the Federal agency does not specify the frequency of the report, it will be submitted annually. A final report will be required upon expiration or termination of grant support.

(4) *Due date.* When reports are required on a quarterly or semiannual basis, they will be due 30 days after the reporting period. When required on an annual basis, they will be due 90 days after the grant year. Final reports will be due 90 days after the expiration or termination of grant support.

(c) *Federal Cash Transactions Report*—(1) *Form.* (i) For grants paid by letter or credit, Treasury check advances or electronic transfer of funds, the grantee will submit the Standard Form 272, Federal Cash Transactions Report, and when necessary, its continuation sheet, Standard Form 272a, unless the terms of the award exempt the grantee from this requirement.

(ii) These reports will be used by the Federal agency to monitor cash advanced to grantees and to obtain disbursement or outlay information for each grant from grantees. The format of the report may be adapted as appropriate when reporting is to be accomplished with the assistance of automatic data processing equipment provided that the information to be submitted is not changed in substance.

(2) *Forecasts of Federal cash requirements.* Forecasts of Federal cash requirements may be required in the ''Remarks'' section of the report.

(3) *Cash in hands of subgrantees.* When considered necessary and feasible by the Federal agency, grantees may be required to report the amount of cash advances in excess of three days' needs in the hands of their subgrantees or contractors and to provide short narrative explanations of actions taken by the grantee to reduce the excess balances.

(4) *Frequency and due date.* Grantees must submit the report no later than 15 working days following the end of each quarter. However, where an advance either by letter of credit or electronic transfer of funds is authorized at an annualized rate of one million dollars or more, the Federal agency may require the report to be submitted within 15 working days following the end of each month.

(d) *Request for advance or reimbursement*—(1) *Advance payments.* Requests for Treasury check advance payments will be submitted on Standard Form 270, Request for Advance or Reimbursement. (This form will not be used for drawdowns under a letter of credit, electronic funds transfer or when Treasury check advance payments are made to the grantee automatically on a predetermined basis.)

(2) *Reimbursements.* Requests for reimbursement under nonconstruction grants will also be submitted on Standard Form 270. (For reimbursement requests under construction grants, see paragraph (e)(1) of this section.)

(3) The frequency for submitting payment requests is treated in §1207.41(b)(3).

(e) *Outlay report and request for reimbursement for construction programs*—(1) *Grants that support construction activities paid by reimbursement method.* (i) Requests for reimbursement under construction grants will be submitted on

Standard Form 271, Outlay Report and Request for Reimbursement for Construction Programs. Federal agencies may, however, prescribe the Request for Advance or Reimbursement form, specified in § 1207.41(d), instead of this form.

(ii) The frequency for submitting reimbursement requests is treated in § 1207.41(b)(3).

(2) *Grants that support construction activities paid by letter of credit, electronic funds transfer or Treasury check advance.* (i) When a construction grant is paid by letter of credit, electronic funds transfer or Treasury check advances, the grantee will report its outlays to the Federal agency using Standard Form 271, Outlay Report and Request for Reimbursement for Construction Programs. The Federal agency will provide any necessary special instruction. However, frequency and due date shall be governed by § 1207.41(b)(3) and (4).

(ii) When a construction grant is paid by Treasury check advances based on periodic requests from the grantee, the advances will be requested on the form specified in § 1207.41(d).

(iii) The Federal agency may substitute the Financial Status Report specified in § 1207.41(b) for the Outlay Report and Request for Reimbursement for Construction Programs.

(3) *Accounting basis.* The accounting basis for the Outlay Report and Request for Reimbursement for Construction Programs shall be governed by § 1207.41(b)(2).

### § 1207.42 Retention and access requirements for records.

(a) *Applicability.* (1) This section applies to all financial and programmatic records, supporting documents, statistical records, and other records of grantees or subgrantees which are:

(i) Required to be maintained by the terms of this part, program regulations or the grant agreement, or

(ii) Otherwise reasonably considered as pertinent to program regulations or the grant agreement.

(2) This section does not apply to records maintained by contractors or subcontractors. For a requirement to place a provision concerning records in certain kinds of contracts, see § 1207.36(i)(10).

(b) *Length of retention period.* (1) Except as otherwise provided, records must be retained for three years from the starting date specified in paragraph (c) of this section.

(2) If any litigation, claim, negotiation, audit or other action involving the records has been started before the expiration of the 3-year period, the records must be retained until completion of the action and resolution of all issues which arise from it, or until the end of the regular 3-year period, whichever is later.

(3) To avoid duplicate recordkeeping, awarding agencies may make special arrangements with grantees and subgrantees to retain any records which are continuously needed for joint use. The awarding agency will request transfer of records to its custody when it determines that the records possess long-term retention value. When the records are transferred to or maintained by the Federal agency, the 3-year retention requirement is not applicable to the grantee or subgrantee.

(c) *Starting date of retention period*—(1) *General.* When grant support is continued or renewed at annual or other intervals, the retention period for the records of each funding period starts on the day the grantee or subgrantee submits to the awarding agency its single or last expenditure report for that period. However, if grant support is continued or renewed quarterly, the retention period for each year's records starts on the day the grantee submits its expenditure report for the last quarter of the Federal fiscal year. In all other cases, the retention period starts on the day the grantee submits its final expenditure report. If an expenditure report has been waived, the retention period starts on the day the report would have been due.

(2) *Real property and equipment records.* The retention period for real property and equipment records starts from the date of the disposition or replacement or transfer at the direction of the awarding agency.

(3) *Records for income transactions after grant or subgrant support.* In some cases grantees must report income after the period of grant support.

Where there is such a requirement, the retention period for the records pertaining to the earning of the income starts from the end of the grantee's fiscal year in which the income is earned.

(4) *Indirect cost rate proposals, cost allocations plans, etc.* This paragraph applies to the following types of documents, and their supporting records: indirect cost rate computations or proposals, cost allocation plans, and any similar accounting computations of the rate at which a particular group of costs is chargeable (such as computer usage chargeback rates or composite fringe benefit rates).

(i) *If submitted for negotiation.* If the proposal, plan, or other computation is required to be submitted to the Federal Government (or to the grantee) to form the basis for negotiation of the rate, then the 3-year retention period for its supporting records starts from the date of such submission.

(ii) *If not submitted for negotiation.* If the proposal, plan, or other computation is not required to be submitted to the Federal Government (or to the grantee) for negotiation purposes, then the 3-year retention period for the proposal plan, or computation and its supporting records starts from end of the fiscal year (or other accounting period) covered by the proposal, plan, or other computation.

(d) *Substitution of microfilm.* Copies made by microfilming, photocopying, or similar methods may be substituted for the original records.

(e) *Access to records*—(1) *Records of grantees and subgrantees.* The awarding agency and the Comptroller General of the United States, or any of their authorized representatives, shall have the right of access to any pertinent books, documents, papers, or other records of grantees and subgrantees which are pertinent to the grant, in order to make audits, examinations, excerpts, and transcripts.

(2) *Expiration of right of access.* The rights of access in this section must not be limited to the required retention period but shall last as long as the records are retained.

(f) *Restrictions on public access.* The Federal Freedom of Information Act (5 U.S.C. 552) does not apply to records Unless required by Federal, State, or local law, grantees and subgrantees are not required to permit public access to their records.

**§ 1207.43 Enforcement.**

(a) *Remedies for noncompliance.* If a grantee or subgrantee materially fails to comply with any term of an award, whether stated in a Federal statute or regulation, an assurance, in a State plan or application, a notice of award, or elsewhere, the awarding agency may take one or more of the following actions, as appropriate in the circumstances:

(1) Temporarily withhold cash payments pending correction of the deficiency by the grantee or subgrantee or more severe enforcement action by the awarding agency,

(2) Disallow (that is, deny both use of funds and matching credit for) all or part of the cost of the activity or action not in compliance,

(3) Wholly or partly suspend or terminate the current award for the grantee's or subgrantee's program,

(4) Withhold further awards for the program, or

(5) Take other remedies that may be legally available.

(b) *Hearings, appeals.* In taking an enforcement action, the awarding agency will provide the grantee or subgrantee an opportunity for such hearing, appeal, or other administrative proceeding to which the grantee or subgrantee is entitled under any statute or regulation applicable to the action involved.

(c) *Effects of suspension and termination.* Costs of grantee or subgrantee resulting from obligations incurred by the grantee or subgrantee during a suspension or after termination of an award are not allowable unless the awarding agency expressly authorizes them in the notice of suspension or termination or subsequently. Other grantee or subgrantee costs during suspension or after termination which are necessary and not reasonably avoidable are allowable if:

(1) The costs result from obligations which were properly incurred by the grantee or subgrantee before the effective date of suspension or termination, are not in anticipation of it, and, in the

case of a termination, are noncancellable, and,

(2) The costs would be allowable if the award were not suspended or expired normally at the end of the funding period in which the termination takes effect.

(d) *Relationship to debarment and suspension.* The enforcement remedies identified in this section, including suspension and termination, do not preclude grantee or subgrantee from being subject to ''Debarment and Suspension'' under E.O. 12549 (see § 1207.35).

### § 1207.44 Termination for convenience.

Except as provided in § 1207.43 awards may be terminated in whole or in part only as follows:

(a) By the awarding agency with the consent of the grantee or subgrantee in which case the two parties shall agree upon the termination conditions, including the effective date and in the case of partial termination, the portion to be terminated, or

(b) By the grantee or subgrantee upon written notification to the awarding agency, setting forth the reasons for such termination, the effective date, and in the case of partial termination, the portion to be terminated. However, if, in the case of a partial termination, the awarding agency determines that the remaining portion of the award will not accomplish the purposes for which the award was made, the awarding agency may terminate the award in its entirety under either § 1207.43 or paragraph (a) of this section.

## Subpart D—After-The-Grant Requirements

### § 1207.50 Closeout.

(a) *General.* The Federal agency will close out the award when it determines that all applicable administrative actions and all required work of the grant has been completed.

(b) *Reports.* Within 90 days after the expiration or termination of the grant, the grantee must submit all financial, performance, and other reports required as a condition of the grant. Upon request by the grantee, Federal agencies may extend this timeframe. These may include but are not limited to:

(1) Final performance or progress report.

(2) Financial Status Report (SF 269) or Outlay Report and Request for Reimbursement for Construction Programs (SF–271) (as applicable).

(3) Final request for payment (SF–270) (if applicable).

(4) Invention disclosure (if applicable).

(5) Federally-owned property report: In accordance with § 1207.32(f), a grantee must submit an inventory of all federally owned property (as distinct from property acquired with grant funds) for which it is accountable and request disposition instructions from the Federal agency of property no longer needed.

(c) *Cost adjustment.* The Federal agency will, within 90 days after receipt of reports in paragraph (b) of this section, make upward or downward adjustments to the allowable costs.

(d) *Cash adjustments.* (1) The Federal agency will make prompt payment to the grantee for allowable reimbursable costs.

(2) The grantee must immediately refund to the Federal agency any balance of unobligated (unencumbered) cash advanced that is not authorized to be retained for use on other grants.

### § 1207.51 Later disallowances and adjustments.

The closeout of a grant does not affect:

(a) The Federal agency's right to disallow costs and recover funds on the basis of a later audit or other review;

(b) The grantee's obligation to return any funds due as a result of later refunds, corrections, or other transactions;

(c) Records retention as required in § 1207.42;

(d) Property management requirements in §§ 1207.31 and 1207.32; and

(e) Audit requirements in § 1207.26.

### § 1207.52 Collection of amounts due.

(a) Any funds paid to a grantee in excess of the amount to which the grantee is finally determined to be entitled under the terms of the award constitute a debt to the Federal Government. If not paid within a reasonable

period after demand, the Federal agency may reduce the debt by:

(1) Making an adminstrative offset against other requests for reimbursements,

(2) Withholding advance payments otherwise due to the grantee, or

(3) Other action permitted by law.

(b) Except where otherwise provided by statutes or regulations, the Federal agency will charge interest on an overdue debt in accordance with the Federal Claims Collection Standards (4 CFR chapter II). The date from which interest is computed is not extended by litigation or the filing of any form of appeal.

## Subpart E—Entitlement [Reserved]

# PART 1208—ENFORCEMENT OF NONDISCRIMINATION ON THE BASIS OF HANDICAP IN PROGRAMS OR ACTIVITIES CONDUCTED BY THE NATIONAL ARCHIVES AND RECORDS ADMINISTRATION

Sec.

1208.101 Purpose.
1208.102 Application.
1208.103 Definitions.
1208.104–1208.109 [Reserved]
1208.110 Self-evaluation.
1208.111 Notice.
1208.112–1208.129 [Reserved]
1208.130 General prohibitions against discrimination.
1208.131–1208.139 [Reserved]
1208.140 Employment.
1208.141–1208.148 [Reserved]
1208.149 Program accessibility: Discrimination prohibited.
1208.150 Program accessibility: Existing facilities.
1208.151 Program accessibility: New construction and alterations.
1208.152–1208.159 [Reserved]
1208.160 Communications.
1208.161–1208.169 [Reserved]
1208.170 Compliance procedures.
1208.171–1208.999 [Reserved]

AUTHORITY: 29 U.S.C. 794.

SOURCE: 53 FR 25884, 25885, July 8, 1988, unless otherwise noted.

### § 1208.101 Purpose.

The purpose of this regulation is to effectuate section 119 of the Rehabilitation, Comprehensive Services, and Developmental Disabilities Amendments of 1978, which amended section 504 of the Rehabilitation Act of 1973 to prohibit discrimination on the basis of handicap in programs or activities conducted by Executive agencies or the United States Postal Service.

### § 1208.102 Application.

This regulation (§§ 1208.101–1208.170) applies to all programs or activities conducted by the agency, except for programs or activities conducted outside the United States that do not involve individuals with handicaps in the United States.

### § 1208.103 Definitions.

For purposes of this regulation, the term—

*Assistant Attorney General* means the Assistant Attorney General, Civil Rights Division, United States Department of Justice.

*Auxiliary aids* means services or devices that enable persons with impaired sensory, manual, or speaking skills to have an equal opportunity to participate in, and enjoy the benefits of, programs or activities conducted by the agency. For example, auxiliary aids useful for persons with impaired vision include readers, Brailled materials, audio recordings, and other similar services and devices. Auxiliary aids useful for persons with impaired hearing include telephone handset amplifiers, telephones compatible with hearing aids, telecommunication devices for deaf persons (TDD's), interpreters, notetakers, written materials, and other similar services and devices.

*Complete complaint* means a written statement that contains the complainant's name and address and describes the agency's alleged discriminatory action in sufficient detail to inform the agency of the nature and date of the alleged violation of section 504. It shall be signed by the complainant or by someone authorized to do so on his or her behalf. Complaints filed on behalf of classes or third parties shall describe or identify (by name, if possible) the alleged victims of discrimination.

*Facility* means all or any portion of buildings, structures, equipment, roads, walks, parking lots, rolling

stock or other conveyances, or other real or personal property.

*Historic preservation programs* means programs conducted by the agency that have preservation of historic properties as a primary purpose.

*Historic properties* means those properties that are listed or eligible for listing in the National Register of Historic Places or properties designated as historic under a statute of the appropriate State or local government body.

*Individual with handicaps* means any person who has a physical or mental impairment that substantially limits one or more major life activities, has a record of such an impairment, or is regarded as having such an impairment.

As used in this definition, the phrase:

(1) *Physical or mental impairment* includes—

(i) Any physiological disorder or condition, cosmetic disfigurement, or anatomical loss affecting one or more of the following body systems: Neurological; musculoskeletal; special sense organs; respiratory, including speech organs; cardiovascular; reproductive; digestive; genitourinary; hemic and lymphatic; skin; and endocrine; or

(ii) Any mental or psychological disorder, such as mental retardation, organic brain syndrome, emotional or mental illness, and specific learning disabilities. The term *physical or mental impairment* includes, but is not limited to, such diseases and conditions as orthopedic, visual, speech, and hearing impairments, cerebral palsy, epilepsy, muscular dystrophy, multiple sclerosis, cancer, heart disease, diabetes, mental retardation, emotional illness, and drug addiction and alcoholism.

(2) *Major life activities* includes functions such as caring for one's self, performing manual tasks, walking, seeing, hearing, speaking, breathing, learning, and working.

(3) *Has a record of such an impairment* means has a history of, or has been misclassified as having, a mental or physical impairment that substantially limits one or more major life activities.

(4) *Is regarded as having an impairment* means—

(i) Has a physical or mental impairment that does not substantially limit major life activities but is treated by the agency as constituting such a limitation;

(ii) Has a physical or mental impairment that substantially limits major life activities only as a result of the attitudes of others toward such impairment; or

(iii) Has none of the impairments defined in paragraph (i) of this definition but is treated by the agency as having such an impairment.

*Qualified individual with handicaps* means—

(1) With respect to preschool, elementary, or secondary education services provided by the agency, an individual with handicaps who is a member of a class of persons otherwise entitled by statute, regulation, or agency policy to receive education services from the agency;

(2) With respect to any other agency program or activity under which a person is required to perform services or to achieve a level of accomplishment, an individual with handicaps who meets the essential eligibility requirements and who can achieve the purpose of the program or activity without modifications in the program or activity that the agency can demonstrate would result in a fundamental alteration in its nature;

(3) With respect to any other program or activity, an individual with handicaps who meets the essential eligibility requirements for participation in, or receipt of benefits from, that program or activity; and

(4) *Qualified handicapped person* as that term is defined for purposes of employment in 29 CFR 1613.702(f), which is made applicable to this regulation by § 1208.140.

*Section 504* means section 504 of the Rehabilitation Act of 1973 (Pub. L. 93–112, 87 Stat. 394 (29 U.S.C. 794)), as amended by the Rehabilitation Act Amendments of 1974 (Pub. L. 93–516, 88 Stat. 1617); the Rehabilitation, Comprehensive Services, and Developmental Disabilities Amendments of 1978 (Pub. L. 95–602, 92 Stat. 2955); and the Rehabilitation Act Amendments of 1986 (Pub. L. 99–506, 100 Stat. 1810). As used in this regulation, section 504 applies only to programs or activities conducted by Executive agencies and not to federally assisted programs.

*Substantial impairment* means a significant loss of the integrity of finished materials, design quality, or special character resulting from a permanent alteration.

### §§ 1208.104–1208.109 [Reserved]

### § 1208.110 Self-evaluation.

(a) The agency shall, by September 6, 1989, evaluate its current policies and practices, and the effects thereof, that do not or may not meet the requirements of this regulation and, to the extent modification of any such policies and practices is required, the agency shall proceed to make the necessary modifications.

(b) The agency shall provide an opportunity to interested persons, including individuals with handicaps or organizations representing individuals with handicaps, to participate in the self-evaluation process by submitting comments (both oral and written).

(c) The agency shall, for at least three years following completion of the self-evaluation, maintain on file and make available for public inspection:

(1) A description of areas examined and any problems identified; and

(2) A description of any modifications made.

### § 1208.111 Notice.

The agency shall make available to employees, applicants, participants, beneficiaries, and other interested persons such information regarding the provisions of this regulation and its applicability to the programs or activities conducted by the agency, and make such information available to them in such manner as the head of the agency finds necessary to apprise such persons of the protections against discrimination assured them by section 504 and this regulation.

### §§ 1208.112–1208.129 [Reserved]

### § 1208.130 General prohibitions against discrimination.

(a) No qualified individual with handicaps shall, on the basis of handicap, be excluded from participation in, be denied the benefits of, or otherwise be subjected to discrimination under any program or activity conducted by the agency.

(b)(1) The agency, in providing any aid, benefit, or service, may not, directly or through contractual, licensing, or other arrangements, on the basis of handicap—

(i) Deny a qualified individual with handicaps the opportunity to participate in or benefit from the aid, benefit, or service;

(ii) Afford a qualified individual with handicaps an opportunity to participate in or benefit from the aid, benefit, or service that is not equal to that afforded others;

(iii) Provide a qualified individual with handicaps with an aid, benefit, or service that is not as effective in affording equal opportunity to obtain the same result, to gain the same benefit, or to reach the same level of achievement as that provided to others;

(iv) Provide different or separate aid, benefits, or services to individuals with handicaps or to any class of individuals with handicaps than is provided to others unless such action is necessary to provide qualified individuals with handicaps with aid, benefits, or services that are as effective as those provided to others;

(v) Deny a qualified individual with handicaps the opportunity to participate as a member of planning or advisory boards;

(vi) Otherwise limit a qualified individual with handicaps in the enjoyment of any right, privilege, advantage, or opportunity enjoyed by others receiving the aid, benefit, or service.

(2) The agency may not deny a qualified individual with handicaps the opportunity to participate in programs or activities that are not separate or different, despite the existence of permissibly separate or different programs or activities.

(3) The agency may not, directly or through contractual or other arrangements, utilize criteria or methods of administration the purpose or effect of which would—

(i) Subject qualified individuals with handicaps to discrimination on the basis of handicap; or

(ii) Defeat or substantially impair accomplishment of the objectives of a

program or activity with respect to individuals with handicaps.

(4) The agency may not, in determining the site or location of a facility, make selections the purpose or effect of which would—

(i) Exclude individuals with handicaps from, deny them the benefits of, or otherwise subject them to discrimination under any program or activity conducted by the agency; or

(ii) Defeat or substantially impair the accomplishment of the objectives of a program or activity with respect to individuals with handicaps.

(5) The agency, in the selection of procurement contractors, may not use criteria that subject qualified individuals with handicaps to discrimination on the basis of handicap.

(6) The agency may not administer a licensing or certification program in a manner that subjects qualified individuals with handicaps to discrimination on the basis of handicap, nor may the agency establish requirements for the programs or activities of licensees or certified entities that subject qualified individuals with handicaps to discrimination on the basis of handicap. However, the programs or activities of entities that are licensed or certified by the agency are not, themselves, covered by this regulation.

(c) The exclusion of nonhandicapped persons from the benefits of a program limited by Federal statute or Executive order to individuals with handicaps or the exclusion of a specific class of individuals with handicaps from a program limited by Federal statute or Executive order to a different class of individuals with handicaps is not prohibited by this regulation.

(d) The agency shall administer programs and activities in the most integrated setting appropriate to the needs of qualified individuals with handicaps.

**§§ 1208.131–1208.139 [Reserved]**

**§ 1208.140 Employment.**

No qualified individual with handicaps shall, on the basis of handicap, be subject to discrimination in employment under any program or activity conducted by the agency. The definitions, requirements, and procedures of section 501 of the Rehabilitation Act of 1973 (29 U.S.C. 791), as established by the Equal Employment Opportunity Commission in 29 CFR part 1613, shall apply to employment in federally conducted programs or activities.

**§§ 1208.141–1208.148 [Reserved]**

**§ 1208.149 Program accessibility: Discrimination prohibited.**

Except as otherwise provided in § 1208.150, no qualified individual with handicaps shall, because the agency's facilities are inaccessible to or unusable by individuals with handicaps, be denied the benefits of, be excluded from participation in, or otherwise be subjected to discrimination under any program or activity conducted by the agency.

**§ 1208.150 Program accessibility: Existing facilities.**

(a) *General.* The agency shall operate each program or activity so that the program or activity, when viewed in its entirety, is readily accessible to and usable by individuals with handicaps. This paragraph does not—

(1) Necessarily require the agency to make each of its existing facilities accessible to and usable by individuals with handicaps;

(2) In the case of historic preservation programs, require the agency to take any action that would result in a substantial impairment of significant historic features of an historic property; or

(3) Require the agency to take any action that it can demonstrate would result in a fundamental alteration in the nature of a program or activity or in undue financial and administrative burdens. In those circumstances where agency personnel believe that the proposed action would fundamentally alter the program or activity or would result in undue financial and administrative burdens, the agency has the burden of proving that compliance with § 1208.150(a) would result in such alteration or burdens. The decision that compliance would result in such alteration or burdens must be made by the agency head or his or her designee after considering all agency resources available for use in the funding and operation of the conducted program or

activity, and must be accompanied by a written statement of the reasons for reaching that conclusion. If an action would result in such an alteration or such burdens, the agency shall take any other action that would not result in such an alteration or such burdens but would nevertheless ensure that individuals with handicaps receive the benefits and services of the program or activity.

(b) *Methods*—(1) *General.* The agency may comply with the requirements of this section through such means as redesign of equipment, reassignment of services to accessible buildings, assignment of aides to beneficiaries, home visits, delivery of services at alternate accessible sites, alteration of existing facilities and construction of new facilities, use of accessible rolling stock, or any other methods that result in making its programs or activities readily accessible to and usable by individuals with handicaps. The agency is not required to make structural changes in existing facilities where other methods are effective in achieving compliance with this section. The agency, in making alterations to existing buildings, shall meet accessibility requirements to the extent compelled by the Architectural Barriers Act of 1968, as amended (42 U.S.C. 4151–4157), and any regulations implementing it. In choosing among available methods for meeting the requirements of this section, the agency shall give priority to those methods that offer programs and activities to qualified individuals with handicaps in the most integrated setting appropriate.

(2) *Historic preservation programs.* In meeting the requirements of § 1208.150(a) in historic preservation programs, the agency shall give priority to methods that provide physical access to individuals with handicaps. In cases where a physical alteration to an historic property is not required because of § 1208.150(a)(2) or (3), alternative methods of achieving program accessibility include—

(i) Using audio-visual materials and devices to depict those portions of an historic property that cannot otherwise be made accessible;

(ii) Assigning persons to guide individuals with handicaps into or through portions of historic properties that cannot otherwise be made accessible; or

(iii) Adopting other innovative methods.

(c) *Time period for compliance.* The agency shall comply with the obligations established under this section by November 7, 1988, except that where structural changes in facilities are undertaken, such changes shall be made by September 6, 1991, but in any event as expeditiously as possible.

(d) *Transition plan.* In the event that structural changes to facilities will be undertaken to achieve program accessibility, the agency shall develop, by March 6, 1989, a transition plan setting forth the steps necessary to complete such changes. The agency shall provide an opportunity to interested persons, including individuals with handicaps or organizations representing individuals with handicaps, to participate in the development of the transition plan by submitting comments (both oral and written). A copy of the transition plan shall be made available for public inspection. The plan shall, at a minimum—

(1) Identify physical obstacles in the agency's facilities that limit the accessibility of its programs or activities to individuals with handicaps;

(2) Describe in detail the methods that will be used to make the facilities accessible;

(3) Specify the schedule for taking the steps necessary to achieve compliance with this section and, if the time period of the transition plan is longer than one year, identify steps that will be taken during each year of the transition period; and

(4) Indicate the official responsible for implementation of the plan.

### § 1208.151 Program accessibility: New construction and alterations.

Each building or part of a building that is constructed or altered by, on behalf of, or for the use of the agency shall be designed, constructed, or altered so as to be readily accessible to and usable by individuals with handicaps. The definitions, requirements, and standards of the Architectural Barriers Act (42 U.S.C. 4151–4157), as established in 41 CFR 101–19.600 to 101–19.607,

apply to buildings covered by this section.

**§§ 1208.152–1208.159 [Reserved]**

**§ 1208.160 Communications.**

(a) The agency shall take appropriate steps to ensure effective communication with applicants, participants, personnel of other Federal entities, and members of the public.

(1) The agency shall furnish appropriate auxiliary aids where necessary to afford an individual with handicaps an equal opportunity to participate in, and enjoy the benefits of, a program or activity conducted by the agency.

(i) In determining what type of auxiliary aid is necessary, the agency shall give primary consideration to the requests of the individual with handicaps.

(ii) The agency need not provide individually prescribed devices, readers for personal use or study, or other devices of a personal nature.

(2) Where the agency communicates with applicants and beneficiaries by telephone, telecommunication devices for deaf persons (TDD's) or equally effective telecommunication systems shall be used to communicate with persons with impaired hearing.

(b) The agency shall ensure that interested persons, including persons with impaired vision or hearing, can obtain information as to the existence and location of accessible services, activities, and facilities.

(c) The agency shall provide signage at a primary entrance to each of its inaccessible facilities, directing users to a location at which they can obtain information about accessible facilities. The international symbol for accessibility shall be used at each primary entrance of an accessible facility.

(d) This section does not require the agency to take any action that it can demonstrate would result in a fundamental alteration in the nature of a program or activity or in undue financial and administrative burdens. In those circumstances where agency personnel believe that the proposed action would fundamentally alter the program or activity or would result in undue financial and administrative burdens, the agency has the burden of proving that compliance with § 1208.160 would result in such alteration or burdens. The decision that compliance would result in such alteration or burdens must be made by the agency head or his or her designee after considering all agency resources available for use in the funding and operation of the conducted program or activity and must be accompanied by a written statement of the reasons for reaching that conclusion. If an action required to comply with this section would result in such an alteration or such burdens, the agency shall take any other action that would not result in such an alteration or such burdens but would nevertheless ensure that, to the maximum extent possible, individuals with handicaps receive the benefits and services of the program or activity.

**§§ 1208.161–1208.169 [Reserved]**

**§ 1208.170 Compliance procedures.**

(a) Except as provided in paragraph (b) of this section, this section applies to all allegations of discrimination on the basis of handicap in programs and activities conducted by the agency.

(b) The agency shall process complaints alleging violations of section 504 with respect to employment according to the procedures established by the Equal Employment Opportunity Commission in 29 CFR part 1613 pursuant to section 501 of the Rehabilitation Act of 1973 (29 U.S.C. 791).

(c) The Assistant Archivist for Management and Administration shall be responsible for coordinating implementation of this section. Compliants may be sent to National Archives and Records Administration (NA), Washington, DC 20408.

(d) The agency shall accept and investigate all complete complaints for which it has jurisdiction. All complete complaints must be filed within 180 days of the alleged act of discrimination. The agency may extend this time period for good cause.

(e) If the agency receives a complaint over which it does not have jurisdiction, it shall promptly notify the complainant and shall make reasonable efforts to refer the complaint to the appropriate Government entity.

(f) The agency shall notify the Architectural and Transportation Barriers Compliance Board upon receipt of any complaint alleging that a building or facility that is subject to the Architectural Barriers Act of 1968, as amended (42 U.S.C. 4151–4157), is not readily accessible to and usable by individuals with handicaps.

(g) Within 180 days of the receipt of a complete complaint for which it has jurisdiction, the agency shall notify the complainant of the results of the investigation in a letter containing—

(1) Findings of fact and conclusions of law;

(2) A description of a remedy for each violation found; and

(3) A notice of the right to appeal.

(h) Appeals of the findings of fact and conclusions of law or remedies must be filed by the complainant within 90 days of receipt from the agency of the letter required by §1208.170(g). The agency may extend this time for good cause.

(i) Timely appeals shall be accepted and processed by the head of the agency.

(j) The head of the agency shall notify the complainant of the results of the appeal within 60 days of the receipt of the request. If the head of the agency determines that additional information is needed from the complainant, he or she shall have 60 days from the date of receipt of the additional information to make his or her determination on the appeal.

(k) The time limits cited in paragraphs (g) and (j) of this section may be extended with the permission of the Assistant Attorney General.

(l) The agency may delegate its authority for conducting complaint investigations to other Federal agencies, except that the authority for making the final determination may not be delegated to another agency.

[53 FR 25884, 25885, July 8, 1988, as amended at 53 FR 25884, July 8, 1988]

**§§ 1208.171–1208.999 [Reserved]**

# PART 1210—UNIFORM ADMINISTRATIVE REQUIREMENTS FOR GRANTS AND AGREEMENTS WITH INSTITUTIONS OF HIGHER EDUCATION, HOSPITALS, AND OTHER NON-PROFIT ORGANIZATIONS

## Subpart A—General

Sec.
1210.1 Purpose.
1210.2 Definitions.
1210.3 Effect on other issuances.
1210.4 Deviations.
1210.5 Subawards.

## Subpart B—Pre-Award Requirements

1210.10 Purpose.
1210.11 Pre-award policies.
1210.12 Forms for applying for Federal assistance.
1210.13 Debarment and suspension.
1210.14 Special award conditions.
1210.15 Metric system of measurement.
1210.16 Resource Conservation and Recovery Act.
1210.17 Certifications and representations.

## Subpart C—Post-Award Requirements

FINANCIAL AND PROGRAM MANAGEMENT

1210.20 Purpose of financial and program management.
1210.21 Standards for financial management systems.
1210.22 Payment.
1210.23 Cost sharing or matching.
1210.24 Program income.
1210.25 Revision of budget and program plans.
1210.26 Non-Federal audits.
1210.27 Allowable costs.
1210.28 Period of availability of funds.

PROPERTY STANDARDS

1210.30 Purpose of property standards.
1210.31 Insurance coverage.
1210.32 Real property.
1210.33 Federally-owned and exempt property.
1210.34 Equipment.
1210.35 Supplies and other expendable property.
1210.36 Intangible property.
1210.37 Property trust relationship.

PROCUREMENT STANDARDS

1210.40 Purpose of procurement standards.
1210.41 Recipient responsibilities.
1210.42 Codes of conduct.
1210.43 Competition.

1210.44 Procurement procedures.
1210.45 Cost and price analysis.
1210.46 Procurement records.
1210.47 Contract administration.
1210.48 Contract provisions.

REPORTS AND RECORDS

1210.50 Purpose of reports and records.
1210.51 Monitoring and reporting program performance.
1210.52 Financial reporting.
1210.53 Retention and access requirements for records.

TERMINATION AND ENFORCEMENT

1210.60 Purpose of termination and enforcement.
1210.61 Termination.
1210.62 Enforcement.

**Subpart D—After-the-Award Requirements**

1210.70 Purpose.
1210.71 Closeout procedures.
1210.72 Subsequent adjustments and continuing responsibilities.
1210.73 Collection of amounts due.

APPENDIX A TO PART 1210—CONTRACT PROVISIONS

AUTHORITY: 5 U.S.C. 301; OMB Circular A–110 (64 FR 54926, October 8, 1999).

SOURCE: 60 FR 53515, Oct. 16, 1995, unless otherwise noted.

## Subpart A—General

### § 1210.1 Purpose.

This part establishes uniform administrative requirements for NHPRC grants and agreements awarded to institutions of higher education, hospitals, and other non-profit organizations. Non-profit organizations that implement NHPRC programs for the States are also subject to State requirements.

### § 1210.2 Definitions.

(a) *Accrued expenditures* means the charges incurred by the recipient during a given period requiring the provision of funds for:

(1) Goods and other tangible property received;

(2) Services performed by employees, contractors, subrecipients, and other payees; and,

(3) Other amounts becoming owed under programs for which no current services or performance is required.

(b) *Accrued income* means the sum of:

(1) Earnings during a given period from

(i) Services performed by the recipient, and

(ii) Goods and other tangible property delivered to purchasers, and

(2) Amounts becoming owed to the recipient for which no current services or performance is required by the recipient.

(c) *Acquisition cost of equipment* means the net invoice price of the equipment, including the cost of modifications, attachments, accessories, or auxiliary apparatus necessary to make the property usable for the purpose for which it was acquired. Other charges, such as the cost of installation, transportation, taxes, duty or protective in-transit insurance, shall be included or excluded from the unit acquisition cost in accordance with the recipient's regular accounting practices.

(d) *Advance* means a payment made by Treasury check or other appropriate payment mechanism to a recipient upon its request either before outlays are made by the recipient or through the use of predetermined payment schedules.

(e) *Award* means financial assistance that provides support or stimulation to accomplish a public purpose. Awards include grants and other agreements in the form of money or property in lieu of money, by the NHPRC to an eligible recipient. The term does not include: technical assistance, which provides services instead of money; other assistance in the form of loans, loan guarantees, interest subsidies, or insurance; direct payments of any kind to individuals; and, contracts which are required to be entered into and administered under procurement laws and regulations.

(f) *Cash contributions* means the recipient's cash outlay, including the outlay of money contributed to the recipient by third parties.

(g) *Closeout* means the process by which the NHPRC determines that all applicable administrative actions and all required work of the award have been completed by the recipient and the NHPRC.

(h) *Contract* means a procurement contract under an award or subaward,

and a procurement subcontract under a recipient's or subrecipient's contract.

(i) *Cost sharing or matching* means that portion of project or program costs not borne by the NHPRC.

(j) *Date of completion* means the date on which all work under an award is completed or the date on the award document, or any supplement or amendment thereto, on which NHPRC sponsorship ends.

(k) *Disallowed costs* means those charges to an award that the NHPRC determines to be unallowable, in accordance with the applicable Federal cost principles or other terms and conditions contained in the award.

(l) *Equipment* means tangible nonexpendable personal property including exempt property charged directly to the award having a useful life of more than one year and an acquisition cost of $5,000 or more per unit. However, consistent with recipient policy, lower limits may be established.

(m) *Excess property* means property under the control of the NHPRC that, as determined by the head thereof, is no longer required for its needs or the discharge of its responsibilities.

(n) *Exempt property* means tangible personal property acquired in whole or in part with NHPRC funds, where the NHPRC has statutory authority to vest title in the recipient without further obligation to the Federal Government. An example of exempt property authority is contained in the Federal Grant and Cooperative Agreement Act (31 U.S.C. 6306), for property acquired under an award to conduct basic or applied research by a non-profit institution of higher education or non-profit organization whose principal purpose is conducting scientific research.

(o) *Federal awarding agency* means the Federal agency that provides an award to the recipient.

(p) *Federal funds authorized* means the total amount of NHPRC funds obligated by the Federal Government for use by the recipient. This amount may include any authorized carryover of unobligated funds from prior funding periods when permitted by NHPRC regulations or NHPRC implementing instructions.

(q) *Federal share of real property, equipment, or supplies* means that percentage of the property's acquisition costs and any improvement expenditures paid with NHPRC funds.

(r) *Funding period* means the period of time when NHPRC funding is available for obligation by the recipient.

(s) *Intangible property and debt instruments* means, but is not limited to, trademarks, copyrights, patents and patent applications and such property as loans, notes and other debt instruments, lease agreements, stock and other instruments of property ownership, whether considered tangible or intangible.

(t) *NARA* means the National Archives and Records Administration.

(u) *NHPRC* means the National Historical Publications and Records Commission.

(v) *Obligations* means the amounts of orders placed, contracts and grants awarded, services received and similar transactions during a given period that require payment by the recipient during the same or a future period.

(w) *Outlays or expenditures* means charges made to the project or program. They may be reported on a cash or accrual basis. For reports prepared on a cash basis, outlays are the sum of cash disbursements for direct charges for goods and services, the amount of indirect expense charged, the value of third party in-kind contributions applied and the amount of cash advances and payments made to subrecipients. For reports prepared on an accrual basis, outlays are the sum of cash disbursements for direct charges for goods and services, the amount of indirect expense incurred, the value of in-kind contributions applied, and the net increase (or decrease) in the amounts owed by the recipient for goods and other property received, for services performed by employees, contractors, subrecipients and other payees and other amounts becoming owed under programs for which no current services or performance are required.

(x) *Personal property* means property of any kind except real property. It may be tangible, having physical existence, or intangible, having no physical existence, such as copyrights, patents, or securities.

(y) *Prior approval* means written approval by an authorized official evidencing prior consent.

(z) *Program income* means gross income earned by the recipient that is directly generated by a supported activity or earned as a result of the award (see exclusions in §1210.24 (e) and (h)). Program income includes, but is not limited to, income from fees for services performed, the use or rental of real or personal property acquired under federally-funded projects, the sale of commodities or items fabricated under an award, license fees and royalties on patents and copyrights, and interest on loans made with award funds. Interest earned on advances of Federal funds is not program income. Except as otherwise provided in NHPRC regulations or the terms and conditions of the award, program income does not include the receipt of principal on loans, rebates, credits, discounts, etc., or interest earned on any of them.

(aa) *Project costs* means all allowable costs, as set forth in the applicable Federal cost principles, incurred by a recipient and the value of the contributions made by third parties in accomplishing the objectives of the award during the project period.

(bb) *Project period* means the period established in the award document during which NHPRC sponsorship begins and ends.

(cc) *Property* means, unless otherwise stated, real property, equipment, intangible property and debt instruments.

(dd) *Real property* means land, including land improvements, structures and appurtenances thereto, but excludes movable machinery and equipment.

(ee) *Recipient* means an organization receiving financial assistance directly from the NHPRC to carry out a project or program. The term includes public and private institutions of higher education, public and private hospitals, and other quasi-public and private nonprofit organizations such as, but not limited to, community action agencies, research institutes, educational associations, and health centers. The term may include commercial organizations, foreign or international organizations (such as agencies of the United Nations) which are recipients, subrecipients, or contractors or subcontractors of recipients or subrecipients at the discretion of the NHPRC. The term does not include government-owned contractor-operated facilities or research centers providing continued support for mission-oriented, large-scale programs that are government-owned or controlled, or are designated as federally-funded research and development centers.

(ff) *Research and development* means all research activities, both basic and applied, and all development activities that are supported at universities, colleges, and other non-profit institutions. ''Research'' is defined as a systematic study directed toward fuller scientific knowledge or understanding of the subject studied. ''Development'' is the systematic use of knowledge and understanding gained from research directed toward the production of useful materials, devices, systems, or methods, including design and development of prototypes and processes. The term research also includes activities involving the training of individuals in research techniques where such activities utilize the same facilities as other research and development activities and where such activities are not included in the instruction function.

(gg) *Small awards* means a grant or cooperative agreement not exceeding the small purchase threshold fixed at 41 U.S.C. 403(11) (currently $25,000).

(hh) *Subaward* means an award of financial assistance in the form of money, or property in lieu of money, made under an award by a recipient to an eligible subrecipient or by a subrecipient to a lower tier subrecipient. The term includes financial assistance when provided by any legal agreement, even if the agreement is called a contract, but does not include procurement of goods and services nor does it include any form of assistance which is excluded from the definition of ''award'' in paragraph (e) of this section.

(ii) *Subrecipient* means the legal entity to which a subaward is made and which is accountable to the recipient for the use of the funds provided. The

term may include foreign or international organizations (such as agencies of the United Nations) at the discretion of the NHPRC.

(jj) *Supplies* means all personal property excluding equipment, intangible property, and debt instruments as defined in this section, and inventions of a contractor conceived or first actually reduced to practice in the performance of work under a funding agreement (''subject inventions''), as defined in 37 CFR Part 401, ''Rights to Inventions Made by Nonprofit Organizations and Small Business Firms Under Government Grants, Contracts, and Cooperative Agreements.''

(kk) *Suspension* means an action by the NHPRC that temporarily withdraws Federal sponsorship under an award, pending corrective action by the recipient or pending a decision to terminate the award by the NHPRC. Suspension of an award is a separate action from suspension under NARA regulations implementing E.O. 12549 and E.O. 12689, ''Debarment and Suspension'' (36 CFR Part 1209).

(ll) *Termination* means the cancellation of NHPRC sponsorship, in whole or in part, under an agreement at any time prior to the date of completion.

(mm) *Third party in-kind contributions* means the value of non-cash contributions provided by non-Federal third parties. Third party in-kind contributions may be in the form of real property, equipment, supplies and other expendable property, and the value of goods and services directly benefiting and specifically identifiable to the project or program.

(nn) *Unliquidated obligations*, for financial reports prepared on a cash basis, means the amount of obligations incurred by the recipient that have not been paid. For reports prepared on an accrued expenditure basis, they represent the amount of obligations incurred by the recipient for which an outlay has not been recorded.

(oo) *Unobligated balance* means the portion of the funds authorized by the NHPRC that has not been obligated by the recipient and is determined by deducting the cumulative obligations from the cumulative funds authorized.

(pp) *Unrecovered indirect cost* means the difference between the amount awarded and the amount which could have been awarded under the recipient's approved negotiated indirect cost rate.

(qq) *Working capital advance* means a procedure whereby funds are advanced to the recipient to cover its estimated disbursement needs for a given initial period.

### § 1210.3 Effect on other issuances.

For awards subject to this part, all administrative requirements of codified program regulations, program manuals, handbooks and other nonregulatory materials which are inconsistent with the requirements of this part shall be superseded, except to the extent they are required by statute, or authorized in accordance with the deviations provision in § 1210.4.

### § 1210.4 Deviations.

The Office of Management and Budget (OMB) may grant exceptions for classes of grants or recipients subject to the requirements of this part when exceptions are not prohibited by statute. However, in the interest of maximum uniformity, exceptions from the requirements of this part shall be permitted only in unusual circumstances. The NHPRC may apply more restrictive requirements to a class of recipients when approved by OMB. The NHPRC may apply less restrictive requirements when awarding small awards, except for those requirements which are statutory. Exceptions on a case-by-case basis may also be made by the NHPRC.

### § 1210.5 Subawards.

Unless sections of this part specifically exclude subrecipients from coverage, the provisions of this part shall be applied to subrecipients performing work under awards if such subrecipients are institutions of higher education, hospitals or other non-profit organizations. State and local government subrecipients are subject to the provisions of regulations implementing the grants management common rule, ''Uniform Administrative Requirements for Grants and Cooperative Agreements to State and Local Governments,'' published at 36 CFR part 1207.

## Subpart B—Pre-Award Requirements

### § 1210.10 Purpose.

Sections 1210.11 through 1210.17 prescribes forms and instructions and other pre-award matters to be used in applying for NHPRC awards.

### § 1210.11 Pre-award policies.

(a) *Use of grants and cooperative agreements, and contracts.* In each instance, the NHPRC shall decide on the appropriate award instrument (i.e., grant, cooperative agreement, or contract). The Federal Grant and Cooperative Agreement Act (31 U.S.C. 6301–08) governs the use of grants, cooperative agreements and contracts. A grant or cooperative agreement shall be used only when the principal purpose of a transaction is to accomplish a public purpose of support or stimulation authorized by Federal statute. The statutory criterion for choosing between grants and cooperative agreements is that for the latter, ''substantial involvement is expected between the executive agency and the State, local government, or other recipient when carrying out the activity contemplated in the agreement.'' Contracts shall be used when the principal purpose is acquisition of property or services for the direct benefit or use of the Federal Government.

(b) *Public notice and priority setting.* The NHPRC shall notify the public of its intended funding priorities for discretionary grant programs.

### § 1210.12 Forms for applying for Federal assistance.

(a) The NHPRC shall comply with the applicable report clearance requirements of 5 CFR Part 1320, ''Controlling Paperwork Burdens on the Public,'' with regard to all forms used by the NHPRC in place of or as a supplement to the Standard Form 424 (SF–424) series.

(b) Applicants shall use the SF–424 (Application for Federal Assistance) and NA Form 17001 (Budget Form) forms and instructions prescribed by the NHPRC Program Guidelines. OMB Control Number 3095–0004 has been assigned to the Budget Form. OMB Control Number 3095–0013 has been assigned to the NHPRC Program Guidelines.

(c) Applicants shall complete the appropriate sections of the SF–424 (Application for Federal Assistance) indicating whether the application was subject to review by the State Single Point of Contact (SPOC) under E.O. 12372, ''Intergovernmental Review of Federal Programs.'' The name and address of the SPOC for a particular State can be obtained from the NHPRC or the Catalog of Federal Domestic Assistance. The SPOC shall advise the applicant whether the program for which application is made has been selected by that State for review.

### § 1210.13 Debarment and suspension.

The NHPRC and recipients shall comply with the nonprocurement debarment and suspension common rule implementing E.O.s 12549 and 12689, ''Debarment and Suspension'' (36 CFR Part 1209). This common rule restricts subawards and contracts with certain parties that are debarred, suspended or otherwise excluded from or ineligible for participation in Federal assistance programs or activities.

### § 1210.14 Special award conditions.

If an applicant or recipient has a history of poor performance, is not financially stable, has a management system that does not meet the standards prescribed in this part, has not conformed to the terms and conditions of a previous award, or is not otherwise responsible, the NHPRC may impose additional requirements as needed, provided that such applicant or recipient is notified in writing as to: the nature of the additional requirements, the reason why the additional requirements are being imposed, the nature of the corrective action needed, the time allowed for completing the corrective actions, and the method for requesting reconsideration of the additional requirements imposed. Any special conditions shall be promptly removed once the conditions that prompted them have been corrected.

### § 1210.15 Metric system of measurement.

The Metric Conversion Act, as amended by the Omnibus Trade and

Competitiveness Act (15 U.S.C. 205) declares that the metric system is the preferred measurement system for U.S. trade and commerce. The Act requires NARA to establish a date or dates in consultation with the Secretary of Commerce, when the metric system of measurement will be used in NARA's procurements, grants, and other business-related activities. Metric implementation may take longer where the use of the system is initially impractical or likely to cause significant inefficiencies in the accomplishment of federally-funded activities. NARA shall follow the provisions of E.O. 12770, ''Metric Usage in Federal Government Programs.''

### § 1210.16 Resource Conservation and Recovery Act.

Under the Resource Conservation and Recovery Act ((RCRA) (Pub. L. 94–580 codified at 42 U.S.C. 6962), any State agency or agency of a political subdivision of a State which is using appropriated Federal funds must comply with section 6002. Section 6002 requires that preference be given in procurement programs to the purchase of specific products containing recycled materials identified in guidelines developed by the Environmental Protection Agency (EPA) (40 CFR Parts 247 through 254). Accordingly, State and local institutions of higher education, hospitals, and non-profit organizations that receive direct Federal awards or other Federal funds shall give preference in their procurement programs funded with Federal funds to the purchase of recycled products pursuant to the EPA guidelines.

### § 1210.17 Certifications and representations.

Unless prohibited by statute or codified regulation, the NHPRC is authorized to allow recipients to submit certifications and representations required by statute, executive order, or regulation on an annual basis, if they have an ongoing and continuing relationship with the NHPRC. Annual certifications and representations shall be signed by responsible officials with the authority to ensure recipients' compliance with the pertinent requirements.

## Subpart C—Post-Award Requirements

FINANCIAL AND PROGRAM MANAGEMENT

### § 1210.20 Purpose of financial and program management.

Sections 1210.21 through 1210.28 prescribe standards for financial management systems, methods for making payments and rules for: satisfying cost sharing and matching requirements, accounting for program income, budget revision approvals, making audits, determining allowability of cost, and establishing fund availability.

### § 1210.21 Standards for financial management systems.

(a) The NHPRC shall require recipients to relate financial data to performance data and develop unit cost information whenever practical.

(b) Recipients' financial management systems shall provide for the following.

(1) Accurate, current and complete disclosure of the financial results of each NHPRC-sponsored project or program in accordance with the reporting requirements set forth in § 1210.52.

(2) Records that identify adequately the source and application of funds for NHPRC-sponsored activities. These records shall contain information pertaining to NHPRC awards, authorizations, obligations, unobligated balances, assets, outlays, income and interest.

(3) Effective control over and accountability for all funds, property and other assets. Recipients shall adequately safeguard all such assets and assure they are used solely for authorized purposes.

(4) Comparison of outlays with budget amounts for each award. Whenever appropriate, financial information should be related to performance and unit cost data.

(5) Written procedures to minimize the time elapsing between the transfer of funds to the recipient from the U.S. Treasury and the issuance or redemption of checks, warrants or payments by other means for program purposes by the recipient. To the extent that the provisions of the Cash Management Improvement Act (CMIA) (Pub. L. 101–453) govern, payment methods of State

agencies, instrumentalities, and fiscal agents shall be consistent with CMIA Treasury-State Agreements or the CMIA default procedures codified at 31 CFR Part 205, ''Withdrawal of Cash from the Treasury for Advances under Federal Grant and Other Programs.''

(6) Written procedures for determining the reasonableness, allocability and allowability of costs in accordance with the provisions of the applicable Federal cost principles and the terms and conditions of the award.

(7) Accounting records including cost accounting records that are supported by source documentation.

(c) Where the Federal Government guarantees or insures the repayment of money borrowed by the recipient, the NHPRC, at its discretion, may require adequate bonding and insurance if the bonding and insurance requirements of the recipient are not deemed adequate to protect the interest of the Federal Government.

(d) The NHPRC may require adequate fidelity bond coverage where the recipient lacks sufficient coverage to protect the Federal Government's interest.

(e) Where bonds are required in the situations described in this section, the bonds shall be obtained from companies holding certificates of authority as acceptable sureties, as prescribed in 31 CFR Part 223, ''Surety Companies Doing Business with the United States.''

**§ 1210.22 Payment.**

(a) Payment methods shall minimize the time elapsing between the transfer of funds from the United States Treasury and the issuance or redemption of checks, warrants, or payment by other means by the recipients. Payment methods of State agencies or instrumentalities shall be consistent with Treasury-State CMIA agreements or default procedures codified at 31 CFR Part 205.

(b) Recipients will be paid in advance, provided they maintain or demonstrate the willingness to maintain written procedures that minimize the time elapsing between the transfer of funds and disbursement by the recipient, and financial management systems that meet the standards for fund control and accountability as established in § 1210.21. Cash advances to a recipient organization shall be limited to the minimum amounts needed and be timed to be in accordance with the actual, immediate cash requirements of the recipient organization in carrying out the purpose of the approved program or project. The timing and amount of cash advances shall be as close as is administratively feasible to the actual disbursements by the recipient organization for direct program or project costs and the proportionate share of any allowable indirect costs.

(c) Whenever possible, advances shall be consolidated to cover anticipated cash needs for all awards made by the NHPRC to the recipient.

(1) Advance payment mechanisms include, but are not limited to, Treasury check and electronic funds transfer.

(2) Advance payment mechanisms are subject to 31 CFR Part 205.

(3) Recipients can submit requests for advances and reimbursements at least monthly when a predetermined schedule of electronic funds transfer is not used.

(d) Requests for Treasury check advance payment shall be submitted on SF–270, ''Request for Advance or Reimbursement,'' or other forms as may be authorized by OMB. This form is not to be used when Treasury check advance payments are made to the recipient automatically through the use of a predetermined payment schedule or if precluded by special NHPRC instructions for electronic funds transfer.

(e) Reimbursement is the preferred method when the requirements in paragraph (b) of this section cannot be met.

(1) When the reimbursement method is used, the NHPRC shall make payment within 30 days after receipt of the billing, unless the billing is improper.

(2) Recipients can submit a request for reimbursement at least monthly when a predetermined schedule of electronic funds transfer is not used.

(f) If a recipient cannot meet the criteria for advance payments and the NHPRC has determined that reimbursement is not feasible because the recipient lacks sufficient working capital, the NHPRC may provide cash on a working capital advance basis. Under

this procedure, the NHPRC shall advance cash to the recipient to cover its estimated disbursement needs for an initial period generally geared to the awardee's disbursing cycle. Thereafter, the NHPRC shall reimburse the recipient for its actual cash disbursements. The working capital advance method of payment shall not be used for recipients unwilling or unable to provide timely advances to their subrecipient to meet the subrecipient's actual cash disbursements.

(g) To the extent available, recipients shall disburse funds available from repayments to and interest earned on a revolving fund, program income, rebates, refunds, contract settlements, audit recoveries and interest earned on such funds before requesting additional cash payments.

(h) Unless otherwise required by statute, the NHPRC shall not withhold payments for proper charges made by recipients at any time during the project period unless paragraph (h)(1) or (2) of this section apply.

(1) A recipient has failed to comply with the project objectives, the terms and conditions of the award, or NHPRC reporting requirements.

(2) The recipient or subrecipient is delinquent in a debt to the United States as defined in OMB Circular A–129, ''Managing Federal Credit Programs.'' Under such conditions, the NHPRC may, upon reasonable notice, inform the recipient that payments shall not be made for obligations incurred after a specified date until the conditions are corrected or the indebtedness to the Federal Government is liquidated.

(i) Standards governing the use of banks and other institutions as depositories of funds advanced under awards are as follows.

(1) Except for situations described in paragraph (i)(2) of this section, the NHPRC shall not require separate depository accounts for funds provided to a recipient or establish any eligibility requirements for depositories for funds provided to a recipient. However, recipients must be able to account for the receipt, obligation and expenditure of funds.

(2) Advances of NHPRC funds shall be deposited and maintained in insured accounts whenever possible.

(j) Consistent with the national goal of expanding the opportunities for women-owned and minority-owned business enterprises, recipients shall be encouraged to use women-owned and minority-owned banks (a bank which is owned at least 50 percent by women or minority group members).

(k) Recipients shall maintain advances of NHPRC funds in interest bearing accounts, unless paragraphs (k)(1), (2) or (3) of this section apply.

(1) The recipient receives less than $120,000 in Federal awards per year.

(2) The best reasonably available interest bearing account would not be expected to earn interest in excess of $250 per year on Federal cash balances.

(3) The depository would require an average or minimum balance so high that it would not be feasible within the expected Federal and non-Federal cash resources.

(l) In keeping with Electronic Funds Transfer rules (31 CFR Part 206), interest earned should be remitted annually to the Department of Health and Human Services (HHS) Payment Management System through an electronic medium such as the FEDWIRE Deposit system. Recipients which do not have this capability should use a check and mail it to the Payment Management System, P.O. Box 6021, Rockville, MD 20852. Interest amounts up to $250 per year may be retained by the recipient for administrative expense. State universities and hospitals shall comply with CMIA, as it pertains to interest. If an entity subject to CMIA uses its own funds to pay pre-award costs for discretionary awards without prior written approval from the NHPRC, it waives its right to recover the interest under CMIA.

(m) Except as noted elsewhere in this part, only the SF–270, Request for Advance or Reimbursement, shall be authorized for the recipients in requesting advances and reimbursements. The NHPRC requires an original and two copies of this form.

**§ 1210.23 Cost sharing or matching.**

(a) All contributions, including cash and third party in-kind, shall be accepted as part of the recipient's cost sharing or matching when such contributions meet all of the following criteria.

(1) Are verifiable from the recipient's records.

(2) Are not included as contributions for any other federally-assisted project or program.

(3) Are necessary and reasonable for proper and efficient accomplishment of project or program objectives.

(4) Are allowable under the applicable cost principles.

(5) Are not paid by the Federal Government under another award, except where authorized by Federal statute to be used for cost sharing or matching.

(6) Are provided for in the approved budget when required by the NHPRC.

(7) Conform to other provisions of this part, as applicable.

(b) Unrecovered indirect costs may be included as part of cost sharing or matching only with the prior approval of the NHPRC.

(c) Values for recipient contributions of services and property shall be established in accordance with the applicable cost principles. If the NHPRC authorizes recipients to donate buildings or land for construction/facilities acquisition projects or long-term use, the value of the donated property for cost sharing or matching shall be the lesser of paragraph (c)(1) or (2) of this section.

(1) The certified value of the remaining life of the property recorded in the recipient's accounting records at the time of donation.

(2) The current fair market value. However, when there is sufficient justification, the NHPRC may approve the use of the current fair market value of the donated property, even if it exceeds the certified value at the time of donation to the project.

(d) Volunteer services furnished by professional and technical personnel, consultants, and other skilled and unskilled labor may be counted as cost sharing or matching if the service is an integral and necessary part of an approved project or program. Rates for volunteer services shall be consistent with those paid for similar work in the recipient's organization. In those instances in which the required skills are not found in the recipient organization, rates shall be consistent with those paid for similar work in the labor market in which the recipient competes for the kind of services involved. In either case, paid fringe benefits that are reasonable, allowable, and allocable may be included in the valuation.

(e) When an employer other than the recipient furnishes the services of an employee, these services shall be valued at the employee's regular rate of pay (plus an amount of fringe benefits that are reasonable, allowable, and allocable, but exclusive of overhead costs), provided these services are in the same skill for which the employee is normally paid.

(f) Donated supplies may include such items as expendable equipment, office supplies, laboratory supplies or workshop and classroom supplies. Value assessed to donated supplies included in the cost sharing or matching share shall be reasonable and shall not exceed the fair market value of the property at the time of the donation.

(g) The method used for determining cost sharing or matching for donated equipment, buildings and land for which title passes to the recipient may differ according to the purpose of the award, if paragraph (g)(1) or (2) of this section apply.

(1) If the purpose of the award is to assist the recipient in the acquisition of equipment, buildings or land, the total value of the donated property may be claimed as cost sharing or matching.

(2) If the purpose of the award is to support activities that require the use of equipment, buildings or land, normally only depreciation or use charges for equipment and buildings may be made. However, the full value of equipment or other capital assets and fair rental charges for land may be allowed, provided that the NHPRC has approved the charges.

(h) The value of donated property shall be determined in accordance with the usual accounting policies of the recipient, with the following qualifications.

(1) The value of donated land and buildings shall not exceed its fair market value at the time of donation to the recipient as established by an independent appraiser (e.g., certified real property appraiser or General Services Administration representative) and certified by a responsible official of the recipient.

(2) The value of donated equipment shall not exceed the fair market value of equipment of the same age and condition at the time of donation.

(3) The value of donated space shall not exceed the fair rental value of comparable space as established by an independent appraisal of comparable space and facilities in a privately-owned building in the same locality.

(4) The value of loaned equipment shall not exceed its fair rental value.

(5) The following requirements pertain to the recipient's supporting records for in-kind contributions from third parties.

(i) Volunteer services shall be documented and, to the extent feasible, supported by the same methods used by the recipient for its own employees.

(ii) The basis for determining the valuation for personal service, material, equipment, buildings and land shall be documented.

### § 1210.24 Program income.

(a) The NHPRC applies the standards set forth in this section in requiring recipient organizations to account for program income related to projects financed in whole or in part with Federal funds.

(b) Except as provided in paragraph (h) of this section, program income earned during the project period shall be retained by the recipient and, in accordance with these regulations or the terms and conditions of the award, shall be used in one or more of the ways listed in the following.

(1) Added to funds committed to the project by the NHPRC and recipient and used to further eligible project or program objectives.

(2) Used to finance the non-Federal share of the project or program.

(3) Deducted from the total project or program allowable cost in determining the net allowable costs on which the Federal share of costs is based.

(c) When the NHPRC authorizes the disposition of program income as described in paragraphs (b)(1) or (b)(2) of this section, program income in excess of any limits stipulated shall be used in accordance with paragraph (b)(3) of this section.

(d) In the event that the NHPRC does not specify in its regulations or the terms and conditions of the award how program income is to be used, paragraph (b)(3) of this section shall apply automatically to all projects or programs except research. For awards that support research, paragraph (b)(1) of this section shall apply automatically unless the NHPRC indicates in the terms and conditions another alternative on the award or the recipient is subject to special award conditions, as indicated in § 1210.14.

(e) Unless NHPRC regulations or the terms and conditions of the award provide otherwise, recipients shall have no obligation to the Federal Government regarding program income earned after the end of the project period.

(f) If authorized by NHPRC regulations or the terms and conditions of the award, costs incident to the generation of program income may be deducted from gross income to determine program income, provided these costs have not been charged to the award.

(g) Proceeds from the sale of property shall be handled in accordance with the requirements of the Property Standards (See §§ 1210.30 through 1210.37).

(h) Unless NHPRC regulations or the terms and condition of the award provide otherwise, recipients shall have no obligation to the Federal Government with respect to program income earned from license fees and royalties for copyrighted material, patents, patent applications, trademarks, and inventions produced under an award. However, Patent and Trademark Amendments (35 U.S.C. 18) apply to inventions made under an experimental, developmental, or research award.

### § 1210.25 Revision of budget and program plans.

(a) The budget plan is the financial expression of the project or program as approved during the award process. It may include either the Federal and non-Federal share, or only the Federal

share, depending upon NHPRC requirements. It shall be related to performance for program evaluation purposes whenever appropriate.

(b) Recipients are required to report deviations from budget and program plans, and request prior approvals for budget and program plan revisions, in accordance with this section.

(c) Recipients shall request prior approvals from the NHPRC for one or more of the following program or budget related reasons.

(1) Change in the scope or the objective of the project or program (even if there is no associated budget revision requiring prior written approval).

(2) Change in a key person specified in the application or award document.

(3) The absence for more than three months, or a 25 percent reduction in time devoted to the project, by the approved project director or principal investigator.

(4) The need for additional NHPRC funding.

(5) The transfer of amounts budgeted for indirect costs to absorb increases in direct costs, or vice versa, if approval is required by the NHPRC.

(6) The inclusion, unless waived by the NHPRC, of costs that require prior approval in accordance with OMB Circular A–21, ''Cost Principles for Institutions of Higher Education,'' OMB Circular A–122, ''Cost Principles for Non-Profit Organizations,'' or 45 CFR Part 74 Appendix E, ''Principles for Determining Costs Applicable to Research and Development under Grants and Contracts with Hospitals,'' or 48 CFR Part 31, ''Contract Cost Principles and Procedures,'' as applicable.

(7) The transfer of funds allotted for training allowances (direct payment to trainees) to other categories of expense.

(8) Unless described in the application and funded in the approved awards, the subaward, transfer or contracting out of any work under an award. This provision does not apply to the purchase of supplies, material, equipment or general support services.

(d) No other prior approval requirements for specific items will be imposed unless a deviation has been approved by OMB.

(e) Except for requirements listed in paragraphs (c)(1) and (c)(4) of this section, the NHPRC is authorized, at their option, to waive cost-related and administrative prior written approvals required by this Circular and OMB Circulars A–21 and A–122. Such waivers may include authorizing recipients to do any one or more of the following.

(1) Incur pre-award costs 90 calendar days prior to award or more than 90 calendar days with the prior approval of the NHPRC. All pre-award costs are incurred at the recipient's risk (i.e., the NHPRC is under no obligation to reimburse such costs if for any reason the recipient does not receive an award or if the award is less than anticipated and inadequate to cover such costs).

(2) Initiate a one-time extension of the expiration date of the award of up to 12 months unless one or more of the following conditions apply. For one-time extensions, the recipient must notify the NHPRC in writing with the supporting reasons and revised expiration date at least 10 days before the expiration date specified in the award. This one-time extension may not be exercised merely for the purpose of using unobligated balances.

(i) The terms and conditions of award prohibit the extension.

(ii) The extension requires additional NHPRC funds.

(iii) The extension involves any change in the approved objectives or scope of the project.

(3) Carry forward unobligated balances to subsequent funding periods.

(4) For awards that support research, unless the NHPRC provides otherwise in the award or in NHPRC's regulations, the prior approval requirements described in paragraph (e) of this section are automatically waived (i.e., recipients need not obtain such prior approvals) unless one of the conditions included in paragraph (e)(2) of this section applies.

(f) The NHPRC may, at its option, restrict the transfer of funds among direct cost categories or programs, functions and activities for awards in which the Federal share of the project exceeds $100,000 and the cumulative amount of such transfers exceeds or is expected to exceed 10 percent of the total budget as last approved by the

NHPRC. The NHPRC shall not permit a transfer that would cause any Federal appropriation or part thereof to be used for purposes other than those consistent with the original intent of the appropriation.

(g) All other changes to nonconstruction budgets, except for the changes described in paragraph (j), do not require prior approval.

(h) [Reserved]

(i) No other prior approval requirements for specific items will be imposed unless a deviation has been approved by OMB.

(j) The NHPRC shall require recipients to notify the NHPRC in writing promptly whenever the amount of Federal authorized funds is expected to exceed the needs of the recipient for the project period by more than $5,000 or five percent of the NHPRC award, whichever is greater. This notification shall not be required if an application for additional funding is submitted for a continuation award.

(k) When requesting approval for budget revisions, recipients shall use the budget forms that were used in the application unless the NHPRC indicates a letter of request suffices.

(l) Within 30 calendar days from the date of receipt of the request for budget revisions, the NHPRC shall review the request and notify the recipient whether the budget revisions have been approved. If the revision is still under consideration at the end of 30 calendar days, the NHPRC shall inform the recipient in writing of the date when the recipient may expect the decision.

### § 1210.26 Non-Federal audits.

(a) Recipients and subrecipients that are institutions of higher education or other non-profit organizations (including hospitals) shall be subject to the audit requirements contained in the Single Audit Act Amendments of 1996 (31 U.S.C. 7501–7507) and revised OMB Circular A–133, ''Audits of States, Local Governments, and Non-Profit Organizations.''

(b) State and local governments shall be subject to the audit requirements contained in the Single Audit Act Amendments of 1996 (31 U.S.C. 7501–7507) and revised OMB Circular A–133, ''Audits of States, Local Governments, and Non-Profit Organizations.''

(c) For-profit hospitals not covered by the audit provisions of revised OMB Circular A–133 shall be subject to the audit requirements of the Federal awarding agencies.

[62 FR 45939, 45943, Aug. 29, 1997]

### § 1210.27 Allowable costs.

For each kind of recipient, there is a set of Federal principles for determining allowable costs. Allowability of costs shall be determined in accordance with the cost principles applicable to the entity incurring the costs. Thus, allowability of costs incurred by State, local or federally-recognized Indian tribal governments is determined in accordance with the provisions of OMB Circular A–87, ''Cost Principles for State and Local Governments.'' The allowability of costs incurred by non-profit organizations is determined in accordance with the provisions of OMB Circular A–122, ''Cost Principles for Non-Profit Organizations.'' The allowability of costs incurred by institutions of higher education is determined in accordance with the provisions of OMB Circular A–21, ''Cost Principles for Educational Institutions.'' The allowability of costs incurred by hospitals is determined in accordance with the provisions of Appendix E of 45 CFR Part 74, ''Principles for Determining Costs Applicable to Research and Development Under Grants and Contracts with Hospitals.'' The allowability of costs incurred those non-profit organizations listed in Attachment C to Circular A–122 is determined in accordance with the provisions of the Federal Acquisition Regulation (FAR) at 48 CFR Part 31.

### § 1210.28 Period of availability of funds.

Where a funding period is specified, a recipient may charge to the grant only allowable costs resulting from obligations incurred during the funding period and any pre-award costs authorized by the NHPRC.

PROPERTY STANDARDS

### § 1210.30 Purpose of property standards.

Sections 1210.31 through 1210.37 set forth uniform standards governing management and disposition of property furnished by the Federal Government whose cost was charged to a project supported by an NHPRC award. The NHPRC requires recipients to observe these standards under awards and shall not impose additional requirements, unless specifically required by Federal statute. The recipient may use its own property management standards and procedures provided it observes the provisions of §§ 1210.31 through 1210.37.

### § 1210.31 Insurance coverage.

Recipients shall, at a minimum, provide the equivalent insurance coverage for real property and equipment acquired with NHPRC funds as provided to property owned by the recipient. Federally-owned property need not be insured unless required by the terms and conditions of the award.

### § 1210.32 Real property.

The NHPRC shall prescribe requirements for recipients concerning the use and disposition of real property acquired in whole or in part under awards. Unless otherwise provided by statute, such requirements, at a minimum, shall contain the following.

(a) Title to real property shall vest in the recipient subject to the condition that the recipient shall use the real property for the authorized purpose of the project as long as it is needed and shall not encumber the property without approval of the NHPRC.

(b) The recipient shall obtain written approval by the NHPRC for the use of real property in other federally-sponsored projects when the recipient determines that the property is no longer needed for the purpose of the original project. Use in other projects shall be limited to those under federally-sponsored projects (i.e., awards) or programs that have purposes consistent with those authorized for support by the NHPRC.

(c) When the real property is no longer needed as provided in paragraphs (a) and (b) of this section, the recipient shall request disposition instructions from the NHPRC or its successor Federal awarding agency. The NHPRC shall observe one or more of the following disposition instructions.

(1) The recipient may be permitted to retain title without further obligation to the Federal Government after it compensates the Federal Government for that percentage of the current fair market value of the property attributable to the Federal participation in the project.

(2) The recipient may be directed to sell the property under guidelines provided by the NHPRC and pay the Federal Government for that percentage of the current fair market value of the property attributable to the Federal participation in the project (after deducting actual and reasonable selling and fix-up expenses, if any, from the sales proceeds). When the recipient is authorized or required to sell the property, proper sales procedures shall be established that provide for competition to the extent practicable and result in the highest possible return.

(3) The recipient may be directed to transfer title to the property to the Federal Government or to an eligible third party provided that, in such cases, the recipient shall be entitled to compensation for its attributable percentage of the current fair market value of the property.

### § 1210.33 Federally-owned and exempt property.

(a) Federally-owned property.

(1) Title to federally-owned property remains vested in the Federal Government. Recipients shall submit annually an inventory listing of federally-owned property in their custody to the NHPRC. Upon completion of the award or when the property is no longer needed, the recipient shall report the property to the NHPRC for further Federal agency utilization.

(2) If the NHPRC has no further need for the property, it shall be declared excess and reported to the General Services Administration. Appropriate instructions shall be issued to the recipient by the NHPRC.

(b) Exempt property. When statutory authority exists, the NHPRC has the

option to vest title to property acquired with Federal funds in the recipient without further obligation to the Federal Government and under conditions the NHPRC considers appropriate. Such property is ''exempt property.'' Should the NHPRC not establish conditions, title to exempt property upon acquisition shall vest in the recipient without further obligation to the Federal Government.

**§ 1210.34 Equipment.**

(a) Title to equipment acquired by a recipient with NHPRC funds shall vest in the recipient, subject to conditions of this section.

(b) The recipient shall not use equipment acquired with NHPRC funds to provide services to non-Federal outside organizations for a fee that is less than private companies charge for equivalent services, unless specifically authorized by Federal statute, for as long as the Federal Government retains an interest in the equipment.

(c) The recipient shall use the equipment in the project or program for which it was acquired as long as needed, whether or not the project or program continues to be supported by Federal funds and shall not encumber the property without approval of the NHPRC. When no longer needed for the original project or program, the recipient shall use the equipment in connection with its other federally-sponsored activities, in the following order of priority:

(1) Activities sponsored by the NHPRC which funded the original project, then

(2) Activities sponsored by other Federal awarding agencies.

(d) During the time that equipment is used on the project or program for which it was acquired, the recipient shall make it available for use on other projects or programs if such other use will not interfere with the work on the project or program for which the equipment was originally acquired. First preference for such other use shall be given to other projects or programs sponsored by the NHPRC that financed the equipment; second preference shall be given to projects or programs sponsored by other Federal awarding agencies. If the equipment is owned by the Federal Government, use on other activities not sponsored by the Federal Government shall be permissible if authorized by the NHPRC. User charges shall be treated as program income.

(e) When acquiring replacement equipment, the recipient may use the equipment to be replaced as trade-in or sell the equipment and use the proceeds to offset the costs of the replacement equipment subject to the approval of the NHPRC.

(f) The recipient's property management standards for equipment acquired with Federal funds and federally-owned equipment shall include all of the following.

(1) Equipment records shall be maintained accurately and shall include the following information.

(i) A description of the equipment.

(ii) Manufacturer's serial number, model number, Federal stock number, national stock number, or other identification number.

(iii) Source of the equipment, including the award number.

(iv) Whether title vests in the recipient or the Federal Government.

(v) Acquisition date (or date received, if the equipment was furnished by the Federal Government) and cost.

(vi) Information from which one can calculate the percentage of Federal participation in the cost of the equipment (not applicable to equipment furnished by the Federal Government).

(vii) Location and condition of the equipment and the date the information was reported.

(viii) Unit acquisition cost.

(ix) Ultimate disposition data, including date of disposal and sales price or the method used to determine current fair market value where a recipient compensates the NHPRC for its share.

(2) Equipment owned by the Federal Government shall be identified to indicate Federal ownership.

(3) A physical inventory of equipment shall be taken and the results reconciled with the equipment records at least once every two years. Any differences between quantities determined by the physical inspection and those shown in the accounting records shall be investigated to determine the causes of the difference. The recipient

shall, in connection with the inventory, verify the existence, current utilization, and continued need for the equipment.

(4) A control system shall be in effect to insure adequate safeguards to prevent loss, damage, or theft of the equipment. Any loss, damage, or theft of equipment shall be investigated and fully documented; if the equipment was owned by the Federal Government, the recipient shall promptly notify the NHPRC.

(5) Adequate maintenance procedures shall be implemented to keep the equipment in good condition.

(6) Where the recipient is authorized or required to sell the equipment, proper sales procedures shall be established which provide for competition to the extent practicable and result in the highest possible return.

(g) When the recipient no longer needs the equipment, the equipment may be used for other activities in accordance with the following standards. For equipment with a current per unit fair market value of $5,000 or more, the recipient may retain the equipment for other uses provided that compensation is made to the NHPRC or its successor. The amount of compensation shall be computed by applying the percentage of Federal participation in the cost of the original project or program to the current fair market value of the equipment. If the recipient has no need for the equipment, the recipient shall request disposition instructions from the NHPRC. The NHPRC shall determine whether the equipment can be used to meet the NHPRC's requirements. If no requirement exists within the NHPRC, the availability of the equipment shall be reported to the General Services Administration by the NHPRC to determine whether a requirement for the equipment exists in other Federal agencies. The NHPRC shall issue instructions to the recipient no later than 120 calendar days after the recipient's request and the following procedures shall govern.

(1) If so instructed or if disposition instructions are not issued within 120 calendar days after the recipient's request, the recipient shall sell the equipment and reimburse the NHPRC an amount computed by applying to the sales proceeds the percentage of Federal participation in the cost of the original project or program. However, the recipient shall be permitted to deduct and retain from the Federal share $500 or ten percent of the proceeds, whichever is less, for the recipient's selling and handling expenses.

(2) If the recipient is instructed to ship the equipment elsewhere, the recipient shall be reimbursed by the Federal Government by an amount which is computed by applying the percentage of the recipient's participation in the cost of the original project or program to the current fair market value of the equipment, plus any reasonable shipping or interim storage costs incurred.

(3) If the recipient is instructed to otherwise dispose of the equipment, the recipient shall be reimbursed by the NHPRC for such costs incurred in its disposition.

(4) The NHPRC reserves the right to transfer the title to the Federal Government or to a third party named by the Federal Government when such third party is otherwise eligible under existing statutes. Such transfer shall be subject to the following standards.

(i) The equipment shall be appropriately identified in the award or otherwise made known to the recipient in writing.

(ii) The NHPRC shall issue disposition instructions within 120 calendar days after receipt of a final inventory. The final inventory shall list all equipment acquired with grant funds and federally-owned equipment. If the NHPRC fails to issue disposition instructions within the 120 calendar day period, the recipient shall apply the standards of this section, as appropriate.

(iii) When the NHPRC exercises its right to take title, the equipment shall be subject to the provisions for federally-owned equipment.

### § 1210.35 Supplies and other expendable property.

(a) Title to supplies and other expendable property shall vest in the recipient upon acquisition. If there is a residual inventory of unused supplies exceeding $5,000 in total aggregate value upon termination or completion

of the project or program and the supplies are not needed for any other federally-sponsored project or program, the recipient shall retain the supplies for use on non-Federal sponsored activities or sell them, but shall, in either case, compensate the NHPRC for its share. The amount of compensation shall be computed in the same manner as for equipment.

(b) The recipient shall not use supplies acquired with NHPRC funds to provide services to non-Federal outside organizations for a fee that is less than private companies charge for equivalent services, unless specifically authorized by Federal statute as long as the Federal Government retains an interest in the supplies.

**§ 1210.36 Intangible property.**

(a) The recipient may copyright any work that is subject to copyright and was developed, or for which ownership was purchased, under an award. The NHPRC reserves a royalty-free, nonexclusive and irrevocable right to reproduce, publish, or otherwise use the work for Federal purposes, and to authorize others to do so.

(b) Recipients are subject to applicable regulations governing patents and inventions, including government-wide regulations issued by the Department of Commerce at 37 CFR Part 401, ''Rights to Inventions Made by Nonprofit Organizations and Small Business Firms Under Government Grants, Contracts and Cooperative Agreements.''

(c) The Federal Government has the right to:

(1) Obtain, reproduce, publish or otherwise use the data first produced under an award; and

(2) Authorize others to receive, reproduce, publish, or otherwise use such data for Federal purposes.

(d) (1) In addition, in response to a Freedom of Information Act (FOIA) request for research data relating to published research findings produced under an award that were used by the Federal Government in developing an agency action that has the force and effect of law, the NHPRC shall request, and the recipient shall provide, within a reasonable time, the research data so that they can be made available to the public through the procedures established under the FOIA. If the NHPRC obtains the research data solely in response to a FOIA request, the agency may charge the requester a reasonable fee equaling the full incremental cost of obtaining the research data. This fee should reflect costs incurred by the agency, the recipient, and applicable subrecipients. This fee is in addition to any fees the agency may assess under the FOIA (5 U.S.C. 552(a)(4)(A)).

(2) The following definitions apply for purposes of this paragraph (d):

(i) *Research data* is defined as the recorded factual material commonly accepted in the scientific community as necessary to validate research findings, but not any of the following: preliminary analyses, drafts of scientific papers, plans for future research, peer reviews, or communications with colleagues. This ''recorded'' material excludes physical objects (e.g., laboratory samples). *Research data* also do not include:

(A) Trade secrets, commercial information, materials necessary to be held confidential by a researcher until they are published, or similar information which is protected under law; and

(B) Personnel and medical information and similar information the disclosure of which would constitute a clearly unwarranted invasion of personal privacy, such as information that could be used to identify a particular person in a research study.

(ii) *Published* is defined as either when:

(A) Research findings are published in a peer-reviewed scientific or technical journal; or

(B) A Federal agency publicly and officially cites the research findings in support of an agency action that has the force and effect of law.

(iii) *Used by the Federal Government in developing an agency action that has the force and effect of law* is defined as when an agency publicly and officially cites the research findings in support of an agency action that has the force and effect of law.

(e) Title to intangible property and debt instruments acquired under an award or subaward vests upon acquisition in the recipient. The recipient

shall use that property for the originally-authorized purpose, and the recipient shall not encumber the property without approval of the NHPRC. When no longer needed for the originally authorized purpose, disposition of the intangible property shall occur in accordance with the provisions of § 1210.34(g).

[60 FR 53515, Oct. 16, 1995, as amended at 65 FR 14407, 14417, Mar. 16, 2000]

### § 1210.37 Property trust relationship.

Real property, equipment, intangible property and debt instruments that are acquired or improved with NHPRC funds shall be held in trust by the recipient as trustee for the beneficiaries of the project or program under which the property was acquired or improved. The NHPRC may require recipients to record liens or other appropriate notices of record to indicate that personal or real property has been acquired or improved with Federal funds and that use and disposition conditions apply to the property.

PROCUREMENT STANDARDS

### § 1210.40 Purpose of procurement standards.

Sections 1210.41 through 1210.48 set forth standards for use by recipients in establishing procedures for the procurement of supplies and other expendable property, equipment, real property and other services with NHPRC funds. These standards are furnished to ensure that such materials and services are obtained in an effective manner and in compliance with the provisions of applicable Federal statutes and executive orders. No additional procurement standards or requirements shall be imposed by the NHPRC upon recipients, unless specifically required by Federal statute or executive order or approved by OMB.

### § 1210.41 Recipient responsibilities.

The standards contained in this section do not relieve the recipient of the contractual responsibilities arising under its contract(s). The recipient is the responsible authority, without recourse to the NHPRC, regarding the settlement and satisfaction of all contractual and administrative issues arising out of procurements entered into in support of an award or other agreement. This includes disputes, claims, protests of award, source evaluation or other matters of a contractual nature. Matters concerning violation of statute are to be referred to such Federal, State or local authority as may have proper jurisdiction.

### § 1210.42 Codes of conduct.

The recipient shall maintain written standards of conduct governing the performance of its employees engaged in the award and administration of contracts. No employee, officer, or agent shall participate in the selection, award, or administration of a contract supported by Federal funds if a real or apparent conflict of interest would be involved. Such a conflict would arise when the employee, officer, or agent, any member of his or her immediate family, his or her partner, or an organization which employs or is about to employ any of the parties indicated herein, has a financial or other interest in the firm selected for an award. The officers, employees, and agents of the recipient shall neither solicit nor accept gratuities, favors, or anything of monetary value from contractors, or parties to subagreements. However, recipients may set standards for situations in which the financial interest is not substantial or the gift is an unsolicited item of nominal value. The standards of conduct shall provide for disciplinary actions to be applied for violations of such standards by officers, employees, or agents of the recipient.

### § 1210.43 Competition.

All procurement transactions shall be conducted in a manner to provide, to the maximum extent practical, open and free competition. The recipient shall be alert to organizational conflicts of interest as well as noncompetitive practices among contractors that may restrict or eliminate competition or otherwise restrain trade. In order to ensure objective contractor performance and eliminate unfair competitive advantage, contractors that develop or draft specifications, requirements, statements of work, invitations for bids and/or requests for proposals shall

be excluded from competing for such procurements. Awards shall be made to the bidder or offeror whose bid or offer is responsive to the solicitation and is most advantageous to the recipient, price, quality and other factors considered. Solicitations shall clearly set forth all requirements that the bidder or offeror shall fulfill in order for the bid or offer to be evaluated by the recipient. Any and all bids or offers may be rejected when it is in the recipient's interest to do so.

**§ 1210.44 Procurement procedures.**

(a) All recipients shall establish written procurement procedures. These procedures shall provide for, at a minimum, that paragraphs (a) (1), (2) and (3) of this section apply.

(1) Recipients avoid purchasing unnecessary items.

(2) Where appropriate, an analysis is made of lease and purchase alternatives to determine which would be the most economical and practical procurement for the Federal Government.

(3) Solicitations for goods and services provide for all of the following.

(i) A clear and accurate description of the technical requirements for the material, product or service to be procured. In competitive procurements, such a description shall not contain features which unduly restrict competition.

(ii) Requirements which the bidder/offeror must fulfill and all other factors to be used in evaluating bids or proposals.

(iii) A description, whenever practicable, of technical requirements in terms of functions to be performed or performance required, including the range of acceptable characteristics or minimum acceptable standards.

(iv) The specific features of ''brand name or equal'' descriptions that bidders are required to meet when such items are included in the solicitation.

(v) The acceptance, to the extent practicable and economically feasible, of products and services dimensioned in the metric system of measurement.

(vi) Preference, to the extent practicable and economically feasible, for products and services that conserve natural resources and protect the environment and are energy efficient.

(b) Positive efforts shall be made by recipients to utilize small businesses, minority-owned firms, and women's business enterprises, whenever possible. Recipients of Federal awards shall take all of the following steps to further this goal.

(1) Ensure that small businesses, minority-owned firms, and women's business enterprises are used to the fullest extent practicable.

(2) Make information on forthcoming opportunities available and arrange time frames for purchases and contracts to encourage and facilitate participation by small businesses, minority-owned firms, and women's business enterprises.

(3) Consider in the contract process whether firms competing for larger contracts intend to subcontract with small businesses, minority-owned firms, and women's business enterprises.

(4) Encourage contracting with consortiums of small businesses, minority-owned firms and women's business enterprises when a contract is too large for one of these firms to handle individually.

(5) Use the services and assistance, as appropriate, of such organizations as the Small Business Administration and the Department of Commerce's Minority Business Development Agency in the solicitation and utilization of small businesses, minority-owned firms and women's business enterprises.

(c) The type of procuring instruments used (e.g., fixed price contracts, cost reimbursable contracts, purchase orders, and incentive contracts) shall be determined by the recipient but shall be appropriate for the particular procurement and for promoting the best interest of the program or project involved. The ''cost-plus-a-percentage-of-cost'' or ''percentage of construction cost'' methods of contracting shall not be used.

(d) Contracts shall be made only with responsible contractors who possess the potential ability to perform successfully under the terms and conditions of the proposed procurement. Consideration shall be given to such matters as contractor integrity, record of past performance, financial and technical resources or accessibility to

other necessary resources. In certain circumstances, contracts with certain parties are restricted by NARA implementation of E.O.s 12549 and 12689, ''Debarment and Suspension'' (36 CFR Part 1209).

(e) Recipients shall, on request, make available for the NHPRC, pre-award review and procurement documents, such as request for proposals or invitations for bids, independent cost estimates, etc., when any of the following conditions apply.

(1) A recipient's procurement procedures or operation fails to comply with the procurement standards in the NHPRC's implementation of this part.

(2) The procurement is expected to exceed the small purchase threshold fixed at 41 U.S.C. 403 (11) (currently $25,000) and is to be awarded without competition or only one bid or offer is received in response to a solicitation.

(3) The procurement, which is expected to exceed the small purchase threshold, specifies a ''brand name'' product.

(4) The proposed award over the small purchase threshold is to be awarded to other than the apparent low bidder under a sealed bid procurement.

(5) A proposed contract modification changes the scope of a contract or increases the contract amount by more than the amount of the small purchase threshold.

### § 1210.45 Cost and price analysis.

Some form of cost or price analysis shall be made and documented in the procurement files in connection with every procurement action. Price analysis may be accomplished in various ways, including the comparison of price quotations submitted, market prices and similar indicia, together with discounts. Cost analysis is the review and evaluation of each element of cost to determine reasonableness, allocability and allowability.

### § 1210.46 Procurement records.

Procurement records and files for purchases in excess of the small purchase threshold shall include the following at a minimum:

(a) Basis for contractor selection,

(b) Justification for lack of competition when competitive bids or offers are not obtained, and

(c) Basis for award cost or price.

### § 1210.47 Contract administration.

A system for contract administration shall be maintained to ensure contractor conformance with the terms, conditions and specifications of the contract and to ensure adequate and timely follow up of all purchases. Recipients shall evaluate contractor performance and document, as appropriate, whether contractors have met the terms, conditions and specifications of the contract.

### § 1210.48 Contract provisions.

The recipient shall include, in addition to provisions to define a sound and complete agreement, the following provisions in all contracts. The following provisions shall also be applied to subcontracts.

(a) Contracts in excess of the small purchase threshold shall contain contractual provisions or conditions that allow for administrative, contractual, or legal remedies in instances in which a contractor violates or breaches the contract terms, and provide for such remedial actions as may be appropriate.

(b) All contracts in excess of the small purchase threshold shall contain suitable provisions for termination by the recipient, including the manner by which termination shall be effected and the basis for settlement. In addition, such contracts shall describe conditions under which the contract may be terminated for default as well as conditions where the contract may be terminated because of circumstances beyond the control of the contractor.

(c) All negotiated contracts (except those for less than the small purchase threshold) awarded by recipients shall include a provision to the effect that the recipient, the NHPRC, the Comptroller General of the United States, or any of their duly authorized representatives, shall have access to any books, documents, papers and records of the contractor which are directly pertinent to a specific program for the purpose of making audits, examinations, excerpts and transcriptions.

(d) All contracts, including small purchases, awarded by recipients and their contractors shall contain the procurement provisions of Appendix A to this Part, as applicable.

REPORTS AND RECORDS

### § 1210.50 Purpose of reports and records.

Sections 1210.51 through 1210.53 set forth the procedures for monitoring and reporting on the recipient's financial and program performance and the necessary standard reporting forms. They also set forth record retention requirements.

### § 1210.51 Monitoring and reporting program performance.

(a) Recipients are responsible for managing and monitoring each project, program, subaward, function or activity supported by the award. Recipients shall monitor subawards to ensure subrecipients have met the audit requirements as delineated in § 1210.26.

(b) Except as provided in paragraph (f) of this section, interim performance reports shall be submitted every six months and shall be due 30 days after the reporting period; final reports shall be due 90 calendar days after the end of the grant period.

(c) If inappropriate, a final performance report shall not be required after completion of the project.

(d) When required, performance reports shall generally contain, for each award, brief information on each of the following.

(1) A comparison of actual accomplishments with the goals and objectives established for the period, the findings of the investigator, or both. Whenever appropriate and the output of programs or projects can be readily quantified, such quantitative data should be related to cost data for computation of unit costs.

(2) Reasons why established goals were not met, if appropriate.

(3) Other pertinent information including, when appropriate, analysis and explanation of cost overruns or high unit costs.

(e) Recipients shall not be required to submit more than the original and two copies of performance reports.

(f) Recipients shall immediately notify the NHPRC of developments that have a significant impact on the award-supported activities. Also, notification shall be given in the case of problems, delays, or adverse conditions which materially impair the ability to meet the objectives of the award. This notification shall include a statement of the action taken or contemplated, and any assistance needed to resolve the situation.

(g) The NHPRC may make site visits, as needed.

(h) The NHPRC shall comply with clearance requirements of 5 CFR Part 1320 when requesting performance data from recipients.

### § 1210.52 Financial reporting.

(a) The following forms or such other forms as may be approved by OMB are authorized for obtaining financial information from recipients.

(1) SF–269 or SF–269A, Financial Status Report.

(i) The NHPRC requires recipients to use the SF–269 or SF–269A to report the status of funds for all nonconstruction projects or programs. The NHPRC may, however, have the option of not requiring the SF–269 or SF–269A when the SF–270, Request for Advance or Reimbursement, or SF–272, Report of Federal Cash Transactions, is determined to provide adequate information to meet its needs, except that a final SF–269 or SF–269A shall be required at the completion of the project when the SF–270 is used only for advances.

(ii) The report may be on a cash or accrual basis.

(iii) The NHPRC shall determine the frequency of the Financial Status Report for each project or program, considering the size and complexity of the particular project or program. However, the report shall not be required more frequently than quarterly or less frequently than annually. A final report shall be required at the completion of the agreement.

(iv) The NHPRC shall require recipients to submit the SF–269 or SF–269A (an original and no more than two copies) no later than 30 days after the end of each specified reporting period for quarterly and semi-annual reports, and 90 calendar days for annual and final

reports. Extensions of reporting due dates may be approved by NHPRC upon request of the recipient.

(2) SF–272, Report of Federal Cash Transactions.

(i) When funds are advanced to recipients the NHPRC shall require each recipient to submit the SF–272 and, when necessary, its continuation sheet, SF–272a. The NHPRC shall use this report to monitor cash advanced to recipients and to obtain disbursement information for each agreement with the recipients.

(ii) The NHPRC may require forecasts of Federal cash requirements in the ''Remarks'' section of the report.

(iii) When practical and deemed necessary, the NHPRC may require recipients to report in the ''Remarks'' section the amount of cash advances received in excess of three days. Recipients shall provide short narrative explanations of actions taken to reduce the excess balances.

(iv) Recipients shall be required to submit not more than the original and two copies of the SF–272 15 calendar days following the end of each quarter. The NHPRC may require a monthly report from those recipients receiving advances totaling $1 million or more per year.

(v) The NHPRC may waive the requirement for submission of the SF–272 for any one of the following reasons:

(A) When monthly advances do not exceed $25,000 per recipient, provided that such advances are monitored through other forms contained in this section;

(B) If, in the NHPRC's opinion, the recipient's accounting controls are adequate to minimize excessive Federal advances; or,

(C) When the electronic payment mechanisms provide adequate data.

(b) When the NHPRC needs additional information or more frequent reports, the following shall be observed.

(1) When additional information is needed to comply with legislative requirements, the NHPRC shall issue instructions to require recipients to submit such information under the ''Remarks'' section of the reports.

(2) When the NHPRC determines that a recipient's accounting system does not meet the standards in § 1210.21, additional pertinent information to further monitor awards may be obtained upon written notice to the recipient until such time as the system is brought up to standard. The NHPRC, in obtaining this information, shall comply with report clearance requirements of 5 CFR Part 1320.

(3) The NHPRC is encouraged to shade out any line item on any report if not necessary.

(4) The NHPRC may accept the identical information from the recipients in machine readable format or computer printouts or electronic outputs in lieu of prescribed formats.

(5) The NHPRC may provide computer or electronic outputs to recipients when such expedites or contributes to the accuracy of reporting.

### § 1210.53 Retention and access requirements for records.

(a) This section sets forth requirements for record retention and access to records for awards to recipients. The NHPRC will not impose any other record retention or access requirements upon recipients.

(b) Financial records, supporting documents, statistical records, and all other records pertinent to an award shall be retained for a period of three years from the date of submission of the final expenditure report or, for awards that are renewed quarterly or annually, from the date of the submission of the quarterly or annual financial report, as authorized by the NHPRC. The only exceptions are the following.

(1) If any litigation, claim, or audit is started before the expiration of the 3-year period, the records shall be retained until all litigation, claims or audit findings involving the records have been resolved and final action taken.

(2) Records for real property and equipment acquired with NHPRC funds shall be retained for 3 years after final disposition.

(3) When records are transferred to or maintained by the NHPRC, the 3-year retention requirement is not applicable to the recipient.

(4) Indirect cost rate proposals, cost allocations plans, etc. as specified in paragraph (g) of this section.

(c) Copies of original records may be substituted for the original records if authorized by the NHPRC.

(d) The NHPRC shall request transfer of certain records to its custody from recipients when it determines that the records possess long term retention value. However, in order to avoid duplicate recordkeeping, the NHPRC may make arrangements for recipients to retain any records that are continuously needed for joint use.

(e) The NHPRC, the Inspector General, Comptroller General of the United States, or any of their duly authorized representatives, have the right of timely and unrestricted access to any books, documents, papers, or other records of recipients that are pertinent to the awards, in order to make audits, examinations, excerpts, transcripts and copies of such documents. This right also includes timely and reasonable access to a recipient's personnel for the purpose of interview and discussion related to such documents. The rights of access in this paragraph are not limited to the required retention period, but shall last as long as records are retained.

(f) Unless required by statute, the NHPRC will place no restrictions on recipients that limit public access to the records of recipients that are pertinent to an award, except when the NHPRC can demonstrate that such records shall be kept confidential and would have been exempted from disclosure pursuant to the Freedom of Information Act (5 U.S.C. 552) if the records had belonged to the NHPRC.

(g) Indirect cost rate proposals, cost allocations plans, etc. Paragraphs (g)(1) and (g)(2) of this section apply to the following types of documents, and their supporting records: indirect cost rate computations or proposals, cost allocation plans, and any similar accounting computations of the rate at which a particular group of costs is chargeable (such as computer usage chargeback rates or composite fringe benefit rates).

(1) If submitted for negotiation. If the recipient submits to the cognizant Federal agency or the subrecipient submits to the recipient the proposal, plan, or other computation to form the basis for negotiation of the rate, then the 3-year retention period for its supporting records starts on the date of such submission.

(2) If not submitted for negotiation. If the recipient is not required to submit to the NHPRC or the subrecipient is not required to submit to the recipient the proposal, plan, or other computation for negotiation purposes, then the 3-year retention period for the proposal, plan, or other computation and its supporting records starts at the end of the fiscal year (or other accounting period) covered by the proposal, plan, or other computation.

TERMINATION AND ENFORCEMENT

### § 1210.60 Purpose of termination and enforcement.

Sections 1210.61 and 1210.62 set forth uniform suspension, termination and enforcement procedures.

### § 1210.61 Termination.

(a) Awards may be terminated in whole or in part only if paragraphs (1), (2) or (3) of this section apply.

(1) By the NHPRC, if a recipient materially fails to comply with the terms and conditions of an award.

(2) By the NHPRC with the consent of the recipient, in which case the two parties shall agree upon the termination conditions, including the effective date and, in the case of partial termination, the portion to be terminated.

(3) By the recipient upon sending to the NHPRC written notification setting forth the reasons for such termination, the effective date, and, in the case of partial termination, the portion to be terminated. However, if the NHPRC determines in the case of partial termination that the reduced or modified portion of the grant will not accomplish the purposes for which the grant was made, it may terminate the grant in its entirety under either paragraphs (a)(1) or (2) of this section.

(b) If costs are allowed under an award, the responsibilities of the recipient referred to in § 1210.71(a), including those for property management as applicable, shall be considered in the

termination of the award, and provision shall be made for continuing responsibilities of the recipient after termination, as appropriate.

### § 1210.62 Enforcement.

(a) Remedies for noncompliance. If a recipient materially fails to comply with the terms and conditions of an award, whether stated in a Federal statute, regulation, assurance, application, or notice of award, the NHPRC may, in addition to imposing any of the special conditions outlined in § 1210.14, take one or more of the following actions, as appropriate in the circumstances.

(1) Temporarily withhold cash payments pending correction of the deficiency by the recipient or more severe enforcement action by the NHPRC.

(2) Disallow (that is, deny both use of funds and any applicable matching credit for) all or part of the cost of the activity or action not in compliance.

(3) Wholly or partly suspend or terminate the current award.

(4) Withhold further awards for the project or program.

(5) Take other remedies that may be legally available.

(b) Hearings and appeals. In taking an enforcement action, the NHPRC shall provide the recipient an opportunity for hearing, appeal, or other administrative proceeding to which the recipient is entitled under any statute or regulation applicable to the action involved.

(c) Effects of suspension and termination. Costs of a recipient resulting from obligations incurred by the recipient during a suspension or after termination of an award are not allowable unless the NHPRC expressly authorizes them in the notice of suspension or termination or subsequently. Other recipient costs during suspension or after termination which are necessary and not reasonably avoidable are allowable if paragraphs (c)(1) and (2) of this section apply.

(1) The costs result from obligations which were properly incurred by the recipient before the effective date of suspension or termination, are not in anticipation of it, and in the case of a termination, are noncancellable.

(2) The costs would be allowable if the award were not suspended or expired normally at the end of the funding period in which the termination takes effect.

(d) Relationship to debarment and suspension. The enforcement remedies identified in this section, including suspension and termination, do not preclude a recipient from being subject to debarment and suspension under E.O.s 12549 and 12689 and NARA implementing regulations (see § 1210.13).

## Subpart D—After-the-Award Requirements

### § 1210.70 Purpose.

Sections 1210.71 through 1210.73 contain closeout procedures and other procedures for subsequent disallowances and adjustments.

### § 1210.71 Closeout procedures.

(a) Recipients shall submit, within 90 calendar days after the date of completion of the award, all financial, performance, and other reports as required by the terms and conditions of the award. The NHPRC may approve extensions when requested by the recipient.

(b) Unless the NHPRC authorizes an extension, a recipient shall liquidate all obligations incurred under the award not later than 90 calendar days after the funding period or the date of completion as specified in the terms and conditions of the award or in agency implementing instructions.

(c) The NHPRC shall make prompt payments to a recipient for allowable reimbursable costs under the award being closed out.

(d) The recipient shall promptly refund any balances of unobligated cash that the NHPRC has advanced or paid and that is not authorized to be retained by the recipient for use in other projects. OMB Circular A–129 governs unreturned amounts that become delinquent debts.

(e) When authorized by the terms and conditions of the award, the NHPRC shall make a settlement for any upward or downward adjustments to the Federal share of costs after closeout reports are received.

(f) The recipient shall account for any real and personal property acquired with Federal funds or received from the Federal Government in accordance with §§ 1210.31 through 1210.37.

(g) In the event a final audit has not been performed prior to the closeout of an award, the NHPRC shall retain the right to recover an appropriate amount after fully considering the recommendations on disallowed costs resulting from the final audit.

### § 1210.72 Subsequent adjustments and continuing responsibilities.

(a) The closeout of an award does not affect any of the following.

(1) The right of the NHPRC to disallow costs and recover funds on the basis of a later audit or other review.

(2) The obligation of the recipient to return any funds due as a result of later refunds, corrections, or other transactions.

(3) Audit requirements in § 1210.26.

(4) Property management requirements in §§ 1210.31 through 1210.37.

(5) Records retention as required in § 1210.53.

(b) After closeout of an award, a relationship created under an award may be modified or ended in whole or in part with the consent of the NHPRC and the recipient, provided the responsibilities of the recipient referred to in § 1210.73(a), including those for property management as applicable, are considered and provisions made for continuing responsibilities of the recipient, as appropriate.

### § 1210.73 Collection of amounts due.

(a) Any funds paid to a recipient in excess of the amount to which the recipient is finally determined to be entitled under the terms and conditions of the award constitute a debt to the Federal Government. If not paid within a reasonable period after the demand for payment, the NHPRC may reduce the debt by:

(1) Making an administrative offset against other requests for reimbursements;

(2) Withholding advance payments otherwise due to the recipient; or

(3) Taking other action permitted by statute.

(b) Except as otherwise provided by law, the NHPRC shall charge interest on an overdue debt in accordance with 4 CFR Chapter II, ''Federal Claims Collection Standards.''

## APPENDIX A TO PART 1210—CONTRACT PROVISIONS

All contracts, awarded by a recipient including small purchases, shall contain the following provisions as applicable:

1. Equal Employment Opportunity—All contracts shall contain a provision requiring compliance with E.O. 11246, ''Equal Employment Opportunity,'' as amended by E.O. 11375, ''Amending Executive Order 11246 Relating to Equal Employment Opportunity,'' and as supplemented by regulations at 41 CFR part 60, ''Office of Federal Contract Compliance Programs, Equal Employment Opportunity, Department of Labor.''

2. Copeland ''Anti-Kickback'' Act (18 U.S.C. 874 and 40 U.S.C. 276c)—All contracts and subgrants in excess of $2,000 for construction or repair awarded by recipients and subrecipients shall include a provision for compliance with the Copeland ''Anti-Kickback'' Act (18 U.S.C. 874), as supplemented by Department of Labor regulations (29 CFR part 3, ''Contractors and Subcontractors on Public Building or Public Work Financed in Whole or in Part by Loans or Grants from the United States''). The Act provides that each contractor or subrecipient shall be prohibited from inducing, by any means, any person employed in the construction, completion, or repair of public work, to give up any part of the compensation to which he is otherwise entitled. The recipient shall report all suspected or reported violations to the Federal awarding agency.

3. Davis-Bacon Act, as amended (40 U.S.C. 276a to a–7)—When required by Federal program legislation, all construction contracts awarded by the recipients and subrecipients of more than $2,000 shall include a provision for compliance with the Davis-Bacon Act (40 U.S.C. 276a to a–7) and as supplemented by Department of Labor regulations (29 CFR part 5, ''Labor Standards Provisions Applicable to Contracts Governing Federally Financed and Assisted Construction''). Under this Act, contractors shall be required to pay wages to laborers and mechanics at a rate not less than the minimum wages specified in a wage determination made by the Secretary of Labor. In addition, contractors shall be required to pay wages not less than once a week. The recipient shall place a copy of the current prevailing wage determination issued by the Department of Labor in each solicitation and the award of a contract shall be conditioned upon the acceptance of the

wage determination. The recipient shall report all suspected or reported violations to the Federal awarding agency.

4. Contract Work Hours and Safety Standards Act (40 U.S.C. 327–333)—Where applicable, all contracts awarded by recipients in excess of $2,000 for construction contracts and in excess of $2,500 for other contracts that involve the employment of mechanics or laborers shall include a provision for compliance with Sections 102 and 107 of the Contract Work Hours and Safety Standards Act (40 U.S.C. 327–333), as supplemented by Department of Labor regulations (29 CFR part 5). Under Section 102 of the Act, each contractor shall be required to compute the wages of every mechanic and laborer on the basis of a standard work week of 40 hours. Work in excess of the standard work week is permissible provided that the worker is compensated at a rate of not less than 1½ times the basic rate of pay for all hours worked in excess of 40 hours in the work week. Section 107 of the Act is applicable to construction work and provides that no laborer or mechanic shall be required to work in surroundings or under working conditions which are unsanitary, hazardous or dangerous. These requirements do not apply to the purchases of supplies or materials or articles ordinarily available on the open market, or contracts for transportation or transmission of intelligence.

5. Rights to Inventions Made Under a Contract or Agreement—Contracts or agreements for the performance of experimental, developmental, or research work shall provide for the rights of the Federal Government and the recipient in any resulting invention in accordance with 37 CFR part 401, ''Rights to Inventions Made by Nonprofit Organizations and Small Business Firms Under Government Grants, Contracts and Cooperative Agreements,'' and any implementing regulations issued by the awarding agency.

6. Clean Air Act (42 U.S.C. 7401 *et seq.*) and the Federal Water Pollution Control Act (33 U.S.C. 1251 *et seq.*), as amended—Contracts and subgrants of amounts in excess of $100,000 shall contain a provision that requires the recipient to agree to comply with all applicable standards, orders or regulations issued pursuant to the Clean Air Act (42 U.S.C. 7401 *et seq.*) and the Federal Water Pollution Control Act as amended (33 U.S.C. 1251 *et seq.*). Violations shall be reported to the Federal awarding agency and the Regional Office of the Environmental Protection Agency (EPA).

7. Byrd Anti-Lobbying Amendment (31 U.S.C. 1352)—Contractors who apply or bid for an award of $100,000 or more shall file the required certification. Each tier certifies to the tier above that it will not and has not used Federal appropriated funds to pay any person or organization for influencing or attempting to influence an officer or employee of any agency, a member of Congress, officer or employee of Congress, or an employee of a member of Congress in connection with obtaining any Federal contract, grant or any other award covered by 31 U.S.C. 1352. Each tier shall also disclose any lobbying with non-Federal funds that takes place in connection with obtaining any Federal award. Such disclosures are forwarded from tier to tier up to the recipient.

8. Debarment and Suspension (E.O. 12549 and E.O. 12689)—No contract shall be made to parties listed on the General Services Administration's List of Parties Excluded from Federal Procurement or Nonprocurement Programs in accordance with E.O. 12549 and E.O. 12689, ''Debarment and Suspension.'' This list contains the names of parties debarred, suspended, or otherwise excluded by agencies, and contractors declared ineligible under statutory or regulatory authority other than E.O. 12549. Contractors with awards that exceed the small purchase threshold shall provide the required certification regarding its exclusion status and that of its principal employees.

# PART 1211—NONDISCRIMINATION ON THE BASIS OF SEX IN EDUCATION PROGRAMS OR ACTIVITIES RECEIVING FEDERAL FINANCIAL ASSISTANCE

## Subpart A—Introduction

Sec.

1211.100 Purpose and effective date.
1211.105 Definitions.
1211.110 Remedial and affirmative action and self-evaluation.
1211.115 Assurance required.
1211.120 Transfers of property.
1211.125 Effect of other requirements.
1211.130 Effect of employment opportunities.
1211.135 Designation of responsible employee and adoption of grievance procedures.
1211.140 Dissemination of policy.

## Subpart B—Coverage

1211.200 Application.
1211.205 Educational institutions and other entities controlled by religious organizations.
1211.210 Military and merchant marine educational institutions.
1211.215 Membership practices of certain organizations.
1211.220 Admissions.
1211.225 Educational institutions eligible to submit transition plans.
1211.230 Transition plans.

1211.235 Statutory amendments.

**Subpart C—Discrimination on the Basis of Sex in Admission and Recruitment Prohibited**

1211.300 Admission.
1211.305 Preference in admission.
1211.310 Recruitment.

**Subpart D—Discrimination on the Basis of Sex in Education Programs or Activities Prohibited**

1211.400 Education programs or activities.
1211.405 Housing.
1211.410 Comparable facilities.
1211.415 Access to course offerings.
1211.420 Access to schools operated by LEAs.
1211.425 Counseling and use of appraisal and counseling materials.
1211.430 Financial assistance.
1211.435 Employment assistance to students.
1211.440 Health and insurance benefits and services.
1211.445 Marital or parental status.
1211.450 Athletics.
1211.455 Textbooks and curricular material.

**Subpart E—Discrimination on the Basis of Sex in Employment in Education Programs or Activities Prohibited**

1211.500 Employment.
1211.505 Employment criteria.
1211.510 Recruitment.
1211.515 Compensation.
1211.520 Job classification and structure.
1211.525 Fringe benefits.
1211.530 Marital or parental status.
1211.535 Effect of state or local law or other requirements.
1211.540 Advertising.
1211.545 Pre-employment inquiries.
1211.550 Sex as a bona fide occupational qualification.

**Subpart F—Procedures**

1211.600 Notice of covered programs.
1211.605 Compliance information.
1211.610 Conduct of investigations.
1211.615 Procedure for effecting compliance.
1211.620 Hearings.
1211.625 Decisions and notices.
1211.630 Judicial review.
1211.635 Forms and instructions; coordination.

AUTHORITY: 20 U.S.C. 1681, 1682, 1683, 1685, 1686, 1687, 1688.

SOURCE: 65 FR 52865, 52886, Aug. 30, 2000, unless otherwise noted.

## Subpart A—Introduction

### § 1211.100 Purpose and effective date.

The purpose of these Title IX regulations is to effectuate Title IX of the Education Amendments of 1972, as amended (except sections 904 and 906 of those Amendments) (20 U.S.C. 1681, 1682, 1683, 1685, 1686, 1687, 1688), which is designed to eliminate (with certain exceptions) discrimination on the basis of sex in any education program or activity receiving Federal financial assistance, whether or not such program or activity is offered or sponsored by an educational institution as defined in these Title IX regulations. The effective date of these Title IX regulations shall be September 29, 2000.

### § 1211.105 Definitions.

As used in these Title IX regulations, the term:

*Administratively separate unit* means a school, department, or college of an educational institution (other than a local educational agency) admission to which is independent of admission to any other component of such institution.

*Admission* means selection for part-time, full-time, special, associate, transfer, exchange, or any other enrollment, membership, or matriculation in or at an education program or activity operated by a recipient.

*Applicant* means one who submits an application, request, or plan required to be approved by an official of the Federal agency that awards Federal financial assistance, or by a recipient, as a condition to becoming a recipient.

*Designated agency official* means Executive Director, National Historical Publications and Records Commission.

*Educational institution* means a local educational agency (LEA) as defined by 20 U.S.C. 8801(18), a preschool, a private elementary or secondary school, or an applicant or recipient that is an institution of graduate higher education, an institution of undergraduate higher education, an institution of professional education, or an institution of vocational education, as defined in this section.

*Federal financial assistance* means any of the following, when authorized or extended under a law administered by

the Federal agency that awards such assistance:

(1) A grant or loan of Federal financial assistance, including funds made available for:

(i) The acquisition, construction, renovation, restoration, or repair of a building or facility or any portion thereof; and

(ii) Scholarships, loans, grants, wages, or other funds extended to any entity for payment to or on behalf of students admitted to that entity, or extended directly to such students for payment to that entity.

(2) A grant of Federal real or personal property or any interest therein, including surplus property, and the proceeds of the sale or transfer of such property, if the Federal share of the fair market value of the property is not, upon such sale or transfer, properly accounted for to the Federal Government.

(3) Provision of the services of Federal personnel.

(4) Sale or lease of Federal property or any interest therein at nominal consideration, or at consideration reduced for the purpose of assisting the recipient or in recognition of public interest to be served thereby, or permission to use Federal property or any interest therein without consideration.

(5) Any other contract, agreement, or arrangement that has as one of its purposes the provision of assistance to any education program or activity, except a contract of insurance or guaranty.

*Institution of graduate higher education* means an institution that:

(1) Offers academic study beyond the bachelor of arts or bachelor of science degree, whether or not leading to a certificate of any higher degree in the liberal arts and sciences;

(2) Awards any degree in a professional field beyond the first professional degree (regardless of whether the first professional degree in such field is awarded by an institution of undergraduate higher education or professional education); or

(3) Awards no degree and offers no further academic study, but operates ordinarily for the purpose of facilitating research by persons who have received the highest graduate degree in any field of study.

*Institution of professional education* means an institution (except any institution of undergraduate higher education) that offers a program of academic study that leads to a first professional degree in a field for which there is a national specialized accrediting agency recognized by the Secretary of Education.

*Institution of undergraduate higher education* means:

(1) An institution offering at least two but less than four years of college-level study beyond the high school level, leading to a diploma or an associate degree, or wholly or principally creditable toward a baccalaureate degree; or

(2) An institution offering academic study leading to a baccalaureate degree; or

(3) An agency or body that certifies credentials or offers degrees, but that may or may not offer academic study.

*Institution of vocational education* means a school or institution (except an institution of professional or graduate or undergraduate higher education) that has as its primary purpose preparation of students to pursue a technical, skilled, or semiskilled occupation or trade, or to pursue study in a technical field, whether or not the school or institution offers certificates, diplomas, or degrees and whether or not it offers full-time study.

*Recipient* means any State or political subdivision thereof, or any instrumentality of a State or political subdivision thereof, any public or private agency, institution, or organization, or other entity, or any person, to whom Federal financial assistance is extended directly or through another recipient and that operates an education program or activity that receives such assistance, including any subunit, successor, assignee, or transferee thereof.

*Student* means a person who has gained admission.

*Title IX* means Title IX of the Education Amendments of 1972, Public Law 92–318, 86 Stat. 235, 373 (codified as amended at 20 U.S.C. 1681–1688) (except sections 904 and 906 thereof), as amended by section 3 of Public Law 93–568, 88 Stat. 1855, by section 412 of the Education Amendments of 1976, Public Law 94–482, 90 Stat. 2234, and by Section 3 of

Public Law 100–259, 102 Stat. 28, 28–29 (20 U.S.C. 1681, 1682, 1683, 1685, 1686, 1687, 1688).

*Title IX regulations* means the provisions set forth at 36 CFR 1211.100 through 1211.635.

*Transition plan* means a plan subject to the approval of the Secretary of Education pursuant to section 901(a)(2) of the Education Amendments of 1972, 20 U.S.C. 1681(a)(2), under which an educational institution operates in making the transition from being an educational institution that admits only students of one sex to being one that admits students of both sexes without discrimination.

**§ 1211.110 Remedial and affirmative action and self-evaluation.**

(a) *Remedial action*. If the designated agency official finds that a recipient has discriminated against persons on the basis of sex in an education program or activity, such recipient shall take such remedial action as the designated agency official deems necessary to overcome the effects of such discrimination.

(b) *Affirmative action*. In the absence of a finding of discrimination on the basis of sex in an education program or activity, a recipient may take affirmative action consistent with law to overcome the effects of conditions that resulted in limited participation therein by persons of a particular sex. Nothing in these Title IX regulations shall be interpreted to alter any affirmative action obligations that a recipient may have under Executive Order 11246, 3 CFR, 1964–1965 Comp., p. 339; as amended by Executive Order 11375, 3 CFR, 1966–1970 Comp., p. 684; as amended by Executive Order 11478, 3 CFR, 1966–1970 Comp., p. 803; as amended by Executive Order 12086, 3 CFR, 1978 Comp., p. 230; as amended by Executive Order 12107, 3 CFR, 1978 Comp., p. 264.

(c) *Self-evaluation*. Each recipient education institution shall, within one year of September 29, 2000:

(1) Evaluate, in terms of the requirements of these Title IX regulations, its current policies and practices and the effects thereof concerning admission of students, treatment of students, and employment of both academic and nonacademic personnel working in connection with the recipient's education program or activity;

(2) Modify any of these policies and practices that do not or may not meet the requirements of these Title IX regulations; and

(3) Take appropriate remedial steps to eliminate the effects of any discrimination that resulted or may have resulted from adherence to these policies and practices.

(d) *Availability of self-evaluation and related materials*. Recipients shall maintain on file for at least three years following completion of the evaluation required under paragraph (c) of this section, and shall provide to the designated agency official upon request, a description of any modifications made pursuant to paragraph (c)(2) of this section and of any remedial steps taken pursuant to paragraph (c)(3) of this section.

**§ 1211.115 Assurance required.**

(a) *General*. Either at the application stage or the award stage, Federal agencies must ensure that applications for Federal financial assistance or awards of Federal financial assistance contain, be accompanied by, or be covered by a specifically identified assurance from the applicant or recipient, satisfactory to the designated agency official, that each education program or activity operated by the applicant or recipient and to which these Title IX regulations apply will be operated in compliance with these Title IX regulations. An assurance of compliance with these Title IX regulations shall not be satisfactory to the designated agency official if the applicant or recipient to whom such assurance applies fails to commit itself to take whatever remedial action is necessary in accordance with § 1211.110(a) to eliminate existing discrimination on the basis of sex or to eliminate the effects of past discrimination whether occurring prior to or subsequent to the submission to the designated agency official of such assurance.

(b) *Duration of obligation*. (1) In the case of Federal financial assistance extended to provide real property or structures thereon, such assurance shall obligate the recipient or, in the case of a subsequent transfer, the

transferee, for the period during which the real property or structures are used to provide an education program or activity.

(2) In the case of Federal financial assistance extended to provide personal property, such assurance shall obligate the recipient for the period during which it retains ownership or possession of the property.

(3) In all other cases such assurance shall obligate the recipient for the period during which Federal financial assistance is extended.

(c) *Form.* (1) The assurances required by paragraph (a) of this section, which may be included as part of a document that addresses other assurances or obligations, shall include that the applicant or recipient will comply with all applicable Federal statutes relating to nondiscrimination. These include but are not limited to: Title IX of the Education Amendments of 1972, as amended (20 U.S.C. 1681–1683, 1685–1688).

(2) The designated agency official will specify the extent to which such assurances will be required of the applicant's or recipient's subgrantees, contractors, subcontractors, transferees, or successors in interest.

### § 1211.120 Transfers of property.

If a recipient sells or otherwise transfers property financed in whole or in part with Federal financial assistance to a transferee that operates any education program or activity, and the Federal share of the fair market value of the property is not upon such sale or transfer properly accounted for to the Federal Government, both the transferor and the transferee shall be deemed to be recipients, subject to the provisions of §§ 1211.205 through 1211.235(a).

### § 1211.125 Effect of other requirements.

(a) *Effect of other Federal provisions.* The obligations imposed by these Title IX regulations are independent of, and do not alter, obligations not to discriminate on the basis of sex imposed by Executive Order 11246, 3 CFR, 1964–1965 Comp., p. 339; as amended by Executive Order 11375, 3 CFR, 1966–1970 Comp., p. 684; as amended by Executive Order 11478, 3 CFR, 1966–1970 Comp., p. 803; as amended by Executive Order 12087, 3 CFR, 1978 Comp., p. 230; as amended by Executive Order 12107, 3 CFR, 1978 Comp., p. 264; sections 704 and 855 of the Public Health Service Act (42 U.S.C. 295m, 298b-2); Title VII of the Civil Rights Act of 1964 (42 U.S.C. 2000e *et seq.*); the Equal Pay Act of 1963 (29 U.S.C. 206); and any other Act of Congress or Federal regulation.

(b) *Effect of State or local law or other requirements.* The obligation to comply with these Title IX regulations is not obviated or alleviated by any State or local law or other requirement that would render any applicant or student ineligible, or limit the eligibility of any applicant or student, on the basis of sex, to practice any occupation or profession.

(c) *Effect of rules or regulations of private organizations.* The obligation to comply with these Title IX regulations is not obviated or alleviated by any rule or regulation of any organization, club, athletic or other league, or association that would render any applicant or student ineligible to participate or limit the eligibility or participation of any applicant or student, on the basis of sex, in any education program or activity operated by a recipient and that receives Federal financial assistance.

### § 1211.130 Effect of employment opportunities.

The obligation to comply with these Title IX regulations is not obviated or alleviated because employment opportunities in any occupation or profession are or may be more limited for members of one sex than for members of the other sex.

### § 1211.135 Designation of responsible employee and adoption of grievance procedures.

(a) *Designation of responsible employee.* Each recipient shall designate at least one employee to coordinate its efforts to comply with and carry out its responsibilities under these Title IX regulations, including any investigation of any complaint communicated to such recipient alleging its noncompliance with these Title IX regulations or alleging any actions that would be prohibited by these Title IX regulations.

The recipient shall notify all its students and employees of the name, office address, and telephone number of the employee or employees appointed pursuant to this paragraph.

(b) *Complaint procedure of recipient.* A recipient shall adopt and publish grievance procedures providing for prompt and equitable resolution of student and employee complaints alleging any action that would be prohibited by these Title IX regulations.

### § 1211.140 Dissemination of policy.

(a) *Notification of policy.* (1) Each recipient shall implement specific and continuing steps to notify applicants for admission and employment, students and parents of elementary and secondary school students, employees, sources of referral of applicants for admission and employment, and all unions or professional organizations holding collective bargaining or professional agreements with the recipient, that it does not discriminate on the basis of sex in the educational programs or activities that it operates, and that it is required by Title IX and these Title IX regulations not to discriminate in such a manner. Such notification shall contain such information, and be made in such manner, as the designated agency official finds necessary to apprise such persons of the protections against discrimination assured them by Title IX and these Title IX regulations, but shall state at least that the requirement not to discriminate in education programs or activities extends to employment therein, and to admission thereto unless §§ 1211.300 through 1211.310 do not apply to the recipient, and that inquiries concerning the application of Title IX and these Title IX regulations to such recipient may be referred to the employee designated pursuant to § 1211.135, or to the designated agency official.

(2) Each recipient shall make the initial notification required by paragraph (a)(1) of this section within 90 days of September 29, 2000 or of the date these Title IX regulations first apply to such recipient, whichever comes later, which notification shall include publication in:

(i) Newspapers and magazines operated by such recipient or by student, alumnae, or alumni groups for or in connection with such recipient; and

(ii) Memoranda or other written communications distributed to every student and employee of such recipient.

(b) *Publications.* (1) Each recipient shall prominently include a statement of the policy described in paragraph (a) of this section in each announcement, bulletin, catalog, or application form that it makes available to any person of a type, described in paragraph (a) of this section, or which is otherwise used in connection with the recruitment of students or employees.

(2) A recipient shall not use or distribute a publication of the type described in paragraph (b)(1) of this section that suggests, by text or illustration, that such recipient treats applicants, students, or employees differently on the basis of sex except as such treatment is permitted by these Title IX regulations.

(c) *Distribution.* Each recipient shall distribute without discrimination on the basis of sex each publication described in paragraph (b)(1) of this section, and shall apprise each of its admission and employment recruitment representatives of the policy of nondiscrimination described in paragraph (a) of this section, and shall require such representatives to adhere to such policy.

## Subpart B—Coverage

### § 1211.200 Application.

Except as provided in §§ 1211.205 through 1211.235(a), these Title IX regulations apply to every recipient and to each education program or activity operated by such recipient that receives Federal financial assistance.

### § 1211.205 Educational institutions and other entities controlled by religious organizations.

(a) *Exemption.* These Title IX regulations do not apply to any operation of an educational institution or other entity that is controlled by a religious organization to the extent that application of these Title IX regulations would not be consistent with the religious tenets of such organization.

(b) *Exemption claims.* An educational institution or other entity that wishes to claim the exemption set forth in paragraph (a) of this section shall do so by submitting in writing to the designated agency official a statement by the highest-ranking official of the institution, identifying the provisions of these Title IX regulations that conflict with a specific tenet of the religious organization.

### § 1211.210 Military and merchant marine educational institutions.

These Title IX regulations do not apply to an educational institution whose primary purpose is the training of individuals for a military service of the United States or for the merchant marine.

### § 1211.215 Membership practices of certain organizations.

(a) *Social fraternities and sororities.* These Title IX regulations do not apply to the membership practices of social fraternities and sororities that are exempt from taxation under section 501(a) of the Internal Revenue Code of 1954, 26 U.S.C. 501(a), the active membership of which consists primarily of students in attendance at institutions of higher education.

(b) *YMCA, YWCA, Girl Scouts, Boy Scouts, and Camp Fire Girls.* These Title IX regulations do not apply to the membership practices of the Young Men's Christian Association (YMCA), the Young Women's Christian Association (YWCA), the Girl Scouts, the Boy Scouts, and Camp Fire Girls.

(c) *Voluntary youth service organizations.* These Title IX regulations do not apply to the membership practices of a voluntary youth service organization that is exempt from taxation under section 501(a) of the Internal Revenue Code of 1954, 26 U.S.C. 501(a), and the membership of which has been traditionally limited to members of one sex and principally to persons of less than nineteen years of age.

### § 1211.220 Admissions.

(a) Admissions to educational institutions prior to June 24, 1973, are not covered by these Title IX regulations.

(b) *Administratively separate units.* For the purposes only of this section, §§ 1211.225 and 1211.230, and §§ 1211.300 through 1211.310, each administratively separate unit shall be deemed to be an educational institution.

(c) *Application of §§ 1211.300 through 1211.310.* Except as provided in paragraphs (d) and (e) of this section, §§ 1211.300 through 1211.310 apply to each recipient. A recipient to which §§ 1211.300 through 1211.310 apply shall not discriminate on the basis of sex in admission or recruitment in violation of §§ 1211.300 through 1211.310.

(d) *Educational institutions.* Except as provided in paragraph (e) of this section as to recipients that are educational institutions, §§ 1211.300 through 1211.310 apply only to institutions of vocational education, professional education, graduate higher education, and public institutions of undergraduate higher education.

(e) *Public institutions of undergraduate higher education.* §§ 1211.300 through 1211.310 do not apply to any public institution of undergraduate higher education that traditionally and continually from its establishment has had a policy of admitting students of only one sex.

### § 1211.225 Educational institutions eligible to submit transition plans.

(a) *Application.* This section applies to each educational institution to which §§ 1211.300 through 1211.310 apply that:

(1) Admitted students of only one sex as regular students as of June 23, 1972; or

(2) Admitted students of only one sex as regular students as of June 23, 1965, but thereafter admitted, as regular students, students of the sex not admitted prior to June 23, 1965.

(b) *Provision for transition plans.* An educational institution to which this section applies shall not discriminate on the basis of sex in admission or recruitment in violation of §§ 1211.300 through 1211.310.

### § 1211.230 Transition plans.

(a) *Submission of plans.* An institution to which § 1211.225 applies and that is composed of more than one administratively separate unit may submit either a single transition plan applicable to

all such units, or a separate transition plan applicable to each such unit.

(b) *Content of plans.* In order to be approved by the Secretary of Education, a transition plan shall:

(1) State the name, address, and Federal Interagency Committee on Education Code of the educational institution submitting such plan, the administratively separate units to which the plan is applicable, and the name, address, and telephone number of the person to whom questions concerning the plan may be addressed. The person who submits the plan shall be the chief administrator or president of the institution, or another individual legally authorized to bind the institution to all actions set forth in the plan.

(2) State whether the educational institution or administratively separate unit admits students of both sexes as regular students and, if so, when it began to do so.

(3) Identify and describe with respect to the educational institution or administratively separate unit any obstacles to admitting students without discrimination on the basis of sex.

(4) Describe in detail the steps necessary to eliminate as soon as practicable each obstacle so identified and indicate the schedule for taking these steps and the individual directly responsible for their implementation.

(5) Include estimates of the number of students, by sex, expected to apply for, be admitted to, and enter each class during the period covered by the plan.

(c) *Nondiscrimination.* No policy or practice of a recipient to which § 1211.225 applies shall result in treatment of applicants to or students of such recipient in violation of §§ 1211.300 through 1211.310 unless such treatment is necessitated by an obstacle identified in paragraph (b)(3) of this section and a schedule for eliminating that obstacle has been provided as required by paragraph (b)(4) of this section.

(d) *Effects of past exclusion.* To overcome the effects of past exclusion of students on the basis of sex, each educational institution to which § 1211.225 applies shall include in its transition plan, and shall implement, specific steps designed to encourage individuals of the previously excluded sex to apply for admission to such institution. Such steps shall include instituting recruitment programs that emphasize the institution's commitment to enrolling students of the sex previously excluded.

**§ 1211.235 Statutory amendments.**

(a) This section, which applies to all provisions of these Title IX regulations, addresses statutory amendments to Title IX.

(b) These Title IX regulations shall not apply to or preclude:

(1) Any program or activity of the American Legion undertaken in connection with the organization or operation of any Boys State conference, Boys Nation conference, Girls State conference, or Girls Nation conference;

(2) Any program or activity of a secondary school or educational institution specifically for:

(i) The promotion of any Boys State conference, Boys Nation conference, Girls State conference, or Girls Nation conference; or

(ii) The selection of students to attend any such conference;

(3) Father-son or mother-daughter activities at an educational institution or in an education program or activity, but if such activities are provided for students of one sex, opportunities for reasonably comparable activities shall be provided to students of the other sex;

(4) Any scholarship or other financial assistance awarded by an institution of higher education to an individual because such individual has received such award in a single-sex pageant based upon a combination of factors related to the individual's personal appearance, poise, and talent. The pageant, however, must comply with other nondiscrimination provisions of Federal law.

(c) *Program or activity* or *program* means:

(1) All of the operations of any entity described in paragraphs (c)(1)(i) through (iv) of this section, any part of which is extended Federal financial assistance:

(i)(A) A department, agency, special purpose district, or other instrumentality of a State or of a local government; or

(B) The entity of such State or local government that distributes such assistance and each such department or agency (and each other State or local government entity) to which the assistance is extended, in the case of assistance to a State or local government;

(ii)(A) A college, university, or other postsecondary institution, or a public system of higher education; or

(B) A local educational agency (as defined in section 8801 of title 20), system of vocational education, or other school system;

(iii)(A) An entire corporation, partnership, or other private organization, or an entire sole proprietorship—

(*1*) If assistance is extended to such corporation, partnership, private organization, or sole proprietorship as a whole; or

(*2*) Which is principally engaged in the business of providing education, health care, housing, social services, or parks and recreation; or

(B) The entire plant or other comparable, geographically separate facility to which Federal financial assistance is extended, in the case of any other corporation, partnership, private organization, or sole proprietorship; or

(iv) Any other entity that is established by two or more of the entities described in paragraphs (c)(1)(i), (ii), or (iii) of this section.

(2)(i) *Program or activity* does not include any operation of an entity that is controlled by a religious organization if the application of 20 U.S.C. 1681 to such operation would not be consistent with the religious tenets of such organization.

(ii) For example, all of the operations of a college, university, or other postsecondary institution, including but not limited to traditional educational operations, faculty and student housing, campus shuttle bus service, campus restaurants, the bookstore, and other commercial activities are part of a ''program or activity'' subject to these Title IX regulations if the college, university, or other institution receives Federal financial assistance.

(d)(1) Nothing in these Title IX regulations shall be construed to require or prohibit any person, or public or private entity, to provide or pay for any benefit or service, including the use of facilities, related to an abortion. Medical procedures, benefits, services, and the use of facilities, necessary to save the life of a pregnant woman or to address complications related to an abortion are not subject to this section.

(2) Nothing in this section shall be construed to permit a penalty to be imposed on any person or individual because such person or individual is seeking or has received any benefit or service related to a legal abortion. Accordingly, subject to paragraph (d)(1) of this section, no person shall be excluded from participation in, be denied the benefits of, or be subjected to discrimination under any academic, extracurricular, research, occupational training, employment, or other educational program or activity operated by a recipient that receives Federal financial assistance because such individual has sought or received, or is seeking, a legal abortion, or any benefit or service related to a legal abortion.

## Subpart C—Discrimination on the Basis of Sex in Admission and Recruitment Prohibited

### § 1211.300 Admission.

(a) *General.* No person shall, on the basis of sex, be denied admission, or be subjected to discrimination in admission, by any recipient to which §§ 1211.300 through §§ 1211.310 apply, except as provided in § 1211.225 and § 1211.230.

(b) *Specific prohibitions.* (1) In determining whether a person satisfies any policy or criterion for admission, or in making any offer of admission, a recipient to which §§ 1211.300 through 1211.310 apply shall not:

(i) Give preference to one person over another on the basis of sex, by ranking applicants separately on such basis, or otherwise;

(ii) Apply numerical limitations upon the number or proportion of persons of either sex who may be admitted; or

(iii) Otherwise treat one individual differently from another on the basis of sex.

(2) A recipient shall not administer or operate any test or other criterion

for admission that has a disproportionately adverse effect on persons on the basis of sex unless the use of such test or criterion is shown to predict validly success in the education program or activity in question and alternative tests or criteria that do not have such a disproportionately adverse effect are shown to be unavailable.

(c) *Prohibitions relating to marital or parental status.* In determining whether a person satisfies any policy or criterion for admission, or in making any offer of admission, a recipient to which §§ 1211.300 through 1211.310 apply:

(1) Shall not apply any rule concerning the actual or potential parental, family, or marital status of a student or applicant that treats persons differently on the basis of sex;

(2) Shall not discriminate against or exclude any person on the basis of pregnancy, childbirth, termination of pregnancy, or recovery therefrom, or establish or follow any rule or practice that so discriminates or excludes;

(3) Subject to § 1211.235(d), shall treat disabilities related to pregnancy, childbirth, termination of pregnancy, or recovery therefrom in the same manner and under the same policies as any other temporary disability or physical condition; and

(4) Shall not make pre-admission inquiry as to the marital status of an applicant for admission, including whether such applicant is ''Miss'' or ''Mrs.'' A recipient may make pre-admission inquiry as to the sex of an applicant for admission, but only if such inquiry is made equally of such applicants of both sexes and if the results of such inquiry are not used in connection with discrimination prohibited by these Title IX regulations.

### § 1211.305 Preference in admission.

A recipient to which §§ 1211.300 through 1211.310 apply shall not give preference to applicants for admission, on the basis of attendance at any educational institution or other school or entity that admits as students only or predominantly members of one sex, if the giving of such preference has the effect of discriminating on the basis of sex in violation of §§ 1211.300 through 1211.310.

### § 1211.310 Recruitment.

(a) *Nondiscriminatory recruitment.* A recipient to which §§ 1211.300 through 1211.310 apply shall not discriminate on the basis of sex in the recruitment and admission of students. A recipient may be required to undertake additional recruitment efforts for one sex as remedial action pursuant to § 1211.110(a), and may choose to undertake such efforts as affirmative action pursuant to § 1211.110(b).

(b) *Recruitment at certain institutions.* A recipient to which §§ 1211.300 through 1211.310 apply shall not recruit primarily or exclusively at educational institutions, schools, or entities that admit as students only or predominantly members of one sex, if such actions have the effect of discriminating on the basis of sex in violation of §§ 1211.300 through 1211.310.

## Subpart D—Discrimination on the Basis of Sex in Education Programs or Activities Prohibited

### § 1211.400 Education programs or activities.

(a) *General.* Except as provided elsewhere in these Title IX regulations, no person shall, on the basis of sex, be excluded from participation in, be denied the benefits of, or be subjected to discrimination under any academic, extracurricular, research, occupational training, or other education program or activity operated by a recipient that receives Federal financial assistance. Sections 1211.400 through 1211.455 do not apply to actions of a recipient in connection with admission of its students to an education program or activity of a recipient to which §§ 1211.300 through 1211.310 do not apply, or an entity, not a recipient, to which §§ 1211.300 through 1211.310 would not apply if the entity were a recipient.

(b) *Specific prohibitions.* Except as provided in §§ 1211.400 through 1211.455, in providing any aid, benefit, or service to a student, a recipient shall not, on the basis of sex:

(1) Treat one person differently from another in determining whether such person satisfies any requirement or condition for the provision of such aid, benefit, or service;

(2) Provide different aid, benefits, or services or provide aid, benefits, or services in a different manner;

(3) Deny any person any such aid, benefit, or service;

(4) Subject any person to separate or different rules of behavior, sanctions, or other treatment;

(5) Apply any rule concerning the domicile or residence of a student or applicant, including eligibility for in-state fees and tuition;

(6) Aid or perpetuate discrimination against any person by providing significant assistance to any agency, organization, or person that discriminates on the basis of sex in providing any aid, benefit, or service to students or employees;

(7) Otherwise limit any person in the enjoyment of any right, privilege, advantage, or opportunity.

(c) *Assistance administered by a recipient educational institution to study at a foreign institution.* A recipient educational institution may administer or assist in the administration of scholarships, fellowships, or other awards established by foreign or domestic wills, trusts, or similar legal instruments, or by acts of foreign governments and restricted to members of one sex, that are designed to provide opportunities to study abroad, and that are awarded to students who are already matriculating at or who are graduates of the recipient institution; *Provided*, that a recipient educational institution that administers or assists in the administration of such scholarships, fellowships, or other awards that are restricted to members of one sex provides, or otherwise makes available, reasonable opportunities for similar studies for members of the other sex. Such opportunities may be derived from either domestic or foreign sources.

(d) *Aids, benefits or services not provided by recipient.* (1) This paragraph (d) applies to any recipient that requires participation by any applicant, student, or employee in any education program or activity not operated wholly by such recipient, or that facilitates, permits, or considers such participation as part of or equivalent to an education program or activity operated by such recipient, including participation in educational consortia and cooperative employment and student-teaching assignments.

(2) Such recipient:

(i) Shall develop and implement a procedure designed to assure itself that the operator or sponsor of such other education program or activity takes no action affecting any applicant, student, or employee of such recipient that these Title IX regulations would prohibit such recipient from taking; and

(ii) Shall not facilitate, require, permit, or consider such participation if such action occurs.

**§ 1211.405 Housing.**

(a) *Generally.* A recipient shall not, on the basis of sex, apply different rules or regulations, impose different fees or requirements, or offer different services or benefits related to housing, except as provided in this section (including housing provided only to married students).

(b) *Housing provided by recipient.* (1) A recipient may provide separate housing on the basis of sex.

(2) Housing provided by a recipient to students of one sex, when compared to that provided to students of the other sex, shall be as a whole:

(i) Proportionate in quantity to the number of students of that sex applying for such housing; and

(ii) Comparable in quality and cost to the student.

(c) *Other housing.* (1) A recipient shall not, on the basis of sex, administer different policies or practices concerning occupancy by its students of housing other than that provided by such recipient.

(2)(i) A recipient which, through solicitation, listing, approval of housing, or otherwise, assists any agency, organization, or person in making housing available to any of its students, shall take such reasonable action as may be necessary to assure itself that such housing as is provided to students of one sex, when compared to that provided to students of the other sex, is as a whole:

(A) Proportionate in quantity; and

(B) Comparable in quality and cost to the student.

(ii) A recipient may render such assistance to any agency, organization,

or person that provides all or part of such housing to students of only one sex.

### § 1211.410 Comparable facilities.

A recipient may provide separate toilet, locker room, and shower facilities on the basis of sex, but such facilities provided for students of one sex shall be comparable to such facilities provided for students of the other sex.

### § 1211.415 Access to course offerings.

(a) A recipient shall not provide any course or otherwise carry out any of its education program or activity separately on the basis of sex, or require or refuse participation therein by any of its students on such basis, including health, physical education, industrial, business, vocational, technical, home economics, music, and adult education courses.

(b)(1) With respect to classes and activities in physical education at the elementary school level, the recipient shall comply fully with this section as expeditiously as possible but in no event later than one year from September 29, 2000. With respect to physical education classes and activities at the secondary and post-secondary levels, the recipient shall comply fully with this section as expeditiously as possible but in no event later than three years from September 29, 2000.

(2) This section does not prohibit grouping of students in physical education classes and activities by ability as assessed by objective standards of individual performance developed and applied without regard to sex.

(3) This section does not prohibit separation of students by sex within physical education classes or activities during participation in wrestling, boxing, rugby, ice hockey, football, basketball, and other sports the purpose or major activity of which involves bodily contact.

(4) Where use of a single standard of measuring skill or progress in a physical education class has an adverse effect on members of one sex, the recipient shall use appropriate standards that do not have such effect.

(5) Portions of classes in elementary and secondary schools, or portions of education programs or activities, that deal exclusively with human sexuality may be conducted in separate sessions for boys and girls.

(6) Recipients may make requirements based on vocal range or quality that may result in a chorus or choruses of one or predominantly one sex.

### § 1211.420 Access to schools operated by LEAs.

A recipient that is a local educational agency shall not, on the basis of sex, exclude any person from admission to:

(a) Any institution of vocational education operated by such recipient; or

(b) Any other school or educational unit operated by such recipient, unless such recipient otherwise makes available to such person, pursuant to the same policies and criteria of admission, courses, services, and facilities comparable to each course, service, and facility offered in or through such schools.

### § 1211.425 Counseling and use of appraisal and counseling materials.

(a) *Counseling.* A recipient shall not discriminate against any person on the basis of sex in the counseling or guidance of students or applicants for admission.

(b) *Use of appraisal and counseling materials.* A recipient that uses testing or other materials for appraising or counseling students shall not use different materials for students on the basis of their sex or use materials that permit or require different treatment of students on such basis unless such different materials cover the same occupations and interest areas and the use of such different materials is shown to be essential to eliminate sex bias. Recipients shall develop and use internal procedures for ensuring that such materials do not discriminate on the basis of sex. Where the use of a counseling test or other instrument results in a substantially disproportionate number of members of one sex in any particular course of study or classification, the recipient shall take such action as is necessary to assure itself that such disproportion is not the result of discrimination in the instrument or its application.

(c) *Disproportion in classes.* Where a recipient finds that a particular class contains a substantially disproportionate number of individuals of one sex, the recipient shall take such action as is necessary to assure itself that such disproportion is not the result of discrimination on the basis of sex in counseling or appraisal materials or by counselors.

**§ 1211.430 Financial assistance.**

(a) *General.* Except as provided in paragraphs (b) and (c) of this section, in providing financial assistance to any of its students, a recipient shall not:

(1) On the basis of sex, provide different amounts or types of such assistance, limit eligibility for such assistance that is of any particular type or source, apply different criteria, or otherwise discriminate;

(2) Through solicitation, listing, approval, provision of facilities, or other services, assist any foundation, trust, agency, organization, or person that provides assistance to any of such recipient's students in a manner that discriminates on the basis of sex; or

(3) Apply any rule or assist in application of any rule concerning eligibility for such assistance that treats persons of one sex differently from persons of the other sex with regard to marital or parental status.

(b) *Financial aid established by certain legal instruments.* (1) A recipient may administer or assist in the administration of scholarships, fellowships, or other forms of financial assistance established pursuant to domestic or foreign wills, trusts, bequests, or similar legal instruments or by acts of a foreign government that require that awards be made to members of a particular sex specified therein; *Provided,* that the overall effect of the award of such sex-restricted scholarships, fellowships, and other forms of financial assistance does not discriminate on the basis of sex.

(2) To ensure nondiscriminatory awards of assistance as required in paragraph (b)(1) of this section, recipients shall develop and use procedures under which:

(i) Students are selected for award of financial assistance on the basis of nondiscriminatory criteria and not on the basis of availability of funds restricted to members of a particular sex;

(ii) An appropriate sex-restricted scholarship, fellowship, or other form of financial assistance is allocated to each student selected under paragraph (b)(2)(i) of this section; and

(iii) No student is denied the award for which he or she was selected under paragraph (b)(2)(i) of this section because of the absence of a scholarship, fellowship, or other form of financial assistance designated for a member of that student's sex.

(c) *Athletic scholarships.* (1) To the extent that a recipient awards athletic scholarships or grants-in-aid, it must provide reasonable opportunities for such awards for members of each sex in proportion to the number of students of each sex participating in interscholastic or intercollegiate athletics.

(2) A recipient may provide separate athletic scholarships or grants-in-aid for members of each sex as part of separate athletic teams for members of each sex to the extent consistent with this paragraph (c) and § 1211.450.

**§ 1211.435 Employment assistance to students.**

(a) *Assistance by recipient in making available outside employment.* A recipient that assists any agency, organization, or person in making employment available to any of its students:

(1) Shall assure itself that such employment is made available without discrimination on the basis of sex; and

(2) Shall not render such services to any agency, organization, or person that discriminates on the basis of sex in its employment practices.

(b) *Employment of students by recipients.* A recipient that employs any of its students shall not do so in a manner that violates §§ 1211.500 through 1211.550.

**§ 1211.440 Health and insurance benefits and services.**

Subject to § 1211.235(d), in providing a medical, hospital, accident, or life insurance benefit, service, policy, or plan to any of its students, a recipient shall not discriminate on the basis of sex, or provide such benefit, service, policy, or plan in a manner that would violate §§ 1211.500 through 1211.550 if it were

provided to employees of the recipient. This section shall not prohibit a recipient from providing any benefit or service that may be used by a different proportion of students of one sex than of the other, including family planning services. However, any recipient that provides full coverage health service shall provide gynecological care.

**§ 1211.445 Marital or parental status.**

(a) *Status generally*. A recipient shall not apply any rule concerning a student's actual or potential parental, family, or marital status that treats students differently on the basis of sex.

(b) *Pregnancy and related conditions*. (1) A recipient shall not discriminate against any student, or exclude any student from its education program or activity, including any class or extracurricular activity, on the basis of such student's pregnancy, childbirth, false pregnancy, termination of pregnancy, or recovery therefrom, unless the student requests voluntarily to participate in a separate portion of the program or activity of the recipient.

(2) A recipient may require such a student to obtain the certification of a physician that the student is physically and emotionally able to continue participation as long as such a certification is required of all students for other physical or emotional conditions requiring the attention of a physician.

(3) A recipient that operates a portion of its education program or activity separately for pregnant students, admittance to which is completely voluntary on the part of the student as provided in paragraph (b)(1) of this section, shall ensure that the separate portion is comparable to that offered to non-pregnant students.

(4) Subject to § 1211.235(d), a recipient shall treat pregnancy, childbirth, false pregnancy, termination of pregnancy and recovery therefrom in the same manner and under the same policies as any other temporary disability with respect to any medical or hospital benefit, service, plan, or policy that such recipient administers, operates, offers, or participates in with respect to students admitted to the recipient's educational program or activity.

(5) In the case of a recipient that does not maintain a leave policy for its students, or in the case of a student who does not otherwise qualify for leave under such a policy, a recipient shall treat pregnancy, childbirth, false pregnancy, termination of pregnancy, and recovery therefrom as a justification for a leave of absence for as long a period of time as is deemed medically necessary by the student's physician, at the conclusion of which the student shall be reinstated to the status that she held when the leave began.

**§ 1211.450 Athletics.**

(a) *General*. No person shall, on the basis of sex, be excluded from participation in, be denied the benefits of, be treated differently from another person, or otherwise be discriminated against in any interscholastic, intercollegiate, club, or intramural athletics offered by a recipient, and no recipient shall provide any such athletics separately on such basis.

(b) *Separate teams*. Notwithstanding the requirements of paragraph (a) of this section, a recipient may operate or sponsor separate teams for members of each sex where selection for such teams is based upon competitive skill or the activity involved is a contact sport. However, where a recipient operates or sponsors a team in a particular sport for members of one sex but operates or sponsors no such team for members of the other sex, and athletic opportunities for members of that sex have previously been limited, members of the excluded sex must be allowed to try out for the team offered unless the sport involved is a contact sport. For the purposes of these Title IX regulations, contact sports include boxing, wrestling, rugby, ice hockey, football, basketball, and other sports the purpose or major activity of which involves bodily contact.

(c) *Equal opportunity*. (1) A recipient that operates or sponsors interscholastic, intercollegiate, club, or intramural athletics shall provide equal athletic opportunity for members of both sexes. In determining whether equal opportunities are available, the designated agency official will consider, among other factors:

(i) Whether the selection of sports and levels of competition effectively

accommodate the interests and abilities of members of both sexes;

(ii) The provision of equipment and supplies;

(iii) Scheduling of games and practice time;

(iv) Travel and per diem allowance;

(v) Opportunity to receive coaching and academic tutoring;

(vi) Assignment and compensation of coaches and tutors;

(vii) Provision of locker rooms, practice, and competitive facilities;

(viii) Provision of medical and training facilities and services;

(ix) Provision of housing and dining facilities and services;

(x) Publicity.

(2) For purposes of paragraph (c)(1) of this section, unequal aggregate expenditures for members of each sex or unequal expenditures for male and female teams if a recipient operates or sponsors separate teams will not constitute noncompliance with this section, but the designated agency official may consider the failure to provide necessary funds for teams for one sex in assessing equality of opportunity for members of each sex.

(d) *Adjustment period*. A recipient that operates or sponsors interscholastic, intercollegiate, club, or intramural athletics at the elementary school level shall comply fully with this section as expeditiously as possible but in no event later than one year from September 29, 2000. A recipient that operates or sponsors interscholastic, intercollegiate, club, or intramural athletics at the secondary or postsecondary school level shall comply fully with this section as expeditiously as possible but in no event later than three years from September 29, 2000.

### § 1211.455 Textbooks and curricular material.

Nothing in these Title IX regulations shall be interpreted as requiring or prohibiting or abridging in any way the use of particular textbooks or curricular materials.

## Subpart E—Discrimination on the Basis of Sex in Employment in Education Programs or Activities Prohibited

### § 1211.500 Employment.

(a) *General*. (1) No person shall, on the basis of sex, be excluded from participation in, be denied the benefits of, or be subjected to discrimination in employment, or recruitment, consideration, or selection therefor, whether full-time or part-time, under any education program or activity operated by a recipient that receives Federal financial assistance.

(2) A recipient shall make all employment decisions in any education program or activity operated by such recipient in a nondiscriminatory manner and shall not limit, segregate, or classify applicants or employees in any way that could adversely affect any applicant's or employee's employment opportunities or status because of sex.

(3) A recipient shall not enter into any contractual or other relationship which directly or indirectly has the effect of subjecting employees or students to discrimination prohibited by §§ 1211.500 through 1211.550, including relationships with employment and referral agencies, with labor unions, and with organizations providing or administering fringe benefits to employees of the recipient.

(4) A recipient shall not grant preferences to applicants for employment on the basis of attendance at any educational institution or entity that admits as students only or predominantly members of one sex, if the giving of such preferences has the effect of discriminating on the basis of sex in violation of these Title IX regulations.

(b) *Application*. The provisions of §§ 1211.500 through 1211.550 apply to:

(1) Recruitment, advertising, and the process of application for employment;

(2) Hiring, upgrading, promotion, consideration for and award of tenure, demotion, transfer, layoff, termination, application of nepotism policies, right of return from layoff, and rehiring;

(3) Rates of pay or any other form of compensation, and changes in compensation;

(4) Job assignments, classifications, and structure, including position descriptions, lines of progression, and seniority lists;

(5) The terms of any collective bargaining agreement;

(6) Granting and return from leaves of absence, leave for pregnancy, childbirth, false pregnancy, termination of pregnancy, leave for persons of either sex to care for children or dependents, or any other leave;

(7) Fringe benefits available by virtue of employment, whether or not administered by the recipient;

(8) Selection and financial support for training, including apprenticeship, professional meetings, conferences, and other related activities, selection for tuition assistance, selection for sabbaticals and leaves of absence to pursue training;

(9) Employer-sponsored activities, including social or recreational programs; and

(10) Any other term, condition, or privilege of employment.

### § 1211.505 Employment criteria.

A recipient shall not administer or operate any test or other criterion for any employment opportunity that has a disproportionately adverse effect on persons on the basis of sex unless:

(a) Use of such test or other criterion is shown to predict validly successful performance in the position in question; and

(b) Alternative tests or criteria for such purpose, which do not have such disproportionately adverse effect, are shown to be unavailable.

### § 1211.510 Recruitment.

(a) *Nondiscriminatory recruitment and hiring.* A recipient shall not discriminate on the basis of sex in the recruitment and hiring of employees. Where a recipient has been found to be presently discriminating on the basis of sex in the recruitment or hiring of employees, or has been found to have so discriminated in the past, the recipient shall recruit members of the sex so discriminated against so as to overcome the effects of such past or present discrimination.

(b) *Recruitment patterns.* A recipient shall not recruit primarily or exclusively at entities that furnish as applicants only or predominantly members of one sex if such actions have the effect of discriminating on the basis of sex in violation of §§ 1211.500 through 1211.550.

### § 1211.515 Compensation.

A recipient shall not make or enforce any policy or practice that, on the basis of sex:

(a) Makes distinctions in rates of pay or other compensation;

(b) Results in the payment of wages to employees of one sex at a rate less than that paid to employees of the opposite sex for equal work on jobs the performance of which requires equal skill, effort, and responsibility, and that are performed under similar working conditions.

### § 1211.520 Job classification and structure.

A recipient shall not:

(a) Classify a job as being for males or for females;

(b) Maintain or establish separate lines of progression, seniority lists, career ladders, or tenure systems based on sex; or

(c) Maintain or establish separate lines of progression, seniority systems, career ladders, or tenure systems for similar jobs, position descriptions, or job requirements that classify persons on the basis of sex, unless sex is a bona fide occupational qualification for the positions in question as set forth in § 1211.550.

### § 1211.525 Fringe benefits.

(a) *''Fringe benefits'' defined.* For purposes of these Title IX regulations, *fringe benefits* means: Any medical, hospital, accident, life insurance, or retirement benefit, service, policy or plan, any profit-sharing or bonus plan, leave, and any other benefit or service of employment not subject to the provision of § 1211.515.

(b) *Prohibitions.* A recipient shall not:

(1) Discriminate on the basis of sex with regard to making fringe benefits available to employees or make fringe benefits available to spouses, families, or dependents of employees differently upon the basis of the employee's sex;

(2) Administer, operate, offer, or participate in a fringe benefit plan that does not provide for equal periodic benefits for members of each sex and for equal contributions to the plan by such recipient for members of each sex; or

(3) Administer, operate, offer, or participate in a pension or retirement plan that establishes different optional or compulsory retirement ages based on sex or that otherwise discriminates in benefits on the basis of sex.

### § 1211.530 Marital or parental status.

(a) *General*. A recipient shall not apply any policy or take any employment action:

(1) Concerning the potential marital, parental, or family status of an employee or applicant for employment that treats persons differently on the basis of sex; or

(2) Which is based upon whether an employee or applicant for employment is the head of household or principal wage earner in such employee's or applicant's family unit.

(b) *Pregnancy*. A recipient shall not discriminate against or exclude from employment any employee or applicant for employment on the basis of pregnancy, childbirth, false pregnancy, termination of pregnancy, or recovery therefrom.

(c) *Pregnancy as a temporary disability*. Subject to § 1211.235(d), a recipient shall treat pregnancy, childbirth, false pregnancy, termination of pregnancy, recovery therefrom, and any temporary disability resulting therefrom as any other temporary disability for all job-related purposes, including commencement, duration, and extensions of leave, payment of disability income, accrual of seniority and any other benefit or service, and reinstatement, and under any fringe benefit offered to employees by virtue of employment.

(d) *Pregnancy leave*. In the case of a recipient that does not maintain a leave policy for its employees, or in the case of an employee with insufficient leave or accrued employment time to qualify for leave under such a policy, a recipient shall treat pregnancy, childbirth, false pregnancy, termination of pregnancy, and recovery therefrom as a justification for a leave of absence without pay for a reasonable period of time, at the conclusion of which the employee shall be reinstated to the status that she held when the leave began or to a comparable position, without decrease in rate of compensation or loss of promotional opportunities, or any other right or privilege of employment.

### § 1211.535 Effect of state or local law or other requirements.

(a) *Prohibitory requirements*. The obligation to comply with §§ 1211.500 through 1211.550 is not obviated or alleviated by the existence of any State or local law or other requirement that imposes prohibitions or limits upon employment of members of one sex that are not imposed upon members of the other sex.

(b) *Benefits*. A recipient that provides any compensation, service, or benefit to members of one sex pursuant to a State or local law or other requirement shall provide the same compensation, service, or benefit to members of the other sex.

### § 1211.540 Advertising.

A recipient shall not in any advertising related to employment indicate preference, limitation, specification, or discrimination based on sex unless sex is a bona fide occupational qualification for the particular job in question.

### § 1211.545 Pre-employment inquiries.

(a) *Marital status*. A recipient shall not make pre-employment inquiry as to the marital status of an applicant for employment, including whether such applicant is ''Miss'' or ''Mrs.''

(b) *Sex*. A recipient may make pre-employment inquiry as to the sex of an applicant for employment, but only if such inquiry is made equally of such applicants of both sexes and if the results of such inquiry are not used in connection with discrimination prohibited by these Title IX regulations.

### § 1211.550 Sex as a bona fide occupational qualification.

A recipient may take action otherwise prohibited by §§ 1211.500 through 1211.550 provided it is shown that sex is a bona fide occupational qualification for that action, such that consideration of sex with regard to such action

is essential to successful operation of the employment function concerned. A recipient shall not take action pursuant to this section that is based upon alleged comparative employment characteristics or stereotyped characterizations of one or the other sex, or upon preference based on sex of the recipient, employees, students, or other persons, but nothing contained in this section shall prevent a recipient from considering an employee's sex in relation to employment in a locker room or toilet facility used only by members of one sex.

## Subpart F—Procedures

### § 1211.600 Notice of covered programs.

Within 60 days of September 29, 2000, each Federal agency that awards Federal financial assistance shall publish in the FEDERAL REGISTER a notice of the programs covered by these Title IX regulations. Each such Federal agency shall periodically republish the notice of covered programs to reflect changes in covered programs. Copies of this notice also shall be made available upon request to the Federal agency's office that enforces Title IX.

### § 1211.605 Compliance information.

(a) *Cooperation and assistance.* The designated agency official shall to the fullest extent practicable seek the cooperation of recipients in obtaining compliance with these Title IX regulations and shall provide assistance and guidance to recipients to help them comply voluntarily with these Title IX regulations.

(b) *Compliance reports.* Each recipient shall keep such records and submit to the designated agency official (or designee) timely, complete, and accurate compliance reports at such times, and in such form and containing such information, as the designated agency official (or designee) may determine to be necessary to enable the official to ascertain whether the recipient has complied or is complying with these Title IX regulations. In the case of any program under which a primary recipient extends Federal financial assistance to any other recipient, such other recipient shall also submit such compliance reports to the primary recipient as may be necessary to enable the primary recipient to carry out its obligations under these Title IX regulations.

(c) *Access to sources of information.* Each recipient shall permit access by the designated agency official (or designee) during normal business hours to such of its books, records, accounts, and other sources of information, and its facilities as may be pertinent to ascertain compliance with these Title IX regulations. Where any information required of a recipient is in the exclusive possession of any other agency, institution, or person and this agency, institution, or person shall fail or refuse to furnish this information the recipient shall so certify in its report and shall set forth what efforts it has made to obtain the information. Asserted considerations of privacy or confidentiality may not operate to bar the agency from evaluating or seeking to enforce compliance with these Title IX regulations. Information of a confidential nature obtained in connection with compliance evaluation or enforcement shall not be disclosed except where necessary in formal enforcement proceedings or where otherwise required by law.

(d) *Information to beneficiaries and participants.* Each recipient shall make available to participants, beneficiaries, and other interested persons such information regarding the provisions of these Title IX regulations and their applicability to the program for which the recipient receives Federal financial assistance, and make such information available to them in such manner, as the designated agency official finds necessary to apprise such persons of the protections against discrimination assured them by Title IX and these Title IX regulations.

[65 FR 52886, Aug. 30, 2000]

### § 1211.610 Conduct of investigations.

(a) *Periodic compliance reviews.* The designated agency official (or designee) shall from time to time review the practices of recipients to determine whether they are complying with these Title IX regulations.

(b) *Complaints.* Any person who believes himself or herself or any specific class of individuals to be subjected to discrimination prohibited by these

Title IX regulations may by himself or herself or by a representative file with the designated agency official (or designee) a written complaint. A complaint must be filed not later than 180 days from the date of the alleged discrimination, unless the time for filing is extended by the designated agency official (or designee).

(c) *Investigations.* The designated agency official (or designee) will make a prompt investigation whenever a compliance review, report, complaint, or any other information indicates a possible failure to comply with these Title IX regulations. The investigation should include, where appropriate, a review of the pertinent practices and policies of the recipient, the circumstances under which the possible noncompliance with these Title IX regulations occurred, and other factors relevant to a determination as to whether the recipient has failed to comply with these Title IX regulations.

(d) *Resolution of matters.* (1) If an investigation pursuant to paragraph (c) of this section indicates a failure to comply with these Title IX regulations, the designated agency official (or designee) will so inform the recipient and the matter will be resolved by informal means whenever possible. If it has been determined that the matter cannot be resolved by informal means, action will be taken as provided for in § 1211.615.

(2) If an investigation does not warrant action pursuant to paragraph (d)(1) of this section the designated agency official (or designee) will so inform the recipient and the complainant, if any, in writing.

(e) *Intimidatory or retaliatory acts prohibited.* No recipient or other person shall intimidate, threaten, coerce, or discriminate against any individual for the purpose of interfering with any right or privilege secured by Title IX or these Title IX regulations, or because he or she has made a complaint, testified, assisted, or participated in any manner in an investigation, proceeding, or hearing under these Title IX regulations. The identity of complainants shall be kept confidential except to the extent necessary to carry out the purposes of these Title IX regulations, including the conduct of any investigation, hearing, or judicial proceeding arising under these Title IX regulations.

[65 FR 52887, Aug. 30, 2000]

### § 1211.615 Procedure for effecting compliance.

(a) *General.* If there appears to be a failure or threatened failure to comply with these Title IX regulations, and if the noncompliance or threatened noncompliance cannot be corrected by informal means, compliance with these Title IX regulations may be effected by the suspension or termination of or refusal to grant or to continue Federal financial assistance or by any other means authorized by law. Such other means may include, but are not limited to:

(1) A reference to the Department of Justice with a recommendation that appropriate proceedings be brought to enforce any rights of the United States under any law of the United States, or any assurance or other contractual undertaking; and

(2) Any applicable proceeding under State or local law.

(b) *Noncompliance with § 1211.115.* If an applicant fails or refuses to furnish an assurance or otherwise fails or refuses to comply with a requirement imposed by or pursuant to § 1211.115, Federal financial assistance may be refused in accordance with the procedures of paragraph (c) of this section. The agency shall not be required to provide assistance in such a case during the pendency of the administrative proceedings under paragraph (c) of this section except that the agency shall continue assistance during the pendency of such proceedings where such assistance is due and payable pursuant to an application therefor approved prior to September 29, 2000.

(c) *Termination of or refusal to grant or to continue Federal financial assistance.* (1) No order suspending, terminating, or refusing to grant or continue Federal financial assistance shall become effective until:

(i) The designated agency official has advised the applicant or recipient of its failure to comply and has determined that compliance cannot be secured by voluntary means;

(ii) There has been an express finding on the record, after opportunity for

hearing, of a failure by the applicant or recipient to comply with a requirement imposed by or pursuant to these Title IX regulations; and

(iii) The expiration of 30 days after the Archivist has filed with the committee of the House, and the committee of the Senate having legislative jurisdiction over the program involved, a full written report of the circumstances and the grounds for such action.

(2) Any action to suspend or terminate or to refuse to grant or to continue Federal financial assistance shall be limited to the particular political entity, or part thereof, or other applicant or recipient as to whom such a finding has been made and shall be limited in its effect to the particular program, or part thereof, in which such noncompliance has been so found.

(d) *Other means authorized by law.* (1) No action to effect compliance by any other means authorized by law shall be taken until:

(i) The designated agency official has determined that compliance cannot be secured by voluntary means;

(ii) The recipient has been notified of its failure to comply and of the action to be taken to effect compliance; and

(iii) The expiration of at least 10 days from the mailing of such notice to the recipient.

(2) During this period of at least 10 days additional efforts shall be made to persuade the recipient to comply with these Title IX regulations and to take such corrective action as may be appropriate.

[65 FR 52887, Aug. 30, 2000]

### § 1211.620 Hearings.

(a) *Opportunity for hearing.* Whenever an opportunity for a hearing is required by § 1211.615(c), reasonable notice shall be given by registered or certified mail, return receipt requested, to the affected applicant or recipient. This notice shall advise the applicant or recipient of the action proposed to be taken, the specific provision under which the proposed action against it is to be taken, and the matters of fact or law asserted as the basis for this action, and either:

(1) Fix a date not less than 20 days after the date of such notice within which the applicant or recipient may request of the designated agency official that the matter be scheduled for hearing; or

(2) Advise the applicant or recipient that the matter in question has been set down for hearing at a stated place and time. The time and place so fixed shall be reasonable and shall be subject to change for cause. The complainant, if any, shall be advised of the time and place of the hearing. An applicant or recipient may waive a hearing and submit written information and argument for the record. The failure of an applicant or recipient to request a hearing for which a date has been set shall be deemed to be a waiver of the right to a hearing under 20 U.S.C. 1682 and § 1211.615(c) and consent to the making of a decision on the basis of such information as may be filed as the record.

(b) *Time and place of hearing.* Hearings shall be held at the offices of the agency in Washington, DC, at a time fixed by the designated agency official unless the official determines that the convenience of the applicant or recipient or of the agency requires that another place be selected. Hearings shall be held before a hearing officer designated in accordance with 5 U.S.C. 556(b).

(c) *Right to counsel.* In all proceedings under this section, the applicant or recipient and the agency shall have the right to be represented by counsel.

(d) *Procedures, evidence, and record.* (1) The hearing, decision, and any administrative review thereof shall be conducted in conformity with 5 U.S.C. 554–557 (sections 5 through 8 of the Administrative Procedure Act), and in accordance with such rules of procedure as are proper (and not inconsistent with this section) relating to the conduct of the hearing, giving of notices subsequent to those provided for in paragraph (a) of this section, taking of testimony, exhibits, arguments and briefs, requests for findings, and other related matters. Both the agency and the applicant or recipient shall be entitled to introduce all relevant evidence on the issues as stated in the notice for hearing or as determined by the hearing officer at the outset of or during the hearing. Any person (other than a Government employee considered to be

on official business) who, having been invited or requested to appear and testify as a witness on the Government's behalf, attends at a time and place scheduled for a hearing provided for by these Title IX regulations, may be reimbursed for his or her travel and actual expenses of attendance in an amount not to exceed the amount payable under the standardized travel regulations to a Government employee traveling on official business.

(2) Technical rules of evidence shall not apply to hearings conducted pursuant to these Title IX regulations, but rules or principles designed to assure production of the most credible evidence available and to subject testimony to test by cross-examination shall be applied where reasonably necessary by the hearing officer. The hearing officer may exclude irrelevant, immaterial, or unduly repetitious evidence. All documents and other evidence offered or taken for the record shall be open to examination by the parties and opportunity shall be given to refute facts and arguments advanced on either side of the issues. A transcript shall be made of the oral evidence except to the extent the substance thereof is stipulated for the record. All decisions shall be based upon the hearing record and written findings shall be made.

(e) *Consolidated or joint hearings.* In cases in which the same or related facts are asserted to constitute noncompliance with these Title IX regulations with respect to two or more programs to which these Title IX regulations apply, or noncompliance with these Title IX regulations and the regulations of one or more other Federal departments or agencies issued under Title IX, the designated agency official may, by agreement with such other departments or agencies where applicable, provide for the conduct of consolidated or joint hearings, and for the application to such hearings of rules of procedures not inconsistent with these Title IX regulations. Final decisions in such cases, insofar as these Title IX regulations are concerned, shall be made in accordance with § 1211.625.

[65 FR 52887, Aug. 30, 2000]

**§ 1211.625 Decisions and notices.**

(a) *Decisions by hearing officers.* After a hearing is held by a hearing officer such hearing officer shall either make an initial decision, if so authorized, or certify the entire record including recommended findings and proposed decision to the reviewing authority for a final decision, and a copy of such initial decision or certification shall be mailed to the applicant or recipient and to the complainant, if any. Where the initial decision referred to in this paragraph or in paragraph (c) of this section is made by the hearing officer, the applicant or recipient or the counsel for the agency may, within the period provided for in the rules of procedure issued by the designated agency official, file with the reviewing authority exceptions to the initial decision, with the reasons therefor. Upon the filing of such exceptions the reviewing authority shall review the initial decision and issue its own decision thereof including the reasons therefor. In the absence of exceptions the initial decision shall constitute the final decision, subject to the provisions of paragraph (e) of this section.

(b) *Decisions on record or review by the reviewing authority.* Whenever a record is certified to the reviewing authority for decision or it reviews the decision of a hearing officer pursuant to paragraph (a) or (c) of this section, the applicant or recipient shall be given reasonable opportunity to file with it briefs or other written statements of its contentions, and a copy of the final decision of the reviewing authority shall be given in writing to the applicant or recipient and to the complainant, if any.

(c) *Decisions on record where a hearing is waived.* Whenever a hearing is waived pursuant to § 1211.620, the reviewing authority shall make its final decision on the record or refer the matter to a hearing officer for an initial decision to be made on the record. A copy of such decision shall be given in writing to the applicant or recipient, and to the complainant, if any.

(d) *Rulings required.* Each decision of a hearing officer or reviewing authority shall set forth a ruling on each

finding, conclusion, or exception presented, and shall identify the requirement or requirements imposed by or pursuant to these Title IX regulations with which it is found that the applicant or recipient has failed to comply.

(e) *Review in certain cases by the Archivist of the United States.* If the Archivist has not personally made the final decision referred to in paragraph (a), (b), or (c) of this section, a recipient or applicant or the counsel for the agency may request the Archivist to review a decision of the reviewing authority in accordance with rules of procedure issued by the designated agency official. Such review is not a matter of right and shall be granted only where the Archivist determines there are special and important reasons therefor. The Archivist may grant or deny such request, in whole or in part. The Archivist may also review such a decision upon his own motion in accordance with rules of procedure issued by the National Archives and Records Administration. In the absence of a review under this paragraph (e), a final decision referred to in paragraph (a), (b), or (c) of this section shall become the final decision of the agency when the Archivist transmits it as such to Congressional committees with the report required under 20 U.S.C. 1682. Failure of an applicant or recipient to file an exception with the reviewing authority or to request review under this paragraph (e) shall not be deemed a failure to exhaust administrative remedies for the purpose of obtaining judicial review.

(f) *Content of orders.* The final decision may provide for suspension or termination of, or refusal to grant or continue Federal financial assistance, in whole or in part, to which these Title IX regulations apply, and may contain such terms, conditions, and other provisions as are consistent with and will effectuate the purposes of Title IX and these Title IX regulations, including provisions designed to assure that no Federal financial assistance to which these Title IX regulations apply will thereafter be extended under such law or laws to the applicant or recipient determined by such decision to be in default in its performance of an assurance given by it pursuant to these Title IX regulations, or to have otherwise failed to comply with these Title IX regulations unless and until it corrects its noncompliance and satisfies the designated agency official that it will fully comply with these Title IX regulations.

(g) *Post-termination proceedings.* (1) An applicant or recipient adversely affected by an order issued under paragraph (f) of this section shall be restored to full eligibility to receive Federal financial assistance if it satisfies the terms and conditions of that order for such eligibility or if it brings itself into compliance with these Title IX regulations and provides reasonable assurance that it will fully comply with these Title IX regulations. An elementary or secondary school or school system that is unable to file an assurance of compliance shall be restored to full eligibility to receive Federal financial assistance if it files a court order or a plan for desegregation that meets the applicable requirements and provides reasonable assurance that it will comply with the court order or plan.

(2) Any applicant or recipient adversely affected by an order entered pursuant to paragraph (f) of this section may at any time request the designated agency official to restore fully its eligibility to receive Federal financial assistance. Any such request shall be supported by information showing that the applicant or recipient has met the requirements of paragraph (g)(1) of this section. If the designated agency official determines that those requirements have been satisfied, the official shall restore such eligibility.

(3) If the designated agency official denies any such request, the applicant or recipient may submit a request for a hearing in writing, specifying why it believes such official to have been in error. It shall thereupon be given an expeditious hearing, with a decision on the record, in accordance with rules of procedure issued by the designated agency official. The applicant or recipient will be restored to such eligibility if it proves at such hearing that it satisfied the requirements of paragraph (g)(1) of this section. While proceedings under this paragraph (g) are pending, the sanctions imposed by the order

issued under paragraph (f) of this section shall remain in effect.

[65 FR 52888, Aug. 30, 2000]

### § 1211.630 Judicial review.

Action taken pursuant to 20 U.S.C. 1682 is subject to judicial review as provided in 20 U.S.C. 1683.

[65 FR 52889, Aug. 30, 2000]

### § 1211.635 Forms and instructions; coordination.

(a) *Forms and instructions.* The designated agency official shall issue and promptly make available to interested persons forms and detailed instructions and procedures for implementing these Title IX regulations.

(b) *Supervision and coordination.* The Archivist or his designee may from time to time assign to officials of the agency, or to officials of other departments or agencies of the Government with the consent of such departments or agencies, responsibilities in connection with the effectuation of the purposes of Title IX and these Title IX regulations (other than responsibility for review as provided in § 1211.625(e)), including the achievements of effective coordination and maximum uniformity within the agency and within the Executive Branch of the Government in the application of Title IX and these Title IX regulations to similar programs and in similar situations. Any action taken, determination made, or requirement imposed by an official of another department or agency acting pursuant to an assignment of responsibility under this section shall have the same effect as though such action had been taken by the designated official of this agency.

[65 FR 52889, Aug. 30, 2000]

# PART 1212—GOVERNMENTWIDE REQUIREMENTS FOR DRUG-FREE WORKPLACE (FINANCIAL ASSISTANCE)

## Subpart A—Purpose and Coverage

Sec.
1212.100 What does this part do?
1212.105 Does this part apply to me?
1212.110 Are any of my Federal assistance awards exempt from this part?
1212.115 Does this part affect the Federal contracts that I receive?

## Subpart B—Requirements for Recipients Other Than Individuals

1212.200 What must I do to comply with this part?
1212.205 What must I include in my drug-free workplace statement?
1212.210 To whom must I distribute my drug-free workplace statement?
1212.215 What must I include in my drug-free awareness program?
1212.220 By when must I publish my drug-free workplace statement and establish my drug-free awareness program?
1212.225 What actions must I take concerning employees who are convicted of drug violations in the workplace?
1212.230 How and when must I identify workplaces?

## Subpart C—Requirements for Recipients Who Are Individuals

1212.300 What must I do to comply with this part if I am an individual recipient?
1212.301 [Reserved]

## Subpart D—Responsibilities of NARA Awarding Officials

1212.400 What are my responsibilities as a NARA awarding official?

## Subpart E—Violations of This Part and Consequences

1212.500 How are violations of this part determined for recipients other than individuals?
1212.505 How are violations of this part determined for recipients who are individuals?
1212.510 What actions will the Federal Government take against a recipient determined to have violated this part?
1212.515 Are there any exceptions to those actions?

## Subpart F—Definitions

1212.605 Award.
1212.610 Controlled substance.
1212.615 Conviction.
1212.620 Cooperative agreement.
1212.625 Criminal drug statute
1212.630 Debarment.
1212.635 Drug-free workplace.
1212.640 Employee.
1212.645 Federal agency or agency.
1212.650 Grant.
1212.655 Individual.
1212.660 Recipient.
1212.665 State.
1212.670 Suspension.

AUTHORITY: 41 U.S.C. 701, *et seq.;* 44 U.S.C. 2104(a).

SOURCE: 68 FR 66544, 66617, Nov. 26, 2003, unless otherwise noted.

## Subpart A—Purpose and Coverage

### § 1212.100 What does this part do?

This part carries out the portion of the Drug-Free Workplace Act of 1988 (41 U.S.C. 701 *et seq.*, as amended) that applies to grants. It also applies the provisions of the Act to cooperative agreements and other financial assistance awards, as a matter of Federal Government policy.

### § 1212.105 Does this part apply to me?

(a) Portions of this part apply to you if you are either—

(1) A recipient of an assistance award from the NARA; or

(2) A(n) NARA awarding official. (See definitions of award and recipient in §§ 1212.605 and 1212.660, respectively.)

(b) The following table shows the subparts that apply to you:

| If you are . . . | see subparts . . . |
|---|---|
| (1) A recipient who is not an individual | A, B and E. |
| (2) A recipient who is an individual ..... | A, C and E. |
| (3) A(n) NARA awarding official ..... | A, D and E. |

### § 1212.110 Are any of my Federal assistance awards exempt from this part?

This part does not apply to any award that the Archivist of the United States or designee determines that the application of this part would be inconsistent with the international obligations of the United States or the laws or regulations of a foreign government.

### § 1212.115 Does this part affect the Federal contracts that I receive?

It will affect future contract awards indirectly if you are debarred or suspended for a violation of the requirements of this part, as described in § 1212. 510(c). However, this part does not apply directly to procurement contracts. The portion of the Drug-Free Workplace Act of 1988 that applies to Federal procurement contracts is carried out through the Federal Acquisition Regulation in chapter 1 of Title 48 of the Code of Federal Regulations (the drug-free workplace coverage currently is in 48 CFR part 23, subpart 23.5).

## Subpart B—Requirements for Recipients Other Than Individuals

### § 1212.200 What must I do to comply with this part?

There are two general requirements if you are a recipient other than an individual.

(a) First, you must make a good faith effort, on a continuing basis, to maintain a drug-free workplace. You must agree to do so as a condition for receiving any award covered by this part. The specific measures that you must take in this regard are described in more detail in subsequent sections of this subpart. Briefly, those measures are to—

(1) Publish a drug-free workplace statement and establish a drug-free awareness program for your employees (see §§ 1212.205 through 1212.220); and

(2) Take actions concerning employees who are convicted of violating drug statutes in the workplace (see § 1212.225).

(b) Second, you must identify all known workplaces under your Federal awards (see § 1212.230).

### § 1212.205 What must I include in my drug-free workplace statement?

You must publish a statement that—

(a) Tells your employees that the unlawful manufacture, distribution, dispensing, possession, or use of a controlled substance is prohibited in your workplace;

(b) Specifies the actions that you will take against employees for violating that prohibition; and

(c) Lets each employee know that, as a condition of employment under any award, he or she:

(1) Will abide by the terms of the statement; and

(2) Must notify you in writing if he or she is convicted for a violation of a criminal drug statute occurring in the workplace and must do so no more than five calendar days after the conviction.

### § 1212.210 To whom must I distribute my drug-free workplace statement?

You must require that a copy of the statement described in § 1212.205 be given to each employee who will be engaged in the performance of any Federal award.

### § 1212.215 What must I include in my drug-free awareness program?

You must establish an ongoing drug-free awareness program to inform employees about—

(a) The dangers of drug abuse in the workplace;

(b) Your policy of maintaining a drug-free workplace;

(c) Any available drug counseling, rehabilitation, and employee assistance programs; and

(d) The penalties that you may impose upon them for drug abuse violations occurring in the workplace.

### § 1212.220 By when must I publish my drug-free workplace statement and establish my drug-free awareness program?

If you are a new recipient that does not already have a policy statement as described in § 1212.205 and an ongoing awareness program as described in § 1212.215, you must publish the statement and establish the program by the time given in the following table:

| If . . . | then you . . . |
|---|---|
| (a) The performance period of the award is less than 30 days. | must have the policy statement and program in place as soon as possible, but before the date on which performance is expected to be completed. |
| (b) The performance period of the award is 30 days or more. | must have the policy statement and program in place within 30 days after award. |
| (c) You believe there are extraordinary circumstances that will require more than 30 days for you to publish the policy statement and establish the awareness program. | may ask the NARA awarding official to give you more time to do so. The amount of additional time, if any, to be given is at the discretion of the awarding official. |

### § 1212.225 What actions must I take concerning employees who are convicted of drug violations in the workplace?

There are two actions you must take if an employee is convicted of a drug violation in the workplace:

(a) First, you must notify Federal agencies if an employee who is engaged in the performance of an award informs you about a conviction, as required by § 1212.205(c)(2), or you otherwise learn of the conviction. Your notification to the Federal agencies must__

(1) Be in writing;

(2) Include the employee's position title;

(3) Include the identification number(s) of each affected award;

(4) Be sent within ten calendar days after you learn of the conviction; and

(5) Be sent to every Federal agency on whose award the convicted employee was working. It must be sent to every awarding official or his or her official designee, unless the Federal agency has specified a central point for the receipt of the notices.

(b) Second, within 30 calendar days of learning about an employee's conviction, you must either__

(1) Take appropriate personnel action against the employee, up to and including termination, consistent with the requirements of the Rehabilitation Act of 1973 (29 U.S.C. 794), as amended; or

(2) Require the employee to participate satisfactorily in a drug abuse assistance or rehabilitation program approved for these purposes by a Federal, State or local health, law enforcement, or other appropriate agency.

### § 1212.230 How and when must I identify workplaces?

(a) You must identify all known workplaces under each NARA award. A failure to do so is a violation of your drug-free workplace requirements. You may identify the workplaces__

(1) To the NARA official that is making the award, either at the time of application or upon award; or

(2) In documents that you keep on file in your offices during the performance of the award, in which case you must make the information available for inspection upon request by NARA officials or their designated representatives.

(b) Your workplace identification for an award must include the actual address of buildings (or parts of buildings) or other sites where work under

the award takes place. Categorical descriptions may be used (e.g., all vehicles of a mass transit authority or State highway department while in operation, State employees in each local unemployment office, performers in concert halls or radio studios).

(c) If you identified workplaces to the NARA awarding official at the time of application or award, as described in paragraph (a)(1) of this section, and any workplace that you identified changes during the performance of the award, you must inform the NARA awarding official.

## Subpart C—Requirements for Recipients Who Are Individuals

### § 1212.300 What must I do to comply with this part if I am an individual recipient?

As a condition of receiving a(n) NARA award, if you are an individual recipient, you must agree that—

(a) You will not engage in the unlawful manufacture, distribution, dispensing, possession, or use of a controlled substance in conducting any activity related to the award; and

(b) If you are convicted of a criminal drug offense resulting from a violation occurring during the conduct of any award activity, you will report the conviction:

(1) In writing.

(2) Within 10 calendar days of the conviction.

(3) To the NARA awarding official or other designee for each award that you currently have, unless § 1212.301 or the award document designates a central point for the receipt of the notices. When notice is made to a central point, it must include the identification number(s) of each affected award.

### § 1212.301 [Reserved]

## Subpart D—Responsibilities of NARA Awarding Officials

### § 1212.400 What are my responsibilities as a(n) NARA awarding official?

As a(n) NARA awarding official, you must obtain each recipient's agreement, as a condition of the award, to comply with the requirements in—

(a) Subpart B of this part, if the recipient is not an individual; or

(b) Subpart C of this part, if the recipient is an individual.

## Subpart E—Violations of this Part and Consequences

### § 1212.500 How are violations of this part determined for recipients other than individuals?

A recipient other than an individual is in violation of the requirements of this part if the Archivist of the United States or designee determines, in writing, that—

(a) The recipient has violated the requirements of subpart B of this part; or

(b) The number of convictions of the recipient's employees for violating criminal drug statutes in the workplace is large enough to indicate that the recipient has failed to make a good faith effort to provide a drug-free workplace.

### § 1212.505 How are violations of this part determined for recipients who are individuals?

An individual recipient is in violation of the requirements of this part if the Archivist of the United States or designee determines, in writing, that—

(a) The recipient has violated the requirements of subpart C of this part; or

(b) The recipient is convicted of a criminal drug offense resulting from a violation occurring during the conduct of any award activity.

### § 1212.510 What actions will the Federal Government take against a recipient determined to have violated this part?

If a recipient is determined to have violated this part, as described in § 1212.500 or § 1212.505, the NARA may take one or more of the following actions—

(a) Suspension of payments under the award;

(b) Suspension or termination of the award; and

(c) Suspension or debarment of the recipient under 36 CFR part 1209, for a period not to exceed five years.

[68 FR 66544, 66617, Nov. 26, 2003, as amended at 68 FR 66617, Nov. 26, 2003]

### § 1212.515 Are there any exceptions to those actions?

The Archivist of the United States or designee may waive with respect to a particular award, in writing, a suspension of payments under an award, suspension or termination of an award, or suspension or debarment of a recipient if the Archivist of the United States or designee determines that such a waiver would be in the public interest. This exception authority cannot be delegated to any other official.

## Subpart F—Definitions

### § 1212.605 Award.

*Award* means an award of financial assistance by the NARA or other Federal agency directly to a recipient.

(a) The term award includes:

(1) A Federal grant or cooperative agreement, in the form of money or property in lieu of money.

(2) A block grant or a grant in an entitlement program, whether or not the grant is exempted from coverage under the Governmentwide rule 36 CFR part 1207 that implements OMB Circular A–102 (for availability, see 5 CFR 1310.3) and specifies uniform administrative requirements.

(b) The term award does not include:

(1) Technical assistance that provides services instead of money.

(2) Loans.

(3) Loan guarantees.

(4) Interest subsidies.

(5) Insurance.

(6) Direct appropriations.

(7) Veterans' benefits to individuals (*i.e.*, any benefit to veterans, their families, or survivors by virtue of the service of a veteran in the Armed Forces of the United States).

[68 FR 66544, 66617, Nov. 26, 2003, as amended at 68 FR 66617, Nov. 26, 2003]

### § 1212.610 Controlled substance.

*Controlled substance* means a controlled substance in schedules I through V of the Controlled Substances Act (21 U.S.C. 812), and as further defined by regulation at 21 CFR 1308.11 through 1308.15.

### § 1212.615 Conviction.

*Conviction* means a finding of guilt (including a plea of nolo contendere) or imposition of sentence, or both, by any judicial body charged with the responsibility to determine violations of the Federal or State criminal drug statutes.

### § 1212.620 Cooperative agreement.

*Cooperative agreement* means an award of financial assistance that, consistent with 31 U.S.C. 6305, is used to enter into the same kind of relationship as a grant (see definition of grant in § 1212.650), except that substantial involvement is expected between the Federal agency and the recipient when carrying out the activity contemplated by the award. The term does not include cooperative research and development agreements as defined in 15 U.S.C. 3710a.

### § 1212.625 Criminal drug statute.

*Criminal drug statute* means a Federal or non-Federal criminal statute involving the manufacture, distribution, dispensing, use, or possession of any controlled substance.

### § 1212.630 Debarment.

*Debarment* means an action taken by a Federal agency to prohibit a recipient from participating in Federal Government procurement contracts and covered nonprocurement transactions. A recipient so prohibited is debarred, in accordance with the Federal Acquisition Regulation for procurement contracts (48 CFR part 9, subpart 9.4) and the common rule, Government-wide Debarment and Suspension (Nonprocurement), that implements Executive Order 12549 and Executive Order 12689.

### § 1212.635 Drug-free workplace.

*Drug-free workplace* means a site for the performance of work done in connection with a specific award at which employees of the recipient are prohibited from engaging in the unlawful manufacture, distribution, dispensing, possession, or use of a controlled substance.

**§ 1212.640 Employee.**

(a) *Employee* means the employee of a recipient directly engaged in the performance of work under the award, including—

(1) All direct charge employees;

(2) All indirect charge employees, unless their impact or involvement in the performance of work under the award is insignificant to the performance of the award; and

(3) Temporary personnel and consultants who are directly engaged in the performance of work under the award and who are on the recipient's payroll.

(b) This definition does not include workers not on the payroll of the recipient (e.g., volunteers, even if used to meet a matching requirement; consultants or independent contractors not on the payroll; or employees of subrecipients or subcontractors in covered workplaces).

**§ 1212.645 Federal agency or agency.**

*Federal agency or agency* means any United States executive department, military department, government corporation, government controlled corporation, any other establishment in the executive branch (including the Executive Office of the President), or any independent regulatory agency.

**§ 1212.650 Grant.**

*Grant* means an award of financial assistance that, consistent with 31 U.S.C. 6304, is used to enter into a relationship—

(a) The principal purpose of which is to transfer a thing of value to the recipient to carry out a public purpose of support or stimulation authorized by a law of the United States, rather than to acquire property or services for the Federal Government's direct benefit or use; and

(b) In which substantial involvement is not expected between the Federal agency and the recipient when carrying out the activity contemplated by the award.

**§ 1212.655 Individual.**

*Individual* means a natural person.

**§ 1212.660 Recipient.**

*Recipient* means any individual, corporation, partnership, association, unit of government (except a Federal agency) or legal entity, however organized, that receives an award directly from a Federal agency.

**§ 1212.665 State.**

*State* means any of the States of the United States, the District of Columbia, the Commonwealth of Puerto Rico, or any territory or possession of the United States.

**§ 1212.670 Suspension.**

*Suspension* means an action taken by a Federal agency that immediately prohibits a recipient from participating in Federal Government procurement contracts and covered nonprocurement transactions for a temporary period, pending completion of an investigation and any judicial or administrative proceedings that may ensue. A recipient so prohibited is suspended, in accordance with the Federal Acquisition Regulation for procurement contracts (48 CFR part 9, subpart 9.4) and the common rule, Government-wide Debarment and Suspension (Nonprocurement), that implements Executive Order 12549 and Executive Order 12689. Suspension of a recipient is a distinct and separate action from suspension of an award or suspension of payments under an award.

# SUBCHAPTER B—RECORDS MANAGEMENT

## PART 1220—FEDERAL RECORDS; GENERAL

### Subpart A—General Provisions of Subchapter B

Sec.
1220.1 What is the scope of Subchapter B?
1220.2 What are the authorities for Subchapter B?
1220.3 What standards are used as guidelines for Subchapter B?
1220.10 Who is responsible for records management?
1220.12 What are NARA's records management responsibilities?
1220.14 Who must follow the regulations in Subchapter B?
1220.16 What recorded information must be managed in accordance with the regulations in Subchapter B?
1220.18 What definitions apply to the regulations in Subchapter B?
1220.20 What NARA acronyms are used throughout Subchapter B?

### Subpart B—Agency Records Management Program Responsibilities

1220.30 What are an agency's records management responsibilities?
1220.32 What records management principles must agencies implement?
1220.34 What must an agency do to carry out its records management responsibilities?

AUTHORITY: 44 U.S.C. Chapters 21, 29, 31, and 33.

SOURCE: 74 FR 51014, Oct. 2, 2009, unless otherwise noted.

### § 1220.1 What is the scope of Subchapter B?

Subchapter B specifies policies for Federal agencies' records management programs relating to proper records creation and maintenance, adequate documentation, and records disposition.

### § 1220.2 What are the authorities for Subchapter B?

The regulations in this subchapter implement the provisions of 44 U.S.C. Chapters 21, 29, 31, and 33.

### § 1220.3 What standards are used as guidelines for Subchapter B?

These regulations are in conformance with ISO 15489–1:2001, Information and documentation—Records management. Other standards relating to specific sections of the regulations are cited where appropriate.

### § 1220.10 Who is responsible for records management?

(a) The National Archives and Records Administration (NARA) is responsible for overseeing agencies' adequacy of documentation and records disposition programs and practices, and the General Services Administration (GSA) is responsible for overseeing economy and efficiency in records management. The Archivist of the United States and the Administrator of GSA issue regulations and provide guidance and assistance to Federal agencies on records management programs. NARA regulations are in this subchapter. GSA regulations are in 41 CFR parts 102–193.

(b) Federal agencies are responsible for establishing and maintaining a records management program that complies with NARA and GSA regulations and guidance. Subpart B of this part sets forth basic agency records management requirements.

### § 1220.12 What are NARA's records management responsibilities?

(a) The Archivist of the United States issues regulations and provides guidance and assistance to Federal agencies on ensuring adequate and proper documentation of the organization, functions, policies, decisions, procedures, and essential transactions of the Federal Government and ensuring proper records disposition, including standards for improving the management of records.

(b) NARA establishes standards for the retention of records having continuing value (permanent records), and assists Federal agencies in applying the standards to records in their custody.

(c) Through a records scheduling and appraisal process, the Archivist of the

United States determines which Federal records have temporary value and may be destroyed and which Federal records have permanent value and must be preserved and transferred to the National Archives of the United States. The Archivist's determination constitutes mandatory authority for the final disposition of all Federal records.

(d) The Archivist of the United States issues General Records Schedules (GRS) authorizing disposition, after specified periods of time, of records common to several or all Federal agencies.

### § 1220.14 Who must follow the regulations in Subchapter B?

The regulations in Subchapter B apply to Federal agencies as defined in § 1220.18.

### § 1220.16 What recorded information must be managed in accordance with the regulations in Subchapter B?

The requirements in Subchapter B apply to documentary materials that meet the definition of Federal records. See also Part 1222 of this subchapter.

### § 1220.18 What definitions apply to the regulations in Subchapter B?

As used in subchapter B—

*Adequate and proper documentation* means a record of the conduct of Government business that is complete and accurate to the extent required to document the organization, functions, policies, decisions, procedures, and essential transactions of the agency and that is designed to furnish the information necessary to protect the legal and financial rights of the Government and of persons directly affected by the agency's activities.

*Agency (see Executive agency and Federal agency).*

*Appraisal* is the process by which the NARA determines the value and the final disposition of Federal records, designating them either temporary or permanent.

*Commercial records storage facility* is a private sector commercial facility that offers records storage, retrieval, and disposition services.

*Comprehensive schedule* is an agency manual or directive containing descriptions of and disposition instructions for documentary materials in all physical forms, record and nonrecord, created by a Federal agency or major component of an Executive department. Unless taken from General Records Schedules (GRS) issued by NARA, the disposition instructions for records must be approved by NARA on one or more Standard Form(s) 115, Request for Records Disposition Authority, prior to issuance by the agency. The disposition instructions for nonrecord materials are established by the agency and do not require NARA approval. See also *records schedule.*

*Contingent records* are records whose final disposition is dependent on an action or event, such as sale of property or destruction of a facility, which will take place at some unspecified time in the future.

*Disposition* means those actions taken regarding records no longer needed for the conduct of the regular current business of the agency.

*Disposition authority* means the legal authorization for the retention and disposal of records. For Federal records it is found on SF 115s, Request for Records Disposition Authority, which have been approved by the Archivist of the United States. For nonrecord materials, the disposition is established by the creating or custodial agency. See also *records schedule.*

*Documentary materials* is a collective term that refers to recorded information, regardless of the medium or the method or circumstances of recording.

*Electronic record* means any information that is recorded in a form that only a computer can process and that satisfies the definition of a Federal record under the Federal Records Act. The term includes both record content and associated metadata that the agency determines is required to meet agency business needs.

*Evaluation* means the selective or comprehensive inspection, audit, or review of one or more Federal agency records management programs for effectiveness and for compliance with applicable laws and regulations. It includes recommendations for correcting

or improving records management policies and procedures, and follow-up activities, including reporting on and implementing the recommendations.

*Executive agency* means any executive department or independent establishment in the Executive branch of the U.S. Government, including any wholly owned Government corporation.

*Federal agency* means any executive agency or any establishment in the Legislative or Judicial branches of the Government (except the Supreme Court, Senate, the House of Representatives, and the Architect of the Capitol and any activities under his direction). (44 U.S.C. 2901(14)).

*Federal records (see records).*

*File* means an arrangement of records. The term denotes papers, photographs, maps, electronic information, or other recorded information regardless of physical form or characteristics, accumulated or maintained in filing equipment, boxes, on electronic media, or on shelves, and occupying office or storage space.

*Information system* means the organized collection, processing, transmission, and dissemination of information in accordance with defined procedures, whether automated or manual.

*Metadata* consists of preserved contextual information describing the history, tracking, and/or management of an electronic document.

*National Archives of the United States* is the collection of all records selected by the Archivist of the United States because they have sufficient historical or other value to warrant their continued preservation by the Federal Government and that have been transferred to the legal custody of the Archivist of the United States, currently through execution of a Standard Form (SF) 258 (Agreement to Transfer Records to the National Archives of the United States). See also *permanent record*.

*Nonrecord materials* are those Federally owned informational materials that do not meet the statutory definition of records (44 U.S.C. 3301) or that have been excluded from coverage by the definition. Excluded materials are extra copies of documents kept only for reference, stocks of publications and processed documents, and library or museum materials intended solely for reference or exhibit.

*Permanent record* means any Federal record that has been determined by NARA to have sufficient value to warrant its preservation in the National Archives of the United States, even while it remains in agency custody. Permanent records are those for which the disposition is permanent on SF 115, Request for Records Disposition Authority, approved by NARA on or after May 14, 1973. The term also includes all records accessioned by NARA into the National Archives of the United States.

*Personal files* (also called *personal papers*) are documentary materials belonging to an individual that are not used to conduct agency business. Personal files are excluded from the definition of Federal records and are not owned by the Government.

*Recordkeeping requirements* means all statements in statutes, regulations, and agency directives or other authoritative issuances, that provide general or specific requirements for Federal agency personnel on particular records to be created and maintained by the agency.

*Recordkeeping system* is a manual or electronic system that captures, organizes, and categorizes records to facilitate their preservation, retrieval, use, and disposition.

*Records* or *Federal records* is defined in 44 U.S.C. 3301 as including ''all books, papers, maps, photographs, machine readable materials, or other documentary materials, regardless of physical form or characteristics, made or received by an agency of the United States Government under Federal law or in connection with the transaction of public business and preserved or appropriate for preservation by that agency or its legitimate successor as evidence of the organization, functions, policies, decisions, procedures, operations or other activities of the Government or because of the informational value of the data in them (44 U.S.C. 3301).'' (See also §1222.10 of this part for an explanation of this definition).

*Records center* is defined in 44 U.S.C. 2901(6) as an establishment maintained and operated by the Archivist (NARA Federal Records Center) or by another

Federal agency primarily for the storage, servicing, security, and processing of records which need to be preserved for varying periods of time and need not be retained in office equipment or space. See also *records storage facility*.

*Records management*, as used in subchapter B, means the planning, controlling, directing, organizing, training, promoting, and other managerial activities involved with respect to records creation, records maintenance and use, and records disposition in order to achieve adequate and proper documentation of the policies and transactions of the Federal Government and effective and economical management of agency operations.

*Records schedule or schedule* means any of the following:

(1) A Standard Form 115, Request for Records Disposition Authority that has been approved by NARA to authorize the disposition of Federal records;

(2) A General Records Schedule (GRS) issued by NARA; or

(3) A published agency manual or directive containing the records descriptions and disposition instructions approved by NARA on one or more SF 115s or issued by NARA in the GRS. See also *comprehensive schedule*.

*Records storage facility* is a records center or a commercial records storage facility, as defined in this section, i.e., a facility used by a Federal agency to store Federal records, whether that facility is operated and maintained by the agency, by NARA, by another Federal agency, or by a private commercial entity.

*Retention period* is the length of time that records must be kept.

*Series* means file units or documents arranged according to a filing or classification system or kept together because they relate to a particular subject or function, result from the same activity, document a specific kind of transaction, take a particular physical form, or have some other relationship arising out of their creation, receipt, or use, such as restrictions on access and use. Also called a *records series*.

*Temporary record* means any Federal record that has been determined by the Archivist of the United States to have insufficient value (on the basis of current standards) to warrant its preservation by the National Archives and Records Administration. This determination may take the form of:

(1) Records designated as disposable in an agency records disposition schedule approved by NARA (SF 115, Request for Records Disposition Authority); or

(2) Records designated as disposable in a General Records Schedule.

*Unscheduled records* are Federal records whose final disposition has not been approved by NARA on a SF 115, Request for Records Disposition Authority. Such records must be treated as permanent until a final disposition is approved.

### § 1220.20 What NARA acronyms are used throughout Subchapter B?

As used in Subchapter B—

*NARA* means the National Archives and Records Administration.

*NAS* means the Space and Security Management Division.

*NR* means the Office of Regional Record Services.

*NWCS* means the Special Media Archives Services Division.

*NWM* means Modern Records Programs, which includes NARA records management staff nationwide.

*NWME* means the Electronic and Special Media Records Services Division.

*NWML* means the Lifecycle Management Division.

*NWMW* means the Washington National Records Center.

*NWT* means Preservation Programs.

## Subpart B—Agency Records Management Responsibilities

### § 1220.30 What are an agency's records management responsibilities?

(a) Under 44 U.S.C. 3101, the head of each Federal agency must make and preserve records containing adequate and proper documentation of the organization, functions, policies, decisions, procedures, and essential transactions of the agency. These records must be designed to furnish the information necessary to protect the legal and financial rights of the Government and of persons directly affected by the agency's activities.

(b) Under 44 U.S.C. 3102, the head of each Federal agency must establish

and maintain an active, continuing program for the economical and efficient management of the records of the agency.

(c) Agency records management programs must provide for:

(1) Effective controls over the creation, maintenance, and use of records in the conduct of current business; and

(2) Cooperation with the Archivist and the Administrator of GSA in applying standards, procedures, and techniques designed to improve the management of records, promote the maintenance and security of records deemed appropriate for preservation, and facilitate the segregation and destruction of records of temporary value.

### § 1220.32 What records management principles must agencies implement?

Agencies must create and maintain authentic, reliable, and usable records and ensure that they remain so for the length of their authorized retention period. A comprehensive records management program provides policies and procedures for ensuring that:

(a) Records documenting agency business are created or captured;

(b) Records are organized and maintained to facilitate their use and ensure integrity throughout their authorized retention periods;

(c) Records are available when needed, where needed, and in a usable format to conduct agency business;

(d) Legal and regulatory requirements, relevant standards, and agency policies are followed;

(e) Records, regardless of format, are protected in a safe and secure environment and removal or destruction is carried out only as authorized in records schedules; and

(f) Continuity of operations is supported by a vital records program (see part 1223 of this subchapter).

### § 1220.34 What must an agency do to carry out its records management responsibilities?

To carry out the responsibilities specified in 44 U.S.C. 3101 and 3102, agencies must:

(a) Assign records management responsibility to a person and office with appropriate authority within the agency to coordinate and oversee implementation of the agency comprehensive records management program principles in § 1220.32;

(b) Advise NARA and agency managers of the name(s) of the individual(s) assigned operational responsibility for the agency records management program. To notify NARA, send the name(s), e-mail and postal addresses, phone and fax numbers of the individual(s) to NARA (NWM), 8601 Adelphi Road, College Park, MD 20740–6001 or to *RM.Communications@nara.gov*. The name, title, and phone number of the official or officials authorized by the head of the agency to sign records disposition schedules and requests for transfer of records to the custody of the National Archives must also be submitted to NARA (NWM) or *RM.Communications@nara.gov;*

(c) Issue a directive(s) establishing program objectives, responsibilities, and authorities for the creation, maintenance, and disposition of agency records. Copies of the directive(s) (including subsequent amendments or supplements) must be disseminated throughout the agency, as appropriate, and a copy must be sent to NARA (NWM);

(d) Assign records management responsibilities in each program (mission) and administrative area to ensure incorporation of recordkeeping requirements and records maintenance, storage, and disposition practices into agency programs, processes, systems, and procedures;

(e) Integrate records management and archival requirements into the design, development, and implementation of electronic information systems as specified in § 1236.12 of this subchapter;

(f) Provide guidance and training to all agency personnel on their records management responsibilities, including identification of Federal records, in all formats and media;

(g) Develop records schedules for all records created and received by the agency and obtain NARA approval of the schedules prior to implementation, in accordance with 36 CFR parts 1225 and 1226 of this subchapter;

(h) Comply with applicable policies, procedures, and standards relating to

records management and recordkeeping requirements issued by the Office of Management and Budget, NARA, GSA, or other agencies, as appropriate (see §1222.22 of this subchapter);

(i) Institute controls ensuring that all records, regardless of format or medium, are properly organized, classified or indexed, and described, and made available for use by all appropriate agency staff; and

(j) Conduct formal evaluations to measure the effectiveness of records management programs and practices, and to ensure that they comply with NARA regulations in this subchapter.

# PART 1222—CREATION AND MAINTENANCE OF FEDERAL RECORDS

## Subpart A—Identifying Federal Records

Sec.
1222.1 What are the authorities for Part 1222?
1222.2 What definitions apply to this part?
1222.3 What standards are used as guidance for this part?
1222.10 How should agencies apply the statutory definition of Federal records?
1222.12 What types of documentary materials are Federal records?
1222.14 What are nonrecord materials?
1222.16 How are nonrecord materials managed?
1222.18 Under what conditions may nonrecord materials be removed from government agencies?
1222.20 How are personal files defined and managed?

## Subpart B—Agency Recordkeeping Requirements

1222.22 What records are required to provide for adequate documentation of agency business?
1222.24 How do agencies establish recordkeeping requirements?
1222.26 What are the general recordkeeping requirements for agency programs?
1222.28 What are the series level recordkeeping requirements?
1222.30 When must agencies comply with the recordkeeping requirements of other agencies?
1222.32 How do agencies manage data and records created or received by contractors?
1222.34 How must agencies maintain records?

AUTHORITY: 44 U.S.C. 2904, 3101, 3102, and 3301.

SOURCE: 74 FR 51014, Oct. 2, 2009, unless otherwise noted.

## Subpart A—Identifying Federal Records

### §1222.1 What are the authorities for Part 1222?

The statutory authorities for this part are 44 U.S.C. 2904, 3101, 3102, and 3301.

### §1222.2 What definitions apply to this part?

See §1220.18 of this subchapter for definitions of terms used in part 1222.

### §1222.3 What standards are used as guidance for this part?

These regulations conform with guidance provided in ISO 15489–1:2001, Information and documentation—Records management. Paragraphs 7.1 (Principles of records management programmes), 7.2 (Characteristics of a record), 8.3.5 (Conversion and migration), 8.3.6 (Access, retrieval and use), and 9.6 (Storage and handling) apply to records creation and maintenance.

### §1222.10 How should agencies apply the statutory definition of Federal records?

(a) The statutory definition of Federal records is contained in 44 U.S.C. 3301 and provided in §1220.18 of this subchapter.

(b) Several key terms, phrases, and concepts in the statutory definition of a Federal record are further explained as follows:

(1) *Documentary materials* has the meaning provided in §1220.18 of this subchapter.

(2) *Regardless of physical form or characteristics* means that the medium may be paper, film, disk, or other physical type or form; and that the method of recording may be manual, mechanical, photographic, electronic, or any other combination of these or other technologies.

(3) *Made* means the act of creating and recording information by agency personnel in the course of their official duties, regardless of the method(s) or the medium involved.

(4) *Received* means the acceptance or collection of documentary materials by

or on behalf of an agency or agency personnel in the course of their official duties regardless of their origin (for example, other units of their agency, private citizens, public officials, other agencies, contractors, Government grantees) and regardless of how transmitted (in person or by messenger, mail, electronic means, or by any other method). In this context, the term does not refer to misdirected materials. It may or may not refer to loaned or seized materials depending on the conditions under which such materials came into agency custody or were used by the agency. Advice of legal counsel should be sought regarding the ''record'' status of loaned or seized materials.

(5) *Preserved* means the filing, storing, or any other method of systematically maintaining documentary materials in any medium by the agency. This term covers materials not only actually filed or otherwise systematically maintained but also those temporarily removed from existing filing systems.

(6) *Appropriate for preservation* means documentary materials made or received which, in the judgment of the agency, should be filed, stored, or otherwise systematically maintained by an agency because of the evidence of agency activities or information they contain, even if the materials are not covered by its current filing or maintenance procedures.

### § 1222.12 What types of documentary materials are Federal records?

(a) *General*. To ensure that complete and accurate records are made and retained in the Federal Government, agencies must distinguish between records and nonrecord materials by applying the definition of records (see 44 U.S.C. 3301 and 36 CFR 1220.18 and 1222.10 of this subchapter) to agency documentary materials in all formats and media.

(b) *Record status*. Documentary materials are records when they meet the conditions specified in § 1222.10(b).

(c) *Working files and similar materials*. Working files, such as preliminary drafts and rough notes, and other similar materials, are records that must be maintained to ensure adequate and proper documentation if:

(1) They were circulated or made available to employees, other than the creator, for official purposes such as approval, comment, action, recommendation, follow-up, or to communicate with agency staff about agency business; and

(2) They contain unique information, such as substantive annotations or comments that adds to a proper understanding of the agency's formulation and execution of basic policies, decisions, actions, or responsibilities.

(d) *Record status of copies*. The determination as to whether a particular document is a record does not depend upon whether it contains unique information. Multiple copies of the same document and documents containing duplicative information may each have record status depending on how they are used in conducting agency business.

### § 1222.14 What are nonrecord materials?

Nonrecord materials are U.S. Government-owned documentary materials that do not meet the conditions of records status (see § 1222.12(b)) or that are specifically excluded from the statutory definition of records (see 44 U.S.C. 3301). An agency's records management program also needs to include managing nonrecord materials. There are three specific categories of materials excluded from the statutory definition of records:

(a) Library and museum material (but only if such material is made or acquired and preserved solely for reference or exhibition purposes), including physical exhibits, artifacts, and other material objects lacking evidential value.

(b) Extra copies of documents (but only if the sole reason such copies are preserved is for convenience of reference).

(c) Stocks of publications and of processed documents. Catalogs, trade journals, and other publications that are received from other Government agencies, commercial firms, or private institutions and that require no action and are not part of a case on which action is taken. (Stocks do not include

serial or record sets of agency publications and processed documents, including annual reports, brochures, pamphlets, books, handbooks, posters and maps.)

### § 1222.16 How are nonrecord materials managed?

(a) Agencies must develop recordkeeping requirements to distinguish records from nonrecord materials.

(b) The following guidelines should be used in managing nonrecord materials:

(1) If a clear determination cannot be made, the materials should be treated as records. Agencies may consult with NARA for guidance.

(2) Nonrecord materials must be physically segregated from records or, for electronic non-record materials, readily identified and segregable from records;

(3) Nonrecord materials should be purged when no longer needed for reference. NARA's approval is not required to destroy such materials.

### § 1222.18 Under what conditions may nonrecord materials be removed from Government agencies?

(a) Nonrecord materials, including extra copies of unclassified or formally declassified agency records kept only for convenience of reference, may be removed by departing employees from Government agency custody only with the approval of the head of the agency or the individual(s) authorized to act for the agency on records issues.

(b) National security classified information may not be removed from Government custody, except for a removal of custody taken in accordance with the requirements of the National Industrial Security Program established under Executive Order 12829, as amended, or a successor Order.

(c) Information which is restricted from release under the Privacy Act of 1974 (5 U.S.C. 552a), as amended, or other statutes may not be removed from Government custody except as permitted under those statutes.

(d) This section does not apply to use of records and nonrecord materials in the course of conducting official agency business, including telework and authorized dissemination of information.

### § 1222.20 How are personal files defined and managed?

(a) Personal files are defined in § 1220.18 of this subchapter. This section does not apply to agencies and positions that are covered by the Presidential Records Act of 1978 (44 U.S.C. 2201–2207) (see 36 CFR part 1270 of this chapter).

(b) Personal files must be clearly designated as such and must be maintained separately from the office's official records.

(1) Information about private (non-agency) matters and agency business must not be mixed in outgoing agency documents, such as correspondence and messages.

(2) If information about private matters and agency business appears in a received document, the document is a Federal record. Agencies may make a copy of the document with the personal information deleted or redacted, and treat the copy as the Federal record.

(3) Materials labeled ''personal,'' ''confidential,'' or ''private,'' or similarly designated, and used in the transaction of public business, are Federal records. The use of a label such as ''personal'' does not affect the status of documentary materials in a Federal agency.

## Subpart B—Agency Recordkeeping Requirements

### § 1222.22 What records are required to provide for adequate documentation of agency business?

To meet their obligation for adequate and proper documentation, agencies must prescribe the creation and maintenance of records that:

(a) Document the persons, places, things, or matters dealt with by the agency.

(b) Facilitate action by agency officials and their successors in office.

(c) Make possible a proper scrutiny by the Congress or other duly authorized agencies of the Government.

(d) Protect the financial, legal, and other rights of the Government and of persons directly affected by the Government's actions.

(e) Document the formulation and execution of basic policies and decisions and the taking of necessary actions, including all substantive decisions and commitments reached orally (person-to-person, by telecommunications, or in conference) or electronically.

(f) Document important board, committee, or staff meetings.

### § 1222.24 How do agencies establish recordkeeping requirements?

(a) Agencies must ensure that procedures, directives and other issuances; systems planning and development documentation; and other relevant records include recordkeeping requirements for records in all media, including those records created or received on electronic mail systems. Recordkeeping requirements must:

(1) Identify and prescribe specific categories of records to be systematically created or received and maintained by agency personnel in the course of their official duties;

(2) Specify the use of materials and recording techniques that ensure the preservation of records as long as they are needed by the Government;

(3) Specify the manner in which these materials must be maintained wherever held;

(4) Propose how long records must be maintained for agency business through the scheduling process in part 1225 of this subchapter;

(5) Distinguish records from nonrecord materials and comply with the provisions in Subchapter B concerning records scheduling and disposition;

(6) Include procedures to ensure that departing officials and employees do not remove Federal records from agency custody and remove nonrecord materials only in accordance with § 1222.18;

(7) Define the special recordkeeping responsibilities of program managers, information technology staff, systems administrators, and the general recordkeeping responsibilities of all agency employees.

(b) Agencies must provide the training described in § 1220.34(f) of this subchapter and inform all employees that they are responsible and accountable for keeping accurate and complete records of their activities.

### § 1222.26 What are the general recordkeeping requirements for agency programs?

To ensure the adequate and proper documentation of agency programs, each program must develop recordkeeping requirements that identify:

(a) The record series and systems that must be created and maintained to document program policies, procedures, functions, activities, and transactions;

(b) The office responsible for maintaining the record copies of those series and systems, and the applicable system administrator responsible for ensuring authenticity, protection, and ready retrieval of electronic records;

(c) Related records series and systems;

(d) The relationship between paper and electronic files in the same series; and

(e) Policies, procedures, and strategies for ensuring that records are retained long enough to meet programmatic, administrative, fiscal, legal, and historical needs as authorized in a NARA-approved disposition schedule.

### § 1222.28 What are the series level recordkeeping requirements?

To ensure that record series and systems adequately document agency policies, transactions, and activities, each program must develop recordkeeping requirements for records series and systems that include:

(a) Identification of information and documentation that must be included in the series and/or system;

(b) Arrangement of each series and the records within the series and/or system;

(c) Identification of the location of the records and the staff responsible for maintaining the records;

(d) Policies and procedures for maintaining the documentation of phone calls, meetings, instant messages, and electronic mail exchanges that include substantive information about agency policies and activities;

(e) Policies and procedures for identifying working files and for determining

the record status of working files in paper and electronic form; and

(f) Policies and procedures for maintaining series consisting of different media.

### § 1222.30 When must agencies comply with the recordkeeping requirements of other agencies?

Agencies must comply with recordkeeping requirements that are imposed government-wide by another agency with jurisdiction over the program or activity being conducted, e.g., requirements for records concerning hazardous waste. Affected agencies must include these requirements in appropriate directives or other official issuances prescribing the agency's organization, functions, or activities.

### § 1222.32 How do agencies manage records created or received by contractors?

(a) Agency officials responsible for administering contracts must safeguard records created, processed, or in the possession of a contractor or a non-Federal entity by taking the following steps:

(1) Agencies must ensure that contractors performing Federal government agency functions create and maintain records that document these activities. Agencies must specify in the contract Government ownership and the delivery to the Government of all records necessary for the adequate and proper documentation of contractor-operated agency activities and programs in accordance with requirements of the Federal Acquisition Regulation (FAR) (Office of Federal Procurement Policy Act of 1974 (Pub. L. 93–400), as amended by Pub. L. 96–83 41 U.S.C.), and, where applicable, the Defense Federal Acquisition Regulation Supplement (DFARS) (48 CFR parts 200–299).

(2) Records management oversight of contract records is necessary to ensure that all recordkeeping needs are met. All records created for Government use and delivered to, or under the legal control of, the Government must be managed in accordance with Federal law. In addition, electronic records and background electronic data specified for delivery to the contracting agency must be accompanied by sufficient technical documentation to permit understanding and use of the records and data.

(3) Contracts that require the creation of data for the Government's use must specify, in addition to the final product, delivery of background supporting data or other records that may have reuse value to the Government. To determine what background supporting data or other records that contractors must deliver, program and contracting officials must consult with agency records and information managers and historians and, when appropriate, with other Government agencies to ensure that all Government needs are met, especially when the data deliverables support a new agency mission or a new Government program.

(4) Deferred ordering and delivery-of-data clauses and rights-in-data clauses must be included in contracts whenever necessary to ensure adequate and proper documentation or because the data have reuse value to the Government.

(b) All data created for Government use and delivered to, or falling under the legal control of, the Government are Federal records subject to the provisions of 44 U.S.C. chapters 21, 29, 31, and 33, the Freedom of Information Act (FOIA) (5 U.S.C. 552), as amended, and the Privacy Act of 1974 (5 U.S.C. 552a), as amended, and must be managed and scheduled for disposition only as provided in Subchapter B.

(c) Agencies must ensure that appropriate authority for retention of classified materials has been granted to contractors or non-Government entities participating in the National Industrial Security Program (NISP), established under Executive order 12829, as amended, or a successor Order.

### § 1222.34 How must agencies maintain records?

Agencies must implement a records maintenance program so that complete records are filed or otherwise identified and preserved, records can be readily found when needed, and permanent and temporary records are physically segregated from each other or, for electronic records, segregable. Agency records maintenance programs must:

(a) Institute procedures for organizing and storing records;

(b) Maintain electronic, audiovisual and cartographic, and microform records in accordance with 36 CFR parts 1236, 1237, and 1238 of this subchapter, respectively;

(c) Assign responsibilities for maintenance of records in all formats within each agency component, including designation of the officials that are responsible for maintenance and disposition of electronic records and management of automated systems used for recordkeeping;

(d) Institute reference and retrieval procedures and controls that:

(1) Facilitate the finding, charging out, and refiling of records, including safeguards against loss during transit; and

(2) Ensure that access to electronic records minimizes the risk of unauthorized additions, deletions, or alterations;

(e) Issue appropriate instructions to all agency employees on handling and protecting records;

(f) Maintain records and nonrecord materials separately, in accordance with § 1222.16;

(g) Maintain personal files separately from records in accordance with § 1222.20; and

(h) Comply with 36 CFR parts 1232 and 1234 of this subchapter when storing records in a records facility.

# PART 1223—MANAGING VITAL RECORDS

Sec.

1223.1 What are the authorities for Part 1223?
1223.2 What definitions apply to this part?
1223.3 What standards are used as guidance for Part 1223?
1223.4 What publications are incorporated by reference in this part?
1223.10 What is the purpose of Part 1223?
1223.12 What are the objectives of a vital records program?
1223.14 What elements must a vital records program include?
1223.16 How are vital records identified?
1223.18 Must vital records be in a particular form or format?
1223.20 What are the requirements for accessing vital records during an emergency?
1223.22 How must agencies protect vital records?
1223.24 When can vital records be destroyed?

AUTHORITY: 44 U.S.C. 3101; E.O. 12656, 53 FR 47491; E.O. 13231, 66 FR 53063.

SOURCE: 74 FR 51014, Oct. 2, 2009, unless otherwise noted.

## § 1223.1 What are the authorities for Part 1223?

(a) The authorities for this part are 44 U.S.C. 3101; Executive Orders 12656, Assignment of Emergency Preparedness Responsibilities, and 13231, Critical Infrastructure Protection in the Information Age; and National Security Presidential Directive (NSPD 51)/Homeland Security Presidential Directive (HSPD–20) or applicable successor directives. These authorities require the head of each agency to make and preserve records that contain adequate and proper documentation of the organization and to perform national security emergency preparedness functions.

(b) These regulations are in conformance with guidance provided in Federal Continuity Directive (FCD) 1, Federal Executive Branch National Continuity Program and Requirements, and FCD 2, Federal Executive Branch Mission Essential Function and Primary Mission Essential Function Identification and Submission Process.

## § 1223.2 What definitions apply to this part?

(a) See § 1220.18 of this subchapter for definitions of terms used throughout Subchapter B, including part 1223.

(b) As used in part 1223—

*Cycle* means the periodic removal of obsolete copies of vital records and their replacement with copies of current vital records. This may occur daily, weekly, quarterly, annually or at other designated intervals.

*Disaster* means an unexpected occurrence inflicting widespread destruction and distress and having long-term adverse effects on agency operations. Each agency defines what a long-term adverse effect is in relation to its most critical program activities.

*Emergency* means a situation or an occurrence of a serious nature, developing suddenly and unexpectedly, and demanding immediate action. This is

generally of short duration, for example, an interruption of normal agency operations for a week or less. It may involve electrical failure or minor flooding caused by broken pipes.

*Emergency operating records* are those types of vital records essential to the continued functioning or reconstitution of an organization during and after an emergency. Included are emergency plans and directive(s), orders of succession, delegations of authority, staffing assignments, selected program records needed to continue the most critical agency operations, as well as related policy or procedural records that assist agency staff in conducting operations under emergency conditions and for resuming normal operations after an emergency.

*Legal and financial rights records* are that type of vital records essential to protect the legal and financial rights of the Government and of the individuals directly affected by its activities. Examples include accounts receivable records, social security records, payroll records, retirement records, and insurance records. These records were formerly defined as ''rights-and-interests'' records.

*National security emergency* means any occurrence, including natural disaster, military attack, technological emergency, or other emergency, that seriously degrades or threatens the national security of the United States, as defined in Executive Order 12656.

*Off-site storage* means a facility other than an agency's normal place of business where records are kept until eligible for final disposition. Vital records may be kept at off-site storage to ensure that they are not damaged or destroyed should an emergency occur in an agency's normal place of business.

*Vital records* means essential agency records that are needed to meet operational responsibilities under national security emergencies or other emergency conditions (emergency operating records) or to protect the legal and financial rights of the Government and those affected by Government activities (legal and financial rights records).

*Vital records program* means the policies, plans, and procedures developed and implemented and the resources needed to identify, use, and protect the essential records needed to meet operational responsibilities under national security emergencies or other emergency conditions or to protect the Government's rights or those of its citizens. This is a program element of an agency's emergency management function.

### § 1223.3 What standards are used as guidance for Part 1223?

These regulations conform with guidance provided in ISO 15489–1:2001. Paragraphs 4 (Benefits of records management), Paragraphs 7.1 (Principles of records management programmes) and 9.6 (Storage and handling) apply to vital records.

### § 1223.4 What publications are incorporated by reference in this part?

(a) Certain material is incorporated by reference into this part with the approval of the Director of the Federal Register under 5 U.S.C. 552(a) and 1 CFR part 51. To enforce any edition other than that specified in this section, NARA must publish notice of change in the FEDERAL REGISTER and the material must be available to the public. All approved material is available for inspection at the Office of the Federal Register. For information on the availability of this material at the Office of the Federal Register, call 202–741–6030 or go to *http://www.archives.gov/federal_register/code_of_federal_regulations/ibr_locations.html*.

(b) The material incorporated by reference is also available for inspection at NARA's Archives Library Information Center (NWCCA), Room 2380, 8601 Adelphi Road, College Park, MD 20740–6001, phone number (301) 837–3415, and is available from the sources listed below.

(c) The following Web publication is available on-line at *http://www.fema.gov/pdf/about/offices/fcd1.pdf*; it is published by the Department of Homeland Security (DHS), 245 Murray Lane, Washington, DC, 20528, phone number, (202) 245–2499.

(1) Federal Continuity Directive 1 (''FCD 1''): Federal Executive Branch National Continuity Program and Requirements, February 2008, IBR approved for § 1223.14.

(2) [Reserved]

### § 1223.10 What is the purpose of Part 1223?

Part 1223 specifies policies and procedures needed to establish a program to identify, protect, and manage vital records as part of an agency's continuity of operation plan designed to meet emergency management responsibilities.

### § 1223.12 What are the objectives of a vital records program?

A vital records program has two objectives:

(a) It provides an agency with the information it needs to conduct its business under other than normal operating conditions and to resume normal business afterward; and

(b) It enables agency officials to identify and protect the most important records dealing with the legal and financial rights of the agency and of persons directly affected by the agency's actions.

### § 1223.14 What elements must a vital records program include?

To achieve compliance with this section, an agency's vital records program must contain all elements listed in FCD 1, Annex I (incorporated by reference, see § 1223.4). In carrying out a vital records program, agencies must:

(a) Specify agency staff responsibilities;

(b) Appropriately inform all staff about vital records;

(c) Ensure that the designation of vital records is current and complete; and

(d) Ensure that vital records are adequately protected, accessible, and immediately usable.

### § 1223.16 How are vital records identified?

Agencies identify vital records in the context of the emergency management function. Vital records are those that are needed to perform the most critical functions of the agency and those needed to protect legal and financial rights of the Government and of the persons affected by its actions. Vital records also include emergency plans and related records that specify how an agency will respond to an emergency. The informational content of records series and electronic records systems determines which are vital records. Only the most recent and complete sources of the information are vital records.

### § 1223.18 Must vital records be in a particular form or format?

(a) Vital records can be original records or copies of records. Consult NARA records management guidance on vital records at *http://www.archives.gov/records-mgmt/vital-records/index.html* for further information.

(b) Records may be maintained on a variety of media including paper, magnetic tape, optical disk, photographic film, and microform. In selecting the media, agencies must ensure that equipment needed to read the specific media will be available following an emergency or disaster.

### § 1223.20 What are the requirements for accessing vital records during an emergency?

Agencies must establish retrieval procedures for vital records that are easily implemented, especially since individuals unfamiliar with the records may need to use them in an emergency. For electronic records systems, agencies must also ensure that appropriate hardware, software, and system documentation adequate to operate the system and access the records will be available in case of an emergency.

### § 1223.22 How must agencies protect vital records?

Agencies must take appropriate measures to ensure the survival of the vital records or copies of vital records in case of an emergency.

(a) *Duplication.* Agencies may choose to duplicate vital records as the primary protection method. Duplication can be to the same medium as the original record or to a different medium. When agencies choose duplication as a protection method, the copy of the vital record stored off-site is normally a duplicate of the original record. The agency may store the original records off-site if their protection is necessary, or if it does not need to keep the original records at its normal place of business.

(b) *Dispersal.* Once records are duplicated, they must be dispersed to sites a sufficient distance away to avoid being subject to the same emergency. Dispersal sites may be other office locations of the same agency or some other site.

(c) *Storage considerations.* Copies of emergency operating vital records must be accessible in a very short period of time for use in the event of an emergency. Copies of legal and financial rights records may not be needed as quickly. In deciding where to store vital record copies, agencies must treat records that have the properties of both categories, that is, emergency operating and legal and financial rights records, as emergency operating records.

(1) The off-site copy of legal and financial rights vital records may be stored at an off-site agency location or, in accordance with § 1233.12 of this subchapter, at a records storage facility.

(2) When using a NARA records storage facility for storing vital records that are duplicate copies of original records, the agency must specify on the SF 135, Records Transmittal and Receipt, that they are vital records (duplicate copies) and the medium on which they are maintained. The agency must also periodically cycle (update) them by removing obsolete items and replacing them with the most recent version.

### § 1223.24 When can vital records be destroyed?

The disposition of vital records that are original records is governed by records schedules approved by NARA (see part 1225, Scheduling Records, of this subchapter). Agencies must not destroy original records that are not scheduled. Duplicate copies created and maintained for vital records purposes only may be destroyed when superseded or obsolete during the routine vital records cycle process.

## PART 1224—RECORDS DISPOSITION PROGRAMS

Sec.

1224.1 What are the authorities for Part 1224?
1224.2 What definitions apply to this part?
1224.3 What standards are used as guidance for this part?
1224.10 What must agencies do to implement an effective records disposition program?

AUTHORITY: 44 U.S.C. 2111, 2904, 3102, and 3301.

SOURCE: 74 FR 51014, Oct. 2, 2009, unless otherwise noted.

### § 1224.1 What are the authorities for Part 1224?

The statutory authorities for this part are 44 U.S.C. 2111, 2904, 3102, and 3301.

### § 1224.2 What definitions apply to this part?

See § 1220.18 of this subchapter for definitions of terms used in part 1224.

### § 1224.3 What standards are used as guidance for this part?

These regulations conform with guidance provided in ISO 15489–1:2001, Information and documentation—Records management. Paragraphs 7.1 (Principles of records management programmes), 8.3.7 (Retention and disposition), 8.5 (Discontinuing records systems), and 9.9 (Implementing disposition) apply to records disposition.

### § 1224.10 What must agencies do to implement an effective records disposition program?

In order to properly implement the provisions of §§ 1220.30(c)(2), 1220.32(e), and 1220.34(c), (f), and (g) of this subchapter agencies must:

(a) Ensure that all records are scheduled in accordance with part 1225 of this subchapter, schedules are implemented in accordance with part 1226 of this subchapter, and permanent records are transferred to the National Archives of the United States.

(b) Promptly disseminate and implement NARA-approved agency schedules and additions and changes to the General Records Schedules (GRS) in accordance with § 1226.12(a) of this subchapter.

(c) Regularly review agency-generated schedules, and, if necessary, update them.

(d) Incorporate records retention and disposition functionality during the design, development, and implementation

of new or revised recordkeeping systems (whether paper or electronic). See § 1236.6 of this subchapter.

(e) Provide training and guidance to all employees on agency records disposition requirements and procedures and other significant aspects of the records disposition program. When a new or revised records schedule is issued, provide specific guidance to employees responsible for applying the schedule.

## PART 1225—SCHEDULING RECORDS

Sec.

1225.1 What are the authorities for this part?
1225.2 What definitions apply to this part?
1225.3 What standards are used as guidance for this part?
1225.10 What Federal records must be scheduled?
1225.12 How are records schedules developed?
1225.14 How do agencies schedule permanent records?
1225.16 How do agencies schedule temporary records?
1225.18 How do agencies request records disposition authority?
1225.20 When do agencies have to get GAO approval for schedules?
1225.22 When must scheduled records be rescheduled?
1225.24 When can an agency apply previously approved schedules to electronic records?
1225.26 How do agencies change a disposition authority?

AUTHORITY: 44 U.S.C. 2111, 2904, 2905, 3102, and Chapter 33.

SOURCE: 74 FR 51014, Oct. 2, 2009, unless otherwise noted.

### § 1225.1 What are the authorities for this part?

The statutory authorities for this part are 44 U.S.C. 2111, 2904, 2905, 3102, and Chapter 33.

### § 1225.2 What definitions apply to this part?

See § 1220.18 of this subchapter for definitions of terms used throughout Subchapter B, including part 1225.

### § 1225.3 What standards are used as guidance for this part?

These regulations conform with guidance provided in ISO 15489–1:2001, Information and documentation—Records management. Paragraphs 4 (Benefits of records management), 6.3 (Responsibilities), 7.1 (Principles of records management programmes), 8.3.7 (Retention and disposition), 9.2 (Determining how long to retain records), 9.10 (Documenting records management processes), 10 (Records management processes and controls), and 11 (Monitoring and auditing) apply to records scheduling.

### § 1225.10 What Federal records must be scheduled?

All Federal records, including those created or maintained for the Government by a contractor, must be covered by a NARA-approved agency disposition authority, SF 115, Request for Records Disposition Authority, or the NARA General Records Schedules.

### § 1225.12 How are records schedules developed?

The principal steps in developing agency records schedules are listed below. Additional details that may be helpful are provided in the NARA records management handbook, *Disposition of Federal Records* at *http://www.archives.gov/records-mgmt/publications/disposition-of-federal-records/index.html*.

(a) Conduct a functional or work process analysis to identify the functions or activities performed by each organization or unit. Identify the recordkeeping requirements for each.

(b) Prepare an inventory for each function or activity to identify records series, systems, and nonrecord materials.

(c) Determine the appropriate scope of the records schedule items, e.g., individual series/system component, work process, group of related work processes, or broad program area.

(d) Evaluate the period of time the agency needs each records series or system based on use, value to agency operations and oversight agencies, and legal obligations. Determine whether a fixed or flexible retention period is more appropriate. For records proposed

as temporary, specify a retention period that meets agency business needs and legal requirements. For records proposed as permanent records, identify how long the records are needed by the agency before they are transferred to NARA.

(e) Determine whether the proposed disposition should be limited to records in a specific medium. Records schedules submitted to NARA for approval on or after December 17, 2007, are media neutral, *i.e.*, the disposition instructions apply to the described records in any medium, unless the schedule identifies a specific medium for a specific series.

(f) Compile a schedule for records, including descriptions and disposition instructions for each item, using an SF 115.

(g) Obtain internal clearances, as appropriate, from program offices and other stakeholders such as the legal counsel, chief information officer, electronic systems manager, and agency historian, as appropriate.

(h) Obtain approval from the Government Accountability Office (GAO), when required (see § 1225.20(a) for the categories that require GAO approval).

(i) Submit an SF 115 covering only new or revised record items to NARA for approval (see § 1225.18(d)).

(j) The disposition instructions on SF 115s approved by the Archivist of the United States are mandatory (44 U.S.C. 3314).

### § 1225.14 How do agencies schedule permanent records?

(a) *Identification*. Identify potentially permanent records. Useful guidelines in the identification of permanent Federal records may be found in the NARA records management handbook, *Disposition of Federal Records* (see § 1225.12 for the Web site address of this publication).

(b) *Requirements*. Each item proposed for permanent retention on an SF 115 must include the following:

(1) Descriptive title of the records series, component of an information system, or appropriate aggregation of series and/or information system components. The descriptive title must be meaningful to agency personnel;

(2) Complete description of the records including:

(i) Agency function;

(ii) Physical type, if appropriate;

(iii) Inclusive dates;

(iv) Statement of how records are arranged;

(v) Statement of restrictions on access under the FOIA if the records are proposed for immediate transfer;

(3) Disposition instructions developed using the following guidelines:

(i) If the records series or system is current and continuing, the SF 115 must specify the period of time after which the records will be transferred to the National Archives of the United States, and if appropriate, the time period for returning inactive records to an approved records storage facility.

(ii) If the records series or system is nonrecurring, i.e., no additional records will be created or acquired, the agency must propose either that the records be transferred to the National Archives of the United States immediately or set transfer for a fixed date in the future.

(c) *Determination*. NARA will appraise the records to determine if they have sufficient value to warrant archival permanent preservation. If NARA determines either that records are not permanent or that the transfer instructions are not appropriate:

(1) NARA will notify the agency and negotiate an appropriate disposition. The disposition instruction on the SF 115 will be modified prior to NARA approval; or

(2) If NARA and the agency cannot agree on the disposition instruction for an item(s), the items(s) will be withdrawn. In these cases, the agency must submit an SF 115 with a revised proposal for disposition; unscheduled records must be treated as permanent until a new schedule is approved.

### § 1225.16 How do agencies schedule temporary records?

(a) *Identification*. Federal agencies request authority to dispose of records, either immediately or on a recurring basis. Requests for immediate disposal are limited to existing records that no longer accumulate. For recurring records, approved schedules provide continuing authority to destroy the

records. The retention periods approved by NARA are mandatory, and the agency must dispose of the records after expiration of the retention period, except as provided in §§ 1226.18 and 1226.20 of this subchapter.

(b) *Requirements*. Each item on an SF 115 proposed for eventual destruction must include the following:

(1) Descriptive title familiar to agency personnel;

(2) Description of the records including agency function, physical type(s) and informational content;

(3) Disposition instructions developed using the following guidelines:

(i) If the record series, component of an electronic information system, or appropriate aggregation of series and/or automated system components is current and continuing, the SF 115 must include file breaks, retention period or event after which the records will be destroyed, and, if appropriate, transfer period for retiring inactive records to an approved records storage facility.

(ii) If the records series, system, or other aggregation is nonrecurring, *i.e.*, no additional records will be created or acquired, the SF 115 must specify either immediate destruction or destruction on a future date.

(c) *Determination*. If NARA determines that the proposed disposition is not consistent with the value of the records, it will request that the agency make appropriate changes.

(1) If NARA determines that records proposed as temporary merit permanent retention and transfer to the National Archives of the United States, the agency must change the disposition instruction prior to approval of the SF 115.

(2) If NARA and the agency cannot agree on the retention period for an item(s), the items(s) will be withdrawn. In these cases, the agency must submit an SF 115 with a revised proposal for disposition; unscheduled records must be treated as permanent until a new schedule is approved.

### § 1225.18 How do agencies request records disposition authority?

(a) Federal agencies submit an SF 115 to NARA to request authority to schedule (establish the disposition for) permanent and temporary records, either on a recurring or one-time basis.

(b) SF 115s include only records not covered by the General Records Schedules (GRS) (see part 1227 of this subchapter), deviations from the GRS (see § 1227.12 of this subchapter), or previously scheduled records requiring changes in retention periods or substantive changes in description.

(c) SF 115s do not include nonrecord material. The disposition of nonrecord materials is determined by agencies and does not require NARA approval.

(d) The following elements are required on a SF 115:

(1) Title and description of the records covered by each item.

(2) Disposition instructions that can be readily applied. Records schedules must provide for:

(i) The destruction of records that no longer have sufficient value to justify further retention (see § 1224.10(b) of this subchapter); and

(ii) The identification of potentially permanent records and provisions for their transfer to the legal custody of NARA.

(3) Certification that the records proposed for disposition are not now needed for the business of the agency or will not be needed after the specified retention periods. The signature of the authorized agency representative on the SF 115 provides certification.

(e) NARA will return SF 115s that are improperly prepared. The agency must make the necessary corrections and resubmit the form to NARA.

### § 1225.20 When do agencies have to get GAO approval for schedules?

(a), Federal agencies must obtain the approval of the Comptroller General for the disposal of the following types of records:

(1) Program records less than 3 years old,

(2) Deviations from General Records Schedule 2–10 (see § 1227.10 of this subchapter for a definition of general records schedules), and

(b) This approval must be obtained before NARA will approve the disposition request.

### § 1225.22 When must scheduled records be rescheduled?

Agencies must submit an SF 115, Request for Records Disposition Authority, to NARA in the following situations:

(a) If an interagency reorganization reassigns functions to an existing department or agency, the gaining organization must submit an SF 115 to NARA within one year of the reorganization. Schedules approved for one department or independent agency do not apply to records of other departments or agencies.

(b) If a new department or agency assumes functions from an existing one, the new agency must schedule records documenting the acquired functions and all other records not covered by the GRS within two years.

(c) If an agency needs to deviate from retention periods in the GRS.

(d) If an agency needs to change retention periods for records previously appraised as temporary by NARA.

(e) If an agency needs to change the approved disposition of records from permanent to temporary or vice versa.

(f) If an agency needs to modify the description of records because the informational content of the records and/or the function documented by the records changes.

(g) If an agency decides to change the scope of the records schedule items to include a greater or lesser aggregation of records (see § 1225.12(c)), unless § 1225.24 applies.

(h) Agencies must submit a new schedule to NARA for electronic versions of previously scheduled records if:

(1) The content and function of the records have changed significantly (e.g., the electronic records contain information that is substantially different from the information included in the hard copy series or are used for different purposes).

(2) The previously approved schedule explicitly excludes electronic records.

(3) The electronic records consist of program records maintained on an agency Web site.

(4) The electronic records consist of temporary program records maintained in a format other than scanned image AND the previously approved schedule is not media neutral.

### § 1225.24 When can an agency apply previously approved schedules to electronic records?

If the conditions specified in § 1225.22(h) do not apply, the following conditions apply:

(a) *Permanent records.*

(1) The agency may apply a previously approved schedule for hard copy records to electronic versions of the permanent records when the electronic records system replaces a single series of hard copy permanent records or the electronic records consist of information drawn from multiple previously scheduled permanent series. Agencies must notify the National Archives and Records Administration, Modern Records Programs (NWM), 8601 Adelphi Road, College Park, MD 20740–6001, phone number 301–837–1738, in writing of series of records that have been previously scheduled as permanent in hard copy form, including special media records as described in 36 CFR 1235.52 of this subchapter. An agency should send the notification to the NARA unit that processes its schedules. The notification must be submitted within 90 days of when the electronic recordkeeping system becomes operational and must contain the:

(i) Name of agency;

(ii) Name of the electronic system;

(iii) Organizational unit(s) or agency program that records support;

(iv) Current disposition authority reference; and

(v) Format of the records (e.g., database, scanned images, digital photographs, *etc.*).

(2) If the electronic records include information drawn from both temporary and permanent hard copy series, an agency either may apply a previously approved permanent disposition authority, after submitting the notification required by paragraph (a)(1) of this section or may submit a new schedule if the agency believes the electronic records do not warrant permanent retention.

(b) *Temporary still pictures, sound recordings, motion picture film, and video recordings.* The agency must apply the

previously approved schedule to digital versions. If changes in the approved schedule are required, follow §1225.26.

(c) *Scanned images of temporary records, including temporary program records*. The agency must apply the previously approved schedule. If changes in the approved schedule are required, follow §1225.26.

(d) *Other temporary records maintained in an electronic format other than scanned images*.

(1) For temporary records that are covered by an item in a General Records Schedule (other than those General Records Schedule items that exclude electronic master files and databases) or an agency-specific schedule that pertains to administrative housekeeping activities, apply the previously approved schedule. If the electronic records consist of information drawn from multiple hard copy series, apply the previously approved schedule item with the longest retention period.

(2) For temporary program records covered by a NARA-approved media neutral schedule item (*i.e.*, the item appears on a schedule submitted to NARA for approval before December 17, 2007, that is explicitly stated to be media neutral, or it appears on a schedule submitted to NARA for approval on or after December 17, 2007, that is not explicitly limited to a specific recordkeeping medium), apply the previously approved schedule.

### §1225.26 How do agencies change a disposition authority?

Agencies must submit an SF 115 to permanently change the approved disposition of records. Disposition authorities are automatically superseded by approval of a later SF 115 for the same records unless the later SF 115 specifies an effective date. As provided in §1226.20(c) of this subchapter, agencies are authorized to retain records eligible for destruction until the new schedule is approved.

(a) SF 115s that revise previously approved disposition authorities must cite all of the following, if applicable:

(1) The SF 115 and item numbers to be superseded;

(2) The General Records Schedules and item numbers that cover the records, if any; and

(3) The current published records disposition manual and item numbers; or the General Records Schedules and item numbers that cover the records.

(b) Agencies must submit with the SF 115 an explanation and justification for the change.

(c) For temporary retention of records beyond their normal retention period, see §1226.18 of this subchapter.

(d) Agencies must secure NARA approval of a change in the period of time that permanent records will remain in agency legal custody prior to transfer to the National Archives of the United States. To request approval, agencies send written requests to the National Archives and Records Administration, Modern Records Programs (NWM), 8601 Adelphi Road, College Park, MD 20740–6001, phone number (301) 837–1738. NARA approval is documented as an annotation to the schedule item. A new SF 115 is not required to extend the time period of agency legal custody.

## PART 1226—IMPLEMENTING DISPOSITION

Sec.

1226.1 What are the general authorities for this part?
1226.2 What definitions apply to this part?
1226.3 What standards are used as guidance for this part?
1226.10 Must agencies apply approved schedules to their records?
1226.12 How do agencies disseminate approved schedules?
1226.14 What are the limitations in applying approved records schedule?
1226.16 Does NARA ever withdraw disposition authority?
1226.18 When may agencies temporarily extend retention periods?
1226.20 How do agencies temporarily extend retention periods?
1226.22 When must agencies transfer permanent records?
1226.24 How must agencies destroy temporary records?
1226.26 How do agencies donate temporary records?

AUTHORITY: 44 U.S.C. 2111, 2904, 3102, and 3301.

SOURCE: 74 FR 51014, Oct. 2, 2009, unless otherwise noted.

### § 1226.1 What are the general authorities for this part?

The statutory authorities are 44 U.S.C. 2107, 2111, 2904, 3102, 3301 and 3302.

### § 1226.2 What definitions apply to this part?

See § 1220.18 of this subchapter for definitions of terms used throughout Subchapter B, including part 1226.

### § 1226.3 What standards are used as guidance for this part?

These regulations conform with guidance in ISO 15489–1:2001, Information and documentation—Records management, sections 8.3.7 (Retention and disposition), 8.5 (Discontinuing records systems), 9.2 (Determining how long to retain records), and 9.9 (Implementing disposition).

### § 1226.10 Must agencies apply approved schedules to their records?

The application of approved schedules is mandatory except as provided in §§ 1226.16 and 1226.18. Federal records must be retained as specified in the schedule to conduct Government business, protect rights, avoid waste, and preserve permanent records for transfer to the National Archives of the United States.

### § 1226.12 How do agencies disseminate approved schedules?

(a) Agencies must issue disposition authorities through their internal directives system within six months of approval of the SF 115 or GRS to ensure proper distribution and application of the schedule. The directive must cite the legal authority (GRS or SF 115 and item numbers) for each schedule item covering records.

(b) Agencies must send, via link or file, an electronic copy of each published agency schedule, directive, and other policy issuance relating to records disposition to NARA at *RM.Communications@nara.gov* when the directive, manual, or policy issuance is posted or distributed.

(c) The submission must include the name, title, agency, address, and phone number of the submitter. If the comprehensive records schedule or other policy issuance is posted on a publicly available Web site, the agency must provide the full Internet address (URL).

### § 1226.14 What are the limitations in applying approved records schedules?

Agencies must apply the approved records disposition schedules to their agency's records as follows

(a) Records described by items marked ''disposition not approved'' or ''withdrawn'' may not be destroyed until a specific disposition has been approved by NARA.

(b) Disposition authorities for items on approved SF 115s that specify an organizational component of the department or independent agency as the creator or custodian of the records may be applied to the same records after internal reorganization, but only if the nature, content, and functional importance of the records remain the same. Authority approved for items described in a functional format may be applied to any organizational component within the department or independent agency that is responsible for the relevant function.

(c) Disposition authorities approved for one department or independent agency may not be applied to records of another department or agency. Departments or agencies that acquire records from another department or agency, and/or continue creating the same series of records previously created by another department or agency through interagency reorganization must promptly submit an SF 115 to NARA for disposition authorization. Until the new records schedule is approved, the records are unscheduled. See § 1225.22 of this subchapter.

(d) Unless otherwise specified, newly approved disposition authorities apply retroactively to all existing records as described in the schedule.

(e) When required by court order (*i.e.*, order for expungement or destruction), an agency may destroy temporary records before their NARA-authorized disposition date. In accordance with § 1230.14 of this subchapter, an agency must notify the National Archives and Records Administration, Modern Records Programs (NWM), 8601 Adelphi Road, College Park, MD 20740–6001,

phone number (301) 837–1738, when permanent or unscheduled records are to be destroyed in response to a court order. If the records have significant historical value, NARA will promptly advise the agency of any concerns over their destruction.

### § 1226.16 Does NARA ever withdraw disposition authority?

(a) When required to ensure the preservation of Government records, or when required by an emergency, or to maintain efficiency of Government operations, NARA will withdraw disposal authorizations in approved schedules (44 U.S.C. 2909). This withdrawal may apply to particular items on agency schedules or may apply to all existing authorizations for a specified type of record in any or all agencies.

(b) To both impose and rescind the withdrawal, NARA will notify the affected agency or agencies in writing, either by letter or NARA bulletin.

### § 1226.18 When may agencies temporarily extend retention periods?

(a) Agencies may temporarily retain records approved for destruction beyond their NARA-approved retention period if special circumstances alter the normal administrative, legal, or fiscal value of the records.

(1) Agencies must not retain records whose disposal after a specified period is required by statute, unless retention is ordered by a Court.

(2) In determining whether or not to temporarily extend the retention period of records, agencies must ensure that the extension of retention is consistent with the requirement contained in 5 U.S.C. 552a (Privacy Act of 1974, as amended) that records concerning individuals are maintained only if relevant and necessary to accomplish a purpose of the agency that is required by law or Executive order.

(b) If the records that are to be temporarily retained beyond their approved destruction date have been transferred to records storage facilities, agencies must notify the facility.

(c) Once the special circumstances that require extended retention of records have elapsed, agencies must destroy the records in accordance with the NARA-approved disposition instructions.

(d) Agencies must submit an SF 115 to NARA to change schedule provisions on a continuing basis in accordance with § 1225.26 of this subchapter. Agencies may retain records eligible for destruction until the new schedule is approved.

### § 1226.20 How do agencies temporarily extend retention periods?

(a) Agencies must secure NARA written approval to retain records series or systems that are eligible for destruction under NARA-approved schedules except when:

(1) The agency has requested a change in the records schedule in accordance with § 1225.26 of this subchapter, in which case the agency is authorized to retain records eligible for destruction until the new SF 115 is approved;

(2) The records will be needed for less than one year; or

(3) A court order requires retention of the records.

(b) To request an extension, agencies must send a letter to the National Archives and Records Administration, Modern Records Programs (NWM), 8601 Adelphi Road, College Park, MD 20740–6001, phone number (301) 837–1738. Along with a justification, the request must include:

(1) A concise description of the records series for which the extension is requested.

(2) A citation to the agency records schedule or the GRS currently governing disposition of the records;

(3) A statement of the estimated period of time that the records will be required; and

(4) For records in the agency's custody, a statement of the current and proposed physical location of the records.

(c) Agencies must ensure that records in records storage facilities are retained for the duration of the extension.

### § 1226.22 When must agencies transfer permanent records?

All records scheduled as permanent must be transferred to the National Archives of the United States after the

period specified on the SF 115 in accordance with procedures specified under § 1235.12 of this subchapter.

### § 1226.24 How must agencies destroy temporary records?

(a) *Sale or salvage of unrestricted records*—(1) *Paper records*. Paper records to be destroyed normally must be sold as wastepaper, or otherwise salvaged. All sales must follow the established procedures for the sale of surplus personal property. (See 41 CFR part 101—45, Sale, Abandonment, or Destruction of Personal Property.) The contract for sale must prohibit the resale of all records for use as records or documents.

(2) *Records on electronic and other media*. Records other than paper records (audio, visual, and electronic records on physical media data tapes, disks, and diskettes) may be salvaged and sold in the same manner and under the same conditions as paper records.

(b) *Destruction of unrestricted records*. Unrestricted records that agencies cannot sell or otherwise salvage must be destroyed by burning, pulping, shredding, macerating, or other suitable means authorized by implementing regulations issued under E.O. 12958, as amended or its successor.

(c) *Destruction of classified or otherwise restricted records*. If the records are restricted because they are national security classified or exempted from disclosure by statute, including the Privacy Act, or regulation:

(1) *Paper records*. For paper records, the agency or its wastepaper contractor must definitively destroy the information contained in the records by one of the means specified in paragraph (b) of this section and their destruction must be witnessed either by a Federal employee or, if authorized by the agency, by a contractor employee.

(2) *Electronic records*. Electronic records scheduled for destruction must be disposed of in a manner that ensures protection of any sensitive, proprietary, or national security information. Magnetic recording media previously used for electronic records containing sensitive, proprietary, or national security information must not be reused if the previously recorded information can be compromised in any way by reuse of the media.

### § 1226.26 How do agencies donate temporary records?

(a) Agencies must obtain written approval from NARA before donating records eligible for disposal to an appropriate person, organization, institution, corporation, or government (including a foreign government) that has requested them. Records that are not eligible for disposal cannot be donated.

(b) Agencies request the approval of such a donation by sending a letter to the National Archives and Records Administration, Modern Records Programs (NWM), 8601 Adelphi Road, College Park, MD 20740–6001, phone number (301) 837–1738. The request must include:

(1) The name of the department or agency, and relevant subdivisions, having custody of the records;

(2) The name and address of the proposed recipient of the records;

(3) A list containing:

(i) Description of the records to be transferred,

(ii) The inclusive dates of the records,

(iii) The SF 115 or GRS and item numbers that authorize destruction of the records;

(4) A statement providing evidence:

(i) That the proposed donation is in the best interests of the Government,

(ii) That the proposed recipient agrees not to sell the records as records or documents, and

(iii) That the donation will be made without cost to the U.S. Government;

(5) A certification that:

(i) The records contain no information the disclosure of which is prohibited by law or contrary to the public interest, and/or

(ii) The records proposed for transfer to a person or commercial business are directly pertinent to the custody or operations of properties acquired from the Government, and/or

(iii) A foreign government desiring the records has an official interest in them.

(c) NARA will determine whether the donation is in the public interest and notify the requesting agency of its decision in writing. If NARA determines

such a proposed donation is contrary to the public interest, the agency must destroy the records in accordance with the appropriate disposition authority.

# PART 1227—GENERAL RECORDS SCHEDULES

Sec.
1227.1 What are the authorities for Part 1227?
1227.2 What definitions apply to this part?
1227.3 What standards are used as guidance for this part?
1227.10 What are General Records Schedules (GRS)?
1227.12 When must agencies apply the GRS?
1227.14 How do I obtain copies of the GRS?

AUTHORITY: 44 U.S.C. 3303a(d).

SOURCE: 74 FR 51014, Oct. 2, 2009, unless otherwise noted.

## § 1227.1 What are the authorities for Part 1227?

The statutory authority for this part is 44 U.S.C. 3303a(d).

## § 1227.2 What definitions apply to this part?

See § 1220.18 of this subchapter for definitions of terms used in part 1227.

## § 1227.3 What standards are used as guidance for this part?

These regulations conform with guidance provided in ISO 15489–1:2001, Information and documentation—Records management, paragraphs 9.2 (Determining how long to retain records) and 9.9 (Implementing disposition).

## § 1227.10 What are General Records Schedules (GRS)?

General Records Schedules (GRS) are schedules issued by the Archivist of the United States that authorize, after specified periods of time, the destruction of temporary records or the transfer to the National Archives of the United States of permanent records that are common to several or all agencies.

## § 1227.12 When must agencies apply the GRS?

(a) Agencies apply the disposition instructions of the GRS, as provided in the following table.

| When NARA issues a new or revised GRS, and . . . | Then . . . |
|---|---|
| (1) The new or revised GRS states that the provisions must be followed without exception. | All agencies must follow the disposition instructions of the GRS, regardless of whether or not they have existing schedules. |
| (2) Your agency does not have an existing schedule for these records.. | Your agency must follow the disposition instructions of the GRS. If your agency's needs require a different retention period, then your agency must submit an SF 115 in accordance with 36 CFR part 1225 of this subchapter, and a justification for the deviation. |
| (3) When your agency has an existing schedule and the new or revised GRS permits use of existing agency-specific schedules. | Your agency may follow the disposition instructions in either the GRS or the existing agency schedule, but it must follow the same instructions throughout the agency and instruct its staff to do so. If your agency chooses to follow its own schedule, then it must notify NARA within 120 days of the issuance of the new or revised GRS. |
| (4) Your agency does not create or maintain any of the records addressed by that GRS. | No action is required. |

(b) Except as provided in the table in paragraph (a), agencies must incorporate in their disposition manual or otherwise disseminate new and revised GRS within 6 months after NARA has issued the GRS Transmittal.

(c) NARA may, at its discretion, apply the provisions of the GRS to records in its legal custody, subject to the provisions of § 1235.34 of this subchapter.

## § 1227.14 How do I obtain copies of the GRS?

(a) The GRS and instructions for their use are available online at *http://www.archives.gov/records-mgmt/ardor/records-schedules.html*. They are also available by writing to the National Archives and Records Administration, Modern Records Programs (NWM), 8601 Adelphi Road, College Park, MD 20740–6001, phone number (301) 837–1738.

(b) NARA distributes new and revised GRS to Federal agencies under sequentially numbered GRS transmittals.

# PART 1228—LOAN OF PERMANENT AND UNSCHEDULED RECORDS

Sec.
1228.1 What are the authorities for this part?
1228.2 What definitions apply to this part?
1228.8 Do loans of temporary records require NARA approval?
1228.10 When do loans of permanent and unscheduled records require NARA approval?
1228.12 How do agencies obtain approval to loan permanent or unscheduled records?
1228.14 How will NARA handle a loan request?
1228.16 When must agencies retrieve records that have been loaned?

AUTHORITY: 44 U.S.C. 2904.

SOURCE: 74 FR 51014, Oct. 2, 2009, unless otherwise noted.

## § 1228.1 What are the authorities for this part?

The statutory authority for this part is 44 U.S.C. 2904.

## § 1228.2 What definitions apply to this part?

See § 1220.18 of this subchapter for definitions of terms used in part 1228.

## § 1228.8 Do loans of temporary records require NARA approval?

Loans of temporary records between Federal agencies or to non-Federal recipients do not require approval from NARA. The lending agency is responsible for documenting the loan and return of the records.

## § 1228.10 When do loans of permanent and unscheduled records require NARA approval?

Loans of permanent or unscheduled records between Federal agencies or to non-Federal recipients require prior written approval from NARA. The loan of permanent or unscheduled records increases the likelihood of the records becoming lost, misplaced, or incorporated into other files. Agencies should consider reproducing or scanning the records in response to a loan request.

## § 1228.12 How do agencies obtain approval to loan permanent or unscheduled records?

(a) An agency proposing to loan permanent or unscheduled records must prepare a written loan agreement with the proposed recipient. The agreement must include:

(1) The name of the department or agency and subdivisions having custody of the records;

(2) The name and address of the proposed recipient of the records;

(3) A list containing:

(i) Identification of the records to be loaned, by series or system;

(ii) The inclusive dates for each series or system;

(iii) The volume and media of the records to be loaned; and

(iv) The NARA disposition job (SF 115) and item numbers covering the records, if any.

(4) A statement of the purpose and duration of the loan;

(5) A statement specifying any restrictions on the use of the records and how these restrictions will be imposed by the recipient;

(6) A certification that the records will be stored in areas with security and environmental controls equal to those specified in part 1234 of this subchapter; and

(7) A signature block for the Archivist of the United States. The loan must not take place until the Archivist has signed the agreement.

(b) On request, NARA may allow an agency to prepare an annual loan agreement covering multiple transfers from the same series of records to another single Federal agency.

(c) The agency must send a written request to the National Archives and Records Administration, Modern Records Programs (NWM), 8601 Adelphi Road, College Park, MD 20740–6001, phone number (301) 837–1738, transmitting the proposed loan agreement, citing the rationale for not providing copies in place of the original records, and specifying the name, title, and phone number of an agency contact. The request must be submitted or approved by the individual authorized to sign records schedules as described in § 1220.34(b) of this subchapter.

### § 1228.14 How will NARA handle a loan request?

(a) NARA will review the request and, if it is approved, return the signed agreement to the agency within 30 days.

(b) NARA will deny the request within 30 days if the records are due or past due to be transferred to the National Archives of the United States in accordance with part 1235 of this subchapter, if the loan would endanger the records, or if the loan would otherwise violate the regulations in 36 CFR chapter XII, subchapter B. NARA will notify the agency in writing if it disapproves the loan and the reasons for the disapproval of the loan.

### § 1228.16 When must agencies retrieve records that have been loaned?

An agency must contact the recipient of loaned permanent or unscheduled records 30 days prior to the expiration of the loan period (as stated in the loan agreement) to arrange for the return of the records. If the agency extends the duration of the loan, it must notify NARA (see § 1228.12(b)) in writing, specifying the reason for the extension and providing the new expiration date of the loan.

## PART 1229—EMERGENCY AUTHORIZATION TO DESTROY RECORDS

Sec.

1229.1 What is the scope of this part?
1229.2 What are the authorities for this part?
1229.3 What definitions apply to this part?
1229.10 What steps must be taken when records are a continuing menace to health or life, or to property?
1229.12 What are the requirements during a state of war or threatened war?

AUTHORITY: 44 U.S.C. 3310 and 3311.

SOURCE: 74 FR 51014, Oct. 2, 2009, unless otherwise noted.

### § 1229.1 What is the scope of this part?

This part describes certain conditions under which records may be destroyed without regard to the provisions of part 1226 of this subchapter.

### § 1229.2 What are the authorities for this part?

The statutory authorities for this part are 44 U.S.C. 3310 and 3311.

### § 1229.3 What definitions apply to this part?

See § 1220.18 of this subchapter for definitions of terms used in part 1229.

### § 1229.10 What steps must be taken when records are a continuing menace to health or life, or to property?

When NARA and the agency that has custody of them jointly determine that records in the custody of an agency of the U.S. Government are a continuing menace to human health or life, or to property, NARA will authorize the agency to eliminate the menace immediately by any method necessary:

(a) When an agency identifies records that pose a continuing menace to human health or life, or to property, the records officer or other designee must immediately notify the National Archives and Records Administration, Modern Records Programs (NWM), 8601 Adelphi Road, College Park, MD 20740–6001, phone number (301) 837–1738. The notice must specify the description of the records, their location and quantity, and the nature of the menace. Notice may be given via e-mail to *RM.Communications@nara.gov*, or via phone, (301) 837–1738, or fax, (301) 837–3698, to NWM or the NARA Regional Administrator.

(b) If NARA concurs in a determination that the records must be destroyed, NARA will notify the agency to immediately destroy the records.

(c) If NARA does not concur that the menace must be eliminated by destruction of the records, NARA will advise the agency on remedial action to address the menace.

### § 1229.12 What are the requirements during a state of war or threatened war?

(a) Destruction of records outside the territorial limits of the continental United States is authorized whenever, during a state of war between the United States and any other nation or when hostile action appears imminent, the head of the agency that has custody of the records determines that

their retention would be prejudicial to the interest of the United States, or that they occupy space urgently needed for military purposes and are without sufficient administrative, fiscal, legal, historical, or other value to warrant their continued preservation.

(b) Within six months after the destruction of any records under this authorization, the agency official who directed the destruction must submit to the National Archives and Records Administration, Modern Records Programs (NWM), 8601 Adelphi Road, College Park, MD 20740–6001, phone number (301) 837–1738, a written statement explaining the reasons for the destruction and a description of the records and how, when, and where the destruction was accomplished.

# PART 1230—UNLAWFUL OR ACCIDENTAL REMOVAL, DEFACING, ALTERATION, OR DESTRUCTION OF RECORDS

Sec.

1230.1 What are the authorities for part 1230?
1230.2 What standards are used as guidance for this part?
1230.3 What definitions apply to this part?
1230.10 Who is responsible for preventing the unlawful or accidental removal, defacing, alteration, or destruction of records?
1230.12 What are the penalties for unlawful or accidental removal, defacing, alteration, or destruction of records?
1230.14 How do agencies report incidents?
1230.16 How does NARA handle allegations of damage, alienation, or unauthorized destruction of records?
1230.18 What assistance is available to agencies to recover unlawfully removed records?

AUTHORITY: 44 U.S.C. 3105 and 3106.

SOURCE: 74 FR 51014, Oct. 2, 2009, unless otherwise noted.

## § 1230.1 What are the authorities for part 1230?

The statutory authorities for this part are 44 U.S.C. 3105 and 3106.

## § 1230.2 What standards are used as guidance for this part?

These regulations conform with guidance provided in ISO 15489–1:2001, par. 6.3 (Responsibilities), 7.2 (Characteristics of a record), 8.2 (Records systems characteristics), and 8.3 (Designing and implementing records systems).

## § 1230.3 What definitions apply to this part?

(a) See § 1220.18 of this subchapter for definitions of terms used throughout Subchapter B, including part 1230.

(b) As used in part 1230—

*Alteration* means the unauthorized annotation, addition, or deletion to a record.

*Deface* means to obliterate, mar, or spoil the appearance or surface of a record that impairs the usefulness or value of the record.

*Removal* means selling, donating, loaning, transferring, stealing, or otherwise allowing a record to leave the custody of a Federal agency without the permission of the Archivist of the United States.

*Unlawful or accidental destruction (also called unauthorized destruction)* means disposal of an unscheduled or permanent record; disposal prior to the end of the NARA-approved retention period of a temporary record (other than court-ordered disposal under § 1226.14(d) of this subchapter); and disposal of a record subject to a FOIA request, litigation hold, or any other hold requirement to retain the records.

## § 1230.10 Who is responsible for preventing the unlawful or accidental removal, defacing, alteration, or destruction of records?

The heads of Federal agencies must:

(a) Prevent the unlawful or accidental removal, defacing, alteration, or destruction of records. Section 1222.24(a)(6) of this subchapter prohibits removing records from the legal custody of the agency. Records must not be destroyed except under the provisions of NARA-approved agency records schedules or the General Records Schedules issued by NARA;

(b) Take adequate measures to inform all employees and contractors of the provisions of the law relating to unauthorized destruction, removal, alteration or defacement of records;

(c) Implement and disseminate policies and procedures to ensure that records are protected against unlawful

or accidental removal, defacing, alteration and destruction; and

(d) Direct that any unauthorized removal, defacing, alteration or destruction be reported to NARA.

### § 1230.12 What are the penalties for unlawful or accidental removal, defacing, alteration, or destruction of records?

The penalties for the unlawful or accidental removal, defacing, alteration, or destruction of Federal records or the attempt to do so, include a fine, imprisonment, or both (18 U.S.C. 641 and 2071).

### § 1230.14 How do agencies report incidents?

The agency must report promptly any unlawful or accidental removal, defacing, alteration, or destruction of records in the custody of that agency to the National Archives and Records Administration, Modern Records Programs (NWM), 8601 Adelphi Road, College Park, MD 20740–6001, phone number 301–837–1738.

(a) The report must include:

(1) A complete description of the records with volume and dates if known;

(2) The office maintaining the records;

(3) A statement of the exact circumstances surrounding the removal, defacing, alteration, or destruction of records;

(4) A statement of the safeguards established to prevent further loss of documentation; and

(5) When appropriate, details of the actions taken to salvage, retrieve, or reconstruct the records.

(b) The report must be submitted or approved by the individual authorized to sign records schedules as described in § 1220.34(b) of this subchapter.

### § 1230.16 How does NARA handle allegations of unlawful or accidental removal, defacing, alteration, or destruction?

Upon receiving any credible information that records are at risk of actual, impending, or threatened damage, alienation, or unauthorized destruction, NARA will contact the agency as follows:

(a) If the threat has not yet resulted in damage, removal, or destruction, NARA will contact the agency by phone promptly and follow up in writing within five business days.

(b) If records have allegedly been damaged, removed, or destroyed, NARA will notify the agency in writing promptly with a request for a response within 30 days.

### § 1230.18 What assistance is available to agencies to recover unlawfully removed records?

NARA will assist the head of the agency in the recovery of any unlawfully removed records, including contacting the Attorney General, if appropriate.

## PART 1231—TRANSFER OF RECORDS FROM THE CUSTODY OF ONE EXECUTIVE AGENCY TO ANOTHER

Sec.

1231.1 What is the authority for part 1231?
1231.2 What definitions apply to this part?
1231.10 Who has the authority to approve the transfer of records from the custody of one executive agency to another?
1231.12 How do executive agencies request to transfer records to another executive agency?
1231.14 May the records of terminated agencies be transferred to another agency?
1231.16 What restrictions are there on use of transferred records?
1231.18 When are records transferred between executive agencies without NARA approval?

AUTHORITY: 44 U.S.C. 2908.

SOURCE: 74 FR 51014, Oct. 2, 2009, unless otherwise noted.

### § 1231.1 What is the authority for part 1231?

The authority for this part is 44 U.S.C. 2908.

### § 1231.2 What definitions apply to this part?

See § 1220.18 of this subchapter for definitions of terms used throughout Subchapter B, including this part.

### § 1231.10 Who has the authority to approve the transfer of records from the custody of one executive agency to another?

NARA must approve in writing the transfer of records from the custody of one executive agency to another, except as provided in § 1231.18(a).

### § 1231.12 How do executive agencies request to transfer records to another executive agency?

An executive agency that proposes to transfer records to another agency must request approval of the transfer of records in writing from the National Archives and Records Administration, Modern Records Programs (NWM), 8601 Adelphi Road, College Park, MD 20740–6001, phone number (301) 837–1738. The request must include:

(a) A concise description of the records to be transferred, including the volume in cubic feet;

(b) A statement of the restrictions imposed on the use of records;

(c) A statement of the agencies and persons using the records and the purpose of this use;

(d) A statement of the current and proposed physical and organizational locations of the records;

(e) A justification for the transfer including an explanation of why it is in the best interests of the Government; and

(f) Copies of the concurrence in the transfer by the heads of all agencies involved in the proposed transfer.

### § 1231.14 May the records of terminated agencies be transferred to another agency?

The records of executive agencies whose functions are terminated or are in process of liquidation may be transferred to another executive agency that inherits the function. All such transfers must be made in accordance with the provisions of this part.

### § 1231.16 What restrictions are there on use of transferred records?

Restrictions imposed under a statute or Executive order must continue to be imposed after the transfer. Restrictions imposed by agency determination must also continue, unless the restrictions are removed by agreement between the agencies concerned.

### § 1231.18 When are records transferred between executive agencies without NARA approval?

Records are transferred between executive agencies without NARA approval when:

(a) Records are transferred to a NARA or agency-operated records center or to the National Archives of the United States in accordance with Parts 1232, 1233, and 1235 of this subchapter;

(b) Temporary records are loaned for official use;

(c) The transfer of records or functions or both is required by statute, Executive Order, Presidential reorganization plan, or Treaty, or by specific determinations made thereunder;

(d) The records are transferred between two components of the same executive department; or

(e) Records accessioned into the National Archives of the United States are later found to lack sufficient value for continued retention in the National Archives. The disposition of such records is governed by § 1235.34 of this subchapter.

## PART 1232—TRANSFER OF RECORDS TO RECORDS STORAGE FACILITIES

Sec.

1232.1 What are the authorities for part 1232?
1232.2 What definitions apply to this part?
1232.3 What standards are used as guidance for this part?
1232.10 Where can a Federal agency transfer records for storage?
1232.12 Under what conditions may Federal records be stored in records storage facilities?
1232.14 What requirements must an agency meet before it transfers records to a records storage facility?
1232.16 What documentation must an agency create before it transfers records to a records storage facility?
1232.18 What procedures must an agency follow to transfer records to an agency records center or commercial records storage facility?

AUTHORITY: 44 U.S.C. 2907 and 3103.

SOURCE: 74 FR 51014, Oct. 2, 2009, unless otherwise noted.

### § 1232.1 What are the authorities for part 1232?

The statutory authorities for this part are 44 U.S.C. 2907 and 3103.

### § 1232.2 What definitions apply to this part?

See § 1220.18 of this subchapter for definitions of terms used throughout Subchapter B, including part 1232.

### § 1232.3 What standards are used as guidance for this part?

These regulations conform with guidance provided in ISO 15489–1:2001 Paragraphs 7.1 (Principles of records management programmes), 8.3.3 (Physical storage medium and protection), 8.3.6 (Access, retrieval and use), 8.3.7 (Retention and disposition), 9.6 (Storage and handling), and 9.8.3 (Location and tracking) apply to records creation and maintenance.

### § 1232.10 Where can a Federal agency transfer records for storage?

Federal agencies may store records in the following types of records storage facilities, so long as the facilities meet the facility standards in 36 CFR part 1234. Records transferred to a records storage facility remain in the legal custody of the agency.

(a) NARA Federal Records Centers. NARA owns or operates records centers for the storage, processing, and servicing of records for Federal agencies under the authority of 44 U.S.C. 2907. These NARA records centers include a National Personnel Records Center that contains designated records of the Department of Defense and the Office of Personnel Management and other designated records pertaining to former Federal civilian employees. A list of NARA Federal Records Centers is available from the NARA Web site at *http://www.archives.gov/locations/index.html* and also in the U.S. Government Manual, which is for sale from the Superintendent of Documents, U.S. Government Printing Office, Mail Stop: SSOP, Washington, DC 20402–9328, and is available on the Internet from *http://www.access.gpo.gov/nara/index.html*.

(b) Records centers operated by or on behalf of one or more Federal agencies other than NARA.

(c) Commercial records storage facilities operated by private entities.

### § 1232.12 Under what conditions may Federal records be stored in records storage facilities?

The following chart shows what records can be stored in a records storage facility and the conditions that apply:

| Type of record | Conditions |
|---|---|
| (a) Permanent records | Any storage facility that meets the provisions of 36 CFR part 1234. |
| (b) Unscheduled records | (1) Any storage facility that meets the provisions of 36 CFR part 1234.<br>(2) Also requires prior notification to NARA (see § 1232.14(b)). |
| (c) Temporary records (excluding Civilian Personnel Records). | Any storage facility that meets the provisions of 36 CFR part 1234. |
| (d) Vital records | Storage facility must meet the provisions of 36 CFR parts 1223 and 1234. |
| (e) Civilian Personnel Records | May only be transferred to the National Personnel Records Center (NPRC), St. Louis, MO (see part 1233 of this subchapter). |

### § 1232.14 What requirements must an agency meet before it transfers records to a records storage facility?

An agency must meet the following requirements before it transfers records to a records storage facility:

(a) Ensure that the requirements of 36 CFR part 1234 are met. Special attention must be paid to ensuring appropriate storage conditions for records on non-paper based media (e.g., film, audio tape, magnetic tape), especially those that are scheduled for long-term or permanent retention, as those records typically require more stringent environmental controls (see 36 CFR parts 1236 and 1237).

(b) To transfer unscheduled records, notify the National Archives and Records Administration, Modern Records Programs (NWM), 8601 Adelphi Road, College Park, MD 20740–6001, phone number (301) 837–1738, in writing prior to the transfer. The notification

must identify the records storage facility and include a copy of the information required by § 1232.16(a).

(c) For all records being transferred, create documentation sufficient to identify and locate files. (See § 1232.16.)

(d) Ensure that NARA-approved retention periods are implemented properly and that records documenting final disposition actions (destruction or transfer to the National Archives of the United States) are created and maintained.

### § 1232.16 What documentation must an agency create before it transfers records to a records storage facility?

(a) Documentation must include for each individual records series spanning one or more consecutive years transferred to storage:

(1) Creating office;

(2) Series title;

(3) Description (in the case of permanent or unscheduled records, the description must include a folder title list of the box contents or equivalent detailed records description);

(4) Date span;

(5) Physical form and medium of records (e.g., paper, motion picture film, sound recordings, photographs, or digital images);

(6) Volume;

(7) Citation to NARA-approved records schedule or agency records disposition manual (unscheduled records must cite the date the agency notified NARA or, if available, the date the SF 115 was submitted to NARA);

(8) Restrictions on access if applicable;

(9) Disposition (''permanent,'' ''temporary,'' or ''unscheduled; SF 115 pending'');

(10) Date of disposition action (transfer to the National Archives of the United States or destruction);

(11) Physical location, including name and address of facility; and

(12) Control number or identifier used to track records.

(b) In the case of permanent and unscheduled records, provide copies of such documentation to NARA and advise NARA in writing of the new location whenever the records are moved to a new storage facility. For permanent records, the agency must transmit this documentation to the National Archives and Records Administration, Modern Records Programs (NWM), 8601 Adelphi Road, College Park, MD 20740–6001, phone number (301) 837–1738, no later than 30 days after records are transferred to the agency records center or commercial records storage facility.

(1) Retain temporary records until the expiration of their NARA-approved retention period and no longer, except as provided for in § 1226.18 of this subchapter.

(2) Transfer permanent records to the National Archives of the United States in accordance with 36 CFR part 1235.

### § 1232.18 What procedures must an agency follow to transfer records to an agency records center or commercial records storage facility?

Federal agencies must use the following procedures to transfer records to an agency records center or commercial records storage facility:

(a) Agreements with agency records centers or contracts with commercial records storage facilities must incorporate the standards in 36 CFR part 1234 and allow for inspections by the agency and NARA to ensure compliance. An agency must remove records promptly from a facility if deficiencies identified during an inspection are not corrected within six months of issuance of the report.

(b) For temporary records, the agency must make available to NARA on request the documentation specified in § 1232.16.

(c) Retain temporary records until the expiration of their NARA-approved retention period and no longer, except as provided for in § 1226.18 of this subchapter.

(d) Ensure that NARA-approved retention periods are implemented properly and that records documenting final disposition actions (destruction or transfer to the National Archives of the United States) are created and maintained as required by 36 CFR 1232.14.

(1) Agencies must establish procedures that ensure that temporary records are destroyed in accordance with NARA-approved records schedules and that NARA-approved changes to

schedules, including the General Records Schedules, are applied to records in agency records centers or commercial records storage facilities in a timely fashion. Procedures must include a requirement that the agency records center or commercial records storage facility notify agency records managers or the creating office before the disposal of temporary records unless disposal of temporary records is initiated by the agency.

(2) Move temporary records that are subsequently reappraised as permanent to a facility that meets the environmental control requirements for permanent records in § 1234.14 of this subchapter within one year of their re-appraisal, if not already in such a facility. (Paper-based permanent records in an existing records storage facility that does not meet the environmental control requirements in § 1234.14 of this subchapter on October 1, 2009, must be moved from that facility no later than February 28, 2010.)

(3) Agencies must establish procedures to ensure that the agency records centers or commercial records storage facilities transfer permanent records to the National Archives of the United States as individual series spanning one or more years and in accordance with the provisions of part 1235 of this subchapter.

(e) Agencies must ensure that records that are restricted because they are security classified or exempt from disclosure by statute, including the Privacy Act of 1974 (5 U.S.C. 552a, as amended), or regulation are stored and maintained in accordance with applicable laws, Executive orders, or regulations.

(f) Agencies must ensure that temporary records, including restricted records (security classified or exempted from disclosure by statute, including the Privacy Act of 1974, or regulation), are destroyed in accordance with the requirements specified in § 1226.24 of this subchapter.

(g) Agencies must ensure that emergency operating vital records, as defined in 36 CFR part 1223, that are transferred to an agency records center or commercial records storage facility are available in accordance with 36 CFR 1223.24.

(h) Provide access to appropriate NARA staff to records wherever they are located in order to conduct an inspection in accordance with 36 CFR part 1239 or to process a request for records disposition authority.

## PART 1233—TRANSFER, USE, AND DISPOSITION OF RECORDS IN A NARA FEDERAL RECORDS CENTER

Sec.

1233.1 What are the authorities for part 1233?
1233.2 What definitions apply to this part?
1233.3 What standards are used as guidance for this part?
1233.10 How does an agency transfer records to a NARA Federal Records Center?
1233.12 How does an agency transfer vital records to a NARA Federal Records Center?
1233.14 What personnel records must be transferred to the National Personnel Records (NPRC)?
1233.16 How does an agency transfer records to the National Personnel Records Center (NPRC)?
1233.18 What reference procedures are used in NARA Federal Records Centers?
1233.20 How are disposal clearances managed for records in NARA Federal Records Centers?

AUTHORITY: 44 U.S.C. 2907 and 3103.

SOURCE: 74 FR 51014, Oct. 2, 2009, unless otherwise noted.

### § 1233.1 What are the authorities for part 1233?

The statutory authorities for this part are 44 U.S.C. 2907 and 3103.

### § 1233.2 What definitions apply to this part?

See § 1220.18 of this subchapter for definitions of terms used throughout Subchapter B, including part 1233.

### § 1233.3 What standards are used as guidance for this part?

These regulations conform with guidance provided in ISO 15489–1:2001. Paragraphs 7.1 (Principles of records management programmes), 8.3.3 (Physical storage medium and protection), 8.3.6 (Access, retrieval and use), 8.3.7 (Retention and disposition), 9.6 (Storage and handling), and 9.8.3 (Location and tracking) apply to records creation and maintenance.

### § 1233.10 How does an agency transfer records to a NARA Federal Records Center?

An agency transfers records to a NARA Federal Records Center using the following procedures:

(a) General. NARA will ensure that its records centers meet the facilities standards in 36 CFR part 1234, which meets the agency's obligation in § 1232.14(a) of this subchapter.

(b) Agencies must use their designated NARA Federal Records Center(s) as specified in their agency agreement with NARA (Federal Records Center Program (FRCP)) for the storage of records.

(c) Transfers to NARA Federal Records Centers must be preceded by the submission of a Standard Form (SF) 135, Records Transmittal and Receipt, or an electronic equivalent. Preparation and submission of this form will meet the requirements for records description provided in § 1232.14(c) of this subchapter, except the folder title list required for permanent and unscheduled records. A folder title list is also required for records that are scheduled for sampling or selection after transfer.

(d) A separate SF 135 or electronic equivalent is required for each individual records series having the same disposition authority and disposition date.

(e) For further guidance on transfer of records to a NARA Federal Records Center, consult the NARA Federal Records Centers Program Web site (*http://www.archives.gov/frc/toolkit.html#transfer*), or current NARA publications and bulletins by contacting the National Archives and Records Administration, Office of Regional Records Services (NR), 8601 Adelphi Road, College Park, MD or phone (301) 837–2950, or individual NARA Federal Records Centers *http://www.archives.gov/frc/locations.html*.

### § 1233.12 How does an agency transfer vital records to a NARA Federal Records Center?

For assistance on selecting an appropriate site among NARA facilities for storage of vital records, agencies may contact National Archives and Records Administration, Office of Regional Records Services, 8601 Adelphi Road, College Park, MD or phone (301) 837–2950. The actual transfers are governed by the general requirements and procedures in this part and 36 CFR part 1223.

### § 1233.14 What personnel records must be transferred to the National Personnel Records Center (NPRC)?

(a) Civilian personnel files:

(1) General Records Schedules 1 and 2 specify that certain Federal civilian personnel, medical, and pay records must be centrally stored at the National Personnel Records Center headquartered in St. Louis, MO.

(2) [Reserved]

(b) The following types of medical treatment records are transferred to the NPRC:

(1) Inpatient (hospitalization) records created for all categories of patients (active duty personnel, retirees, and dependents) receiving inpatient treatment and extended ambulatory procedures; and

(2) Outpatient medical treatment records for military retirees, dependents, and other civilians treated at military health care facilities (excludes active duty military personnel at time of military discharge or retirement).

### § 1233.16 How does an agency transfer records to the National Personnel Records Center (NPRC)?

Agencies must use the following procedures when transferring records to the NPRC:

(a) *Civilian personnel files*.

(1) Forward the official personnel folder (OPF) and the employee medical folder (EMF) to the NPRC at the same time.

(2) Transfer EMFs and OPFs in separate folders.

(3) Retirement of individual folders is based on the date of separation and should occur within 90 to 120 days after the employee separates from Federal service.

(4) For additional guidance, consult the Office of Personnel Management (OPM) 1900 E Street, NW., Washington, DC 20415, phone number (202) 606–1800, Web site *http://www.opm.gov/feddata/*

*recguide2008.pdf*, for the OPM publication ''The Guide to Personnel Recordkeeping'' for procedures on the transfer of OPFs and EMFs.

(b) *Military medical records*. Military health care facilities should contact their facility records managers for guidance on transferring medical records to NPRC. For additional guidance, consult the ''Transactions with the National Personnel Records Center (NPRC), St. Louis, MO'' section of the NARA Federal Records Centers Program Web site (*http://www.archives.gov/frc/toolkit.html#transactions*).

(c) *Other guidance assistance*. For further guidance assistance consult the NPRC Web site (*http://www.archives.gov/facilities/mo/st_louis.html*).

### § 1233.18 What reference procedures are used in NARA Federal Records Centers?

(a) Agency records transferred to a NARA Federal Records Center remain in the legal custody of the agency. NARA acts as the agency's agent in maintaining the records. NARA will not disclose the record except to the agency that maintains the record, or under rules established by that agency which are consistent with existing laws.

(b) For general reference requests agencies may use an FRCP electronic system or, the Optional Form (OF) 11, Reference Request—Federal Records Centers, a form jointly designated by that agency and NARA, or their electronic equivalents.

(c) For civilian personnel records, agencies must use the following forms:

(1) Standard Form 127, Request for Official Personnel Folder (Separated Employee), to request transmission of personnel folders of separated employees stored at the National Personnel Records Center. Additional instructions on requesting OPFs are available online at *http://www.archives.gov/st-louis/civilian-personnel/federal-agencies.html*.

(2) Standard Form 184, Request for Employee Medical Folder (Separated Employee), to request medical folders stored at the National Personnel Records Center. Additional instructions on requesting EMFs are available online at *http://www.archives.gov/st-louis/civilian-personnel/federal-agencies.html*.

(3) Optional Form 11, Reference Request—Federal Records Center to request medical records transferred to other NARA Federal Records Centers prior to September 1, 1984. The request must include the name and address of the agency's designated medical records manager

(d) For military personnel records reference requests, the following forms must be used:

(1) Federal agencies must use Standard Form (SF) 180, Request Pertaining to Military Records, to obtain information from military service records in the National Personnel Records Center (Military Personnel Records); authorized agencies requesting the loan of a military personnel record may order records using eMilrecs (electronic equivalent of the SF 180). Access to eMilrecs and additional information is available on line at: *http://www.archives.gov/st-louis/military-personnel/agencies/ompf-fed-agency.html*.

(2) A military veteran or the next of kin of a deceased, former member of the military may order military personnel records through the submission of an SF 180 or an online records request system. Additional information is available on line at: *http://www.archives.gov/veterans/evetrecs*.

(3) Members of the public and nongovernmental organizations also may obtain copies of SF 180 by submitting a written request to the National Personnel Records Center (Military Personnel Records), 9700 Page Boulevard, St. Louis, MO 63132. OMB Control Number 3095–0029 has been assigned to the SF 180.

(4) Agencies may furnish copies of the SF 180 to the public to aid in inquiries. Copies of SF 180 are available at: *http://www.archives.gov/st-louis/military-personnel/standard-form-180.html#sf*.

(5) For guidance on requesting original medical treatment records, military hospitals and clinics should consult the ''Transactions with the National Personnel Records Center (NPRC), St. Louis, MO'' section of the NARA Federal Records Centers Program Web site (*http://www.archives.gov/frc/toolkit.html#transactions*).

(e) For further guidance on requesting records from a NARA Federal Records Center, consult the NARA Federal Records Centers Program Web site (*http://www.archives.gov/frc/toolkit.html#retrieval*), or current NARA publications and bulletins by contacting the Office of Regional Records Services (NR), or individual NARA Federal Records Centers (*http://www.archives.gov/frc/locations.html*), or the Washington National Records Center (NWMW).

### § 1233.20 How are disposal clearances managed for records in NARA Federal Records Centers?

(a) The National Personnel Records Center will destroy records covered by General Records Schedules 1 and 2 in accordance with those schedules without further agency clearance.

(b) NARA Federal Records Centers will destroy other eligible Federal records only with the written concurrence of the agency having legal custody of the records.

(c) NARA Federal Records Centers will maintain documentation on the final disposition of records, as required in 36 CFR 1232.14(d).

(d) When NARA approves an extension of retention period beyond the time authorized in the records schedule for records stored in NARA Federal Records Centers, NARA will notify those affected records centers to suspend disposal of the records (see § 1226.18 of this subchapter).

(e) For further guidance on records disposition, consult the NARA Federal Records Centers Program Web site (*http://www.archives.gov/frc/toolkit.html#disposition*), or current NARA publications and bulletins by contacting the Office of Regional Records Services (NR) or individual NARA Federal Records Centers (*http://www.archives.gov/frc/locations.html*), individual NARA regional facilities, or the Washington National Records Center (NWMW).

# PART 1234—FACILITY STANDARDS FOR RECORDS STORAGE FACILITIES

## Subpart A—General

Sec.
1234.1 What authorities apply to part 1234?
1234.2 What does this part cover?
1234.3 What publications are incorporated by reference?
1234.4 What definitions are used in this part?

## Subpart B—Facility Standards

1234.10 What are the facility requirements for all records storage facilities?
1234.12 What are the fire safety requirements that apply to records storage facilities?
1234.14 What are the requirements for environmental controls for records storage facilities?

## Subpart C—Handling Deviations From NARA's Facility Standards

1234. 20 What rules apply if there is a conflict between NARA standards and other regulatory standards that a facility must follow?
1234. 22 How does an agency request a waiver from a requirement in this subpart?
1234. 24 How does NARA process a waiver request?

## Subpart D—Facility Approval and Inspection Requirements

1234.30 How does an agency request authority to establish or relocate records storage facilities?
1234.32 What does an agency have to do to certify a fire-safety detection and suppression system?
1234.34 When may NARA conduct an inspection of a records storage facility?
APPENDIX A TO PART 1234—MINIMUM SECURITY STANDARDS FOR LEVEL III FEDERAL FACILITIES
APPENDIX B TO PART 1234—ALTERNATIVE CERTIFIED FIRE-SAFETY DETECTION AND SUPPRESSION SYSTEM(S)

AUTHORITY: 44 U.S.C. 2104(a), 2904, 2907, 3102, and 3103.

SOURCE: 74 FR 51014, Oct. 2, 2009, unless otherwise noted.

## Subpart A—General

### § 1234.1 What authorities apply to part 1234?

NARA is authorized to establish, maintain and operate records centers for Federal agencies under 44 U.S.C. 2907. NARA is authorized, under 44 U.S.C. 3103, to approve a records center that is maintained and operated by an agency. NARA is also authorized to promulgate standards, procedures, and

guidelines to Federal agencies with respect to the storage of their records in commercial records storage facilities. See 44 U.S.C. 2104(a), 2904, and 3102. The regulations in this subpart apply to all records storage facilities Federal agencies use to store, service, and dispose of their records.

### § 1234.2 What does this part cover?

(a) This part covers the establishment, maintenance, and operation of records centers, whether Federally-owned and operated by NARA or another Federal agency, or Federally-owned and contractor operated. This part also covers an agency's use of commercial records storage facilities. Records centers and commercial records storage facilities are referred to collectively as records storage facilities. This part specifies the minimum structural, environmental, property, and life-safety standards that a records storage facility must meet when the facility is used for the storage of Federal records.

(b) Except where specifically noted, this part applies to all records storage facilities. Certain noted provisions apply only to new records storage facilities established or placed in service on or after September 28, 2005.

### § 1234.3 What publications are incorporated by reference in this part?

(a) Certain material is incorporated by reference into this part with the approval of the Director of the Federal Register under 5 U.S.C. 552(a) and 1 CFR part 51. To enforce any edition other than that specified in this section, NARA must publish notice of change in the FEDERAL REGISTER and the material must be available to the public. All approved material is available for inspection at the Office of the Federal Register. For information on the availability of this material at the Office of the Federal Register, call 202–741–6030 or go to *http://www.archives.gov/federal_register/code_of_federal_regulations/ibr_locations.html.*

(b) The material incorporated by reference is also available for inspection at NARA's Archives Library Information Center (NWCCA), Room 2380, 8601 Adelphi Road, College Park, MD 20740–6001, phone number (301) 837–3415, and is available for purchase from the sources listed below. If you experience difficulty obtaining the standards referenced below, contact NARA's Space and Security Management Division (NAS), National Archives and Records Administration, 8601 Adelphi Road, College Park, MD 20740–6001, phone number (301) 837–1867.

(c) *American National Standards Institute (ANSI).* The following standards are available from the American National Standards Institute, 25 West 43rd St., 4th Floor, New York, NY 10036, phone number (212) 642–4900, or online at *http://webstore.ansi.org.*

(1) IAPMO/ANSI UMC 1–2003 (''IAPMO/ANSI UMC 1''), Uniform Mechanical Code, 2003, IBR approved for § 1234.12.

(2) NFPA 40 (''NFPA 40–1997''), Standard for the Storage and Handling of Cellulose Nitrate Motion Picture Film, 1997 Edition, IBR approved for § 1234.12.

(3) NFPA 42 (''NFPA 42''), Code for the Storage of Pyroxylin Plastic, 1997 Edition, IBR approved for § 1234.12.

(4) NFPA 54 (''NFPA 54''), National Fuel Gas Code, 2002 Edition, IBR approved for § 1234.12.

(5) NFPA 101 (''NFPA 101''), Life Safety Code, 1997 Edition, IBR approved for § 1234.12.

(d) *Document Center Inc.* The following standards are available from the standards reseller the Document Center Inc., 111 Industrial Road, Suite 9, Belmont, CA, 94002, phone number (650) 591–7600, or online at *http://www.document-center.com.*

(1) ANSI/NAPM IT9.18–1996 (''ANSI/NAPM IT9.18''), Imaging Materials—Processed Photographic Plates—Storage Practices, September 8, 1996, IBR approved for § 1234.14.

(2) ANSI/NAPM IT9.23–1996 (''ANSI/NAPM IT9.23''), Imaging Materials—Polyester Base Magnetic Tape—Storage, September 6, 1996, IBR approved for § 1234.14.

(e) *Document Engineering Co., Inc. (DECO).* The following standards are available from the standards reseller DECO—Document Engineering Co., Inc., 15210 Stagg Street, Van Nuys, CA, phone number (818) 782–1010, or online at *http://www.doceng.com.*

(1) ANSI/NAPM IT9.20–1996 (''ANSI/NAPM IT9.20''), Imaging Materials—Reflection Prints—Storage Practices, September 8, 1996, IBR approved for § 1234.14.

(2) NFPA 221 (''NFPA 221''), Standard for Fire Walls and Fire Barrier Walls, 1994 Edition, November 1, 1994, IBR approved for § 1234.4.

(3) ASTM E 119–98 (''ASTM E 119–98''), Standard Test Methods for Fire Tests of Building Construction and Materials, 1998, IBR approved for § 1234.12.

(4) NFPA 10 (''NFPA 10''), Portable Fire Extinguishers, 1994 Edition, November 1, 1994, IBR approved for Appendix B to part 1234.

(5) NFPA 13 (''NFPA 13''), Standard for Installation of Sprinkler Systems, 2002 Edition, October 1, 2002, IBR approved for §§ 1234.10 and 1234.12, and Appendix B to part 1234.

(6) NFPA 20 (''NFPA 20''), Standard for the Installation of Centrifugal Fire Pumps, 1996 Edition, January 1, 1996, IBR approved for Appendix B to part 1234.

(f) *Global Engineering Documents*. The following standards are available from the standards reseller Global Engineering Documents, 15 Inverness Way, East Englewood, CO 80112, phone number (800) 854–7179, or online at *http://www.global.ihs.com*.

(1) ANSI/PIMA IT9.25–1998 (''ANSI/PIMA IT9.25''), Imaging Materials—Optical Disc Media—Storage, 1998, IBR approved for § 1234.14.

(2) Reserved.

(g) *Techstreet*. The following standards are available from the standards reseller Techstreet, 3916 Ranchero Drive, Ann Arbor, MI 48108, phone number (800) 699–9277, or online at *http://www.Techstreet.com*.

(1) ANSI/PIMA IT9.11–1998 (''ANSI/PIMA IT9.11''), Imaging Materials—Processed Safety Photographic Films—Storage, January 1, 1998, IBR approved for § 1234.14.

(2) UL 827 (''UL 827''), Central-Station Alarm Services, Sixth Edition, April 23, 1999, IBR approved for Appendix B to part 1234.

(3) UL 1076 (''UL 1076''), Proprietary Burglar Alarm Units and Systems, Fifth Edition, February 1, 1999, IBR approved for § 1234.10

(h) The following standards are not available from the original publisher or a standards reseller. As indicated in paragraph (b) of this section, the standards are available for inspection at the NWCCA. In order to inspect the standards at a NARA location other than the NARA facility in College Park, MD, please contact the NWCCA, Room 2380, 8601 Adelphi Road, College Park, MD 20740–6001, phone number (301) 837–3415 or e-mail your request to *alic@nara.gov*.

(1) ANSI/ASHRAE 55–1992 (''ANSI/ASHRAE 55''), Thermal Environmental Conditions for Human Occupancy, 1992, IBR approved for § 1234.14.

(2) ANSI/ASHRAE 62–1989 (''ANSI/ASHRAE 62''), Ventilation for Acceptable Indoor Air Quality, 1989, IBR approved for § 1234.14.

(3) UL 611 (''UL 611''), Central-Station Burglar-Alarm Systems, February 22, 1996, IBR approved for § 1234.10

### § 1234.4 What definitions are used in this part?

The following definitions apply to this part:

*Auxiliary spaces* mean non-records storage areas such as offices, research rooms, other work and general storage areas but excluding boiler rooms or rooms containing equipment operating with a fuel supply such as generator rooms.

*Commercial records storage facility* has the meaning specified in § 1220.18 of this chapter.

*Existing records storage facility* means any records center or commercial records storage facility used to store records on September 27, 2005, and that has stored records continuously since that date.

*Fire barrier wall* means a wall, other than a fire wall, having a fire resistance rating, constructed in accordance with NFPA 221 (incorporated by reference, see § 1234.3).

*Licensed fire protection engineer* means a licensed or registered professional engineer with a recognized specialization in fire protection engineering. For those States that do not separately license or register fire protection engineers, a licensed or registered professional engineer with training and experience in fire protection engineering,

operating within the scope of that licensing or registration, who is also a professional member of the Society of Fire Protection Engineers.

*Must and provide* means that a provision is mandatory.

*New records storage facility* means any records center or commercial records storage facility established or converted for use as a records center or commercial records storage facility on or after September 28, 2005.

*Permanent record* has the meaning specified in § 1220.18 of this subchapter.

*Records center* has the meaning specified in § 1220.18 of this subchapter.

*Records storage area* means the area intended for long-term storage of records that is enclosed by four fire barrier walls, the floor, and the ceiling.

*Records storage facility* has the meaning specified in § 1220.18 of this subchapter.

*Sample/Select records* means records whose final disposition requires an analytical or statistical sampling prior to final disposition authorization, in which some percentage of the original accession will be retained as permanent records.

*Should or may* means that a provision is recommended or advised but not required.

*Temporary record* has the meaning specified in § 1220.18 of this subchapter.

*Unscheduled records* has the meaning specified in § 1220.18 of this subchapter.

## Subpart B—Facility Standards

### § 1234.10 What are the facility requirements for all records storage facilities?

(a) The facility must be constructed with non-combustible materials and building elements, including walls, columns and floors. There are two exceptions to this requirement:

(1) Roof elements may be constructed with combustible materials if installed in accordance with local building codes and if roof elements are protected by a properly installed, properly maintained wet-pipe automatic sprinkler system, as specified in NFPA 13 (incorporated by reference, see § 1234.3).

(2) An agency may request a waiver of the requirement specified in paragraph (a) from NARA for an existing records storage facility with combustible building elements to continue to operate until October 1, 2009. In its request for a waiver, the agency must provide documentation that the facility has a fire suppression system specifically designed to mitigate this hazard and that the system meets the requirements of § 1234.12(s). Requests must be submitted to the Director, Space and Security Management Division (NAS), National Archives and Records Administration, 8601 Adelphi Road, College Park, MD 20740–6001, phone number (301) 837–1867.

(b) A facility with two or more stories must be designed or reviewed by a licensed fire protection engineer and civil/structural engineer to avoid catastrophic failure of the structure due to an uncontrolled fire on one of the intermediate floor levels. For new buildings the seals on the construction drawings serve as proof of this review. For existing buildings, this requirement may be demonstrated by a professional letter of opinion under seal by a licensed fire protection engineer that the fire resistance of the separating floor(s) is/(are) at least four hours, and a professional letter of opinion under seal by a licensed civil/structural engineer that there are no obvious structural weaknesses that would indicate a high potential for structural catastrophic collapse under fire conditions.

(c) The building must be sited a minimum of five feet above and 100 feet from any 100 year flood plain areas, or be protected by an appropriate flood wall that conforms to local or regional building codes.

(d) The facility must be designed in accordance with the applicable national, regional, state, or local building codes (whichever is most stringent) to provide protection from building collapse or failure of essential equipment from earthquake hazards, tornadoes, hurricanes and other potential natural disasters.

(e) Roads, fire lanes and parking areas must permit unrestricted access for emergency vehicles.

(f) A floor load limit must be established for the records storage area by a licensed structural engineer. The limit must take into consideration the

height and type of the shelving or storage equipment, the width of the aisles, the configuration of the space, etc. The allowable load limit must be posted in a conspicuous place and must not be exceeded.

(g) The facility must ensure that the roof membrane does not permit water to penetrate the roof. NARA strongly recommends that this requirement be met by not mounting equipment on the roof and placing nothing else on the roof that may cause damage to the roof membrane. Alternatively, a facility may meet this requirement with stringent design specifications for roof-mounted equipment in conjunction with a periodic roof inspection program performed by appropriately certified professionals.

(1) New records storage facilities must meet the requirements in this paragraph (g) beginning on September 28, 2005.

(2) Existing facilities must meet the requirements in this paragraph (g) no later than October 1, 2009.

(h) Piping (with the exception of fire protection sprinkler piping and storm water roof drainage piping) must not be run through records storage areas unless supplemental measures such as gutters or shields are used to prevent water leaks and the piping assembly is inspected for potential leaks regularly. If drainage piping from roof drains must be run though records storage areas, the piping must be run to the nearest vertical riser and must include a continuous gutter sized and installed beneath the lateral runs to prevent leakage into the storage area. Vertical pipe risers required to be installed in records storage areas must be fully enclosed by shaft construction with appropriate maintenance access panels.

(1) New records storage facilities must meet the requirements in this paragraph (h) beginning on September 28, 2005.

(2) Existing facilities must meet the requirements in this paragraph (h) no later than October 1, 2009.

(i) The following standards apply to records storage shelving and racking systems:

(1) All storage shelving and racking systems must be designed and installed to provide seismic bracing that meets the requirements of the applicable state, regional, and local building code (whichever is most stringent);

(2) Racking systems, steel shelving, or other open-shelf records storage equipment must be braced to prevent collapse under full load. Each racking system or shelving unit must be industrial style shelving rated at least 50 pounds per cubic foot supported by the shelf;

(3) Compact mobile shelving systems (if used) must be designed to permit proper air circulation and fire protection (detailed specifications that meet this requirement can be provided by NARA by writing to Director, Space and Security Management Division (NAS), National Archives and Records Administration, 8601 Adelphi Road, College Park, MD 20740–6001.), phone number (301) 837–1867).

(j) The area occupied by the records storage facility must be equipped with an anti-intrusion alarm system, or equivalent, meeting the requirements of UL 1076 (incorporated by reference, see §1234.3), level AA, to protect against unlawful entry after hours and to monitor designated interior storage spaces. This intrusion alarm system must be monitored in accordance with UL 611, (incorporated by reference, see §1234.3).

(k) The facility must comply with the requirements for a Level III facility as defined in the Department of Justice, U. S. Marshals Service report Vulnerability Assessment of Federal Facilities dated June 28, 1995. These requirements are provided in Appendix A to this part 1234. Agencies may require compliance with Level IV or Level V facility security requirements if the facility is classified at the higher level.

(l) Records contaminated by hazardous materials, such as radioactive isotopes or toxins, infiltrated by insects, or exhibiting active mold growth must be stored in separate areas having separate air handling systems from other records.

(m) To eliminate damage to records and/or loss of information due to insects, rodents, mold and other pests that are attracted to organic materials under specific environmental conditions, the facility must have an Integrated Pest Management program as

defined in the Food Protection Act of 1996 (Section 303, Pub. L. 104–170, 110 Stat. 1512). This states in part that Integrated Pest Management is a sustainable approach to managing pests by combining biological, cultural, physical, and chemical tools in a way that minimizes economic, health, and environmental risks. The IPM program emphasizes three fundamental elements:

(1) *Prevention*. IPM is a preventive maintenance process that seeks to identify and eliminate potential pest access, shelter, and nourishment. It also continually monitors for pests themselves, so that small infestations do not become large ones;

(2) *Least-toxic methods*. IPM aims to minimize both pesticide use and risk through alternate control techniques and by favoring compounds, formulations, and application methods that present the lowest potential hazard to humans and the environment; and

(3) *Systems approach*. The IPM pest control contract must be effectively coordinated with all other relevant programs that operate in and around a building, including plans and procedures involving design and construction, repairs and alterations, cleaning, waste management, food service, and other activities.

(n) For new records storage facilities only, the additional requirements in this paragraph (n) must be met:

(1) Do not install mechanical equipment, excluding material handling and conveyance equipment that have operating thermal breakers on the motor, containing motors rated in excess of 1 HP within records storage areas (either floor mounted or suspended from roof support structures).

(2) Do not install high-voltage electrical distribution equipment (*i.e.*, 13.2kv or higher switchgear and transformers) within records storage areas (either floor mounted or suspended from roof support structures).

(3) A redundant source of primary electric service such as a second primary service feeder should be provided to ensure continuous, dependable service to the facility especially to the HVAC systems, fire alarm and fire protection systems. Manual switching between sources of service is acceptable.

(4) A facility storing permanent records must be kept under positive air pressure, especially in the area of the loading dock. In addition, to prevent fumes from vehicle exhausts from entering the facility, air intake louvers must not be located in the area of the loading dock, adjacent to parking areas, or in any location where a vehicle engine may be running for any period of time. Loading docks must have an air supply and exhaust system that is separate from the remainder of the facility.

### § 1234.12 What are the fire safety requirements that apply to records storage facilities?

(a) The fire detection and protection systems must be designed or reviewed by a licensed fire protection engineer. If the system was not designed by a licensed fire protection engineer, the review requirement is met by furnishing a report under the seal of a licensed fire protection engineer that describes the design intent of the fire detection and suppression system, detailing the characteristics of the system, and describing the specific measures beyond the minimum features required by code that have been incorporated to minimize loss. The report should make specific reference to appropriate industry standards used in the design, such as those issued by the National Fire Protection Association, and any testing or modeling or other sources used in the design.

(b) All interior walls separating records storage areas from each other and from other storage areas in the building must be at least three-hour fire barrier walls. A records storage facility may not store more than 250,000 cubic feet total of Federal records in a single records storage area. When Federal records are combined with other records in a single records storage area, only the Federal records will apply toward this limitation.

(c) Fire barrier walls that meet the following specifications must be provided:

(1) For existing records storage facilities, at least one-hour-rated fire barrier walls must be provided between the records storage areas and other auxiliary spaces.

(2) For new records storage facilities, two-hour-rated fire barrier walls must be provided between the records storage areas and other auxiliary spaces. One exterior wall of each stack area must be designed with a maximum fire resistive rating of one hour, or, if rated more than one hour, there must be at least one knock-out panel in one exterior wall of each stack area.

(d) Penetrations in the walls must not reduce the specified fire resistance ratings. The fire resistance ratings of structural elements and construction assemblies must be in accordance with ASTM E 119–98 (incorporated by reference, see §1234.3).

(e) The fire resistive rating of the roof must be a minimum of ½ hour for all records storage facilities, or must be protected by an automatic sprinkler system designed, installed, and maintained in accordance with NFPA 13 (incorporated by reference, see §1234.3).

(f) Openings in fire barrier walls separating records storage areas must be avoided to the greatest extent possible. If openings are necessary, they must be protected by self-closing or automatic Class A fire doors, or equivalent doors that maintain the same rating as the wall.

(g) Roof support structures that cross or penetrate fire barrier walls must be cut and supported independently on each side of the fire barrier wall.

(h) If fire barrier walls are erected with expansion joints, the joints must be protected to their full height.

(i) Building columns in the records storage areas must be at least 1-hour fire resistant or protected in accordance with NFPA 13 (incorporated by reference, see §1234.3).

(j) Automatic roof vents for routine ventilation purposes must not be designed into new records storage facilities. Automatic roof vents, designed solely to vent in the case of a fire, with a temperature rating at least twice that of the sprinkler heads are acceptable.

(k) Where lightweight steel roof or floor supporting members (e.g., bar joists having top chords with angles 2 by 12 inches or smaller, 1/4-inch thick or smaller, and 13/16-inch or smaller Web diameters) are present, they must be protected either by applying a 10-minute fire resistive coating to the top chords of the joists, or by retrofitting the sprinkler system with large drop sprinkler heads. If a fire resistive coating is applied, it must be a product that will not release (off gas) harmful fumes into the facility. If fire resistive coating is subject to air erosion or flaking, it must be fully enclosed in a drywall containment constructed of metal studs with fire retardant drywall. Retrofitting may require modifications to the piping system to ensure that adequate water capacity and pressure are provided in the areas to be protected with these large drop sprinkler heads.

(l) Open flame (oil or gas) unit heaters or equipment, if used in records storage areas, must be installed or used in the records storage area in accordance with NFPA 54 (incorporated by reference, see §1234.3), and the IAPMO/ANSI UMC 1, Uniform Mechanical Code (incorporated by reference, see §1234.3).

(m) For existing records storage facilities, boiler rooms or rooms containing equipment operating with a fuel supply (such as generator rooms) must be separated from records storage areas by 2-hour-rated fire barrier walls with no openings directly from these rooms to the records storage areas. Such areas must be vented directly to the outside to a location where fumes will not be drawn back into the facility.

(n) For new records storage facilities, boiler rooms or rooms containing equipment operating with a fuel supply (such as generator rooms) must be separated from records storage areas by 4-hour-rated fire barrier walls with no openings directly from these rooms to the records storage areas. Such areas must be vented directly to the outside to a location where fumes will not be drawn back into the facility.

(o) For new records storage facilities, fuel supply lines must not be installed in areas containing records and must be separated from such areas with 4-hour rated construction assemblies.

(p) Equipment rows running perpendicular to the wall must comply with NFPA 101 (incorporated by reference, see §1234.3), with respect to egress requirements.

(q) No oil-type electrical transformers, regardless of size, except thermally protected devices included in fluorescent light ballasts, may be installed in the records storage areas. All electrical wiring must be in metal conduit, except that armored cable may be used where flexible wiring connections to light fixtures are required. Battery charging areas for electric forklifts must be separated from records storage areas with at least a 2-hour rated fire barrier wall.

(r) Hazardous materials, including records on cellulose nitrate film, must not be stored in records storage areas. Nitrate motion picture film and nitrate sheet film may be stored in separate areas that meet the requirements of the appropriate NFPA standards, NFPA 40–1997 (incorporated by reference, see § 1234.3), or NFPA 42 (incorporated by reference, see § 1234.3).

(s) All record storage and adjoining areas must be protected by a professionally-designed fire-safety detection and suppression system that is designed to limit the maximum anticipated loss in any single fire event involving a single ignition and no more than 8 ounces of accelerant to a maximum of 300 cubic feet of records destroyed by fire. Section 1234.32 specifies how to document compliance with this requirement.

### § 1234.14 What are the requirements for environmental controls for records storage facilities?

(a) *Paper-based temporary records.* Paper-based temporary records must be stored under environmental conditions that prevent the active growth of mold. Exposure to moisture through leaks or condensation, relative humidities in excess of 70%, extremes of heat combined with relative humidity in excess of 55%, and poor air circulation during periods of elevated heat and relative humidity are all factors that contribute to mold growth.

(b) *Nontextual temporary records.* Nontextual temporary records, including microforms and audiovisual and electronic records, must be stored in records storage space that is designed to preserve them for their full retention period. New records storage facilities that store nontextual temporary records must meet the requirements in this paragraph (b) beginning on September 28, 2005. Existing records storage facilities that store nontextual temporary records must meet the requirements in this paragraph (b) no later than October 1, 2009. At a minimum, nontextual temporary records must be stored in records storage space that meets the requirements for medium term storage set by the appropriate standard in this paragraph (b). In general, medium term conditions as defined by these standards are those that will ensure the preservation of the materials for at least 10 years with little information degradation or loss. Records may continue to be usable for longer than 10 years when stored under these conditions, but with an increasing risk of information loss or degradation with longer times. If temporary records require retention longer than 10 years, better storage conditions (cooler and drier) than those specified for medium term storage will be needed to maintain the usability of these records. The applicable standards are:

(1) ANSI/PIMA IT9.11 (incorporated by reference, see § 1234.3);

(2) ANSI/NAPM IT9.23 (incorporated by reference, see § 1234.3);

(3) ANSI/PIMA IT9.25 (incorporated by reference, see § 1234.3);

(4) ANSI/NAPM IT9.20 (incorporated by reference, see § 1234.3); and/or

(5) ANSI/NAPM IT9.18 (incorporated by reference, see § 1234.3).

(c) *Paper-based permanent, unscheduled and sample/select records.* Paper-based permanent, unscheduled, and sample/select records must be stored in records storage space that provides 24 hour/365 days per year air conditioning (temperature, humidity, and air exchange) equivalent to that required for office space. See ANSI/ASHRAE Standard 55 (incorporated by reference, see § 1234.3), and ASHRAE Standard 62 (incorporated by reference, see § 1234.3), for specific requirements. New records storage facilities that store paper-based permanent, unscheduled, and/or sample/select records must meet the requirement in this paragraph (c) beginning on September 28, 2005. Existing storage facilities that store paper-based permanent, unscheduled, and/or sample/select records must meet the

requirement in this paragraph (c) no later than October 1, 2009.

(d) *Nontextual permanent, unscheduled, and/or sample/select records.* All records storage facilities that store microfilm, audiovisual, and/or electronic permanent, unscheduled, and/or sample/select records must comply with the storage standards for permanent and unscheduled records in parts 1238, 1237, and/or 1236 of this subchapter, respectively.

## Subpart C—Handling Deviations From NARA's Facility Standards

### § 1234.20 What rules apply if there is a conflict between NARA standards and other regulatory standards that a facility must follow?

(a) If any provisions of this part conflict with local or regional building codes, the following rules of precedence apply:

(1) Between differing levels of fire protection and life safety, the more stringent provision applies; and

(2) Between mandatory provisions that cannot be reconciled with a requirement of this part, the local or regional code applies.

(b) If any of the provisions of this part conflict with mandatory life safety or ventilation requirements imposed on underground storage facilities by 30 CFR chapter I, 30 CFR chapter I applies.

(c) NARA reserves the right to require documentation of the mandatory nature of the conflicting code and the inability to reconcile that provision with NARA requirements.

### § 1234.22 How does an agency request a waiver from a requirement in this part?

(a) *Types of waivers that may be approved.* NARA may approve exceptions to one or more of the standards in this part for:

(1) Systems, methods, or devices that are demonstrated to have equivalent or superior quality, strength, fire resistance, effectiveness, durability, and safety to those prescribed by this subpart;

(2) Existing agency records centers that met the NARA standards in effect prior to January 3, 2000, but do not meet a new standard required to be in place on September 28, 2005; and

(3) The application of roof requirements in §§ 1234.10 and 1234.12 to underground storage facilities.

(b) *Where to submit a waiver request.* The agency submits a waiver request, containing the information specified in paragraphs (c), (d), and/or (e) of this section to the Director, Space and Security Management Division (NAS), National Archives and Records Administration, 8601 Adelphi Rd., College Park, MD 20740–6001, phone number (301) 837–1867.

(c) *Content of request for waivers for equivalent or superior alternatives.* The agency's waiver request must contain:

(1) A statement of the specific provision(s) of this part for which a waiver is requested, a description of the proposed alternative, and an explanation how it is equivalent to or superior to the NARA requirement; and

(2) Supporting documentation that the alternative does not provide less protection for Federal records than that which would be provided by compliance with the corresponding provisions contained in this subpart. Documentation may take the form of certifications from a licensed fire protection engineer or a structural or civil engineer, as appropriate; reports of independent testing; reports of computer modeling; and/or other supporting information.

(d) *Content of request for waiver for previously compliant agency records center.* The agency's waiver request must identify which requirement(s) the agency records center cannot meet and provide a plan with milestones for bringing the center into compliance.

(e) *Content of request for waiver of roof requirements for underground facility.* The agency's waiver request must identify the location of the facility and whether the facility is a drift entrance facility or a vertical access facility.

### § 1234.24 How does NARA process a waiver request?

(a) *Waiver for equivalent or superior alternative.* NARA will review the waiver request and supporting documentation.

(1) If in NARA's judgment the supporting documentation clearly supports the claim that the alternative is

equivalent or superior to the NARA requirement, NARA will grant the waiver and notify the requesting agency within 30 calendar days.

(2) If NARA questions whether supporting documentation demonstrates that the proposed alternative offers at least equal protection to Federal records, NARA will consult the appropriate industry standards body or other qualified expert before making a determination. NARA will notify the requesting agency within 30 calendar days of receipt of the request that consultation is necessary and will provide a final determination within 60 calendar days. If NARA does not grant the waiver, NARA will furnish a full explanation of the reasons for its decision.

(b) *Waiver of new requirement for existing agency records center*. NARA will review the agency's waiver request and plan to bring the facility into compliance.

(1) NARA will approve the request and plan within 30 calendar days if NARA judges the planned actions and time frames for bringing the facility into compliance are reasonable.

(2) If NARA questions the feasibility or reasonableness of the plan, NARA will work with the agency to develop a revised plan that NARA can approve and the agency can implement. NARA may grant a short-term temporary waiver, not to exceed 180 calendar days, while the revised plan is under development.

(c) *Waiver of roof requirements for underground storage facilities*. NARA will normally grant the waiver and notify the requesting agency within 10 work days if the agency has not also requested a waiver of a different requirement under § 1234.30. If the agency has another waiver request pending for the same facility, NARA will respond to all of the waiver requests at the same time and within the longest time limits.

## Subpart D—Facility Approval and Inspection Requirements

### § 1234.30 How does an agency request authority to establish or relocate records storage facilities?

(a) *General policy*. Agencies are responsible for ensuring that records in their legal custody are stored in appropriate space as outlined in this part. Under § 1232.18(a), agencies are responsible for initiating action to remove records from space that does not meet these standards if deficiencies are not corrected within 6 months after initial discovery of the deficiencies by NARA or the agency and to complete removal of the records within 18 months after initial discovery of the deficiencies.

(1) *Agency records centers*. Agencies must obtain prior written approval from NARA before establishing or relocating an agency records center. Each separate agency records center must be specifically approved by NARA prior to the transfer of any records to that individual facility. If an agency records center has been approved for the storage of Federal records of one agency, any other agency that proposes to store its records in that facility must still obtain NARA approval to do so.

(2) *Commercial records storage facilities*. An agency may contract for commercial records storage services. However, before any agency records are transferred to a commercial records storage facility, the transferring agency must ensure that the facility meets all of the requirements for an agency records storage facility set forth in this subpart and must submit the documentation required in paragraph (e) of this section.

(b) *Exclusions*. For purposes of this section, the term ''agency records center'' excludes NARA-owned and operated records centers. For purposes of this section and § 1234.34, the term ''agency records center'' also excludes agency records staging and/or holding areas with a capacity for containing less than 25,000 cubic feet of records. However, such records centers and areas, including records centers operated and maintained by NARA, must comply with the facility standards in §§ 1234.10 through 1234.14.

(c) *Content of requests for agency records centers*. Requests for authority to establish or relocate an agency records center, or to use an agency records center operated by another agency, must be submitted in writing to the Director, Space and Security Management Division (NAS), National Archives and Records Administration, 8601 Adelphi Road, College Park, MD

20740–6001, phone number (301) 837–1867. The request must identify the specific facility and, for requests to establish or relocate the agency's own records center, document compliance with the standards in this subpart. Documentation requirements for § 1234.12(s) are specified in § 1234.32.

(d) *Approval of requests for agency records centers.* NARA will review the submitted documentation to ensure the facility demonstrates full compliance with the standards in this subpart. NARA reserves the right to visit the facility, if necessary, to make the determination of compliance. NARA will inform the agency of its decision within 45 calendar days after the request is received, and will provide the agency information on the areas of noncompliance if the request is denied. Requests will be denied only if NARA determines that the facility does not demonstrate full compliance with the standards in this subpart. Approvals will be valid for a period of 10 years, unless the facility is materially changed before then or an agency or NARA inspection finds that the facility does not meet the standards in this subpart. Material changes require submission of a new request for NARA approval.

(e) *Documentation requirements for storing Federal records in commercial records storage facilities.* At least 45 calendar days before an agency first transfers records to a commercial records storage facility, the agency must submit documentation to NARA that the facility complies with the standards in this subpart. The documentation may take the form of a copy of the agency's contract that incorporates this subpart in its provisions or a statement from the agency records officer that certifies that the facility meets the standards in this subpart. An agency must provide the documentation for each separate commercial records storage facility where its records will be stored. Documentation must be sent to the Director, Space and Security Management Division (NAS), National Archives and Records Administration, 8601 Adelphi Road, College Park, MD 20740–6001, phone number (301) 837–1867. The agency must submit updated documentation to NARA every 10 years if it continues to store records in that commercial records storage facility.

### § 1234.32 What does an agency have to do to certify a fire-safety detection and suppression system?

(a) *Content of documentation.* The agency must submit documentation to the Director, Space and Security Management Division (NAS), National Archives and Records Administration, 8601 Adelphi Road, College Park, MD 20740–6001, phone number (301) 837–1867, that describes the space being protected (e.g., the type and stacking height of the storage equipment used, or how the space is designed, controlled, and operated) and the characteristics of the fire-safety detection and suppression system used. The documentation must demonstrate how that system meets the requirement in § 1234.12(s) through:

(1) A statement that the facility is using a NARA certified system as described in Appendix B to this part;

(2) A report of the results of independent live fire testing (Factory Mutual, Underwriters Laboratories or Southwest Research Institute); or

(3) A report under seal of a licensed fire protection engineer that:

(i) Describes the design intent of the fire suppression system to limit the maximum anticipated loss in any single fire event involving a single ignition and no more than 8 fluid ounces of petroleum-type hydrocarbon accelerant (such as, for example, heptanes or gasoline) to a maximum of 300 cubic feet of Federal records destroyed by fire. The report need not predict a maximum single event loss at any specific number, but rather should describe the design intent of the fire suppression system. The report may make reasonable engineering and other assumptions such as that the fire department responds within XX minutes (the local fire department's average response time) and promptly commences suppression actions. In addition, any report prepared under this paragraph should assume that the accelerant is saturated in a cotton wick that is 3 inches in diameter and 6 inches long and sealed in a plastic bag and that the fire is started in an aisle at the face of

a carton at floor level. Assumptions must be noted in the report;

(ii) Details the characteristics of the system; and

(iii) Describes the specific measures beyond the minimum features required by the applicable building code that have been incorporated to limit destruction of records. The report should make specific references to industry standards used in the design, such as those issued by the National Fire Protection Association, and any testing or modeling or other sources used in the design.

(b) *NARA action.* (1) NARA will approve the fire-safety detection and suppression system within 10 work days if NARA has previously approved the system design for similarly configured space or if a report of independent testing of a new system design is furnished as documentation.

(2) If, in NARA's judgment, the supporting documentation provided in accordance with paragraph (a)(3) of this section clearly demonstrates compliance with §1234.12(s), NARA will approve the fire-safety detection and suppression system within 30 calendar days.

(3) If NARA questions whether supporting documentation demonstrates compliance with §1234.12(s), NARA will consult the appropriate industry standards body or other qualified expert before making a determination. Before any consultation, NARA may ask the agency for additional clarifying information. NARA will notify the requesting agency within 30 calendar days of receipt of the request that consultation is necessary and will provide a final determination within 60 calendar days. If NARA does not approve the system, NARA will furnish a full explanation of the reasons for its decision.

(4) NARA will maintain a list of approved alternative systems.

### §1234.34 When may NARA conduct an inspection of a records storage facility?

(a) At the time an agency submits a request to establish an agency records center, pursuant to §1234.30, NARA may conduct an inspection of the proposed facility to ensure that the facility complies fully with the standards in this subpart. NARA may also conduct periodic inspections of agency records centers so long as such facility is used as an agency records center. NARA will inspect its own records center facilities on a periodic basis to ensure that they are in compliance with the requirements of this subpart.

(b) Agencies must ensure, by contract or otherwise, that agency and NARA officials, or their delegates, have the right to inspect commercial records storage facilities to ensure that such facilities fully comply with the standards in this subpart. NARA may conduct periodic inspections of commercial records storage facilities so long as agencies use such facilities to store agency records. The using agency, not NARA, will be responsible for paying any fee or charge assessed by the commercial records storage facility for NARA's conducting an inspection.

(c) NARA will contact the agency operating the records center or the agency holding a contract with a commercial records storage facility in advance to set a date for the inspection.

## APPENDIX A TO PART 1234—MINIMUM SECURITY STANDARDS FOR LEVEL III FEDERAL FACILITIES

RECOMMENDED STANDARDS CHART

[Reproduced from Section 2.3 (pp. 2–6 through 2–9) of U.S. Department of Justice, United States Marshals Service report *Vulnerability Assessment of Federal Facilities*]

| | Level III |
|---|---|
| **Perimeter Security** | |
| *Parking:* | |
| Control of facility parking | Required. |
| Control of adjacent parking | Desirable. |
| Avoid leases where parking cannot be controlled | Desirable. |
| Leases should provide security control for adjacent parking | Desirable. |
| Post signs and arrange for towing unauthorized vehicles | Required. |
| ID system and procedures for authorized parking (placard, decal, card key, etc.) | Required. |
| Adequate lighting for parking areas | Required. |

RECOMMENDED STANDARDS CHART—Continued

[Reproduced from Section 2.3 (pp. 2–6 through 2–9) of U.S. Department of Justice, United States Marshals Service report *Vulnerability Assessment of Federal Facilities*]

| | Level III |
|---|---|
| *Closed Circuit Television (CCTV) Monitoring:* | |
| CCTV surveillance cameras with time lapse video recording | Recommended. |
| Post signs advising of 24 hour video surveillance | Recommended. |
| *Lighting:* | |
| Lighting with emergency power backup | Required. |
| *Physical Barriers:* | |
| Extend physical perimeter with barriers (concrete and/or steel composition) | Desirable. |
| Parking barriers | Desirable. |
| **Entry Security** | |
| *Receiving/Shipping:* | |
| Review receiving/shipping procedures (current) | Required. |
| Implement receiving/shipping procedures (modified) | Required. |
| *Access Control:* | |
| Evaluate facility for security guard requirements | Required. |
| Security guard patrol | Recommended. |
| Intrusion detection system with central monitoring capability | Required. |
| Upgrade to current life safety standards (fire detection, fire suppression systems, etc.) | Required. |
| *Entrances/Exits:* | |
| X-ray & magnetometer at public entrances | Recommended. |
| Require x-ray screening of all mail/packages | Recommended. |
| High security locks | Required. |
| **Interior Security** | |
| *Employee/Visitor Identification:* | |
| Agency photo ID for all personnel displayed at all times | Recommended. |
| Visitor control/screening system | Required. |
| Visitor identification accountability system | Recommended. |
| Establish ID issuing authority | Recommended. |
| *Utilities:* | |
| Prevent unauthorized access to utility areas | Required. |
| Provide emergency power to critical systems (alarm systems, radio communications, computer facilities, etc.). | Required. |
| *Occupant Emergency Plans:* | |
| Examine occupant emergency plans (OEP) and contingency procedures based on threats | Required. |
| OEPs in place, updated annually, periodic testing exercise | Required. |
| Assign & train OEP officials (assignment based on largest tenant in facility) | Required. |
| Annual tenant training | Required. |
| *Daycare Centers:* | |
| Evaluate whether to locate daycare facilities in buildings with high threat activities | Required. |
| Compare feasibility of locating daycare in outside locations | Required. |
| **Security Planning** | |
| *Intelligence Sharing:* | |
| Establish law enforcement agency/security liaisons | Required. |
| Review/establish procedure for intelligence receipt/dissemination | Required. |
| Establish uniform security/threat nomenclature | Required. |
| *Training:* | |
| Conduct annual security awareness training | Required. |
| Establish standardized unarmed guard qualifications/training requirements | Required. |
| Establish standardized armed guard qualifications/training requirements | Required. |
| *Tenant Assignment:* | |
| Co-locate agencies with similar security needs | Desirable. |
| Do not co-locate high/low risk agencies | Desirable. |
| *Administrative Procedures:* | |
| Establish flexible work schedule in high threat/high risk areas to minimize employee vulnerability to criminal activity. | Desirable. |
| Arrange for employee parking in/near building after normal work hours | Recommended. |
| Conduct background security checks and/or establish security control procedures for service contract personnel. | Required. |
| *Construction/Renovation:* | |
| Install mylar film on all exterior windows (shatter protection) | Recommended. |
| Review current projects for blast standards | Required. |
| Review/establish uniform standards for construction | Required. |
| Review/establish new design standard for blast resistance | Required. |
| Establish street set-back for new construction | Recommended. |

TERMS AND DEFINITIONS IN RECOMMENDED STANDARDS CHART

[Reproduced from Appendix B, Details of Recommended Security Standards, U.S. Department of Justice, United States Marshals Service report *Vulnerability Assessment of Federal Facilities*]

| Term | Definition/description |
|---|---|
| **B.1 Perimeter Security** | |
| **Parking** | |
| Control of Facility Parking | Access to government parking should be limited where possible to government vehicles and personnel. At a minimum, authorized parking spaces and vehicles should be assigned and identified. |
| Control of Adjacent Parking | Where feasible, parking areas adjacent to federal space should also be controlled to reduce the potential for threats against Federal facilities and employee exposure to criminal activity. |
| Avoid Leases Where Parking Cannot Be Controlled. | Avoid leasing facilities where parking cannot be controlled. If necessary, relocate offices to facilities that do provide added security through regulated parking. |
| Lease Should Provide Control for Adjacent Parking. | Endeavor to negotiate guard services as part of lease. |
| Post Signs and Arrange for Towing Unauthorized Vehicles. | Procedures should be established and implemented to alert the public to towing policies, and the removal of unauthorized vehicles. |
| ID System and Procedures for Authorized Parking. | Procedures should be established for identifying vehicles and corresponding parking spaces (placard, decal, card key, etc.) |
| Adequate Lighting for Parking Areas | Effective lighting provides added safety for employees and deters illegal or threatening activities. |
| **Closed circuit television (CCTV) monitoring** | |
| CCTV Surveillance Cameras With Time Lapse Video Recording. | Twenty-four hour CCTV surveillance and recording is desirable at all locations as a deterrent. Requirements will depend on assessment of the security level for each facility. Time-lapse video recordings are also highly valuable as a source of evidence and investigative leads. |
| Post Signs Advising of 24 Hour Video Surveillance. | Warning signs advising of twenty-four hour surveillance act as a deterrent in protecting employees and facilities. |
| **Lighting** | |
| Lighting with Emergency Power Backup | Standard safety code requirement in virtually all areas. Provides for safe evacuation of buildings in case of natural disaster, power outage, or criminal/terrorist activity. |
| **Physical Barriers** | |
| Extend Physical Perimeter, With Barriers | This security measure will only be possible in locations where the Government controls the property and where physical constraints are not present. (barriers of concrete and/or steel composition) |
| Parking Barriers | Desirable to prevent unauthorized vehicle access. |
| **B.2 Entry Security** | |
| **Receiving/Shipping** | |
| Review Receiving/Shipping Procedures (Current). | Audit current standards for package entry and suggest ways to enhance security. |
| Implement Receiving/Shipping Procedures (Modified). | After auditing procedures for receiving/shipping, implement improved procedures for security enhancements. |
| **Access Control** | |
| Evaluate Facility for Security Guard Requirements. | If security guards are required, the number of guards at any given time will depend on the size of the facility, the hours of operation, and current risk factors, etc. |
| Security Guard Patrol | Desirable for level I and II facilities and may be included as lease option. Level III, IV and V facilities will have security guard patrol based on facility evaluation. |
| Intrusion Detection System With Central Monitoring Capability. | Desirable in Level I facilities, based on evaluation for Level II facilities, and required for Levels III, IV and V. |
| Upgrade to Current Life Safety Standards | Required for all facilities as part of GSA design requirements, (e.g. fire detection, fire suppression systems, etc.) |
| **Entrances/Exits** | |
| X-Ray and Magnetometer at Public Entrances. | May be impractical for Level I and II facilities. Level III and IV evaluations would focus on tenant agencies, public interface, and feasibility. Required for Level V. |
| Require X-Ray Screening of all Mail/Packages. | All packages entering building should be subject to x-ray screening and/or visual inspection. |

TERMS AND DEFINITIONS IN RECOMMENDED STANDARDS CHART—Continued

[Reproduced from Appendix B, Details of Recommended Security Standards, U.S. Department of Justice, United States Marshals Service report *Vulnerability Assessment of Federal Facilities*]

| Term | Definition/description |
|---|---|
| High Security Locks | Any exterior entrance should have a high security lock as determined by GSA specifications and/or agency requirements. |
| **B.3 Interior Security** | |
| **Employee/Visitor Identification** | |
| Agency Photo ID for all Personnel Displayed At All Times. | May not be required in smaller facilities. |
| Visitor Control/Security System | Visitors should be readily apparent in Level I facilities. Other facilities may ask visitors to sign-in with a receptionist or guard, or require an escort, or formal identification/badge. |
| Visitor Id Accountability System | Stringent methods of control over visitor badges will ensure that visitors wearing badges have been screened and are authorized to be at the facility during the appropriate time frame. |
| Establish Id Issuing Authority | Develop procedures and establish authority for issuing employee and visitor IDs. |
| **Utilities** | |
| Prevent Unauthorized Access to Utility Areas. | Smaller facilities may not have control over utility access, or locations of utility areas. Where possible, assure that utility areas are secure and that only authorized personnel can gain entry. |
| Provide Emergency Power To Critical Systems. | Tenant agency is responsible for determining which computer and communication systems require back-up power. All alarm systems, CCTV monitoring devices, fire detection systems, entry control devices, etc. require emergency power sources. (Alarm Systems, Radio Communications, Computer Facilities, Etc.) |
| **Occupant Emergency Plans** | |
| Examine Occupant Emergency Plan (OEP) and Contingency Procedures Based on Threats. | Review and update current OEP procedures for thoroughness. OEPs should reflect the current security climate. |
| Assign and Train OEP Officials | Assignment based on GSA requirement that largest tenant in facility maintain OEP responsibility. Officials should be assigned, trained and a contingency plan established to provide for the possible absence of OEP officials in the event of emergency activation of the OEP. |
| Annual Tenant Training | All tenants should be aware of their individual responsibilities in an emergency situation. |
| **Day Care Center** | |
| Re-Evaluate Current Security and Safety Standards. | Conduct a thorough review of security and safety standards. |
| Assess Feasibility of Locating Day Care Within Federal Facility. | If a facility is being considered for a day care center, an evaluation should be made based on the risk factors associated with tenants and the location of the facility. |
| **B.4 Security Planning** | |
| **Intelligence Sharing** | |
| Establish Law Enforcement Agency/Security Liaisons. | Intelligence sharing between law enforcement agencies and security organizations should be established in order to facilitate the accurate flow of timely and relevant information between appropriate government agencies. Agencies involved in providing security must be part of the complete intelligence process. |
| Review/Establish Procedures for Intelligence Receipt/Dissemination. | Determine what procedures exist to ensure timely delivery of critical intelligence. Review and improve procedures to alert agencies and specific targets of criminal/terrorist threats. Establish standard administrative procedures for response to incoming alerts. Review flow of information for effectiveness and time critical dissemination. |
| Establish Uniform Security/Threat Nomenclature. | To facilitate communication, standardized terminology for Alert Levels should be implemented. (Normal, Low, Moderate, and High—As recommended by Security Standards Committee) |
| **Training** | |
| Conduct Annual Security Awareness Training. | Provide security awareness training for all tenants. At a minimum, self-study programs utilizing videos, and literature, etc. should be implemented. These materials should provide up-to-date information covering security practices, employee security awareness, and personal safety, etc. |

TERMS AND DEFINITIONS IN RECOMMENDED STANDARDS CHART—Continued

[Reproduced from Appendix B, Details of Recommended Security Standards, U.S. Department of Justice, United States Marshals Service report *Vulnerability Assessment of Federal Facilities*]

| Term | Definition/description |
|---|---|
| Establish Standardized Armed And Unarmed Guard Qualifications/Training Requirements. | Requirements for these positions should be standardized government wide. |
| **Tenant Assignment** | |
| Co-Locate Agencies With Similar Security Needs. | To capitalize on efficiencies and economies, agencies with like security requirements should be located in the same facility if possible. |
| Do Not Co-Locate High/Low Risk Agencies | Low risk agencies should not take on additional risk by being located with high risk agencies. |
| **Administrative Procedures** | |
| Establish Flexible Work Schedule in High Threat/High Risk Area to Minimize Employee Vulnerability to Criminal Activity. | Flexible work schedules can enhance employee safety by staggering reporting and departure times. As an example flexible schedules might enable employees to park closer to the facility by reducing the demand for parking at peak times of the day. |
| Arrange for Employee Parking In/Near Building After Normal Work Hours. | Minimize exposure to criminal activity by allowing employees to park at or inside the building. |
| Conduct Background Security Checks and/or Establish Security Control Procedures for Service Contract Personnel. | Establish procedures to ensure security where private contract personnel are concerned. Procedures may be as simple as observation or could include sign-in/escort. Frequent visitors may necessitate a background check with contractor ID issued. |
| **Construction/Renovation** | |
| Install Mylar Film on All Exterior Windows (Shatter Protection). | Application of shatter resistant material to protect personnel and citizens from the hazards of flying glass as a result of impact or explosion. |
| Review Current Projects For Blast Standards. | Design and construction projects should be reviewed if possible, to incorporate current technology and blast standards. Immediate review of ongoing projects may generate savings in the implementation of upgrading to higher blast standards prior to completion of construction. |
| Review/Establish Uniform Standards For Construction. | Review, establish, and implement uniform construction standards as it relates to security considerations. |
| Review/Establish New Design Standard for Blast RESISTANCE. | In smaller facilities or those that lease space, control over design standards may not be possible. However, future site selections should attempt to locate in facilities that do meet standards. New construction of government controlled facilities should review, establish, and implement new design standards for blast resistance. |
| Establish Street Set-Back for New Construction. | Every foot between a potential bomb and a building will dramatically reduce damage and increase the survival rate. Street set-back is always desirable, but should be used in conjunction with barriers in Level IV and V facilities. |

(Reproduced from Appendix C, *Classification Table,* U.S. Department of Justice, United States Marshals Service report *Vulnerability Assessment of Federal Facilities*)

| Level | Typical location |
|---|---|
| III | Agency Mix: Government Records. |

## APPENDIX B TO PART 1234—ALTERNATIVE CERTIFIED FIRE-SAFETY DETECTION AND SUPPRESSION SYSTEM(S)

1. *General.* This Appendix B contains information on the Fire-safety Detection and Suppression System(s) tested by NARA through independent live fire testing that are certified to meet the requirement in §1234.12(s) for storage of Federal Records. Use of a system specified in this appendix is optional. A facility may choose to have an alternate fire-safety detection and suppression system approved under §1234.32).

2. *Specifications for NARA facilities using 15 foot high records storage.* NARA fire-safety systems that incorporate all components specified in paragraphs 2.a. through n. of this appendix have been tested and certified to meet the requirements in §1234.12(s) for an acceptable fire-safety detection and suppression system for storage of Federal records.

a. The records storage height must not exceed the nominal 15 feet (±3 inches) records storage height.

b. All records storage and adjoining areas must be protected by automatic wet-pipe

sprinklers. Automatic sprinklers are specified herein because they provide the most effective fire protection for high piled storage of paper records on open type shelving.

c. The sprinkler system must be rated at no higher than 285 degrees Fahrenheit utilizing quick response (QR) fire sprinkler heads and designed by a licensed fire protection engineer to provide the specified density for the most remote 1,500 square feet of floor area at the most remote sprinkler head in accordance with NFPA 13 (incorporated by reference, see §1234.3). For facilities with roofs rated at 15 minutes or greater, provide ½″ QR sprinklers rated at no higher than 285 degrees Fahrenheit designed to deliver a density of 0.30 gpm per square foot. For unrated roofs, provide 0.64″ QR ''large drop'' sprinklers rated at no higher than 285 degrees Fahrenheit. For facilities using 7 or 8 shelf track files, use QR sprinklers rated at no higher than 285 degrees Fahrenheit. For new construction and replacement sprinklers, NARA recommends that the sprinklers be rated at 165 degrees Fahrenheit. Installation of the sprinkler system must be in accordance with NFPA 13 (incorporated by reference, see §1234.3).

d. Maximum spacing of the sprinkler heads must be on a 10-foot grid and the positioning of the heads must provide complete, unobstructed coverage, with a clearance of not less than 18 inches from the top of the highest stored materials.

e. The sprinkler system must be equipped with a water-flow alarm connected to an audible alarm within the facility and to a continuously staffed fire department or an Underwriters Laboratory approved central monitoring station (see UL 827 (incorporated by reference, see §1234.3)) with responsibility for immediate response.

f. A manual fire alarm system must be provided with a Underwriters Laboratory approved (grade A) central monitoring station service or other automatic means of notifying the municipal fire department. A manual alarm pull station must be located adjacent to each exit. Supplemental manual alarm stations are permitted within the records storage areas.

g. All water cutoff valves in the sprinkler system must be equipped with automatic closure alarm (tamper alarm) connected to a continuously staffed station, with responsibility for immediate response. If the sprinkler water cutoff valve is located in an area used by the public, in addition to the tamper alarm, the valves must be provided with frangible (easily broken) padlocks.

h. A dependable water supply free of interruption must be provided including a continuous site fire loop connected to the water main and sized to support the facility with only one portion of the fire loop operational. This normally requires a backup supply system having sufficient pressure and capacity to meet both fire hose and sprinkler requirements for 2-hours. A fire pump connected to an emergency power source must be provided in accordance with NFPA 20 (incorporated by reference, see §1234.3), when adequate water pressure is not assured. In the event that public water mains are not able to supply adequate volumes of water to the site, onsite water storage must be provided.

i. Interior fire hose stations equipped with a 1½ inch diameter hose may be provided in the records storage areas if required by the local fire department, enabling any point in the records storage area to be reached by a 50-foot hose stream from a 100-foot hose lay. If provided, these cabinets must be marked ''For Fire Department Use Only.''

j. Where fire hose cabinets are not required, fire department hose outlets must be provided at each floor landing in the building core or stair shaft. Hose outlets must have an easily removable adapter and cap. Threads and valves must be compatible with the local fire department's equipment. Spacing must be so that any point in the record storage area can be reached with a 50-foot hose stream from a 100-foot hose lay.

k. In addition to the designed sprinkler flow demand, 500 gpm must be provided for hose stream demand. The hose stream demand must be calculated into the system at the base of the main sprinkler riser.

l. Fire hydrants must be located within 250 feet of each exterior entrance or other access to the records storage facility that could be used by firefighters. Each required hydrant must provide a minimum flow capacity of 500 gpm at 20 psi. All hydrants must be at least 50 feet away from the building walls and adjacent to a roadway usable by fire apparatus. Fire hydrants must have at least two, 2½ inch hose outlets and a pumper connection. All threads must be compatible with local standards.

m. Portable water-type fire extinguishers (2½ gallon stored pressure type) must be provided at each fire alarm striking station. The minimum number and locations of fire extinguishers must be as required by NFPA 10 (incorporated by reference, see §1234.3).

n. Single level catwalks without automatic sprinklers installed underneath may be provided in the service aisles if the edges of all files in the front boxes above the catwalks are stored perpendicular to the aisle (to minimize files exfoliation in a fire). Where provided, the walking surface of the catwalks must be of expanded metal at least .09-inch thickness with a 2-inch mesh length. The surface opening ratio must be equal or greater than 0.75. The sprinkler water demand for protection over bays with catwalks where records above the catwalks are not perpendicular to the aisles must be calculated hydraulically to give .30 gpm per square foot for the most remote 2,000 square feet.

# PART 1235—TRANSFER OF RECORDS TO THE NATIONAL ARCHIVES OF THE UNITED STATES

## Subpart A—General Transfer Requirements

Sec.
1235.1 What are the authorities for part 1235?
1235.2 What definitions apply to this part?
1235.3 What standards are used as guidance for this part?
1235.4 What publications are incorporated by reference in this part?
1235.10 What records do agencies transfer to the National Archives of the United States?
1235.12 When must agencies transfer records to the National Archives of the United States?
1235.14 May agencies retain records for the conduct of regular agency business after they are eligible for transfer?
1235.16 How will NARA respond to an agency's request to retain records?
1235.18 How do agencies transfer records to the National Archives of the United States?
1235.20 How do agencies indicate that transferred records contain information that is restricted from public access?
1235.22 When does legal custody of records transfer to NARA?

## Subpart B—Administration of Transferred Records

1235.30 How may records in the National Archives of the United States be used?
1235.32 How does NARA handle restrictions on transferred records?
1235.34 May NARA destroy transferred records?

## Subpart C—Transfer Specifications and Standards

1235.40 What records are covered by additional transfer requirements?
1235.42 What specifications and standards for transfer apply to audiovisual, cartographic, and related records?
1235.44 What general transfer requirements apply to electronic records?
1235.46 What electronic media may be used for transferring records to the National Archives of the United States?
1235.48 What documentation must agencies transfer with electronic records?
1235.50 What specifications and standards for transfer apply to electronic records?

AUTHORITY: 44 U.S.C. 2107 and 2108.

SOURCE: 74 FR 51014, Oct. 2, 2009, unless otherwise noted.

## Subpart A—General Transfer Requirements

### § 1235.1 What are the authorities for part 1235?

The statutory authorities for this part are 44 U.S.C. 2107 and 2108.

### § 1235.2 What definitions apply to this part?

See § 1220.18 of this subchapter for definitions of terms used in part 1235.

### § 1235.3 What standards are used as guidance for this part?

These regulations conform to guidance provided in ISO 15489–1:2001. Paragraphs 8.3 (Designing and implementing records systems), 9.6 (Storage and handling), and 9.7 (Access) are particularly relevant to this part.

### § 1235.4 What publications are incorporated by reference in this part?

(a) Certain material is incorporated by reference into this part with the approval of the Director of the Federal Register under 5 U.S.C. 552(a) and 1 CFR part 51. To enforce any edition other than that specified in this section, the NARA must publish notice of change in the FEDERAL REGISTER and the material must be available to the public. All approved material is available for inspection at the Office of the Federal Register. For information on the availability of this material at the Office of the Federal Register, call 202–741–6030 or go to *http://www.archives.gov/federal_register/code_of_federal_regulations/ibr_locations.html*.

(b) The material incorporated by reference is also available for inspection at NARA's Archives Library Information Center (NWCCA), Room 2380, 8601 Adelphi Road, College Park, MD 20740–6001, phone number (301) 837–3415, and is available for purchase from the sources listed below. If you experience difficulty obtaining the standards referenced below, contact National Archives and Records Administration, Electronic/Special Media Records Services Division (NWME), 8601 Adelphi Road, College Park, MD 20740, phone number (301) 837–1578.

(c) *International Organization for Standards (ISO)*. The following ISO

standards are available from the American National Standards Institute, 25 West 43rd St., 4th Floor, New York, NY 10036, phone number (212) 642–4900, or online at *http://webstore.ansi.org*.

(1) ISO/IEC 15896:1999 (''ISO/IEC 15896''), Information technology—Data interchange on 12,7 mm 208-track magnetic tape cartridges—DLT 5 format, First Edition, December 15, 1999, IBR approved for § 1235.46.

(2) ISO/IEC 16382:2000 (''ISO/IEC 16382''), Information technology—Data interchange on 12,7 mm 208-track magnetic tape cartridges—DLT 6 format, First Edition, May 15, 2000, IBR approved for § 1235.46.

(d) *Document Engineering Co., Inc.* The following standards are available from the standards reseller DECO—Document Engineering Co., Inc., 15210 Stagg Street, Van Nuys, CA, phone number (818) 782–1010, or online at *http://www.doceng.com:*

(1) ANSI X3.39–1986 (''ANSI X3.39''), American National Standard: Recorded Magnetic Tape for Information Interchange (1600 CPI, PE), 1986, IBR approved for § 1235.46.

(2) [Reserved]

(e) The following standards are not available from the original publisher or a standards reseller. As indicated in paragraph (b) of this section, the standards are available for inspection at the NWCCA. In order to inspect the standards at a NARA location other than the NARA facility in College Park, MD, please contact the NWCCA, Room 2380, 8601 Adelphi Road, College Park, MD 20740–6001, phone number (301) 837–3415 or e-mail your request to *alic@nara.gov*.

(1) ANSI X3.54–1986 (''ANSI X3.54''), American National Standard: Recorded Magnetic Tape for Information Interchange (6250 CPI, Group Coded Recording), 1986, IBR approved for § 1235.46.

(2) ANSI X3.180–1990 (''ANSI X3.180''), American National Standard: Magnetic Tape and Cartridge for Information Interchange—18-Track, Parallel, ½ inch (12.65 mm), 37871 cpi (1491 cpmm), Group-Coded—Requirements for Recording, 1990, IBR approved for § 1235.46.

(3) ANSI/NISO/ISO 9660–1990 (''ANSI/NISO/ISO 9660''), American National Standard for Volume and File Structure of CD–ROM for Information Exchange, 1990, IBR approved for § 1235.46.

(4) ISO/IEC 15307:1997 (''ISO/IEC 15307''), Information technology—Data interchange on 12,7 mm 128-track magnetic tape cartridges—DLT 4 format, First Edition, December 1, 1997, IBR approved for § 1235.46.

### § 1235.10 What records do agencies transfer to the National Archives of the United States?

Agencies must transfer to the National Archives of the United States records that have been scheduled as permanent on an SF 115, Request for Records Disposition Authority, records that are designated as permanent in a GRS; and, when appropriate, records that are accretions to holdings (continuations of series already accessioned.)

### § 1235.12 When must agencies transfer records to the National Archives of the United States?

Permanent records must be transferred to the National Archives of the United States when:

(a) The records are eligible for transfer based on the transfer date specified in a NARA-approved records schedule, or

(b) The records have been in existence for more than 30 years (see also § 1235.14).

### § 1235.14 May agencies retain records for the conduct of regular agency business after they are eligible for transfer?

(a) Agencies may retain records longer than specified on a records disposition schedule only with written approval from NARA.

(b) If the agency determines that the records are needed for the conduct of regular business, the records officer must submit to the National Archives and Records Administration, Modern Records Programs (NWM), 8601 Adelphi Road, College Park, MD 20740–6001, phone number (301) 837–1738, a written request certifying continuing need. This certification must:

(1) Include a comprehensive description and location of records to be retained;

(2) Cite the NARA-approved disposition authority;

(3) Describe the current business for which the records are required;

(4) Estimate the length of time the records will be needed (if no date is provided by the agency, approved certification requests will be effective for a maximum of five years);

(5) Explain why agency needs cannot be met by NARA reference services or copies of records deposited in the National Archives of the United States; and

(6) If records are retained to enable routine public reference by the agency rather than NARA, cite the statutory authority authorizing this agency activity.

### § 1235.16 How will NARA respond to an agency's request to retain records?

(a) *Approval.* NARA will provide written approval of the request to retain the records for the specified period within 30 days of receipt of the request.

(b) *Disapproval.* NARA will provide written disapproval of an agency's request within 30 days. Requests will be denied if the agency is retaining the records primarily to:

(1) Provide access services to persons outside the agency that can be provided by NARA, or

(2) Function as an agency archives, unless specifically authorized by statute or by NARA.

### § 1235.18 How do agencies transfer records to the National Archives of the United States?

Agencies transfer records by submitting a signed SF 258, Agreement to Transfer Records to the National Archives of the United States. Each SF 258 must correlate to a specific records series or other aggregation of records, as identified in an item on the SF 115 or cited on the SF 258.

### § 1235.20 How do agencies indicate that transferred records contain information that is restricted from public access?

When completing an SF 258, agencies must indicate restrictions on the use and examination of records and attach a written justification. The justification must cite the statute or Freedom of Information Act (FOIA) exemption (5 U.S.C. 552(b) as amended), that authorizes the restrictions.

### § 1235.22 When does legal custody of records transfer to NARA?

Legal custody of records passes from the agency to NARA when the appropriate NARA official signs the SF 258 acknowledging receipt of the records.

## Subpart B—Administration of Transferred Records

### § 1235.30 How may records in the National Archives of the United States be used?

(a) NARA will enforce restrictions that are consistent with FOIA (5 U.S.C. 552(b) as amended) for both official use of the records by Federal agencies and research by the public.

(b) NARA regulations in Subchapter C of this chapter apply to Federal agency personnel using transferred records for official Government purposes, and to the public at large.

### § 1235.32 How does NARA handle restrictions on transferred records?

(a) *For records less than 30 years old.* Unless required by law, NARA will remove or relax restrictions on transferred records less than 30 years old only with the written concurrence of the transferring agency or, if applicable, its successor agency. If the transferring agency no longer exists, and there is no successor, the Archivist may relax, remove, or impose restrictions to serve the public interest.

(b) *For records more than 30 years old.*

(1) After records are more than 30 years old, most statutory and other restrictions on transferred records expire. NARA, however, after consulting with the transferring agency, may keep the restrictions in force for a longer period.

(2) See part 1256 of this chapter for restrictions on specific categories of records, including national security classified information and information that would invade the privacy of an individual that NARA restricts beyond 30 years.

### § 1235.34 May NARA destroy transferred records?

NARA will not destroy records transferred to NARA's custody except:

(a) With the written concurrence of the agency or its successor, or

(b) As authorized on an SF 258.

## Subpart C—Transfer Specifications and Standards

### § 1235.40 What records are covered by additional transfer requirements?

In addition to complying with subparts A and B of this part, agencies must follow the specifications and requirements in this subpart when transferring audiovisual, cartographic, architectural, and electronic records to the National Archives of the United States. In general, such records must be transferred to the National Archives of the United States as soon as they become inactive or whenever the agency cannot provide proper care and handling of the records, including adequate storage conditions (see parts 1236 and 1237 of this subchapter).

### § 1235.42 What specifications and standards for transfer apply to audiovisual records, cartographic, and related records?

In general the physical types described below comprise the minimum record elements that are needed for future preservation, duplication, and reference for audiovisual records, cartographic records, and related records.

(a) *Motion pictures.*

(1) Agency-sponsored or produced motion picture films (e.g., public information films) whether for public or internal use:

(i) Original negative or color original plus separate optical sound track;

(ii) Intermediate master positive or duplicate negative plus optical track sound track; and,

(iii) Sound projection print and video recording, if they exist.

(2) Agency-acquired motion picture films: Two projection prints in good condition or one projection print and one videotape.

(3) Unedited footage, outtakes, and trims (the discards of film productions) that are properly arranged, labeled, and described and show unstaged, unrehearsed events of historical interest or historically significant phenomena:

(i) Original negative or color original; and

(ii) Matching print or videotape.

(b) *Video recordings.*

(1) For videotape, the original or earliest generation videotape and a copy for reference. Agencies must comply with requirements in § 1237.12(d) of this subchapter for original videotapes, although VHS copies can be transferred as reference copies.

(2) For video discs, the premaster videotape used to manufacture the video disc and two copies of the disc. Agencies must consult the National Archives and Records Administration, Special Media Archives Services Division, (NWCS), 8601 Adelphi Road, College Park, MD 20740, phone number (301) 837–2903, before initiating transfers of video discs that depend on interactive software and nonstandard equipment.

(c) *Still pictures.*

(1) For analog black-and-white photographs, an original negative and a captioned print. The captioning information may be maintained in another file such as a database if the file number correlation is clear. If the original negative is nitrate, unstable acetate, or glass based, the agency must also transfer a duplicate negative on a polyester base.

(2) For analog color photographs, the original color negative, color transparency, or color slide; a captioned print (or captioning information maintained in another file if the file number correlation is clear); and a duplicate negative, or slide, or transparency, if they exist.

(3) For slide sets, the original and a reference set, and the related audio recording (in accordance with paragraph (e) of this section) and script.

(4) For other pictorial records such as posters, original art work, and filmstrips, the original and a reference copy.

(d) *Digital photographic records.* See 36 CFR 1235.48(e) and 1235.50(e) for transfer requirements for digital photographic records.

(e) *Sound recordings.*

(1) Disc recordings.

(i) For electronic recordings, the origination recording regardless of form and two compact discs (CDs) or digital video disks (DVDs).

(ii) For analog disc recordings, the master tape and two disc pressings of each recording, typically a vinyl copy for playback at 33⅓ revolutions per minute (rpm).

(2) For analog audio recordings on magnetic tape (open reel, cassette, or cartridge), the original tape, or the earliest available generation of the recording, and a subsequent generation copy for reference. Agencies must comply with the requirements in 36 CFR 1237.12(c) of this subchapter for audio recordings.

(f) *Finding aids and production documentation.* The following records must be transferred to the National Archives of the United States with the audiovisual records to which they pertain:

(1) Existing finding aids such as data sheets, shot lists, continuities, review sheets, catalogs, indexes, list of captions, and other documentation that are needed or useful to identify or retrieve audiovisual records. Agencies must consult the National Archives and Records Administration, Special Media Archives Services Division (NWCS), 8601 Adelphi Road, College Park, MD 20740, phone number (301) 837–2903, concerning transfer of finding aids that do not meet the requirements of this part for electronic records.

(2) Production case files or similar files that include copies of production contracts, scripts, transcripts, and appropriate documentation bearing on the origin, acquisition, release, and ownership of the production.

(g) *Maps and charts.*

(1) Manuscript maps; printed and processed maps on which manuscript changes, additions, or annotations have been made for record purposes or which bear manuscript signatures to indicate official approval; and single printed or processed maps that have been attached to or interfiled with other documents of a record character or in any way made an integral part of a record.

(2) Master sets of printed or processed maps issued by the agency. A master set must include one copy of each edition of a printed or processed map issued.

(3) Paper copies of computer-related and computer-plotted maps that can no longer be reproduced electronically.

(4) Index maps, card indexes, lists, catalogs, or other finding aids that may be helpful in using the maps transferred.

(5) Records related to preparing, compiling, editing, or printing maps, such as manuscript field notebooks of surveys, triangulation and other geodetic computations, and project folders containing agency specifications for creating the maps.

(h) *Aerial photography and remote sensing imagery, including:*

(1) Vertical and oblique negative aerial film created using conventional aircraft.

(2) Annotated copy negatives, internegatives, rectified negatives, and glass plate negatives from vertical and oblique aerial film created using conventional aircraft.

(3) Annotated prints from aerial film created using conventional aircraft.

(4) Infrared, ultraviolet, multispectral (multiband), video, imagery radar, and related tapes, converted to a film base.

(5) Indexes and other finding aids in the form of photo mosaics, flight line indexes, coded grids, and coordinate grids.

(i) *Architectural and related engineering drawings, including:*

(1) Design drawings, preliminary and presentation drawings, and models that document the evolution of the design of a building or structure.

(2) Master sets of drawings that document both the initial design and construction and subsequent alterations of a building or structure. This category includes final working drawings, ''as-built'' drawings, shop drawings, and repair and alteration drawings.

(3) Drawings of repetitive or standard details of one or more buildings or structures.

(4) ''Measured'' drawings of existing buildings and original or photocopies of drawings reviewed for approval.

(5) Related finding aids and specifications to be followed.

(j) *Digital geospatial data records*. See § 1235.48(c) for transfer requirements for digital geospatial data records.

### § 1235.44 What general transfer requirements apply to electronic records?

(a) Each agency must retain a copy of permanent electronic records that it transfers to NARA until it receives official notification that NARA has assumed responsibility for continuing preservation of the records.

(b) For guidance related to the transfer of electronic records other than those covered in this subpart, the agency must consult with the National Archives and Records Administration, Electronic/Special Media Records Services Division (NWME), 8601 Adelphi Road, College Park, MD 20740, phone number (301) 837–3420.

(c) When transferring digital photographs and their accompanying metatdata, the agency must consult with the National Archives and Records Administration, Special Media Archives Services Division (NWCS) for digital photographs, 8601 Adelphi Road, College Park, MD 20740, phone number (301) 837–2903.

### § 1235.46 What electronic media may be used for transferring records to the National Archives of the United States?

(a) *General*. This section specifies the media or method used to transfer permanent records to the National Archives of the United States. (See 36 CFR 1236.28 for the requirements governing the selection of electronic records storage media for current agency use.) The agency must use only media that is are sound and free from defects for transfers to the National Archives of the United States. When permanent electronic records may be disseminated through multiple electronic media (e.g., magnetic tape, CD–ROM) or mechanisms (e.g., FTP), the agency and NARA must agree on the most appropriate medium or method for transfer of the records into the National Archives of the United States.

(b) *Magnetic tape*. Agencies may transfer electronic records to the National Archives of the United States on magnetic tape as follows:

(1) Open-reel magnetic tape must be on ½-inch 9-track tape reels recorded at 1600 or 6250 bpi that meet ANSI X3.39 or ANSI X3.54 (both incorporated by reference, see § 1235.4), respectively.

(2) 18-track 3480-class cartridges must be recorded at 37,871 bpi that meet ANSI X3.180 (incorporated by reference see, § 1235.4). The data must be blocked at no more than 32,760 bytes per block.

(3) For DLT tape IV cartridges, the data must be blocked at no more than 32,760 bytes per block and must conform to the standards cited in the table as follows:

| If you are copying the records on . . . | . . . then, the standard below applies. |
|---|---|
| DLTtape IV with a DLT 4000 drive . . . | ISO/IEC 15307 (incorporated by reference see, § 1235.4). |
| DLTtape IV with a DLT 7000 drive . . . | ISO/IEC 15896 (incorporated by reference see, § 1235.4). |
| DLTtape IV with a DLT 8000 drive . . . | ISO/IEC 16382 (incorporated by reference see, § 1235.4). |

(c) *Compact-Disk, Read Only Memory (CD–ROM) and Digital Video Disks (DVDs)*. Agencies may use CD–ROMs and DVDs to transfer permanent electronic records to the National Archives of the United States.

(1) CD–ROMs used for this purpose must conform to ANSI/NISO/ISO 9660 (incorporated by reference, see § 1235.4).

(2) Permanent electronic records must be stored in discrete files. Transferred CD–ROMs and DVDs may contain other files, such as software or temporary records, but all permanent records must be in files that contain only permanent records. Agencies must indicate at the time of transfer if a CD–ROM or DVD contains temporary records and where those records are located on the CD–ROM or DVD. The agency must also specify whether NARA should return the CD–ROM or DVD to the agency or dispose of it after copying the permanent records to an archival medium.

(3) If permanent electronic records are stored on both CD–ROM (or DVD) and other media, such as magnetic

tape, the agency and NARA must agree on the medium that will be used to transfer the records into the National Archives of the United States.

(d) *File Transfer Protocol.* Agencies may use File Transfer Protocol (FTP) to transfer permanent electronic records to the National Archives of the United States only with NARA's approval. Several important factors may limit the use of FTP as a transfer method, including the number of records, record file size, and available bandwidth. Agencies must contact the National Archives and Records Administration, Special Media Archives Services Division (NWCS), 8601 Adelphi Road, College Park, MD 20740, phone number (301) 837–2903, or the National Archives and Records Administration, Electronic/Special Media Records Services Division (NWME), 8601 Adelphi Road, College Park, MD 20740, phone number (301) 837–1578, to initiate the transfer discussions. Each transfer of electronic records via FTP must be preceded with a signed SF 258 sent to NWME.

(1) FTP file structure may use the 64-character Joliet extension naming convention only when letters, numbers, dashes (–), and underscores (_____) are used in the file and/or directory names, with a slash (/) used to indicate directory structures. Otherwise, FTP file structure must conform to an 8.3 file naming convention and file directory structure as cited in ANSI/NISO/ISO 9660 (incorporated by reference, see § 1235.4).

(2) Permanent electronic records must be transferred in discrete files, separate from temporary files. All permanent records must be transferred in files that contain only permanent records.

### § 1235.48 What documentation must agencies transfer with electronic records?

(a) *General.* Agencies must transfer documentation adequate to identify, service, and interpret the permanent electronic records This documentation must include completed NARA Form 14097, Technical Description for Transfer of Electronic Records, for magnetic tape media, and a completed NARA Form 14028, Information System Description Form, or their equivalents. Agencies must submit the required documentation, if electronic, in an electronic form that conforms to the provisions of this section.

(b) *Data files.* Documentation for data files and data bases must include record layouts, data element definitions, and code translation tables (codebooks) for coded data. Data element definitions, codes used to represent data values, and interpretations of these codes must match the actual format and codes as transferred.

(c) *Digital geospatial data files.* Digital geospatial data files must include the documentation specified in paragraph (b) of this section. In addition, documentation for digital geospatial data files can include metadata that conforms to the Federal Geographic Data Committee's Content Standards for Digital Geospatial Metadata, as specified in Executive Order 12906 of April 11, 1994 (3 CFR, 1995 Comp., p. 882) (Federal geographic data standards are available at *http://www.fgdc.gov/standards/standards_publications*).

(d) *Documents containing SGML tags.* Documentation for electronic files containing textual documents with SGML tags must include a table for interpreting the SGML tags, when appropriate.

(e) *Electronic records in other formats.*

(1) This paragraph (e) applies to the documentation for the following types of electronic records:

(i) E-mail messages with attachments;

(ii) Scanned images of textual records;

(iii) Records in portable document format (PDF);

(iv) Digital photographic records; and

(v) Web content records.

(2) Guidance on the documentation for electronic records in these formats are available on the NARA Electronic Records Management Initiative Web page at *http://www.archives.gov/records-mgmt/initiatives/transfer-to-nara.html* or from the National Archives and Records Administration, Special Media Archives Services Division (NWCS), 8601 Adelphi Road, College Park, MD 20740, phone number (301) 837–2903 for digital photographs and metadata, or

the National Archives and Records Administration, Electronic/Special Media Records Services Division (NWME), 8601 Adelphi Road, College Park, MD 20740, phone number 301–837–1578, for other electronic records.

### § 1235.50 What specifications and standards for transfer apply to electronic records?

(a) *General.*

(1) Agencies must transfer electronic records in a format that is independent of specific hardware or software. Except as specified in paragraphs (c) through (e) of this section, the records must be written in American Standard Code for Information Interchange (ASCII) or Extended Binary Coded Decimal Interchange Code (EBCDIC) with all control characters and other non-data characters removed. Agencies must consult with the National Archives and Records Administration, Electronic/Special Media Records Services Division (NWME), 8601 Adelphi Road, College Park, MD 20740, phone number (301) 837–1578 about electronic records in other formats.

(2) Agencies must have advance approval from NARA for compression of the records, and agencies must comply with a request from NARA to provide the software to decompress the records.

(3) Agencies interested in transferring scheduled electronic records using a Tape Archive (TAR) utility must contact the National Archives and Records Administration, Electronic/Special Media Records Services Division (NWME), 8601 Adelphi Road, College Park, MD 20740, phone number (301) 837–1578 to initiate transfer discussions.

(b) *Data files and databases.* Data files and databases must be transferred to the National Archives of the United States as flat files or as rectangular tables; *i.e.*, as two-dimensional arrays, lists, or tables. All ''records'' (within the context of the computer program, as opposed to a Federal record) or ''tuples,'' *i.e.*, ordered collections of data items, within a file or table must have the same logical format. Each data element within a record must contain only one data value. A record must not contain nested repeating groups of data items. The file must not contain extraneous control characters, except record length indicators for variable length records, or marks delimiting a data element, field, record, or file. If records or data elements in different files need to be linked or combined, then each record must contain one or more data elements that constitute primary and/or foreign keys enabling valid linkages between the related records in separate files.

(c) *Digital geospatial data files.* Digital spatial data files must be transferred to the National Archives of the United States in a format that complies with a non-proprietary, published open standard maintained by or for a Federal, national, or international standards organization. Acceptable transfer formats include the Geography Markup Language (GML) as defined by the Open GIS Consortium.

(d) *Textual documents.* Electronic textual documents must be transferred as plain ASCII files; however, such files may contain standard markup language such as Standard Generalized Markup Language (SGML) or XML tags.

(e) *Electronic mail, scanned images of textual records, portable document format records, digital photographic records, and Web content records.* For guidance on the transfer of these records to NARA, agencies should consult the transfer requirements available on the NARA Electronic Records Management Initiative Web page at *http://www.archives.gov/records-mgmt/initiatives/transfer-to-nara.html* or contact the National Archives and Records Administration, Special Media Archives Services Division (NWCS), 8601 Adelphi Road, College Park, MD 20740, phone number 301–837–2903 for digital photographs and metadata, or the National Archives and Records Administration, Electronic/Special Media Records Services Division (NWME), 8601 Adelphi Road, College Park, MD 20740, phone number (301) 837–1578, for other electronic records,

## PART 1236—ELECTRONIC RECORDS MANAGEMENT

### Subpart A—General

Sec.

1236.1 What are the authorities for part 1236?

1236.2 What definitions apply to this part?
1236.4 What standards are used as guidance for this part?
1236.6 What are agency responsibilities for electronic records management?

### Subpart B—Records Management and Preservation Considerations for Designing and Implementing Electronic Information Systems

1236.10 What records management controls must agencies establish for records in electronic information systems?
1236.12 What other records management and preservation considerations must be incorporated into the design, development, and implementation of electronic information systems?
1236.14 What must agencies do to protect records against technological obsolescence?

### Subpart C—Additional Requirements for Electronic Records

1236.20 What are appropriate recordkeeping systems for electronic records?
1236.22 What are the additional requirements for managing electronic mail records?
1236.24 What are the additional requirements for managing unstructured electronic records?
1236.26 What actions must agencies take to maintain electronic information systems?
1236.28 What additional requirements apply to the selection and maintenance of electronic records storage media for permanent records?

AUTHORITY: 44 U.S.C. 2904, 3101, 3102, and 3105.

SOURCE: 74 FR 51014, Oct. 2, 2009, unless otherwise noted.

## Subpart A—General

### § 1236.1 What are the authorities for part 1236?

The statutory authority for this part is 44 U.S.C. 2904, 3101, 3102, and 3105. OMB Circular A–130, Management of Federal Information Resources, applies to records and information systems containing records.

### § 1236.2 What definitions apply to this part?

(a) See § 1220.18 of this subchapter for definitions of terms used throughout Subchapter B, including part 1236.

(b) As used in part 1236—

*Electronic information system* means an information system that contains and provides access to computerized Federal records and other information.

*Electronic mail system* means a computer application used to create, receive, and transmit messages and other documents. Excluded from this definition are file transfer utilities (software that transmits files between users but does not retain any transmission data), data systems used to collect and process data that have been organized into data files or data bases on either personal computers or mainframe computers, and word processing documents not transmitted on an e-mail system.

*Metadata* consists of preserved contextual information describing the history, tracking, and/or management of an electronic document.

*Unstructured electronic records* means records created using office automation applications such as electronic mail and other messaging applications, word processing, or presentation software.

### § 1236.4 What standards are used as guidance for this part?

These regulations conform with ISO 15489–1:2001. Paragraph 9.6 (Storage and handling) is relevant to this part.

### § 1236.6 What are agency responsibilities for electronic records management?

Agencies must:

(a) Incorporate management of electronic records into the records management activities required by parts 1220–1235 of this subchapter;

(b) Integrate records management and preservation considerations into the design, development, enhancement, and implementation of electronic information systems in accordance with subpart B of this part; and

(c) Appropriately manage electronic records in accordance with subpart C of this part.

## Subpart B—Records Management and Preservation Considerations for Designing and Implementing Electronic Information Systems

### § 1236.10 What records management controls must agencies establish for records in electronic information systems?

The following types of records management controls are needed to ensure that Federal records in electronic information systems can provide adequate and proper documentation of agency business for as long as the information is needed. Agencies must incorporate controls into the electronic information system or integrate them into a recordkeeping system that is external to the information system itself (see § 1236.20 of this part).

(a) *Reliability:* Controls to ensure a full and accurate representation of the transactions, activities or facts to which they attest and can be depended upon in the course of subsequent transactions or activities.

(b) *Authenticity:* Controls to protect against unauthorized addition, deletion, alteration, use, and concealment.

(c) *Integrity:* Controls, such as audit trails, to ensure records are complete and unaltered.

(d) *Usability:* Mechanisms to ensure records can be located, retrieved, presented, and interpreted.

(e) *Content:* Mechanisms to preserve the information contained within the record itself that was produced by the creator of the record;

(f) *Context:* Mechanisms to implement cross-references to related records that show the organizational, functional, and operational circumstances about the record, which will vary depending upon the business, legal, and regulatory requirements of the business activity; and

(g) Structure: controls to ensure the maintenance of the physical and logical format of the records and the relationships between the data elements.

### § 1236.12 What other records management and preservation considerations must be incorporated into the design, development, and implementation of electronic information systems?

As part of the capital planning and systems development life cycle processes, agencies must ensure:

(a) That records management controls (see § 1236.10) are planned and implemented in the system;

(b) That all records in the system will be retrievable and usable for as long as needed to conduct agency business (i.e., for their NARA-approved retention period). Where the records will need to be retained beyond the planned life of the system, agencies must plan and budget for the migration of records and their associated metadata to new storage media or formats in order to avoid loss due to media decay or technology obsolescence. (See § 1236.14.)

(c) The transfer of permanent records to NARA in accordance with part 1235 of this subchapter.

(d) Provision of a standard interchange format (e.g., ASCII or XML) when needed to permit the exchange of electronic documents between offices using different software or operating systems.

### § 1236.14 What must agencies do to protect records against technological obsolescence?

Agencies must design and implement migration strategies to counteract hardware and software dependencies of electronic records whenever the records must be maintained and used beyond the life of the information system in which the records are originally created or captured. To successfully protect records against technological obsolescence, agencies must:

(a) Determine if the NARA-approved retention period for the records will be longer than the life of the system where they are currently stored. If so, plan for the migration of the records to a new system before the current system is retired.

(b) Carry out upgrades of hardware and software in such a way as to retain the functionality and integrity of the

electronic records created in them. Retention of record functionality and integrity requires:

(1) Retaining the records in a usable format until their authorized disposition date. Where migration includes conversion of records, ensure that the authorized disposition of the records can be implemented after conversion;

(2) Any necessary conversion of storage media to provide compatibility with current hardware and software; and

(3) Maintaining a link between records and their metadata through conversion or migration, including capture of all relevant associated metadata at the point of migration (for both the records and the migration process).

(c) Ensure that migration strategies address non-active electronic records that are stored off-line.

## Subpart C—Additional Requirements for Electronic Records

### § 1236.20 What are appropriate recordkeeping systems for electronic records?

(a) *General*. Agencies must use electronic or paper recordkeeping systems or a combination of those systems, depending on their business needs, for managing their records. Transitory e-mail may be managed as specified in § 1236.22(c).

(b) *Electronic recordkeeping*. Recordkeeping functionality may be built into the electronic information system or records can be transferred to an electronic recordkeeping repository, such as a DoD–5015.2 STD-certified product. The following functionalities are necessary for electronic recordkeeping:

(1) *Declare records*. Assign unique identifiers to records.

(2) *Capture records*. Import records from other sources, manually enter records into the system, or link records to other systems.

(3) *Organize records*. Associate with an approved records schedule and disposition instruction.

(4) *Maintain records security*. Prevent the unauthorized access, modification, or deletion of declared records, and ensure that appropriate audit trails are in place to track use of the records.

(5) *Manage access and retrieval*. Establish the appropriate rights for users to access the records and facilitate the search and retrieval of records.

(6) *Preserve records*. Ensure that all records in the system are retrievable and usable for as long as needed to conduct agency business and to meet NARA-approved dispositions. Agencies must develop procedures to enable the migration of records and their associated metadata to new storage media or formats in order to avoid loss due to media decay or technology obsolescence.

(7) *Execute disposition*. Identify and effect the transfer of permanent records to NARA based on approved records schedules. Identify and delete temporary records that are eligible for disposal. Apply records hold or freeze on disposition when required.

(c) *Backup systems*. System and file backup processes and media do not provide the appropriate recordkeeping functionalities and must not be used as the agency electronic recordkeeping system.

### § 1236.22 What are the additional requirements for managing electronic mail records?

(a) Agencies must issue instructions to staff on the following retention and management requirements for electronic mail records:

(1) The names of sender and all addressee(s) and date the message was sent must be preserved for each electronic mail record in order for the context of the message to be understood. The agency may determine that other metadata is needed to meet agency business needs, e.g., receipt information.

(2) Attachments to electronic mail messages that are an integral part of the record must be preserved as part of the electronic mail record or linked to the electronic mail record with other related records.

(3) If the electronic mail system identifies users by codes or nicknames or identifies addressees only by the name of a distribution list, retain the intelligent or full names on directories or

distributions lists to ensure identification of the sender and addressee(s) of messages that are records.

(4) Some e-mail systems provide calendars and task lists for users. These may meet the definition of Federal record. Calendars that meet the definition of Federal records are to be managed in accordance with the provisions of GRS 23, Item 5.

(5) Draft documents that are circulated on electronic mail systems may be records if they meet the criteria specified in 36 CFR 1222.10(b) of this subchapter.

(b) Agencies that allow employees to send and receive official electronic mail messages using a system not operated by the agency must ensure that Federal records sent or received on such systems are preserved in the appropriate agency recordkeeping system.

(c) Agencies may elect to manage electronic mail records with very short-term NARA-approved retention periods (transitory records with a very short-term retention period of 180 days or less as provided by GRS 23, Item 7, or by a NARA-approved agency records schedule) on the electronic mail system itself, without the need to copy the record to a paper or electronic recordkeeping system, provided that:

(1) Users do not delete the messages before the expiration of the NARA-approved retention period, and

(2) The system's automatic deletion rules ensure preservation of the records until the expiration of the NARA-approved retention period.

(d) Except for those electronic mail records within the scope of paragraph (c) of this section:

(1) Agencies must not use an electronic mail system to store the recordkeeping copy of electronic mail messages identified as Federal records unless that system has all of the features specified in § 1236.20(b) of this part.

(2) If the electronic mail system is not designed to be a recordkeeping system, agencies must instruct staff on how to copy Federal records from the electronic mail system to a recordkeeping system.

(e) Agencies that retain permanent electronic mail records scheduled for transfer to the National Archives must either store them in a format and on a medium that conforms to the requirements concerning transfer at 36 CFR part 1235 or maintain the ability to convert the records to the required format and medium at the time transfer is scheduled.

(f) Agencies that maintain paper recordkeeping systems must print and file their electronic mail records with the related transmission and receipt data specified by the agency's electronic mail instructions.

### § 1236.24 What are the additional requirements for managing unstructured electronic records?

(a) Agencies that manage unstructured electronic records electronically must ensure that the records are filed in a recordkeeping system that meets the requirements in § 1236.10, except that transitory e-mail may be managed in accordance with § 1236.22(c).

(b) Agencies that maintain paper files as their recordkeeping systems must establish policies and issue instructions to staff to ensure that unstructured records are printed out for filing in a way that captures any pertinent hidden text (such as comment fields) or structural relationships (e.g., among worksheets in spreadsheets or other complex documents) required to meet agency business needs.

### § 1236.26 What actions must agencies take to maintain electronic information systems?

(a) Agencies must maintain inventories of electronic information systems and review the systems periodically for conformance to established agency procedures, standards, and policies as part of the periodic reviews required by 44 U.S.C. 3506. The review should determine if the records have been properly identified and described, and if the schedule descriptions and retention periods reflect the current informational content and use. If not, agencies must submit an SF 115, Request for Records Disposition Authority, to NARA.

(b) Agencies must maintain up-to-date documentation about electronic information systems that is adequate to:

(1) Specify all technical characteristics necessary for reading and processing the records contained in the system;

(2) Identify all inputs and outputs;

(3) Define the contents of the files and records;

(4) Determine restrictions on access and use;

(5) Understand the purpose(s) and function(s) of the system;

(6) Describe update cycles or conditions and rules for adding, changing, or deleting information in the system; and

(7) Ensure the timely, authorized disposition of the records.

### § 1236.28 What additional requirements apply to the selection and maintenance of electronic records storage media for permanent records?

(a) Agencies must maintain the storage and test areas for electronic records storage media containing permanent and unscheduled records within the following temperature and relative humidity ranges:

(1) Temperature—62° to 68 °F.

(2) Relative humidity—35% to 45%.

(b) Electronic media storage libraries and test or evaluation areas that contain permanent or unscheduled records must be smoke-free.

(c) For additional guidance on the maintenance and storage of CDs and DVDS, agencies may consult the National Institute of Standards and Technology (NIST) Special Publication 500–252, Care and Handling of CDs and DVDs at *http://www.itl.nist.gov/iad/894.05/papers/CDandDVDCareandHandlingGuide.pdf*, contact phone number (301) 975–6478.

(d) Agencies must test magnetic computer tape media no more than 6 months prior to using them to store electronic records that are unscheduled or scheduled for permanent retention. This test should verify that the magnetic computer tape media are free of permanent errors and in compliance with NIST or industry standards.

(e) Agencies must annually read a statistical sample of all magnetic computer tape media containing permanent and unscheduled records to identify any loss of data and to discover and correct the causes of data loss. In magnetic computer tape libraries with 1800 or fewer tape media, a 20% sample or a sample size of 50 media, whichever is larger, should be read. In magnetic computer tape libraries with more than 1800 media, a sample of 384 media should be read. Magnetic computer tape media with 10 or more errors should be replaced and, when possible, lost data must be restored. All other magnetic computer tape media which might have been affected by the same cause (i.e., poor quality tape, high usage, poor environment, improper handling) must be read and corrected as appropriate.

(f) Before the media are 10 years old, agencies must copy permanent or unscheduled data on magnetic records storage media onto tested and verified new electronic media.

## PART 1237—AUDIOVISUAL, CARTOGRAPHIC, AND RELATED RECORDS MANAGEMENT

Sec.

1237.1 What is the applicability and scope of this part?
1237.2 What are the authorities for part 1237?
1237.3 What standards are incorporated by reference for this part?
1237.4 What definitions apply to this part?
1237.10 How must agencies manage their audiovisual, cartographic, and related records?
1237.12 What record elements must be created and preserved for permanent audiovisual records?
1237.14 What are the scheduling requirements for audiovisual, cartographic, and related records?
1237.16 How do agencies store audiovisual records?
1237.18 What are the environmental standards for audiovisual records storage?
1237.20 What are special considerations in the maintenance of audiovisual records?
1237.22 What are special considerations in the storage and maintenance of cartographic and related records?
1237.24 What are the special considerations for storage and maintenance of aerial photographic records?
1237.26 What materials and processes must agencies use to create audiovisual records?
1237.28 What special concerns apply to digital photographs?
1237.30 How do agencies manage records on nitrocellulose-base and cellulose-acetate base film?

AUTHORITY: 44 U.S.C. 2904 and 3101.

SOURCE: 74 FR 51014, Oct. 2, 2009, unless otherwise noted.

### § 1237.1 What is the applicability and scope of this part?

Agencies must manage audiovisual, cartographic, and related records in accordance with parts 1220–1235. This part prescribes additional policies and procedures for managing audiovisual, cartographic, and related records to ensure adequate and proper documentation and authorized, timely, and appropriate disposition.

### § 1237.2 What are the authorities for part 1237?

The authorities for this part are 44 U.S.C. 2904 and 3101.

### § 1237.3 What standards are incorporated by reference in this part?

(a) Certain material is incorporated by reference into this part with the approval of the Director of the Federal Register under 5 U.S.C. 552(a) and 1 CFR part 51. To enforce any edition other than that specified in this section, NARA must publish notice of change in the FEDERAL REGISTER and the material must be available to the public. All approved material is available for inspection at the Office of the Federal Register. For information on the availability of this material at the Office of the Federal Register, call (202) 741–6030 or go to *http://www.archives.gov/federal_register/code_of_federal_regulations/ibr_locations.html*.

(b) The material incorporated by reference is also available for inspection at NARA's Archives Library Information Center (NWCCA), Room 2380, 8601 Adelphi Road, College Park, MD 20740–6001, phone number (301) 837–3415, and is available for purchase from the sources listed below. If you experience difficulty obtaining the standards referenced below, contact NARA's Policy and Planning Staff (NPOL), National Archives and Records Administration, 8601 Adelphi Road, College Park, MD 20740–6001, phone number (301) 837–1850.

(c) *American National Standards Institute (ANSI) and International Organization for Standards (ISO) standards*. The following ANSI and ISO standards are available from the American National Standards Institute, 25 West 43rd St., 4th Floor, New York, NY 10036, phone number (212) 642–4900, or online at *http://webstore.ansi.org*.

(1) ISO 18906: 2000 (''ISO 18906''), Imaging Materials—Photographic Films—Specifications for Safety Film, First Edition, December 15, 2000, IBR approved for § 1237.26.

(2) ISO 18911: 2000 (''ISO 18911''), Imaging materials—Processed safety photographic films—Storage practices, First Edition, November 1, 2000, IBR approved for § 1238.20, IBR approved for §§ 1237.16 and 1237.18.

(3) ISO 18920: 2000 (''ISO 18920''), Imaging Materials—Processed Photographic Reflection Prints—Storage Practices, First Edition, July 15, 2000, IBR approved for § 1237.18.

(4) ANSI/AIIM TR34: 1996 (''ANSI/AIIM TR34''), Sampling Procedures for Inspection by Attributes of Images in Electronic Image Management and Micrographic Systems, May 13, 1996, IBR approved for § 1237.28.

(d) *National Fire Protection Association (NFPA)*. The following standards are available from the National Fire Protection Association, 1 Batterymarch Park, P.O. Box 9109, Quincy, MA 02269–9101, phone number (617) 770–3000 or online at *http://catalog.nfpa.org*.

(1) NFPA 40–2007 (''NFPA 40–2007''), Standard for the Storage and Handling of Cellulose Nitrate Film, 2007, IBR approved for § 1237.30.

(2) Reserved.

(e) *Techstreet*. The following standards are available from the standards reseller Techstreet, 3916 Ranchero Drive, Ann Arbor, MI 48108, phone number (800) 699–9277, or online at *http://www.Techstreet.com*.

(1) ISO 18902: 2001 (''ISO 18902''), Imaging Materials—Processed Photographic Films, Plates, and Papers—Filing Enclosures and Storage Containers, 2001, IBR approved for § 1237.16.

(2) ISO 18923: 2000 (''ISO 18923''), Imaging Materials—Polyester-Base Magnetic Tape—Storage Practices, First Edition, June 1, 2000, IBR approved for § 1237.18.

(3) ISO 18925: 2002 (''ISO 18925''), Imaging Materials—Optical Disc Media—Storage Practices, First Edition, June 1, 2002, IBR approved for § 1237.18.

(f) The following standards are not available from the original publisher or a standards reseller. As indicated in paragraph (b) of this section, the standards are available for inspection at the NWCCA. In order to inspect the standards at a NARA location other than the NARA facility in College Park, MD, please contact the NWCCA, Room 2380, 8601 Adelphi Road, College Park, MD 20740–6001, phone number (301) 837–3415 or e-mail your request to *alic@nara.gov*.

(1) ISO 2859–1: 1996 (''ISO 2859–1''), Sampling Procedures for Inspection by Attributes—Part 1: Sampling Plans Indexed by Acceptable Quality Level (AQL) for Lot-by-Lot Inspection, 1996, IBR approved for § 1237.28.

(2) ANSI/NAPM IT9.11–1993 (''ANSI/NAPM IT9.11–1993''), Imaging Media—Processed Safety Photographic Films—Storage, 1993, IBR approved for § 1237.16.

### § 1237.4 What definitions apply to this part?

(a) See § 1220.18 of this subchapter for definitions of terms used throughout Subchapter B, including part 1237.

(b) As used in part 1237—

*Aerial photographic records* means film-based images of the surface of the earth, of other planetary bodies, or of the atmosphere that have been taken from airborne vehicles or satellites. They include vertical and oblique aerial negative film taken from conventional aircraft as well as copy negatives, internegatives, rectified negatives, and annotated and other prints from these negatives. Also included are infrared, ultraviolet, multispectral, video, and radar imagery that has been converted to a film base. These records also include the relevant index system in whatever form it may exist such as mosaics, flight-line overlays or annotated maps, or electronic data bases capturing the latitude and longitude (or other coordinate-based location data) of individual aerial photographic center points.

*Architectural and engineering records* means graphic records that depict the proposed and actual construction of stationary structures, such as buildings, bridges, and canals as well as movable objects, such as ships, aircraft, vehicles, weapons, machinery, and equipment. These records are also known as design and construction drawings and include closely related indexes and written specifications.

*Audiovisual* means any pictorial or aural means of communicating information, e.g., photographic prints, negatives, slides, digital images, sound recordings, and moving images.

*Audiovisual equipment* means equipment used for recording, producing, duplicating, processing, broadcasting, distributing, storing, or exhibiting audiovisual materials or for providing any audiovisual services.

*Audiovisual production* means an organized and unified presentation, developed according to a plan or script, containing visual imagery, sound, or both, and used to convey information. An audiovisual production generally is a self-contained presentation.

*Audiovisual records* means records in pictorial or aural form, including still photographs and motion media (*i.e.*, moving images whether on motion picture film or as video recordings), sound recordings, graphic works (e.g., printed posters), mixed media, and related finding aids and production files.

*Cartographic records* means graphic representations drawn to scale of selected cultural and physical features of the surface of the earth, of other planetary bodies, and of the atmosphere. They include maps, charts, photomaps, orthophotomaps and images, atlases, cartograms, globes, and relief models. Related records are those that are integral to the map-making process, such as field survey notes, geodetic controls, map history case files, source material, indexes, and finding aids.

### § 1237.10 How must agencies manage their audiovisual, cartographic, and related records?

Each Federal agency must manage its audiovisual, cartographic and related records as required in parts 1220 through 1235. In addition, agencies must:

(a) Prescribe the types of audiovisual, cartographic, and related records to be created and maintained. (See § 1235.42 of this subchapter for transfer requirements for permanent audiovisual records.)

(b) Create and maintain current inventories showing the location of all generations of audiovisual records and all cartographic and related records, especially those not maintained centrally by the agency.

### § 1237.12 What record elements must be created and preserved for permanent audiovisual records?

For permanent audiovisual records, the following record elements must be created or acquired and preserved for transfer into the National Archives of the United States. (See § 1235.42 of this subchapter for transfer requirements for permanent audiovisual records.)

(a) *Motion pictures.*

(1) Agency-sponsored or produced motion picture films (e.g., public information films) whether for public or internal use:

(i) Original negative or color original plus separate optical sound track;

(ii) Intermediate master positive or duplicate negative plus optical track sound track; and,

(iii) Sound projection print and video recording, if both exist.

(2) Agency-acquired motion picture films: Two projection prints in good condition or one projection print and one videotape.

(3) Unedited footage, outtakes and trims (the discards of film productions) that are properly arranged, labeled, and described and show unstaged, unrehearsed events of historical interest or historically significant phenomena:

(i) Original negative or color original; and

(ii) Matching print or videotape.

(b) *Video recordings.*

(1) For analog videotapes, the original or earliest generation videotape using industrial-quality or professional videotapes for originals and a copy for reference.

(2) For video discs, the premaster video used to manufacture the video disc and two copies of the disc.

(c) *Still pictures.*

(1) For analog black-and-white photographs, an original negative and a captioned print or the captioning information maintained in another file such as a data base if the file number correlation is clear. If the original negative is nitrate, unstable acetate, or glass based, a duplicate negative on a polyester base is needed.

(2) For analog color photographs, the original color negative, color transparency, or color slide; a captioned print of the original color negative and/or captioning information in another file such as a data base with a clear correlation to the relevant image; and a duplicate negative, or slide, or transparency.

(3) For slide sets, the original and a reference set, and the related audio recording and script.

(4) For other pictorial records such as posters, original art work, and filmstrips, the original and a reference copy.

(d) *Digital photographic records.* See § 1237.28 for requirements for digital photographs.

(e) *Sound recordings.*

(1) Disc recordings:

(i) For electronic recordings, the origination recording regardless of form and two compact discs (CDs) or digital video disks (DVDs).

(ii) For analog disc recordings, the master tape and two disc pressings of each recording, typically a vinyl copy for playback at 33⅓ revolutions per minute (rpm).

(2) For analog audio recordings on magnetic tape (open reel, cassette, or cartridge), the original tape, or the earliest available generation of the recording, and a subsequent generation copy for reference.

(f) *Finding aids and production documentation.*

(1) Existing finding aids such as data sheets, shot lists, continuities, review sheets, catalogs, indexes, list of captions, and other documentation that identifies the records.

(2) Production case files or similar files that include copies of production contracts, scripts, transcripts, and appropriate documentation bearing on the origin, acquisition, release, and ownership of the production.

### § 1237.14 What are the additional scheduling requirements for audiovisual, cartographic, and related records?

The disposition instructions should also provide that permanent records be transferred to the National Archives of

the United States within 5–10 years after creation (see also 36 CFR part 1235). See § 1235.42 of this subchapter for specifications and standards for transfer to the National Archives of the United States of audiovisual, cartographic, and related records.

### § 1237.16 How do agencies store audiovisual records?

Agencies must maintain appropriate storage conditions for permanent, long-term temporary or unscheduled audiovisual records:

(a) Ensure that audiovisual records storage facilities comply with 36 CFR part 1234.

(b) For the storage of permanent, long-term temporary, or unscheduled records, use audiovisual storage containers or enclosures made of non-corroding metal, inert plastics, paper products and other safe materials recommended in ISO 18902 and ISO 18911 (both incorporated by reference, see § 1237.3);

(c) Store originals and use copies (e.g., negatives and prints) separately, whenever practicable. Store distinct audiovisual record series separately from textual series (e.g., store poster series separately from other kinds of agency publications, or photographic series separately from general reference files). Retain intellectual control through finding aids, annotations, or other descriptive mechanisms;

(d) Store series of permanent and unscheduled x-ray films, i.e, x-rays that are not interspersed among paper records (case files), in accordance with § 1238.20 of this subchapter. Store series of temporary x-ray films under conditions that will ensure their preservation for their full retention period, in accordance with ANSI/PIMA IT9.11–1993 (incorporated by reference, see § 1237.3);

(e) Store posters and similar graphic works in oversize formats, in map cases, hanging files, or other enclosures that are sufficiently large or flexible to accommodate the records without rolling, folding, bending, or other ways that compromise image integrity and stability; and

(f) Store optical disks in individual containers and use felt-tip, water-based markers for disk labeling.

### § 1237.18 What are the environmental standards for audiovisual records storage?

(a) *Photographic film and prints.* The requirements in this paragraph apply to permanent, long-term temporary, and unscheduled audiovisual records.

(1) *General guidance.* Keep all film in cold storage following guidance by the International Organization for Standardization in ISO 18911 (incorporated by reference, see § 1237.3). See also ISO 18920 (incorporated by reference, see § 1237.3).

(2) *Color images and acetate-based media.* Keep in an area maintained below 40 degrees Fahrenheit with 20–40% relative humidity to retard the fading of color images and the deterioration of acetate-based media.

(b) *Digital images on magnetic tape.* For digital images stored on magnetic tape, keep in an area maintained at a constant temperature range of 62 degrees Fahrenheit to 68 degrees Fahrenheit, with constant relative humidity from 35% to 45%. See also the recommendations in ISO 18923 (incorporated by reference, see § 1237.3); and the requirements for electronic records storage in 36 CFR 1236.28.

(c) *Digital images on optical media.* For permanent, long-term temporary, or unscheduled digital images maintained on optical media (e.g., CDs, DVDs), use the recommended storage temperature and humidity levels stated in ISO 18925 (incorporated by reference, see § 1237.3).

### § 1237.20 What are special considerations in the maintenance of audiovisual records?

Agencies must:

(a) Handle audiovisual records in accordance with commonly accepted industry practices.

(b) Protect audiovisual records, including those recorded on digital media or magnetic sound or video media, from accidental or deliberate alteration or erasure.

(c) If different versions of audiovisual productions (e.g., short and long versions or foreign-language versions) are prepared, keep an unaltered copy of each version for record purposes.

(d) Link audiovisual records with their finding aids, including captions

and published and unpublished catalogs, inventories, indexes, and production files and similar documentation created in the course of audiovisual production. Establish and communicate agency-wide, clear captioning standards, procedures, and responsibilities.

(e) Maintain current and accessible documentation identifying creators of audiovisual products, their precise relationship to the agency, and the nature and status of copyright or other rights affecting the present and future use of items acquired from sources outside the agency. (See § 1222.32 of this subchapter for requirements to ensure agency ownership of appropriate contractor produced records.)

(f) Create unique identifiers for all audiovisual records (e.g., for digital files, use file naming conventions), that clarify connections between related elements (e.g., photographic prints and negatives, or original edited masters and dubbing for video and audio recordings), and that associate records with the relevant creating, sponsoring, or requesting offices.

(g) Maintain temporary and permanent audiovisual records separately.

(h) Require that personnel wear white lint-free cotton (or other approved) gloves when handling film.

### § 1237.22 What are special considerations in the storage and maintenance of cartographic and related records?

Agencies must:

(a) Maintain permanent and unscheduled cartographic, architectural, and engineering records in an environment that does not exceed 70 degrees Fahrenheit and with relative humidity under 50%.

(b) Create an identification scheme for each series and assign unique identification designations to each item within a series.

(c) Maintain lists or indexes for each series with cross-references to related textual records.

(d) Avoid interfiling separate series of maps, charts, or drawings, and file permanent cartographic and architectural records separately from temporary series unless hand-corrected versions have been systematically filed with other published maps in a central or master file.

(e) Avoid rolling and folding maps and drawings. Store permanent maps and drawings flat in shallow drawer map cases in acid-free folders.

(f) Do not laminate original oversize records. Consult the National Archives and Records Administration, Preservation Programs, (NWT), 8601 Adelphi Road, College Park, MD 20740, phone number (301) 837–1785 for preservation, storage, and treatment options.

### § 1237.24 What are special considerations for storage and maintenance of aerial photographic records?

(a) Mark each aerial film container with a unique identification code to facilitate identification and filing.

(b) Mark aerial film indexes with the unique aerial film identification codes or container codes for the aerial film that they index. Also, file and mark the aerial indexes in such a way that they can easily be retrieved by area covered.

### § 1237.26 What materials and processes must agencies use to create audiovisual records?

Agencies must:

(a) For picture negatives and motion picture preprints (negatives, masters, and all other copies) of permanent, long-term temporary, or unscheduled records, use polyester base media and process in accordance with industry standards as specified in ISO 18906 (incorporated by reference, see § 1237.3).

(1) Ensure that residual sodium thiosulfate (hypo) on newly processed black-and-white photographic film does not exceed 0.014 grams per square meter.

(2) Require laboratories to process film in accordance with this standard. Process color film in accordance with the manufacturer's recommendations.

(3) If using reversal type processing, require full photographic reversal; *i.e.*, develop, bleach, expose, develop, fix, and wash.

(b) Avoid using motion pictures in a final ''A & B'' format (two precisely matched reels designed to be printed together) for the reproduction of excerpts or stock footage.

(c) Use only industrial or professional video and audio recording equipment,

new and previously unrecorded magnetic tape stock and blank optical media (e.g., DVD and CD), for original copies of permanent, long-term temporary, or unscheduled recordings. Limit the use of consumer formats to distribution or reference copies or to subjects scheduled for destruction. Avoid using videocassettes in the VHS format for use as originals of permanent or unscheduled records.

(d) Record permanent, long-term, temporary, or unscheduled audio recordings on optical media from major manufacturers. Avoid using cassettes as originals for permanent records or unscheduled records (although they may be used as reference copies).

(e) For born-digital or scanned digital images that are scheduled as permanent or unscheduled, a record (or master) version of each image must be comparable in quality to a 35 mm film photograph or better, and must be saved in Tagged Image File Format (TIFF) or JPEG File Interchange Format (JFIF, JPEG). For more detailed requirements on image format and resolution, see §1235.48(e) of this subchapter. For temporary digital photographs, agencies select formats that they deem most suitable for fulfillment of business needs.

### § 1237.28 What special concerns apply to digital photographs?

Digital photographs, either originating in digital form (''born-digital'') or scanned from photographic prints, slides, and negatives, are subject to the provisions of this part and the requirements of 36 CFR part 1236, and NARA guidance for transfer of digital photographs located on the following NARA Web page—*http://www.archives.gov/records-mgmt/initiatives/digital-photo-records.html*. In managing digital photographs, agency and contractor personnel must:

(a) Schedule digital photographs and related databases as soon as possible for the minimum time needed for agency business and transfer the records promptly according to the disposition instructions on their records schedule.

(b) Select image management software and hardware tools that will meet long-term archival requirements, including transfer to the National Archives of the United States, as well as business needs. Additional information and assistance is available from the National Archives and Records Administration, Modern Records Program (NWM), 8601 Adelphi Road, College Park, MD 20740, phone number (301) 837–1738.

(c) When developing digital image storage strategies, build redundancy into storage systems, backing up image files through on-line approaches, off-line, or combinations of the two. (See also electronic storage requirements in §1236.28 of this subchapter).

(d) For scanned digital images of photographic prints, slides, and negatives that are scheduled as permanent or unscheduled, document the quality control inspection process employed during scanning.

(1) Visually inspect a sample of the images for defects, evaluate the accuracy of finding aids, and verify file header information and file name integrity.

(2) Conduct the sample using a volume sufficiently large to yield statistically valid results, in accordance with one of the quality sampling methods presented in ANSI/AIIM TR34 (incorporated by reference, see §1237.3). (See also ISO 2859–1 (incorporated by reference, see §1237.3).)

(e) For born-digital images scheduled as permanent, long-term temporary, or unscheduled, perform periodic inspections, using sampling methods or more comprehensive verification systems (e.g., checksum programs), to evaluate image file stability, documentation quality, and finding aid reliability. Agencies must also establish procedures for refreshing digital data (recopying) and file migration, especially for images and databases retained for five years or more.

(f) Designate a record set of images that is maintained separately from other versions. Record sets of permanent or unscheduled images that have already been compressed once (e.g., compressed TIFF or first-generation JPEG) must not be subjected to further changes in image size.

(g) Organize record images in logical series. Group permanent digital images separately from temporary digital images.

(h) Document information about digital photographic images as they are produced. For permanent or unscheduled images descriptive elements must include:

(1) An identification number;

(2) Information about image content;

(3) Identity and organizational affiliation of the photographer;

(4) Existence of any copyright or other potential restrictions on image use; and

(5) Technical data including file format and version, bit depth, image size, camera make and model, compression method and level, custom or generic color profiles (ICC/ICM profile), and, where applicable, Exchangeable Image File Format (EXIF) information embedded in the header of image files by certain digital cameras.

(i) Provide a unique file name to identify the digital image.

(j) Develop finding aids sufficiently detailed to ensure efficient and accurate retrieval. Ensure that indexes, caption lists, and assignment logs can be used to identify and chronologically cut-off block of images for transfer to the NARA.

### § 1237.30 How do agencies manage records on nitrocellulose-base and cellulose-acetate base film?

(a) The nitrocellulose base, a substance akin to gun cotton, is chemically unstable and highly flammable. Agencies must handle nitrocellulose-base film (used in the manufacture of sheet film, 35 mm motion pictures, aerial and still photography into the 1950s) as specified below:

(1) Remove nitrocellulose film materials (e.g., 35mm motion picture film and large series of still pictures) from records storage areas.

(2) Notify the National Archives and Records Administration, Modern Records Program (NWM), 8601 Adelphi Road, College Park, MD 20740, phone number (301) 837–1738, about the existence of nitrocellulose film materials for a determination of whether they may be destroyed or retained after a copy is made by the agency for transfer to NARA. If NARA appraises nitrate film materials as disposable and the agency wishes to retain them, the agency must follow the standard NFPA 40–2007 (incorporated by reference, see § 1237.3).

(3) Follow the packing and shipping of nitrate film as specified in Department of Transportation regulations (49 CFR 172.101, Hazardous materials table; 172.504, Transportation; 173.24, Standard requirements for all packages; and 173.177, Motion picture film and X-ray film—nitrocellulose base).

(b) Agencies must inspect cellulose-acetate film periodically for an acetic odor, wrinkling, or the presence of crystalline deposits on the edge or surface of the film that indicate deterioration. Agencies must notify the National Archives and Records Administration, Modern Records Program (NWM), 8601 Adelphi Road, College Park, MD 20740, phone number (301) 837–1738, immediately after inspection about deteriorating permanent or unscheduled audiovisual records composed of cellulose acetate so that they can be copied by the agency prior to transfer of the original and duplicate film to NARA.

## PART 1238—MICROFORMS RECORDS MANAGEMENT

### Subpart A—General

Sec.
1238.1 What is the scope of this part?
1238.2 What are the authorities for part 1238?
1238.3 What definitions apply to this part?
1238.4 What standards are used as guidance for this part?
1238.5 What publications are incorporated by reference?

### Subpart B—Microfilming Standards

1238.10 What are the format standards for microfilming records?
1238.12 What documentation is required for microfilmed records?
1238.14 What are the microfilming requirements for permanent and unscheduled records?
1238.16 What are the microfilming requirements for temporary records, duplicates, and user copies?

### Subpart C—Storage, Use, and Disposition Standards for Microform Records

1238.20 How must microforms records be stored?

1238.22 What are the inspection requirements for permanent and unscheduled microform records?
1238.24 What are NARA inspection requirements for temporary microform records?
1238.26 What are the restrictions on use for permanent and unscheduled microform records?
1238.28 What must agencies do when sending permanent microform records to a records storage facility?
1238.30 What must agencies do when transferring permanent microform records to the National Archives of the United States?
1238.32 Do agencies need to request NARA approval for the disposition of all microform and source records?

AUTHORITY: 44 U.S.C. chapters 29 and 33.

SOURCE: 74 FR 51014, Oct. 2, 2009, unless otherwise noted.

## Subpart A—General

### § 1238.1 What is the scope of this part?

This part covers the standards and procedures for using micrographic technology in the management of Federal records.

### § 1238.2 What are the authorities for part 1238?

The statutory authorities for this part are 44 U.S.C. chapters 29 and 33.

### § 1238.3 What definitions apply to this part?

See § 1220.18 of this subchapter for definitions of terms used in part 1238.

### § 1238.4 What standards are used as guidance for this part?

These regulations conform with guidance provided in ISO15489–1:2001, part 7.1 (Principles of records management programmes), and 9.6 (storage and handling).

### § 1238.5 What publications are incorporated by reference in this part?

(a) Certain material is incorporated by reference into this part with the approval of the Director of the Federal Register under 5 U.S.C. 552(a) and 1 CFR part 51. To enforce any edition other than that specified in this section, NARA must publish notice of change in the FEDERAL REGISTER and the material must be available to the public. All approved material is available for inspection at the Office of the Federal Register. For information on the availability of this material at the Office of the Federal Register, call (202) 741–6030 or go to *http://www.archives.gov/federal_register/code_of_federal_regulations/ibr_locations.html*.

(b) The material incorporated by reference is also available for inspection at NARA's Archives Library Information Center (NWCCA), Room 2380, 8601 Adelphi Road, College Park, MD 20740–6001, phone number (301) 837–3415, and is available for purchase from the sources listed below. If you experience difficulty obtaining the standards referenced below, contact NARA's Policy and Planning Staff (NPOL), National Archives and Records Administration, 8601 Adelphi Road, College Park, MD 20740–6001, phone number (301) 837–1850.

(c) *American National Standards Institute (ANSI) and International Organization for Standards (ISO) standards*. The following ANSI and ISO standards are available from the American National Standards Institute, 25 West 43rd St., 4th Floor, New York, NY 10036, phone number (212) 642–4900,or online at *http://webstore.ansi.org*.

(1) ANSI/AIIM MS1–1996 (''ANSI/AIIM MS1''), Standard Recommended Practice for Alphanumeric Computer-Output Microforms—Operational Practices for Inspection and Quality Control, August 8, 1996, IBR approved for § 1238.14.

(2) ANSI/AIIM MS5–R1998) (''ANSI/AIIM MS5''), Standard for Information and Image Management—Microfiche, December, 1998, IBR approved for § 1238.10.

(3) ANSI/AIIM MS14–1996 (''ANSI/AIIM MS14''), Standard Recommended Practice—Specifications for 16mm and 35mm Roll Microfilm, August 8, 1996, IBR approved for § 1238.10.

(4) ANSI/AIIM MS19–1993 (''ANSI/AIIM MS19''), Standard Recommended Practice—Identification of Microforms, August 18, 1993, IBR approved for § 1238.12.

(5) ANSI/AIIM MS32–1996 (''ANSI/AIIM MS32''), Standard Recommended Practice—Microrecording of Engineering Source Documents on 35mm Microfilm, February 16, 1996, IBR approved for § 1238.10.

(6) ANSI/AIIM MS41–1996 (''ANSI/AIIM MS41''), Dimensions of Unitized Microfilm Carriers and Apertures (Aperture, Camera, Copy and Image Cards), July 16, 1996, IBR approved for § 1238.10.

(7) ANSI/AIIM MS43–1998 (''ANSI/AIIM MS43''), Standard Recommended Practice—Operational Procedures—Inspection and Quality Control of Duplicate Microforms of Documents and From COM), June 2, 1998, IBR approved for § 1238.14,

(8) ANSI/AIIM MS45–1990 (''ANSI/AIIM MS 45''), Recommended Practice for Inspection of Stored Silver-Gelatin Microforms for Evidence of Deterioration, January 22, 1990, IBR approved for § 1238.22.

(9) ISO 18911:2000 (''ISO 18911''), Imaging materials—Processed safety photographic films—Storage practices, First Edition, November 1, 2000, IBR approved for § 1238.20.

(d) *Techstreet*. The following standards are available from the standards reseller Techstreet, 3916 Ranchero Drive, Ann Arbor, MI 48108, phone number (800) 699–9277, or online at *www.Techstreet.com*.

(1) ISO 18901:2002 (''ISO 18901''), Imaging Materials—Processed silver-gelatin type black-and-white films—Specifications for stability, February 15, 2002, IBR approved for §§ 1238.10, 1238.14, and 1238.20.

(2) Reserved

(e) *Document Center Inc*. The following are available from the standards reseller the Document Center Inc., 111 Industrial Road, Suite 9, Belmont, CA, 94002, phone number (650) 591–7600, or online at *http://www.document-center.com*.

(1) ANSI/NAPM IT2.19–1994 (''ANSI/NAPM IT2.19), American National Standard for Photography—Density Measurements—Part 2: Geometric Conditions for Transmission Density, February 20, 1995, IBR approved for § 1238.14.

(2) ANSI/PIMA IT9.2–1998 (''ANSI/PIMA IT9.2''), Photographic Processed Films, Plates, and Papers-Filing Enclosures and Storage Containers, April 15, 1998, IBR approved for §§ 1238.10 and 1238.20.

(3) ANSI/AIIM MS 23–1998 (''ANSI/AIIM MS23''), Standard Recommended Practice—Production, Inspection, and Quality Assurance of First-Generation, Silver Microforms of Documents, June 2, 1998, IBR approved for §§ 1238.10 and 1238.14.

(4) ANSI/ISO 3334–1991, ANSI/AIIM MS51–1991 (''ANSI/ISO 3334, ANSI/AIIM MS51''), Micrographics—ISO Resolution Test Chart No. 2—Description and Use, May 10, 1991, IBR approved for § 1238.14.

(5) ANSI/NAPM IT2.18–1996 (''ANSI/NAPM IT2.18''), American National Standard for Photography—Density Measurements—Part 3: Spectral Conditions, March 8, 1996, IBR approved for § 1238.14.

## Subpart B—Microfilming Standards

### § 1238.10 What are the format standards for microfilming records?

The following formats must be used when microfilming records:

(a) *Roll film*—(1) *Source documents*. The formats described in ANSI/AIIM MS14 (incorporated by reference, see § 1238.5) must be used for microfilming source documents on 16mm and 35mm roll film. A reduction ratio no greater than 1:24 is recommended for correspondence or similar typewritten documents. Use ANSI/AIIM MS23 (incorporated by reference, see § 1238.5) for the appropriate reduction ratio and format for meeting image quality requirements. When microfilming on 35mm film for aperture card applications, the format dimensions in ANSI/AIIM MS32 (incorporated by reference, see § 1238.5), Table 1 must be used, and the aperture card format ''D Aperture'' shown in ANSI/AIIM MS41 (incorporated by reference, see § 1238.5), Figure 1, must be used. The components of the aperture card, including the paper and adhesive, must conform to the requirements of ANSI/PIMA IT9.2 (incorporated by reference, see § 1238.5). The 35mm film used in the aperture card application must conform to film designated as LE 500 in ISO 18901 (incorporated by reference, see § 1238.5).

(2) *COM*. Microfilm created using computer output microfilm (COM) technology must use the simplex mode described in ANSI/AIIM MS14 (incorporated by reference, see § 1238.5) at an

effective ratio of 1:24 or 1:48 depending upon the application.

(b) *Microfiche*. When creating microfiche, either by microfilming source documents or using COM technology, the formats and reduction ratios prescribed in ANSI/AIIM MS5 (incorporated by reference, see § 1238.5) must be used as specified for the size and quality of the documents being filmed. Use ANSI/AIIM MS23 (incorporated by reference, see § 1238.5) for determining the appropriate reduction ratio and format for meeting the image quality requirements.

(c) *Index placement*—(1) *Source documents*. When microfilming source documents, place indexes, registers, or other finding aids, if microfilmed, either in the first frames of the first roll of film or in the last frames of the last roll of film of a series. For microfiche, place the indexes in the last frames of the last microfiche or microfilm jacket of a series.

(2) *COM*. Place indexes on COM following the data on a roll of film, in the last frames of a single microfiche, or in the last frames of the last fiche in a series. Other locations for indexes may be used only if dictated by special system constraints.

### § 1238.12 What documentation is required for microfilmed records?

Agencies must ensure that the microforms capture all information contained on the source documents and that they can be used for the purposes the source documents served. Microform records must be labeled and organized to support easy retrieval and use. Agencies must:

(a) Arrange, describe, and index the filmed records to permit retrieval of any particular document or component of the records.

(b) Title each microform roll or fiche with a titling target or header. For fiche, place the titling information in the first frame if the information will not fit on the header. At a minimum, titling information must include:

(1) The title of the records;

(2) The number or identifier for each unit of microform;

(3) The security classification, if any; and

(4) The name of the agency and suborganization, the inclusive dates, names, or other data identifying the records to be included on a unit of microform.

(c) Add an identification target showing the date of microfilming. When necessary to give the microform copy legal standing, the target must also identify the person who authorized the microfilming. Use ANSI/AIIM MS19 (incorporated by reference, see § 1238.5) for standards for identification targets.

### § 1238.14 What are the microfilming requirements for permanent and unscheduled records?

(a) Agencies must apply the standards in this section when microfilming:

(1) Permanent paper records where the original paper record will be destroyed (only after authorization from NARA);

(2) Unscheduled paper records where the original paper record will be destroyed (only after authorization from NARA); and

(3) Permanent and unscheduled original microform records (no paper originals) produced by automation, such as COM.

(b) Agencies must use polyester-based silver gelatin type film that conforms to ISO 18901 (incorporated by reference, see § 1238.5) for LE 500 film in all applications.

(c) Agencies must process microforms so that the residual thiosulfate ion concentration will not exceed 0.014 grams per square meter in accordance with ISO 18901 (incorporated by reference, see § 1238.5) and use the processing procedures in ANSI/AIIM MS1 and ANSI/AIIM MS23 (both incorporated by reference, see § 1238.5).

(d) Agencies must use the following standards for quality:

(1) *Resolution*—(i) *Source documents*. Agencies must determine minimum resolution on microforms of source documents using the method in the Quality Index Method for determining resolution and anticipated losses when duplicating, as described in ANSI/AIIM MS23 and ANSI/AIIM MS43 (both incorporated by reference, see § 1238.5). Agencies must perform resolution tests using an ANSI/ISO 3334 Resolution Test Chart (incorporated by reference, see

§ 1238.5) or a commercially available certifiable target manufactured to comply with this standard, and read the patterns following the instructions of ANSI/ISO 3334. Agencies must use the smallest character used to display information to determine the height used in the Quality Index formula. Agencies must use a Quality Index of five at the third generation level.

(ii) *COM*. COM must meet the requirements of ANSI/AIIM MS1 (incorporated by reference, see § 1238.5).

(2) *Background density of images*. Agencies must use the background ISO standard visual diffuse transmission density on microforms appropriate to the type of documents being filmed. Agencies must use the procedure for density measurement described in ANSI/AIIM MS23 (incorporated by reference, see § 1238.5). The densitometer must meet with ANSI/NAPM IT2.18 (incorporated by reference, see § 1238.5) for spectral conditions and ANSI/NAPM IT2.19 (incorporated by reference, see § 1238.5) for geometric conditions for transmission density.

(i) Recommended visual diffuse transmission background densities for images of documents are as follows:

| Classification | Description of document | Background density |
|---|---|---|
| Group 1 | High-quality, high contrast printed book, periodicals, and black typing | 1.3–1.5 |
| Group 2 | Fine-line originals, black opaque pencil writing, and documents with small high contrast printing. | 1.15–1.4 |
| Group 3 | Pencil and ink drawings, faded printing, and very small printing, such as footnotes at the bottom of a printed page. | 1.0–1.2 |
| Group 4 | Low-contrast manuscripts and drawing, graph paper with pale, fine-colored lines; letters typed with a worn ribbon; and poorly printed, faint documents. | 0.8–1.0 |
| Group 5 | Poor-contrast documents (special exception). | 0.7–0.85 |

(ii) Recommended visual diffuse transmission densities for computer generated images are as follows:

| Film type | Process | Density measurement method | Min. Dmax [1] | Max. Dmin [1] | Minimum density difference |
|---|---|---|---|---|---|
| Silver gelatin | Conventional | Printing or diffuse | 0.75 | 0.15 | 0.60 |
| Silver gelatin | Full reversal | Printing | 1.50 | 0.20 | 1.30 |

[1] Character or line density, measured with a microdensitometer or by comparing the microfilm under a microscope with an image of a known density.

(3) *Base plus fog density of microfilms*. The base plus fog density of unexposed, processed microfilms must not exceed 0.10. When a tinted base film is used, the density will be increased. The difference must be added to the values given in the tables in paragraph (d)(2) of this section.

(4) *Line or stroke width*. Due to optical limitations in most micrographic systems, microfilm images of thin lines appearing in the source documents will tend to fill in as a function of their width and density. Therefore, as the reduction ratio of a given system is increased, reduce the background density as needed to ensure that the copies will be legible.

## § 1238.16 What are the microfilming requirements for temporary records, duplicates, and user copies?

(a) *Temporary records with a retention period over 99 years*. Agencies must use the microfilming requirements in § 1238.14.

(b) *Temporary records to be kept for less than 99 years, duplicates, and user copies*. NARA does not require the use of specific standards for these microforms. Agencies may select a film stock that meets their needs and ensures the preservation of the microforms for their full retention period. NARA recommends that agencies consult appropriate standards, available as noted in § 1238.3, and manufacturer's instructions for processing production, and

maintenance of microform to ensure that the images are accessible and usable for the entire retention period of the records.

## Subpart C—Storage, Use, and Disposition of Microform Records

### § 1238.20 How must microform records be stored?

(a) *Permanent and unscheduled records.* Agencies must store permanent and unscheduled microform records under the extended term storage conditions specified in ISO 18911 and ANSI/PIMA IT9.2 (both incorporated by reference, see § 1238.5), except that the relative humidity of the storage area must be a constant 35 percent RH, plus or minus 5 percent. Non-silver copies of microforms must be maintained in a different storage area than are silver gelatin originals or duplicate copies).

(b) *Temporary records.* Agencies must store temporary microform records under conditions that will ensure their preservation for their authorized retention period. NARA suggests that agencies may consult Life Expectance (LE) guidelines in ISO 18901 (incorporated by reference, see § 1238.5).

### § 1238.22 What are the inspection requirements for permanent and unscheduled microform records?

(a) Agencies must inspect, or arrange for a contractor or NARA to inspect master microform of permanent or unscheduled records following the inspection requirements in paragraph (b) of this section.

(b) The microforms listed in paragraph (a) of this section must be inspected initially in accordance with ANSI/AIIM MS45 (incorporated by reference, see § 1238.5). All microforms must be inspected when they are two years old. After the initial two-year inspection, unless there is a catastrophic event, the microforms must be inspected as follows until they are transferred to NARA:

(1) For microfilm produced after 1990, inspect the microfilm every 5 years.

(2) For microfilm produced prior to 1990, inspect the microfilm every 2 years.

(c) To facilitate inspection, the agency must maintain an inventory that lists each microform series or publication by production date, producer, processor, format, and results of previous inspections.

(d) The inspection must include the following elements:

(1) An inspection for aging blemishes following ANSI/AIIM MS45 (incorporated by reference, see § 1238.5);

(2) A rereading of resolution targets;

(3) A remeasurement of density; and

(4) A certification of the environmental conditions under which the microforms are stored, as specified in § 1238.20(a).

(e) The agency must prepare an inspection report, and send a copy to NARA in accordance with § 1238.28(c). The inspection report must contain:

(1) A summary of the inspection findings, including:

(i) A list of batches by year that includes the identification numbers of microfilm rolls and microfiche in each batch;

(ii) The quantity of microforms inspected;

(iii) An assessment of the overall condition of the microforms;

(iv) A summary of any defects discovered, e.g., redox blemishes or base deformation; and

(v) A summary of corrective actions taken.

(2) A detailed inspection log created during the inspection that contains the following information:

(i) A complete description of all records inspected (title; roll or fiche number or other unique identifier for each unit of film inspected; security classification, if any; and inclusive dates, names, or other data identifying the records on the unit of film);

(ii) The date of inspection;

(iii) The elements of inspection (see paragraph (d) of this section);

(iv) Any defects uncovered; and

(v) The corrective action taken.

(f) If an inspection finds that a master microform is deteriorating, the agency must make a silver duplicate in accordance with § 1238.14 to replace the deteriorating master. The duplicate microform must meet inspection requirements (see § 1238.22) before it may be transferred to a record center or NARA.

(g) Inspections must be conducted in environmentally controlled areas in accordance with ANSI/AIIM MS45 (incorporated by reference, see § 1238.5).

### § 1238.24 What are NARA inspection requirements for temporary microform records?

NARA recommends, but does not require, that agencies use the inspection procedures described in § 1238.22(a).

### § 1238.26 What are the restrictions on use for permanent and unscheduled microform records?

(a) Agencies must not use the silver gelatin master microform or duplicate silver gelatin microform of permanent or unscheduled records created in accordance with § 1238.14 of this part for reference purposes. Agencies must ensure that the master microform remains clean and undamaged during the process of making a duplicating master.

(b) Agencies must use duplicates for:

(1) Reference;

(2) Further duplication on a recurring basis;

(3) Large-scale duplication; and

(4) Distribution of records on microform.

(c) Agencies retaining the original record in accordance with an approved records disposition schedule may apply agency standards for the use of microform records.

### § 1238.28 What must agencies do when sending permanent microform records to a records storage facility?

Agencies must:

(a) Follow the procedures in part 1232 of this chapter and the additional requirements in this section.

(b) Package non-silver copies separately from the silver gelatin original or silver duplicate microform copy and clearly label them as non-silver copies.

(c) Include the following information on the transmittal (SF 135 for NARA Federal Records Centers), or in an attachment to the transmittal. For records sent to an agency records center or commercial records storage facility, submit this information to NARA as part of the documentation required by § 1232.14 of this subchapter:

(1) Name of the agency and program component;

(2) The title of the records and the media and format used;

(3) The number or identifier for each unit of microform;

(4) The security classification, if any;

(5) The inclusive dates, names, or other data identifying the records to be included on a unit of microform;

(6) Finding aids that are not contained in the microform; and

(7) The inspection log forms and inspection reports required by § 1238.22(e).

(d) Agencies may transfer permanent microform records to a records storage facility meeting the storage requirements in § 1232.14(a) (see § 1233.10 of this subchapter for NARA Federal Records Centers) of this subchapter only after the first inspection or with certification that the microforms will be inspected by the agency, a contractor, or a NARA Federal Records Center (on a reimbursable basis) when the microforms become 2 years old.

### § 1238.30 What must agencies do when transferring permanent microform records to the National Archives of the United States?

Agencies must:

(a) Follow the procedures in part 1235 of this subchapter and the additional requirements in this section.

(b) If the records are not in a NARA Federal Records Center, submit the information specified in § 1232.14(c) of this subchapter.

(c) Transfer the silver gelatin original (or duplicate silver gelatin microform created in accordance with § 1238.14) plus one microform copy.

(d) Ensure that the inspections of the microforms are up-to-date. NARA will not accession permanent microform records until the first inspection has been performed (when the microforms are 2 years old).

(e) Package non-silver copies separately from the silver gelatin original or silver duplicate microform copy and clearly label them as non-silver copies.

### § 1238.32 Do agencies need to request NARA approval for the disposition of all microform and source records?

(a) *Permanent or unscheduled records.* Agencies must schedule both source

documents (originals) and microforms. NARA must approve the schedule, SF 115, Request for Records Disposition Authority, in accordance with part 1225 of this subchapter before any records, including source documents, may be destroyed.

(1) Agencies that comply with the standards in § 1238.14 must include on the SF 115 the following certification: ''This certifies that the records described on this form were (or will be) microfilmed in accordance with the standards set forth in 36 CFR part 1238.''

(2) Agencies using microfilming methods, materials, and procedures that do not meet the standards in § 1238.14(a) must include on the SF 115 a description of the system and standards used.

(3) When an agency intends to retain the silver original microforms of permanent records and destroy the original records, the agency must certify in writing on the SF 115 that the microform will be stored in compliance with the standards of § 1238.20 and inspected as required by § 1238.22.

(b) *Temporary records.* Agencies do not need to obtain additional NARA approval when destroying scheduled temporary records that have been microfilmed. The same approved retention period for temporary records is applied to microform copies of these records. The original records can be destroyed once microfilm is verified, unless legal or other requirements prevent their early destruction.

# PART 1239—PROGRAM ASSISTANCE AND INSPECTIONS

## Subpart A—General

Sec.
1239.1 What is the scope of this part?
1239.2 What are the authorities for part 1239?
1239.3 What definitions apply to this part?
1239.4 What standards are used as guidance for this part?

## Subpart B—Program Assistance

1239.10 What program assistance does NARA provide?
1239.12 Whom may agencies contact to request assistance?

## Subpart C—Inspections

1239.20 When will NARA undertake an inspection?
1239.22 How does NARA notify the agency of the inspection?
1239.24 How does NARA conduct an inspection?
1239.26 What are an agency's follow up obligations for an inspection report?

AUTHORITY: 44 U.S.C. 2904 and 2906.

SOURCE: 74 FR 51014, Oct. 2, 2009, unless otherwise noted.

## Subpart A—General

### § 1239.1 What is the scope of this part?

NARA's statutory authorities include assisting agencies in carrying out their records management responsibilities and, when necessary, inspecting agency programs and reporting to Congress on those inspections. Part 1239 identifies the types of records management guidance and program assistance NARA provides to agencies under its 44 U.S.C. chapter 29 mandate; the conditions under which NARA will invoke its inspection authority, also under chapter 29; and the requirements for agencies to cooperate fully in such inspections.

### § 1239.2 What are the authorities for part 1239?

The authorities for this part are 44 U.S.C. 2904 and 2906.

### § 1239.3 What definitions apply to this part?

(a) See § 1220.18 of this subchapter for definitions of terms used in part 1239.

(b) As used in part 1239—

*Inspection* means a formal review and report by NARA under 44 U.S.C. 2904(c) and 2906(a) of an agency's recordkeeping processes that focus on significant records management problems affecting records at risk that meet one or more of the following criteria:

(1) Have a direct and high impact on legal rights or government accountability;

(2) Are the subject of high profile litigation, Congressional attention, or widespread media coverage;

(3) Have high research potential; or

(4) Are permanent records with a large volume, regardless of format.

### § 1239.4 What standards are used as guidance for this part?

These regulations conform with guidance provided in ISO 15489–1:2001. Paragraphs 7.1, Principles of records management programmes, and 10, Monitoring and auditing, apply to this part.

## Subpart B—Program Assistance

### § 1239.10 What program assistance does NARA provide?

(a) NARA publishes handbooks, conducts workshops and other training sessions, and furnishes information and guidance to Federal agencies about the creation of records, their maintenance and use, and their disposition. NARA also may conduct a targeted assistance project in cooperation with an agency to address a serious records management issue in the agency.

(b) Information on NARA handbooks and guidance is available at *http://www.archives.gov/records-mgmt/*.

(c) Information on NARA training is available at *http://www.archives.gov/records-mgmt/training/*.

### § 1239.12 Whom may agencies contact to request program assistance?

Agencies in the Washington, DC, area desiring information or assistance related to any of the areas covered by subchapter B may contact the National Archives and Records Administration, Life Cycle Management Division (NWML), 8601 Adelphi Rd., College Park, MD 20740–6001, phone number 301–837–1738. Agency field organizations may contact the appropriate NARA Regional Administrator regarding records management assistance, including for records in or scheduled for transfer to the records center or the archival operations within the region.

## Subpart C—Inspections

### § 1239.20 When will NARA undertake an inspection?

NARA may undertake an inspection when an agency fails to address specific records management problems involving high risk to significant records. Problems may be identified through a risk assessment or through other means, such as reports in the media, Congressional inquiries, allegations of unauthorized destruction, reports issued by the GAO or an agency's Inspector General, or observations by NARA staff members. Inspections will be undertaken when other NARA program assistance efforts (see § 1239.10) have failed to mitigate situations where there is a high risk of loss of significant records, or when NARA agrees to a request from the agency head that NARA conduct an inspection to address specific significant records management issues in the agency. NARA reports to Congress and the Office of Management and Budget on inspections in accordance with 44 U.S.C. 2904.

### § 1239.22 How does NARA notify the agency of the inspection?

(a) Once NARA identifies the need to conduct an agency inspection, the Archivist of the United States sends a letter to the head of the agency. If the agency being inspected is a component of a cabinet department, the letter will be addressed to the head of the component, with a copy sent to the head of the department. NARA will also send copies to the agency's records officer. The letter will include:

(1) Notification that NARA intends to conduct an inspection, the records that will be inspected, and the issues to be addressed;

(2) A beginning date for the inspection that is no more than 30 days after the date of the letter; and

(3) A request that the agency appoint a point of contact who will assist NARA in conducting the inspection.

(b) If the agency does not respond to NARA's notification letter, NARA will use its statutory authority under 44 U.S.C. 2904(c)(8) to report the matter to the agency's congressional oversight committee and to the Office of Management and Budget.

### § 1239.24 How does NARA conduct an inspection?

(a) The NARA inspection team leader will coordinate with the agency point of contact to arrange an initial meeting with the agency. The initial meeting will address such matters as the parameters of the inspection, any surveys or other inspection instruments, the

offices to be visited, and the timing of site visits.

(b) After the inspection is complete, NARA will prepare a draft inspection report and transmit it to the agency within 45 calendar days of the last site visit. The report will include:

(1) An executive summary;

(2) Background and purpose of inspection;

(3) Inspection methodology, including offices visited;

(4) Findings;

(5) Corrective actions needed and other recommendations; and

(6) Any necessary appendixes, such as summaries of each site visit or the inspection instrument.

(c) The draft report is sent to the agency for review, with a response deadline of 45 days.

(d) NARA will incorporate any necessary corrections or revisions in the final report and issue the report to the head of the agency within 45 days.

### § 1239.26 What are an agency's follow up obligations for an inspection report?

The agency must submit a plan of corrective action that specifies how the agency will address each inspection report recommendation, including a timeline for completion, and proposed progress reporting dates. The agency must submit the plan of corrective action to NARA within 60 days of transmission of the final report. NARA may take up to 60 days to review and comment on the plan. Once the plan is agreed upon by both sides, agencies must submit progress reports to NARA until all actions are completed.

## PARTS 1240–1249 [RESERVED]

# SUBCHAPTER C—PUBLIC AVAILABILITY AND USE

## PART 1250—PUBLIC AVAILABILITY AND USE OF FEDERAL RECORDS

### Subpart A—General Information About Freedom of Information Act (FOIA) Requests


Sec.
1250.1 Scope of this part.
1250.2 Definitions.
1250.4 Who can file a FOIA request?
1250.6 Does FOIA cover all of the records at NARA?
1250.8 Does NARA provide access to all the executive branch records housed at NARA facilities?
1250.10 Do I need to use FOIA to gain access to records at NARA?
1250.12 What types of records are available in NARA's FOIA Reading Room?
1250.14 If I do not use FOIA to request records, will NARA treat my request differently?


### Subpart B—How to Access Records Under FOIA


1250.20 What do I include in my FOIA request?
1250.22 Where do I send my FOIA request?
1250.24 Will you accept a FOIA request through email?
1250.26 How quickly will NARA respond to my FOIA request?
1250.28 Will NARA ever expedite the review of the records I requested?
1250.30 How do I request expedited processing?
1250.32 How quickly will NARA process an expedited request?
1250.34 How will I know if NARA is going to release the records I requested?
1250.36 When will NARA deny a FOIA request?
1250.38 In what format will NARA provide copies?


### Subpart C—Fees


1250.50 Will I be charged for my FOIA request?
1250.52 How much will I have to pay for a FOIA request for NARA operational records?
1250.54 General information on fees for NARA operational records.
1250.56 Fee schedule for NARA operational records.
1250.58 Does NARA ever waive FOIA fees for NARA operational records?
1250.60 How will NARA determine if I am eligible for a fee waiver for NARA operational records?


### Subpart D—Appeals


1250.70 What are my appeal rights under FOIA?
1250.72 How do I file an appeal?
1250.74 Where do I send my appeal?
1250.76 May I email my FOIA appeal?
1250.78 How does NARA handle appeals?


### Subpart E—Special Situations


1250.80 How does a submitter identify records containing confidential commercial information?
1250.82 How will NARA handle a FOIA request for confidential commercial information?


AUTHORITY: 44 U.S.C. 2104(a), 2204; 5 U.S.C. 552; E.O. 12600, 52 FR 23781, 3 CFR, 1987 Comp., p. 235.

SOURCE: 66 FR 16376, Mar. 23, 2001, unless otherwise noted.

## Subpart A—General Information About Freedom of Information Act (FOIA) Requests

### § 1250.1 Scope of this part.

This part implements the provisions of the Freedom of Information Act (FOIA), 5 U.S.C. 552, as amended, for NARA operational records and archival records that are subject to FOIA. Other NARA regulations in 36 CFR parts 1254 through 1275 provide detailed guidance for conducting research at NARA.

### § 1250.2 Definitions.

The following definitions apply to this part:

(a) *Archival records* means permanently valuable records of the United States Government that have been transferred to the legal custody of the Archivist of the United States.

(b) *Commercial use requester* means a requester seeking information for a use or purpose that furthers the commercial, trade, or profit interests of the requester or the person on whose behalf the request is made.

(c) *Confidential commercial information* means records provided by a submitter that may contain material exempt from release under the FOIA because

disclosure could reasonably be expected to cause the submitter substantial competitive harm.

(d) *Educational institution request* means a preschool, a public or private elementary or secondary school, an institution of undergraduate higher education, an institution of graduate higher education, an institution of professional education, or an institution of vocational education, that operates a program of scholarly research. To be in this category, a requester must show that the request is authorized by and is made under the auspices of a qualifying institution and that the records are not sought for a commercial use but are sought to further scholarly research.

(e) *FOIA request* means a written request for access to records of the executive branch of the Federal Government held by NARA, including NARA operational records, or to Presidential records in the custody of NARA that were created after January 19, 1981, that cites the Freedom of Information Act.

(f) *Freelance journalist* means an individual who qualifies as a representative of the news media because the individual can demonstrate a solid basis for expecting publication through a news organization, even though not actually in its employ. A publication contract would be the clearest proof of a solid basis, but the individual's publication history may also be considered in demonstrating this solid basis.

(g) *News media representative* means a person actively gathering news for an entity that is organized and operated to publish or broadcast news to the public. The term ''news'' means information that is about current events or that would be of current interest to the public. Examples of news media entities include television or radio stations broadcasting to the public at large, and publishers of periodicals (but only in those instances when they can qualify as disseminators of news) who make their products available for purchase or subscription to the general public.

(h) *Non-commercial scientific institution* means an institution that is not operated on a basis that furthers the commercial, trade, or profit interests of any person or organization, and which is operated solely for the purpose of conducting scientific research which produces results that are not intended to promote any particular product or industry.

(i) *Operational records* means those records that NARA creates or receives in carrying out its mission and responsibilities as an executive branch agency. This does not include archival records as defined in paragraph (a) of this section.

(j) *Other requesters* means any individual who is not a commercial-use requester, not a representative of the news media, not a freelance journalist, nor one associated with an educational or non-commercial scientific institution whose research activities conform to the definition in paragraph (h) of this section.

(k) *Submitter* means any person or entity providing potentially confidential commercial information to an agency. The term submitter includes, but is not limited to, corporations, state governments, and foreign governments.

### § 1250.4 Who can file a FOIA request?

Any individual, partnership, corporation, association, or government regardless of nationality may file a FOIA request.

### § 1250.6 Does FOIA cover all of the records at NARA?

No, FOIA applies only to the records of the executive branch of the Federal government and certain Presidential records. Use the following chart to determine how to gain access:

| IF YOU WANT ACCESS TO ... | THEN ACCESS IS GOVERNED BY . . . |
|---|---|
| (A) Records of executive branch agencies | This part and parts 1254 through 1260 of this chapter. FOIA applies to these records. |
| (B) Records of the Federal courts | Parts 1254 through 1260 of this chapter. FOIA does not apply to these records. |

| IF YOU WANT ACCESS TO ... | THEN ACCESS IS GOVERNED BY . . . |
|---|---|
| (C) Records of Congress | Parts 1254 through 1260 of this chapter. FOIA does not apply to these records. |
| (D) Presidential records (created by Presidents holding office since 1981). | This part and parts 1254 through 1270 of this chapter. FOIA applies to these records 5 years after the President leaves office. However a President may invoke exemptions under the Presidential Records Act which would extend this up to 12 years after the President leaves office. |
| (E) Documents created by Presidents holding office before 1981 and housed in a NARA Presidential library. | The deed of gift under which they were given to NARA. These documents are not Federal records and FOIA does not apply to these materials. |
| (F) Nixon Presidential materials | Part 1275 of this chapter. FOIA does not apply to these materials. |

### § 1250.8 Does NARA provide access to all the executive branch records housed at NARA facilities?

(a) NARA provides access to the records NARA creates (operational records) and records originating in other Federal agencies that have been transferred to the legal custody of the Archivist of the United States (archival records).

(b) Twentieth-century personnel and medical records of former members of the military and of former civilian employees of the Federal government are held at NARA's National Personnel Records Center (NPRC), located in St. Louis, Missouri. These records remain in the legal custody of the agencies that created them and access to them is governed by the FOIA and other access regulations of the creating agencies. The NPRC processes FOIA requests under authority delegated by the originating agencies, not under the provisions of this part.

(c) In our national and regional records centers, NARA stores records that agencies no longer need for day-to-day business. These records remain in the legal custody of the agencies that created them. Access to these records is through the originating agency. NARA does not process FOIA requests for these records.

### § 1250.10 Do I need to use FOIA to gain access to records at NARA?

(a) Most archival records held by NARA are available to the public for research without filing a FOIA request. You may either visit a NARA facility as a researcher to view and copy records or you may write to request copies of specific records.

(b) If you are seeking access to archival records that are restricted and not available to the public, you may need to file a FOIA request or a mandatory review request (see part 1254 of this chapter for procedures for accessing classified records) to gain access to these materials. If you make a reference request for restricted records, we may ask that you change your reference request to a FOIA request or a mandatory review request. See 36 CFR 1254.46 for information on filing mandatory review requests.

(c) You must file a FOIA request when you request access to NARA operational records that are not already available to the public.

### § 1250.12 What types of records are available in NARA's FOIA Reading Room?

(a) NARA makes available for public inspection and copying the following materials described in subsection (a)(2) of the FOIA:

(1) Final NARA orders;

(2) Written statements of NARA policy that are not published in the FEDERAL REGISTER;

(3) Operational staff manuals and instructions to staff that affect members of the public;

(4) Copies of records requested 3 or more times under FOIA and other records that have been or are likely to become the subject of subsequent FOIA requests for substantially the same records;

(5) An index, updated quarterly, to these materials.

(b) These materials are available during normal working hours at the NARA facility where the records are located. See 36 CFR parts 1253 and 1254 for a fuller description of NARA facilities and research room procedures.

(c) Any of this material that was created after October 31, 1996, will also be placed on NARA's web site at *http://www.archives.gov/research_room/foia_reading_room/foia_reading_room.html*.

(d) For paper copies of the index to these materials write the NARA FOIA Officer at the address listed in § 1250.22(d).

[66 FR 16376, Mar. 23, 2001, as amended at 67 FR 43253, June 27, 2002]

### § 1250.14 If I do not use FOIA to request records, will NARA treat my request differently?

Whether you choose to invoke the FOIA or not, NARA will respond as promptly as possible to your request.

## Subpart B—How To Access Records Under FOIA

### § 1250.20 What do I include in my FOIA request?

In your FOIA request, you must:

(a) Describe the records you wish to access in enough detail to allow NARA staff to find them. The more information you provide, the better possibility NARA has of finding the records you are seeking. Information that will help us find the records includes:

(1) The agencies, offices, or individuals involved; and

(2) The approximate date when the records were created.

(b) Include your name and full mailing address. If possible, please include a phone number or email address as well. This information will allow us to reach you faster if we have any questions about your request.

(c) Mark both your letter and envelope with the words ''FOIA Request.''

### § 1250.22 Where do I send my FOIA request?

(a) For requests for archival records in the Washington, DC, area, mail your request to the Chief, Special Access and FOIA Staff (NWCTF), Room 6350, National Archives and Records Administration, 8601 Adelphi Road, College Park, MD 20740-6001.

(b) For archival records in any of NARA's regional records services facilities, send the FOIA request to the director of the facility in which the records are located. The addresses for these facilities are listed in 36 CFR 1253.7.

(c) For Presidential records subject to FOIA, mail your request to the director of the library in which the records are located. The addresses for these facilities are listed in 36 CFR 1253.3.

(d) For the operational records of any NARA unit except the Office of the Inspector General, mail your request to the NARA FOIA Officer (NGC), Room 3110, National Archives and Records Administration, 8601 Adelphi Road, College Park, MD 20740-6001.

(e) For records of the Inspector General write to Office of the Inspector General (OIG), FOIA Request, Room 1300, National Archives and Records Administration, 8601 Adelphi Road, College Park, MD 20740-6001.

(f) If you are unable to determine where to send your request, send it to the NARA FOIA Officer (NGC), Room 3110, National Archives and Records Administration, 8601 Adelphi Road, College Park, MD 20740-6001. That office will forward your request to the office(s) that have the records you are seeking. Your request will be considered received when it reaches the proper office's FOIA staff.

### § 1250.24 Will you accept a FOIA request through email?

Yes, send email FOIA requests to *http://www.archives.gov/global_pages/inquire_form.html*. You must indicate in the subject line of your email message that you are sending a FOIA request. The body of the message must contain all of the information listed in § 1250.20.

[66 FR 16376, Mar. 23, 2001, as amended at 67 FR 43253, June 27, 2002]

### § 1250.26 How quickly will NARA respond to my FOIA request?

(a) NARA will make an initial response to all FOIA requests within 20 working days. The initial response will inform requesters of any complexity in processing their request, which may lengthen the time required to reach a final decision on the release of the records.

(b) In most cases, NARA will make a decision on the release of the records you requested within the 20 working days. If unusual circumstances prevent us from making a decision within 20 working days, we will inform you in writing how long it will take us to complete your request. Unusual circumstances are the need to:

(1) Search for and collect the records from field facilities;

(2) Search for, collect, and review a voluminous amount of records which are part of a single request; or

(3) Consult with another agency before releasing records.

(c) If we are extending the deadline for more than an additional 10 working days, we will ask you if you wish to modify your request so that we can meet the deadline. If you do not agree to modify your request, we will work with you to arrange an alternative time schedule for review and release.

(d) If you have requested records that we do not have the authority to release without consulting another agency (e.g. security-classified records), we will refer copies of the documents to the appropriate agency. NARA will send you an initial response to your FOIA requests within 20 working days informing you of this referral. However, the final response to your FOIA can only be made when the agency to which we have referred the documents responds to us.

(e) If you have requested Presidential records and NARA decides to grant you access, NARA must inform the incumbent and former Presidents of our intention to disclose information from those records. After receiving the notice, the incumbent and former Presidents have 30 days in which to decide whether or not to invoke Executive privilege to deny access to the information. NARA will send you an initial response to your FOIA request within 20 working days informing you of the status of your request. However, the final response to your FOIA can only be made at the end of the 30-day Presidential notification period.

(f) If you have requested records containing confidential commercial information that is less than 10 years old, we will contact the submitter of the requested information. NARA will send you an initial response to your FOIA request within 20 working days informing you of our actions. See § 1250.82 for the time allowed the submitter to object to the release of confidential commercial information. If the records contain confidential commercial information that is 10 years old or older, NARA staff will not contact the submitter, but will process the request under normal FOIA procedures.

### § 1250.28 Will NARA ever expedite the review of the records I requested?

(a) In certain cases NARA will move your FOIA request or appeal to the head of our FOIA queue. We will do this for any of the following reasons:

(1) A reasonable expectation of an imminent threat to an individual's life or physical safety;

(2) A reasonable expectation of an imminent loss of a substantial due process right; or

(3) An urgent need to inform the public about an actual or alleged Federal government activity (this last criterion applies only to those requests made by a person primarily engaged in disseminating information to the public).

(b) NARA can expedite requests, or segments of requests, only for records over which we have control. If NARA must refer a request to another agency, we will so inform you and suggest that you seek expedited review from that agency. We cannot expedite requests for Presidential records or shorten the 30-day Presidential notification period.

### § 1250.30 How do I request expedited processing?

You must submit a statement, certified to be true and correct to the best of your knowledge, explaining the basis of your need for expedited processing. All such requests must be sent to the

appropriate official at the address listed in § 1250.22. You may request expedited processing when you first request records or at any time during our processing of your request.

### § 1250.32 How quickly will NARA process an expedited request?

We will respond to you within 10 days of our receipt of your request for expedited processing. If we grant your request, the NARA office responsible for the review of the requested records will process your request as quickly as possible. If we deny your request for expedited processing and you decide to appeal our denial, we will also expedite our review of your appeal.

### § 1250.34 How will I know if NARA is going to release the records I requested?

Once NARA decides to release the requested records, in whole or in part, we will inform you in writing. Our response will tell you how much responsive material we found, where you may review the records, and the copying or other charges due. If the records you sought were released only in part, we will estimate, if possible, the amount of the withheld information. Also, if we deny any part of your request, our response will explain the reasons for the denial, which FOIA exemptions apply, and your right to appeal our decisions.

### § 1250.36 When will NARA deny a FOIA request?

The FOIA contains nine exemptions under which information may be exempted from release. Given the age and nature of archival records, many of these exemptions apply to only a few of the records in our custody. We will only withhold information where we must (such as information which remains classified, or information which is specifically closed by statute) or we reasonably foresee that disclosure would cause a harm. In addition if only part of a record must be withheld, NARA will provide access to the rest of the information in the record. Categories of information that may be exempt from disclosure under the FOIA are as follows:

| SECTION OF THE FOIA: | REASON FOR EXEMPTION: |
|---|---|
| 5 U.S.C. 552(b)(1) | Specifically authorized under criteria established by an Executive order to be kept secret in the interest of national defense or foreign policy and are in fact properly classified under the Executive order. |
| 5 U.S.C. 552(b)(2) | Related solely to the internal personnel rules and practices of an agency. |
| 5 U.S.C. 552(b)(3) | Specifically exempted from disclosure by statute (other than section 552b of this title), provided that the statute:<br>(A) Requires that the matters be withheld from the public in such a manner as to leave no discretion on the issue; or<br>(B) Establishes particular criteria for withholding or refers to particular types of matters to be withheld. |
| 5 U.S.C. 552(b)(4) | Trade secrets and commercial or financial information obtained from a person that are privileged or confidential. |
| 5 U.S.C. 552(b)(5) | Inter-agency or intra-agency memorandums or letters which would not be available by law to a party other than an agency in litigation with the agency. |
| 5 U.S.C. 552(b)(6) | Personnel and medical files and similar files the disclosure of which would constitute a clearly unwarranted invasion of personal privacy. |

| SECTION OF THE FOIA: | REASON FOR EXEMPTION: |
|---|---|
| 5 U.S.C. 552(b)(7) | Records or information compiled for law enforcement purposes, but only to the extent that the production of such law enforcement records or information:<br>(A) Could reasonably be expected to interfere with enforcement proceedings:<br>(B) Would deprive a person of a right to a fair trial or an impartial adjudication;<br>(C) Could reasonably be expected to constitute an unwarranted invasion of personal privacy;<br>(D) Could reasonably be expected to disclose the identity of a confidential source, including a State, local, or foreign agency or authority or any private institution which furnished information on a confidential basis, and, in the case of a record or information compiled by a criminal law enforcement authority in the course of a criminal investigation, or by an agency conducting lawful national security intelligence investigation, information furnished by a confidential source;<br>(E) Would disclose techniques and procedures for law enforcement investigations or prosecutions, or would disclose guidelines for law enforcement investigations or prosecutions if such disclosure could reasonably be expected to risk circumvention of the law; or<br>(F) Could reasonably be expected to endanger the life or physical safety of any individual. |
| 5 U.S.C. 552(b)(8) | Contained in or related to examination, operating, or condition reports prepared by, on behalf of, or for the use of an agency responsible for the regulation or supervision of financial institutions. |
| 5 U.S.C. 552(b)(9) | Geological and geophysical information and data, including maps, concerning wells. |

### § 1250.38 In what format will NARA provide copies?

After all applicable fees are paid, NARA will provide you copies of records in the format you request if the records already exist in that format, or if they are readily reproducible in the format you request.

## Subpart C—Fees

### § 1250.50 Will I be charged for my FOIA request?

(a) Fees and fee waivers for FOIA requests for NARA operational records are listed in this subpart.

(b) Fees for FOIA requests for NARA archival records are listed in 36 CFR part 1258.

### § 1250.52 How much will I have to pay for a FOIA request for NARA operational records?

(a) If you are a commercial use requester, we will charge you fees for searching, reviewing, and copying.

(b) If you are an educational or scientific institution requester, or a member of the news media, we will charge you fees for copying. However, we will not charge you for copying the first 100 pages.

(c) If you do not fall into either of the categories in paragraphs (a) and (b) of this section, then we will charge you search and copying fees. However, we will not charge you for the first 2 hours of search time or for copying the first 100 pages.

### § 1250.54 General information on fees for NARA operational records.

(a) NARA is able to make most of its records available for examination at the NARA facility where the records

are located. Whenever this is possible, you may review the records in a NARA research room at that facility.

(b) If you want NARA to supply you with copies, we will normally require you to pay all applicable fees in accordance with § 1250.52 before we provide you with the copies.

(c) NARA may charge search fees even if the records are not releasable or even if we do not find any responsive records during our search.

(d) If you are entitled to receive 100 free pages, but the records cannot be copied onto standard size (8.5″ by 11″) photocopy paper, we will copy them on larger paper and will reduce your copy fee by the normal charge for 100 standard size photocopies. If the records are not on textual media (e.g., photographs or electronic files) we will provide the equivalent of 100 pages of standard size paper copies for free.

(e) We will not charge you any fee if the total costs are $10 or less.

(f) If estimated search or review fees exceed $50, we will contact you. If you have specified a different limit that you are willing to spend, we will contact you only if we estimate the fees will exceed that amount.

(g) If you have failed to pay FOIA fees in the past, we will require you to pay your past-due bill before we begin processing your request. If we estimate that your fees may be greater than $250, we may require payment or a deposit before we begin processing your request.

(h) If we determine that you (acting either alone or with others) are breaking down a single request into a series of requests in order to avoid or reduce fees, we may aggregate all these requests in calculating the fees.

### § 1250.56 Fee schedule for NARA operational records.

In responding to FOIA requests for operational records, NARA will charge the following fees, where applicable, unless we have given you a reduction or waiver of fees under § 1250.60.

(a) *Search fees*—(1) *Manual searching of records*. When the search is relatively straightforward and can be performed by a clerical or administrative employee, the search rate is $16 per hour (or fraction thereof). When the request is more complicated and must be done by a professional employee of NARA, the rate is $33 per hour (or fraction thereof)

(2) *Computer searching*. This is the actual cost to NARA of operating the computer and the salary of the operator. When the search is relatively straightforward and can be performed by a clerical or administrative employee, the search rate is $16 per hour (or fraction thereof). When the request is more complicated and must be done by a professional employee of NARA, the rate is $33 per hour (or fraction thereof).

(b) *Review fees*. (1) Review fees are charged for time spent examining all documents that are responsive to a request to determine if any are exempt from release and to determine if NARA will release exempted records.

(2) The review fee is $33 per hour (or fraction thereof).

(3) NARA will not charge review fees for time spent resolving general legal or policy issues regarding the application of exemptions.

(c) *Reproduction fees*—(1) *Self-service photocopying*. At NARA facilities with self-service photocopiers, you may make reproductions of released paper documents for 15 cents per page.

(2) *Photocopying standard size pages*. This charge is 20 cents per page when NARA produces the photocopies.

(3) *Reproductions of electronic records*. The direct costs to NARA for staff time for programming, computer operations, and printouts or electromagnetic media to reproduce the requested information will be charged to requesters. When the work is relatively straightforward and can be performed by a clerical or administrative employee, the rate is $16 per hour (or fraction thereof). When the request is more complicated and must be done by a professional employee of NARA, the rate is $33 per hour (or fraction thereof).

(4) *Copying other media*. This is the direct cost to NARA of the reproduction. Specific charges will be provided upon request.

### § 1250.58 Does NARA ever waive FOIA fees for NARA operational records?

(a) NARA will waive or reduce your fees for NARA operational records only

if your request meets both of the following criteria:

(1) The request is in the public interest (i.e., information likely to contribute significantly to public understanding of the operations and activities of the government); and

(2) The request is not primarily in your commercial interest.

(b) All requests for fee waivers or reductions must be made at the time of the initial FOIA request. All requests must include the grounds for requesting the reduction or elimination of fees.

### § 1250.60 How will NARA determine if I am eligible for a fee waiver for NARA operational records?

(a) If you request a fee waiver, NARA will consider the following in reviewing how your request meets the public interest criteria in § 1250.58(a)(1):

(1) How do the records pertain to the operations and activities of the Federal Government?

(2) Will release reveal any meaningful information about Federal Government activities that is not already publicly known?

(3) Will disclosure to you advance the understanding of the general public on the issue?

(4) Do you have expertise in or a thorough understanding of these records?

(5) Will you be able to disseminate this information to a broad spectrum of the public?

(6) Will disclosure lead to a significantly greater understanding of the Government by the public?

(b) After reviewing your request and determining that there is a substantial public interest in release, NARA will also review it to determine if it furthers your commercial interests. If it does, you are not eligible for a fee waiver.

## Subpart D—Appeals

### § 1250.70 What are my appeal rights under FOIA?

You may appeal any of the following decisions:

(a) The refusal to release a record, either in whole or in part;

(b) The determination that a record does not exist or cannot be found;

(c) The determination that the record you sought was not subject to the FOIA;

(d) The denial of a request for expedited processing; or

(e) The denial of a fee waiver request.

### § 1250.72 How do I file an appeal?

(a) All appeals must be in writing and received by NARA within 35 calendar days of the date of NARA's denial letter. Mark both your letter and envelope with the words ''FOIA Appeal,'' and include a copy of your initial request and our denial.

(b) In your appeal, explain why we should release the records, grant your fee waiver request, or expedite the processing of your request. If we were not able to find the records you wanted, explain why you believe our search was inadequate. If we denied you access to records and told you that those records were not subject to FOIA, please explain why you believe the records are subject to FOIA.

### § 1250.74 Where do I send my appeal?

(a) If NARA's Inspector General denied your request, send your appeal to the Archivist of the United States, (ATTN: FOIA Appeal Staff), Room 4200, National Archives and Records Administration, 8601 Adelphi Road, College Park, Maryland 20740-6001.

(b) Send all other appeals to the Deputy Archivist of the United States, (ATTN: FOIA Appeal Staff), Room 4200, National Archives and Records Administration, 8601 Adelphi Road, College Park, Maryland 20740-6001.

(c) Denials under FOIA of access to national security information accessioned into the National Archives of the United States are made by designated officials of the originating or responsible agency or by NARA under a written delegation of authority. You must appeal determinations that records remain classified for reasons of national security to the agency with responsibility for protecting and declassifying that information. NARA will provide you with the necessary appeal information in those cases. You

can find additional information on access to national security classified records at NARA in 36 CFR part 1254.

### § 1250.76 May I email my FOIA appeal?

Yes, you may submit a FOIA appeal via email to *http://www.archives.gov/global_pages/inquire_form.html*. You must put the words ''FOIA Appeal'' in the subject line of your email message. The body of your message must contain the information in § 1250.72(b).

[66 FR 16376, Mar. 23, 2001, as amended at 67 FR 43253, June 27, 2002]

### § 1250.78 How does NARA handle appeals?

NARA will respond to your appeal within 20 working days after its receipt of the appeal by NARA. If we reverse or modify our initial decision, we will inform you in writing and reprocess your request. If we do not change our initial decision, our response to you will explain the reasons for our decision, any FOIA exemptions that apply, and your right to judicial review of our decision.

## Subpart E—Special Situations

### § 1250.80 How does a submitter identify records containing confidential commercial information?

When a person submits records that contain confidential commercial information to NARA, that person may state in writing that all or part of the records are exempt from disclosure under exemption (b)(4) of the FOIA.

### § 1250.82 How will NARA handle a FOIA request for confidential commercial information?

If NARA receives a FOIA request for records containing confidential commercial information or for records that we believe may contain confidential commercial information and if the information is less than 10 years old, we will follow these procedures:

(a) If, after reviewing the records in response to a FOIA request, we believe that the records may be opened, we will make reasonable efforts to inform the submitter of this. When the request is for information from a single or small number of submitters, NARA will send a notice via registered mail to the submitter's last known address. Our notice to the submitter will include a copy of the FOIA request and will tell the submitter the time limits and procedures for objecting to the release of the requested material.

(b) The submitter will have 5 working days from the receipt of our notice to object to the release and to explain the basis for the objection. The NARA FOIA Officer may extend this period for an additional 5 working days.

(c) NARA will review and consider all objections to release that are received within the time limit. If we decide to release the records, we will inform the submitter in writing. This notice will include copies of the records as we intend to release them and our reasons for deciding to release. We will also inform the submitter that we intend to release the records 10 working days after the date of the notice unless a U.S. District Court forbids disclosure.

(d) If the requester files a lawsuit under the FOIA for access to any withheld records, we will inform the submitter.

(e) We will notify the requester whenever we notify the submitter of the opportunity to object or to extend the time for objecting.

# PART 1251—TESTIMONY BY NARA EMPLOYEES RELATING TO AGENCY INFORMATION AND PRODUCTION OF RECORDS IN LEGAL PROCEEDINGS

Sec.

1251.1 What is the purpose of this part?
1251.2 To what demands does this part apply?
1251.3 What definitions apply to this part?
1251.4 May employees provide records or give testimony in response to a demand without authorization?
1251.6 How does the General Counsel determine whether to comply with a demand for records or testimony?
1251.8 Who is authorized to accept service of a subpoena demanding the production of records or testimony?
1251.10 What are the filing requirements for a demand for documents or testimony?
1251.12 How does NARA process your demand?
1251.14 Who makes the final determination on compliance with demands for records or testimony?
1251.16 Are there any restrictions that apply to testimony?

1251.18 Are there any restrictions that apply to the production of records?
1251.20 Are there any fees associated with providing records or testimony?
1251.22 Are there penalties for providing records or testimony in violation of this part?

AUTHORITY: 44 U.S.C. 2104; 44 U.S.C. 2108; 44 U.S.C. 2109; 44 U.S.C. 2111 note; 44 U.S.C. 2112; 44 U.S.C. 2116; 44 U.S.C. ch. 22; 44 U.S.C. 3103.

SOURCE: 73 FR 79393, Dec. 29, 2008, unless otherwise noted.

### § 1251.1 What is the purpose of this part?

(a) This part provides the policies and procedures to follow when submitting a demand to an employee of the National Archives and Records Administration (NARA) to produce records or provide testimony relating to agency information in connection with a legal proceeding. You must comply with these requirements when you request the release or disclosure of records or agency information.

(b) The National Archives and Records Administration intends these provisions to:

(1) Promote economy and efficiency in its programs and operations;

(2) Minimize NARA's role in controversial issues not related to its mission;

(3) Maintain NARA's impartiality among private litigants when NARA is not a named party; and

(4) Protect sensitive, confidential information and the deliberative processes of NARA.

(c) In providing for these requirements, NARA does not waive the sovereign immunity of the United States.

(d) This part provides guidance for the internal operations of NARA. It does not create any right or benefit, substantive or procedural, that a party may rely upon in any legal proceeding against the United States.

### § 1251.2 To what demands does this part apply?

This part applies to demands to NARA employees for factual, opinion, or expert testimony relating to agency information or for production of records in legal proceedings whether or not NARA is a named party. However, it does not apply to:

(a) Demands upon or requests for a NARA employee to testify as to facts or events that are unrelated to his or her official duties and that are unrelated to the functions of NARA;

(b) Demands upon or requests for a former NARA employee to testify as to matters in which the former employee was not directly or materially involved while at NARA;

(c) Requests for the release of, or access to, records under the Freedom of Information Act, 5 U.S.C. 552, as amended; the Privacy Act, 5 U.S.C. 552a; the Federal Records Act, 44 U.S.C. chs. 21, 29, 31, 33; the Presidential Records Act, 44 U.S.C. ch. 22; or the Presidential Recordings and Materials Preservation Act, 44 U.S.C. 2111 note;

(d) Demands for records or testimony in matters before the Equal Employment Opportunity Commission or the Merit Systems Protection Board; and

(e) Congressional demands and requests for testimony or records.

### § 1251.3 What definitions apply to this part?

The following definitions apply to this part:

*Court of competent jurisdiction* means, for purposes of this part, the judge or some other competent entity, as authorized by statute or regulation or other lawful means, and not simply by an attorney or court clerk, must sign a demand for records the disclosure of which is constrained by the Privacy Act, 5 U.S.C. 552a because section (b)(11) of the Act requires appropriate authorization of a court of competent jurisdiction. See *Doe* v. *Digenova*, 779 F.2d 74 (D.C. Cir. 1985); *Stiles* v. *Atlanta Gas Light Company*, 453 F. Supp. 798 (N.D. Ga. 1978).

*Demand* means a subpoena, or an order or other command of a court or other competent authority, for the production, disclosure, or release of records in a legal proceeding, or for the appearance and testimony of a NARA employee in a legal proceeding.

*General Counsel* means the General Counsel of NARA or a person to whom the General Counsel has delegated authority under this part. General Counsel also means the Inspector General of NARA (or a person to whom the Inspector General has delegated authority

under this part) when a demand is made for records of NARA's Office of the Inspector General, or for the testimony of an employee of NARA's Office of the Inspector General.

*Legal proceeding* means any matter before a court of law, administrative board or tribunal, commission, administrative law judge, hearing officer, legislative body, or other body that conducts a legal or administrative proceeding. Legal proceeding includes all phases of litigation.

*NARA* means the National Archives and Records Administration.

*NARA employee or employee* means:

(1) Any current or former officer or employee of NARA, except that this definition does not include former NARA employees who are retained or hired as expert witnesses concerning, or who agree to testify about, matters available to the public or matters with which they had no specific involvement or responsibility during their employment with NARA;

(2) Any other individual hired through contractual agreement by or on behalf of NARA or who has performed or is performing services under such an agreement for NARA;

(3) Any individual who served or is serving in any consulting or advisory capacity to NARA, whether formal or informal; and

(4) Any individual who served or is serving in any volunteer or internship capacity to NARA.

*Records or agency information* means:

(1) Archival records, which are permanently valuable records of the United States Government that have been transferred to the legal custody of the Archivist of the United States;

(2) Operational records, which are those records that NARA creates or receives in carrying out its mission and responsibilities as an executive branch agency. This does not include archival records as defined above in this section;

(3) All documents and materials which are NARA agency records under the Freedom of Information Act, 5 U.S.C. 552, as amended;

(4) Presidential records as defined in 44 U.S.C. 2201; historical materials as defined in 44 U.S.C. 2101; records as defined in 44 U.S.C. 2107 and 44 U.S.C. 3301;

(5) All other documents and materials contained in NARA files; and

(6) All other information or materials acquired by a NARA employee in the performance of his or her official duties or because of his or her official status.

*Testimony* means any written or oral statements, including depositions, answers to interrogatories, affidavits, declarations, interviews, and statements made by an individual in connection with a legal proceeding.

### § 1251.4 May employees provide records or give testimony in response to a demand without authorization?

No, except as otherwise permitted by § 1251.14 of this part, no employee may produce records and information or provide any testimony relating to agency information in response to a demand, or other legal request, without the prior, written approval of the General Counsel.

### § 1251.6 How does the General Counsel determine whether to comply with a demand for records or testimony?

The General Counsel may consider the following factors in determining whether or not to grant an employee permission to testify on matters relating to agency information, or permission to produce records in response to a demand:

(a) NARA's compliance with the demand is required by federal law, regulation or rule, or is otherwise permitted by this part;

(b) The purposes of this part are met;

(c) Allowing such testimony or production of records would be necessary to prevent a miscarriage of justice;

(d) NARA has an interest in the decision that may be rendered in the legal proceeding;

(e) Allowing such testimony or production of records would assist or hinder NARA in performing its statutory duties;

(f) Allowing such testimony or production of records would involve a substantial use of NARA resources;

(g) Responding to the demand would interfere with the ability of NARA employees to do their work;

(h) Allowing such testimony or production of records would be in the best interest of NARA or the United States;

(i) The records or testimony can be obtained from the publicly available records of NARA or from other sources;

(j) The demand is unduly burdensome or otherwise inappropriate under the applicable rules of discovery or the rules of procedure governing the case or matter in which the demand arose;

(k) Disclosure would violate a statute, Executive Order or regulation;

(l) Disclosure would reveal confidential, sensitive, or privileged information, trade secrets or similar, confidential commercial or financial information, otherwise protected information, or information which would otherwise be inappropriate for release;

(m) Disclosure would impede or interfere with an ongoing law enforcement investigation or proceeding, or compromise constitutional rights;

(n) Disclosure would result in NARA appearing to favor one litigant over another;

(o) Disclosure relates to documents that were created by another agency;

(p) A substantial Government interest is implicated;

(q) The demand is within the authority of the party making it;

(r) The demand is sufficiently specific to be answered; and

(s) Other factors, as appropriate.

### § 1251.8 Who is authorized to accept service of a subpoena demanding the production of records or testimony?

(a) Demands for testimony, except those involving an employee of NARA's Office of the Inspector General, must be addressed to, and served on, the General Counsel, National Archives and Records Administration, Suite 3110, 8601 Adelphi Road, College Park, MD 20740–6001.

(b) Demands for the testimony of an employee of NARA's Office of the Inspector General must be addressed to, and served on, the Inspector General, National Archives and Records Administration, Suite 1300, 8601 Adelphi Road, College Park, MD 20740–6001.

(c) Demands for the production of NARA operational records, except those of the Office of the Inspector General, must be addressed to, and served on, the General Counsel.

(d) Demands for records of the Inspector General must be addressed to, and served on, the Inspector General.

(e) Demands for the production of records stored in a Federal Records Center (FRC), including the National Personnel Records Center, must be addressed to, and served on, the director of the FRC where the records are stored. NARA honors the demand to the extent required by law, if the agency having legal title to the records has not imposed any restrictions. If the agency has imposed restrictions, NARA notifies the authority issuing the demand that NARA abides by the agency-imposed restrictions and refers the authority to the agency for further action.

(f) Demands for the production of materials designated as Federal archival records, Presidential records or donated historical materials administered by NARA must be addressed to, and served on either: the Assistant Archivist for Records Services—Washington, DC (for records located in Headquarters); Director of Archival Operations (for records located in the regions); or the appropriate Presidential Library Director.

(g) For matters in which the United States is a party, the Department of Justice should contact the General Counsel instead of submitting a demand for records or testimony on its own or another agency's behalf.

(h) The demanding party is responsible for complying with all service requirements, including any additional requirements contained in the Federal Rules of Civil Procedure or other statutory or regulatory authority.

(i) Contact information for each NARA facility may be found at 36 CFR part 1253.

### § 1251.10 What are the filing requirements for a demand for documents or testimony?

You must comply with the following requirements, as appropriate, whenever you issue a demand to a NARA employee for records, agency information or testimony:

(a) Your demand must be in writing and must be served on the appropriate party as identified in § 1251.8.

(b) Demands for production of records that are governed by the Privacy Act require authorization of a court of competent jurisdiction as defined in § 1251.3.

(c) Your written demand (other than a demand pursuant to the Federal Rules of Civil Procedure in a case in which NARA is a party, in which case you must comply with the requirements of that rule) must contain the following information:

(1) The caption of the legal proceeding, docket number, and name and address of the court or other authority involved;

(2) A copy of the complaint or equivalent document setting forth the assertions in the case and any other pleading or document necessary to show relevance;

(3) A list of categories of records sought, a detailed description of how the information sought is relevant to the issues in the legal proceeding, and a specific description of the substance of the testimony or records sought;

(4) A statement as to how the need for the information outweighs the need to maintain any confidentiality of the information and outweighs the burden on NARA to produce the records or provide testimony;

(5) A statement indicating that the information sought is not available from another source, from other persons or entities, or from the testimony of someone other than a NARA employee, such as a retained expert;

(6) If testimony is requested, the intended use of the testimony, a general summary of the desired testimony, and a showing that no document could be provided and used instead of testimony;

(7) A description of all previous decisions, orders, or pending motions in the case that bear upon the relevance of the requested records or testimony;

(8) The name, address, and telephone number of counsel to each party in the case; and

(9) An estimate of the amount of time that the requester and other parties may require with each NARA employee for time spent by the employee in connection with the request for testimony.

(d) NARA reserves the right to require additional information to process your demand.

(e) Your demand (other than a demand pursuant to the Federal Rules of Civil Procedure in a case in which NARA is a party, in which case you must comply with the requirements of that rule) should be submitted at least 45 days before the date that records or testimony is required. Demands submitted in less than 45 days before records or testimony is required must be accompanied by a written explanation stating the reasons for the late request and the reasons for expedited processing.

(f) Failure to cooperate in good faith to enable the General Counsel to make an informed decision may serve as the basis for a determination not to comply with your demand.

(g) The information collection contained in this section has been approved by the Office of Management and Budget under the Paperwork Reduction Act under the control number 3095–0038.

### § 1251.12 How does NARA process your demand?

(a) After service of a demand for production of records or for testimony, an appropriate NARA official reviews the demand and, in accordance with the provisions of this, determines whether, or under what conditions, to produce records or authorize the employee to testify on matters relating to agency information.

(b) NARA processes demands in the order in which we receive them. NARA will not complete and return certifications, affidavits, or similar documents submitted with a demand for records, but if requested will certify records in accordance with NARA's published fee schedule at 36 CFR part 1258. Absent exigent or unusual circumstances, NARA responds within 45 days from the date of receipt. The time for response depends upon the scope of the demand.

(c) The General Counsel may grant a waiver of any procedure described by this part where a waiver is considered

necessary to promote a significant interest of NARA or the United States or for other good cause.

### § 1251.14 Who makes the final determination on compliance with demands for records or testimony?

The General Counsel makes the final determination on demands to employees for testimony. The appropriate NARA official authorized to accept service, as described in § 1251.8, makes the final determination on demands for the production of records. The NARA official notifies the requester and, as necessary, the court or other authority of the final determination and any conditions that may be imposed on the release of records or information, or on the testimony of a NARA employee. If the NARA official deems it appropriate not to comply with the demand, the official communicates the reasons for the noncompliance as appropriate.

### § 1251.16 Are there any restrictions that apply to testimony?

(a) The General Counsel may impose conditions or restrictions on the testimony of NARA employees including, for example, limiting the areas of testimony or requiring the requester and other parties to the legal proceeding to agree that the transcript of the testimony will be kept under seal or will only be used or made available in the particular legal proceeding for which testimony was requested. The General Counsel may also require a copy of the transcript of testimony at the requester's expense.

(b) NARA may offer the employee's written declaration instead of testimony.

(c) If authorized to testify pursuant to this part, an employee may testify as to facts within his or her personal knowledge, but, unless specifically authorized to do so by the General Counsel, the employee must not:

(1) Disclose confidential or privileged information; or

(2) For a current NARA employee, testify as an expert or opinion witness with regard to any matter arising out of the employee's official duties or the functions of NARA unless testimony is being given on behalf of the United States.

### § 1251.18 Are there any restrictions that apply to the production of records?

(a) The General Counsel may impose conditions or restrictions on the release of records and agency information, including the requirement that parties to the proceeding obtain a protective order or execute a confidentiality agreement to limit access and any further disclosure. The terms of the protective order or of a confidentiality agreement must be acceptable to the General Counsel. In cases where protective orders or confidentiality agreements have already been executed, NARA may condition the release of records and agency information on an amendment to the existing protective order or confidentiality agreement.

(b) Typically, original NARA records will not be produced in response to a demand. Instead of the original records, NARA provides certified copies for evidentiary purposes (see 28 U.S.C. 1733; 44 U.S.C. 2116). Such copies must be given judicial notice and must be admitted into evidence equally with the originals from which they were made (see 44 U.S.C. 2116). If the General Counsel so determines, under exceptional circumstances, original NARA records may be made available for examination in response to a demand, but they are not to be presented as evidence.

### § 1251.20 Are there any fees associated with producing records or providing testimony?

(a) *Generally*. The General Counsel may condition the production of records or appearance for testimony upon advance payment of a reasonable estimate of the costs to NARA.

(b) *Fees for records*. Fees for producing records include fees for searching, reviewing, and duplicating records, costs of attorney time spent in reviewing the demand or request, and expenses generated by materials and equipment used to search for, produce, and copy the responsive information. Costs for employee time are calculated on the basis of the hourly pay of the employee (including all pay, allowance, and benefits). Fees for duplication are the same

as those charged by NARA in part 1258 of this title.

(c) *Witness fees.* Fees for attendance by a witness include fees, expenses, and allowances prescribed by the court's rules. If no such fees are prescribed, witness fees are determined based upon the rule of the Federal district court closest to the location where the witness appears.

(d) *Payment of fees.* (1) Witness fees for current NARA employees must be submitted to the General Counsel and made payable to the Treasury of the United States.

(2) Fees for the production of records, including records certification fees, must be submitted to the official who makes the final determination on demands for the production of records, as described in §1251.14, and made payable to the National Archives Trust Fund (NATF).

(3) Applicable fees paid to former NARA employees providing testimony should be paid directly to the former employee in accordance with 28 U.S.C. 1821 or other applicable statutes.

(e) *Certification (authentication) of copies of records.* NARA may certify that records are true copies in order to facilitate their use as evidence. Request certified copies from NARA at least 45 days before the date they are needed. We charge a certification fee for each document certified.

(f) *Waiver or reduction of fees.* The General Counsel, in his or her sole discretion, may, upon a showing of good cause, waive or reduce any fees in connection with the testimony, production, or certification of records.

(g) *De minimis fees.* Fees are not assessed if the total charge is $10.00 or less, or as otherwise stated in NARA policy.

### §1251.22 Are there any penalties for providing records or testimony in violation of this part?

(a) An employee who discloses official records or information or gives testimony relating to official information, except as expressly authorized by NARA or as ordered by a Federal court after NARA has had the opportunity to be heard, may face the penalties provided in 18 U.S.C. 641 and other applicable laws. Additionally, former NARA employees are subject to the restrictions and penalties of 18 U.S.C. 207 and 216.

(b) A current NARA employee who testifies or produces official records and information in violation of this part is subject to disciplinary action.

## PART 1252—PUBLIC USE OF RECORDS, DONATED HISTORICAL MATERIALS, AND FACILITIES; GENERAL

Sec.
1252.1 Scope.
1252.2 Definitions.

AUTHORITY: 44 U.S.C. 2104(a).

### §1252.1 Scope.

This subchapter prescribes rules and procedures governing the public use of records and donated historical materials in the custody of the National Archives and Records Administration (NARA). Except for part 1250, this subchapter does not apply to current operating records of NARA. This subchapter also prescribes rules and procedures governing the public use of certain NARA facilities.

[59 FR 29191, June 6, 1994]

### §1252.2 Definitions.

The following definitions are established for terms used in this subchapter.

*Archives or archival records* mean Federal records that have been determined by NARA to have sufficient historical or other value to warrant their continued preservation by the U.S. Government, and have been transferred to the National Archives of the United States.

*Director* means the head of a Presidential library, the head of a Presidential Materials Staff, the head of a NARA division, branch, archival center, or unit responsible for servicing archival records, the head of a regional archives, or the head of a Federal records center.

*Documents* mean, for purposes of part 1254 of this chapter, archives, FRC records, donated historical materials, Nixon Presidential historical materials, and Presidential records, regardless of the media on which they are contained. Document form may include

paper, microforms, photographs, sound recordings, motion pictures, maps, drawings, and electronic files.

*Donated historical materials* means books, correspondence, documents, papers, pamphlets, magnetic tapes, pictures, photographs, plats, maps, films, motion pictures, sound recordings, and other documental media having historical or commemorative value accepted by NARA from a source other than an agency of the U.S. Government.

*Federal records center* includes the Washington National Records Center, the National Personnel Records Center, and the Federal records centers listed in § 1253.6 of this chapter.

*Federal records center records (FRC records)* mean records which, pending their transfer to the National Archives of the United States or their disposition in any other manner authorized by law, have been transferred to a Federal records center operated by NARA.

*Nixon Presidential historical materials* has the meaning specified in § 1275.16 of this chapter.

*Presidential records* has the meaning specified in § 1270.14 of this chapter.

*Records* mean records or microfilm copies of records transferred to NARA under 44 U.S.C. 2107 and 3103; namely, archives and Federal records center records as the terms are defined in § 1252.2. The term *records* does not include current operating records of NARA, the public availability of which is governed by part 1250 of this chapter, or donated historical materials as defined in this section.

*Researcher* means a person who has been granted access to original documents or copies of documents.

[33 FR 4885, Mar. 22, 1968, 42 FR 13022, Mar. 8, 1977, and 49 FR 33253, Aug. 22, 1984. Redesignated and amended at 50 FR 15723, 15726, Apr. 19, 1985; 59 FR 29191, June 6, 1994]

## PART 1253—LOCATION OF NARA FACILITIES AND HOURS OF USE

Sec.

1253.1 National Archives Building.
1253.2 National Archives at College Park.
1253.3 Presidential Libraries.
1253.4 Washington National Records Center.
1253.5 National Personnel Records Center.
1253.6 Records Centers.
1253.7 Regional Archives.
1253.8 Federal Register.
1253.9 Federal Holidays.
1253.10 Notification Process for Changes in Hours.

AUTHORITY: 44 U.S.C. 2104(a).

SOURCE: 75 FR 71545, Nov. 24, 2010, unless otherwise noted.

### § 1253.1 National Archives Building.

The National Archives Building is located at 700 Pennsylvania Avenue, NW., Washington, DC 20408. Hours for the Research Center and the Central Research Room are posted at *http://www.archives.gov*. The exhibit areas' hours of operation are also posted at *http://www.archives.gov*. Last admission to the exhibit areas of the building will be no later than 30 minutes before the stated closing hour. The phone number for the National Archives Building is 202–357–5000.

### § 1253.2 National Archives at College Park.

The National Archives at College Park is located at 8601 Adelphi Road, College Park, MD 20740–6001. Hours for the Research Center are posted at *http://www.archives.gov*. The phone number for the Research Center is 800–234–8861.

### § 1253.3 Presidential Libraries.

Hours for the Presidential libraries' research rooms are posted at *http://www.archives.gov*. The Presidential library museums are open every day except Thanksgiving, December 25, and January 1 (with the exception of the Lyndon Baines Johnson Library which is only closed December 25). For more specific information about museum hours, please contact the libraries directly or visit the NARA Web site at *http://www.archives.gov*. Contact information for each library is as follows:

(a) Herbert Hoover Library is located at 210 Parkside Dr., West Branch, IA (mailing address: P.O. Box 488, West Branch, IA 52358–0488). The phone number is 319–643–5301 and the fax number is 319–643–6045. The e-mail address is *hoover.library@nara.gov*.

(b) Franklin D. Roosevelt Library is located at 4079 Albany Post Rd., Hyde Park, NY 12538–1999. The phone number is 800–FDR–VISIT or 845–486–7770 and the fax number is 845–486–1147. The e-

mail address is *roosevelt.library@nara.gov*.

(c) Harry S. Truman Library is located at 500 W. U.S. Hwy 24, Independence, MO 64050–1798. The phone number is 800–833–1225 or 816–268–8200 and the fax number is 816–268–8295. The e-mail address is *truman.library@nara.gov*.

(d) Dwight D. Eisenhower Library is located at 200 SE. Fourth Street, Abilene, KS 67410–2900. The phone number is 877–RING–IKE or 785–263–4751 and the fax number is 785–263–6718. The e-mail address is *eisenhower.library@nara.gov*.

(e) John Fitzgerald Kennedy Library is located at Columbia Point, Boston, MA 02125–3398. The phone number is 866–JFK–1960 or 617–514–1600 and the fax number is 617–514–1652. The e-mail address is *kennedy.library@nara.gov*.

(f) Lyndon Baines Johnson Library and Museum is located at 2313 Red River St., Austin, TX 78705–5702. The phone number is 512–721–0200 and the fax number is 512–721–0170. The e-mail address is *johnson.library@nara.gov*.

(g) Richard Nixon Library, California is located at 18001 Yorba Linda Boulevard, Yorba Linda, CA 92886–3903. The phone number is 714–983–9120 and the fax number is 714–983–9111. The e-mail address is *nixon@nara.gov*. Richard Nixon Library, Maryland is located at 8601 Adelphi Road, College Park, MD 20740–6001. The phone number is 301–837–3290 and the fax number is 301–837–3202. The e-mail address is *nixon@nara.gov*.

(h) Gerald R. Ford Library is located at 1000 Beal Avenue, Ann Arbor, MI 48109–2114. The phone number is 734–205–0555 and the fax number is 734–205–0571. The e-mail address is *ford.library@nara.gov*. Gerald R. Ford Museum is located at 303 Pearl St., Grand Rapids, MI 49504–5353. The phone number is 616–254–0400 and the fax number is 616–254–0386. The e-mail address is *ford.museum@nara.gov*.

(i) Jimmy Carter Library is located at 441 Freedom Parkway, Atlanta, GA 30307–1498. The phone number is 404–865–7100 and the fax number is 404–865–7102. The e-mail address is *carter.library@nara.gov*.

(j) Ronald Reagan Library is located at 40 Presidential Dr., Simi Valley, CA 93065–0699. The phone number is 800–410–8354 or 805–577–4000 and the fax number is 805–577–4074. The e-mail address is *reagan.library@nara.gov*.

(k) George Bush Library is located at 1000 George Bush Drive West, College Station, TX 77845. The phone number is 979–691–4000 and the fax number is 979–691–4050. The e-mail address is *bush.library@nara.gov*.

(l) William J. Clinton Library is located at 1200 President Clinton Avenue, Little Rock, AR 72201. The phone number is 501–374–4242 and the fax number is 501–244–2883. The e-mail address is *clinton.library@nara.gov*.

### § 1253.4 Washington National Records Center.

Washington National Records Center is located at 4205 Suitland Road, Suitland, MD (mailing address: Washington National Records Center, 4205 Suitland Road, Suitland, MD, 20746–8001). The hours are posted at *http://www.archives.gov*. The phone number is 301–778–1600.

### § 1253.5 National Personnel Records Center.

(a) *Military Personnel Records*. NARA—National Personnel Records Center—Military Personnel Records is located at 9700 Page Ave., St. Louis, MO 63132–5100. The hours are posted at *http://www.archives.gov*.

(b) *Civilian Personnel Records*. NARA—National Personnel Records Center—Civilian Personnel Records is located at 111 Winnebago St., St. Louis, MO 63118–4199. The hours are posted at *http://www.archives.gov*.

### § 1253.6 Records Centers.

Hours for records center research rooms are posted at *http://www.archives.gov*. Contact information for each center is as follows:

(a) NARA—Northeast Region (Boston) is located at the Frederick C. Murphy Federal Center, 380 Trapelo Rd., Waltham, MA 02452–6399. The telephone number is 781–663–0139.

(b) NARA—Northeast Region (Pittsfield, MA) is located at 10 Conte Drive, Pittsfield, MA 02101. The telephone number is 413–236–3600.

(c) NARA—Mid Atlantic Region (Northeast Philadelphia) is located at 14700 Townsend Rd., Philadelphia, PA

19154–1096. The telephone number is 215–305–2000.

(d) NARA—Southeast Region (Atlanta) is located at 4712 Southpark Blvd., Ellenwood, GA 30294. The telephone number is 404–736–2820.

(e) NARA—Great Lakes Region (Dayton) is located at 3150 Springboro Road, Dayton, OH 45439. The telephone number is 937–425–0600.

(f) NARA—Great Lakes Region (Dayton-Miamisburg) is located at 8801 Kingsridge Drive, Dayton, OH 45458. The telephone number is (937) 425–0601.

(g) NARA—Great Lakes Region (Chicago) is located at 7358 S. Pulaski Rd., Chicago, IL 60629–5898. The telephone number is 773–948–9000.

(h) NARA—Central Plains Region (Lee's Summit, MO) is located at 200 Space Center Drive, Lee's Summit, MO 64064–1182. The telephone number is 816–823–6272.

(i) NARA—Central Plains Region (Lenexa) is located at 17501 W. 98th Street, Lenexa, KS 66219. The telephone number is 913–563–7600.

(j) NARA—Southwest Region (Fort Worth) is located at 1400 John Burgess Drive, Fort Worth, Texas 76140. The telephone number is 817–551–2000.

(k) NARA—Rocky Mountain Region (Denver) is located at Building 48, Denver Federal Center, West 6th Ave. and Kipling Street, Denver, CO (mailing address: P.O. Box 25307, Denver, CO 80225–0307). The telephone number is 303–407–5700.

(l) NARA—Pacific Region (San Francisco) is located at 1000 Commodore Dr., San Bruno, CA 94066–2350. The telephone number is 650–238–3500.

(m) NARA—Pacific Region (Riverside) is located at 23123 Cajalco Road, Perris, CA 92570–7298. The telephone number is 951–956–2000.

(n) NARA—Pacific Alaska Region (Seattle) is located at 6125 Sand Point Way, NE., Seattle, WA 98115–7999. The telephone number is 206–336–5115.

### § 1253.7 Regional Archives.

Hours for regional archives research rooms, including extended hours for microfilm research only, are posted at *http://www.archives.gov*. Contact information for each regional archives facility is as follows:

(a) The National Archives at Boston is located in the Frederick C. Murphy Federal Center, 380 Trapelo Rd., Waltham, MA 02452. The telephone number is 781–663–0144 or Toll Free 1–866–406–2379. The National Archives at Boston, Pittsfield Annex is located at 10 Conte Drive, Pittsfield, MA 01201–8230. The telephone number is 413–236–3600.

(b) The National Archives at New York City is located at 201 Varick St., New York, NY 10014–4811 (entrance is on Houston Street, between Varick and Hudson). The telephone number is 212–401–1620 or Toll Free 1–866–840–1752.

(c) The National Archives at Philadelphia is located at the Robert N.C. Nix Federal Building, 900 Market St., Philadelphia, PA 19107–4292 (entrance is on Chestnut Street between 9th and 10th Streets). The telephone number is 215–606–0100.

(d) The National Archives at Atlanta is located at 5780 Jonesboro Road, Morrow, GA 30260. The telephone number is 770–968–2100.

(e) The National Archives at Chicago is located at 7358 S. Pulaski Rd., Chicago, IL 60629–5898. The telephone number is 773–948–9000.

(f) The National Archives at Kansas City is located at 400 West Pershing Road, Kansas City, MO 64108. The telephone number is 816–268–8000.

(g) The National Archives at Fort Worth is located at 501 West Felix St., Bldg. 1, Dock 1, Fort Worth, TX (mailing address: P.O. Box 6216, Fort Worth, TX, 76115–0216). The telephone number is 817–334–5525.

(h) The National Archives at Denver: The textual research room is located at Building 48, Denver Federal Center, West 6th Ave. and Kipling Street, Denver, CO. The telephone number is 303–407–5740. The microfilm research room is located at Building 46, Denver Federal Center, West 6th Ave. and Kipling Street, Denver, CO. (mailing address: P.O. Box 25307, Denver, CO 80225–0307). The telephone number is 303–407–5751.

(i) The National Archives at Riverside is located at 23123 Cajalco Road, Perris, CA 92570–7298. The telephone number is 951–956–2000.

(j) The National Archives at San Francisco is located at 1000 Commodore Dr., San Bruno, CA 94066–2350. The telephone number is 650–238–3501.

(k) The National Archives at Seattle is located at 6125 Sand Point Way, NE., Seattle, WA 98115–7999. The telephone number is 206–336–5115.

(l) The National Archives at Anchorage is located at 654 West Third Avenue, Anchorage, AK 99501–2145. The telephone number is 907–261–7820.

(m) The National Archives at St. Louis, the National Personnel Records Center archival research room is located at 9700 Page Ave., St. Louis, MO 63132–5100. The telephone number is 314–801–9195.

### § 1253.8 Federal Register.

The location and business hours of the Office of the Federal Register are posted at *http://www.archives.gov*, and codified in 1 CFR 2.3.

### § 1253.9 Federal holidays.

(a) NARA research rooms are closed on all Federal holidays.

(b) The exhibit areas in the National Archives Building are closed on Thanksgiving and December 25.

(c) The Presidential library museums are open every day except Thanksgiving, December 25, and January 1 (with the exception of the Lyndon Baines Johnson Library which is only closed December 25).

### § 1253.10 Notification process for changes in hours.

(a) NARA will follow the procedure found in § 1253.10(c) when proposing to change hours of operations for research rooms, exhibit areas and museums, except as noted in § 1253.10(d).

(b) Changing hours of operations for research rooms, exhibit areas and museums may not be arbitrary. Proposed changes must be documented by evidence of a business need to change the hours of operation.

(c) The notification process must proceed as follows:

(1) Post a notice on *http://www.archives.gov*.

(2) Post notices in areas visible to the public in their research room, exhibit areas or museum.

(3) Issue a press release, e-mail notification, or other means normally used by that unit to notify the public of events at their location.

(4) These notices will provide written determination justifying the change in hours.

(d) In the event that emergency changes to hours of operations for research rooms, exhibit areas and museums are necessary, including but not limited to inclement weather, NARA units will give as much advance notice to the public as possible. Emergency notification will be posted at *http://www.archives.gov*.

# PART 1254—USING RECORDS AND DONATED HISTORICAL MATERIALS

## Subpart A—General Information

Sec.
1254.1 What kinds of archival materials may I use for research?
1254.2 Does NARA provide information about documents?
1254.4 Where and when are documents available to me for research?
1254.6 Do I need a researcher identification card to use archival materials at a NARA facility?
1254.8 What information do I need to provide when applying for a researcher identification card?
1254.10 For how long and where is my researcher identification card valid?
1254.12 Will NARA log or inspect my computer, other equipment, and notes?
1254.14 Are some procedures in regional archives and Presidential libraries different from those in the Washington, DC, area?

## Subpart B—Research Room Rules

GENERAL PROCEDURES

1254.20 What general policies apply in all NARA facilities where archival materials are available for research?
1254.22 Do I need to register when I visit a NARA facility for research?
1254.24 Whom does NARA allow in research rooms?
1254.26 What can I take into a research room with me?
1254.28 What items are not allowed in research rooms?
1254.30 Does NARA provide any supplies?
1254.32 What rules apply to public access use of the Internet on NARA-supplied computers?

RULES RELATING TO USING ORIGINAL DOCUMENTS

1254.34 What are my responsibilities when using documents?

1254.36 What care must I take when handling documents?
1254.38 How do I keep documents in order?
1254.40 How does NARA prevent removal of documents?

RULES RELATING TO USING MICROFILM

1254.42 What are the rules that apply to using self-service microfilm?
1254.44 How long may I use a microfilm reader?

OTHER CONDUCT RULES

1254.46 Are there other rules of conduct that I must follow?
1254.48 When does NARA revoke research privileges?
1254.50 Does NARA consider reinstating research privileges?
1254.52 Can NARA extend the period of revoked research privileges?

Subpart C—Copying Archival Materials

GENERAL INFORMATION

1254.60 What are NARA's copying services?
1254.62 Does NARA have archival materials protected by copyright?
1254.64 Will NARA certify copies?

RULES RELATING TO SELF-SERVICE COPYING

1254.70 How may I make my own copies of documents?
1254.72 What procedures do I follow to copy documents?
1254.74 What documents are unsuitable for copying on a self-service or personal copier or scanner?
1254.76 What procedures do I follow to copy formerly national security-classified documents?

RULES RELATING TO USING COPYING EQUIPMENT

1254.80 Does NARA allow me to use scanners or other personal copying equipment?
1254.82 What limitations apply to my use of self-service card-operated copiers?
1254.84 How may I use a debit card for copiers in the Washington, DC, area?
1254.86 May I use a personal paper-to-paper copier at the National Archives at College Park?
1254.88 What are the rules for the Motion Picture, Sound, and Video Research Room at the National Archives at College Park?

Subpart D—Microfilming Archival Materials

1254.90 What is the scope of this subpart?
1254.92 How do I submit a request to microfilm records and donated historical materials?
1254.94 What must my request include?
1254.96 What credits must I give NARA?
1254.98 May NARA make subsequent use of my publication?
1254.100 How does NARA evaluate requests?
1254.102 What requests does NARA not approve?
1254.104 How does NARA determine fees to prepare documents for microfilming?
1254.106 What are NARA's equipment standards?
1254.108 What are NARA's requirements for the microfilming process?
1254.110 Does NARA ever rescind permission to microfilm?

AUTHORITY: 44 U.S.C. 2101–2118.

SOURCE: 69 FR 39314, June 30, 2004, unless otherwise noted.

## Subpart A—General Information

### § 1254.1 What kinds of archival materials may I use for research?

(a) The National Archives and Records Administration (NARA) preserves records of all three branches (Executive, Legislative, and Judicial) of the Federal Government in record groups that reflect how government agencies created and maintained them. Most of these records are of Executive Branch agencies. We also have individual documents and collections of donated historical materials that significantly supplement existing records in our custody or provide information not available elsewhere in our holdings. Descriptions of many of our records are available through our Web site, *http://www.archives.gov*.

(b) We provide information about records and we make them available to the public for research unless they have access restrictions. Some records may be exempt from release by law. Donors may apply restrictions on access to historical materials that they donate to NARA. Access restrictions are further explained in part 1256 of this chapter. We explain procedures for obtaining information about records in § 1254.2.

(c) In addition to traditional paper (textual) materials, our holdings also include special media materials such as microfilm, still pictures, motion pictures, sound and video recordings, cartographic and architectural records, and electronic records. The majority of these materials are housed at the National Archives at College Park, 8601 Adelphi Road, College Park, MD 20740–

6001. Many of these types of materials also are represented in the holdings of our Presidential libraries and our regional archives facilities listed in part 1253 of this chapter.

(d) The majority of our archival materials are 30 years old or older.

(e) Records creating agencies hold the legal title and control access to records housed in NARA records centers. Our procedures to obtain access to these records are in § 1256.2.

### § 1254.2 Does NARA provide information about documents?

(a) Upon request, we provide overall information about our holdings or about specific documents, if the time required to furnish the information is not excessive and if the information is not restricted (see part 1256 of this chapter). For anyone unable to visit, we may provide information contained in specific documents by offering copies of the documents for a fee (see § 1254.60).

(b) Requests must be on designated forms when we require them. The Office of Management and Budget (OMB) approves these forms as information collections and the forms bear the approved control number.

(c) If requests that we receive in the normal course of reference service do not specifically cite the Freedom of Information Act (5 U.S.C. 552, as amended), we do not consider those requests made under the Act. To make a request under the Act, follow the procedures in part 1250 of this chapter.

### § 1254.4 Where and when are documents available to me for research?

(a) You may obtain general information about the location of records by visiting the NARA Web site at *www.archives.gov;* writing to the National Archives and Records Administration (NWCC2), 8601 Adelphi Road, College Park, MD 20740–6001; completing our Inquire form at *http://www.archives.gov/global_pages/inquire_form.html;* sending a fax request to (301) 837–0483; or calling (202) 501–5400, (301) 837–2000, or toll free (866) 272–6272.

(b) The locations of NARA's research rooms are shown in part 1253 of this chapter. Hours for research rooms are posted at *http://www.archives.gov*. Contact our facilities directly for information about their particular holdings. A facility or unit director may authorize that documents be made available at times other than the times specified.

(c) Before planning a visit, contact the facility holding materials of potential interest to determine whether the documents are available, whether there are enough documents to warrant a visit, or whether ordering copies would be more practical.

(d) In addition to the procedures in this part, researchers who wish to use archival materials that contain national security classified information must follow procedures in part 1256 of this chapter.

[69 FR 39314, June 30, 2004, as amended at 75 FR 71547, Nov. 24, 2010]

### § 1254.6 Do I need a researcher identification card to use archival materials at a NARA facility?

(a) Yes, you need a researcher identification card to use original archival materials at a NARA facility. See §§ 1254.8 and 1254.10 for information on obtaining a card.

(b) You also need a researcher identification card if you wish to use only microfilm copies of documents at NARA's Washington, DC, area facilities and in any NARA facility where the microfilm research room is not separate from the textual research room.

(c) If you are using only microfilm copies of records in some regional archives where the microfilm research room is separate from the textual room, you do not need an identification card but you must register as described in § 1254.22.

[69 FR 39314, June 30, 2004, as amended at 75 FR 10415, Mar. 8, 2010]

### § 1254.8 What information do I need to provide when applying for a researcher identification card?

(a) You must apply in person and show identification containing your picture or physical description, such as a driver's license or school identification card. You also must provide proof of your current address, such as a bank statement, utility bill, or department of motor vehicles change of address

card, if the address on your driver's license or other identification is not current. Students who consider the home of their parents as their permanent address, but who do not live there during the academic session, must provide their current student address. If you travel long distance to conduct research in original archival materials at a NARA facility, we may ask you how we can contact you locally. In special circumstances, the director of a facility or unit has the authority to grant exceptions to these requirements.

(b) If you apply for access to large quantities of documents or to documents that are especially fragile or valuable, we may require you to furnish additional information about reasons why you require access. Some materials are too fragile or valuable for direct handling or viewing. Preservation concerns (*see* §§ 1254.20(b) and 1254.36(e)) and availability of resources (*see* § 1254.20(c)) may limit our ability to accommodate certain requests.

(c) If you are younger than 14, you must follow the procedures in § 1254.24 to seek permission to conduct research.

(d) We do not issue you a researcher identification card if the appropriate supervisor or director of the NARA facility determines that the documents that you wish to use are not in the legal custody of NARA and you do not present appropriate written authorization from the legal title holder to examine the documents.

(e) The collection of information contained in this section has been approved by the Office of Management and Budget with the control number 3095–0016.

### § 1254.10 For how long and where is my researcher identification card valid?

(a) Your card is valid for 1 year and may be renewed. Cards we issue at one NARA facility are valid at each facility, except as described in paragraph (b) of this section. Cards are not transferable and you must present your card if a guard or research room attendant requests to see it.

(b) At NARA facilities in the Washington, DC, area and other NARA facilities that issue and use plastic researcher identification cards as part of their security systems, we issue a plastic card to replace the paper card issued at some NARA facilities at no charge. The plastic card is valid at all NARA facilities.

[69 FR 39314, June 30, 2004, as amended at 75 FR 10415, Mar. 8, 2010]

### § 1254.12 Will NARA log or inspect my computer, other equipment, and notes?

(a) If you bring personal computers, scanners, tape recorders, cameras, and other equipment into our facilities, we will inspect the equipment.

(1) In the Washington, DC, area, you must complete the Equipment Log at the guard's desk. The guard checks the log for proof of your personal ownership before you remove your equipment from the building.

(2) In the regional archives and Presidential libraries, we may tag your equipment after inspection and approval.

(b) Not all NARA facilities permit you to take your personal notes into the research room. In research rooms that permit taking in your notes, a NARA or contractor employee may stamp, initial, and date notes and other research materials we approve for admission to indicate that they are your personal property.

(c) We inspect your personal property, including notes, electrostatic copies, equipment cases, tape recorders, cameras, personal computers, and other property, before you may remove them from our research rooms or facilities.

### § 1254.14 Are some procedures in regional archives and Presidential libraries different from those in the Washington, DC, area?

Yes, the variety of facilities, locations of research rooms, room sizes, and other factors contribute to differences in some, but not all, practices from the Washington, DC, area. When the appropriate regional director of archival operations or Presidential library director indicates, you must follow the procedures in regional archives and Presidential library archival research rooms where researchers use original documents. These procedures are in addition to the procedures we

specify elsewhere in this part. The procedures are either posted in the facility or the staff gives copies of them to researchers.

## Subpart B—Research Room Rules

GENERAL PROCEDURES

### § 1254.20 What general policies apply in all NARA facilities where archival materials are available for research?

(a) Researchers may use original documents only in the designated research room at the facility where they are stored.

(b) Researchers must use microfilm copies or other alternative copies of documents when available, rather than the original documents. Some of our microfilm publications are available in more than one NARA facility.

(c) We may limit the quantity of documents that we deliver to you at one time. In some research rooms, we furnish records according to a specific time schedule.

### § 1254.22 Do I need to register when I visit a NARA facility for research?

(a) Yes, you must register each day you enter a NARA research facility by furnishing the information on the registration sheet or scanning an encoded researcher identification card. We may ask you for additional personal identification.

(b) NARA facilities in the Washington, DC, area contain several research rooms; you must register in each research room you visit on a daily basis.

(c) In regional archives, you also sign out when leaving the research room for the day. In some Presidential libraries, where we instruct you to do so, you sign out when you leave the building.

[69 FR 39314, June 30, 2004, as amended at 75 FR 10415, Mar. 8, 2010]

### § 1254.24 Whom does NARA allow in research rooms?

(a) We limit admission to research rooms in our facilities to individuals examining or copying documents and other materials.

(b) We do not admit children under the age of 14 to these research rooms unless we grant them research privileges (*see* paragraph (d) of this section).

(c) The appropriate supervisor may make exceptions for a child who is able to read and who will be closely supervised by an adult while in the research room. The adult must agree in writing to be present when the child uses documents and to be responsible for compliance with the research room and copying rules in subparts B and C of this part.

(d) Students under the age of 14 who wish to perform research on original documents must apply in person at the facility where the documents are located. At the National Archives Building, apply to the chief of the Research Support Branch (NWCC1). At the National Archives at College Park, apply to the chief of the Research Support Branch (NWCC2). For regional archives and Presidential libraries, apply to the appropriate supervisor or archivist in charge. We may require either that the student must present a letter of reference from a teacher or that an adult accompany the student while doing research. Students may contact NARA by phone, e-mail, fax, or letter in advance of their visit to discuss their eligibility for research privileges. Current contact information for our facilities is available on our Web site, *http://www.archives.gov*.

(e) We may permit adults and children participating in scheduled tours or workshops in our research rooms when they do not handle any documents that we show to them. These visitors do not need a researcher identification card.

### § 1254.26 What can I take into a research room with me?

(a) *Personal belongings*. You may take a hand-held wallet and coin purse for the carrying of currency, coins, credit cards, keys, driver's license, and other identification cards into research rooms, but these are subject to inspection when you enter or leave the room. The guard or research room attendant determines whether your wallet or purse is sufficiently small for purposes of this section. You may take cell

phones, pagers, and similar telecommunications devices into a research room only under the circumstances cited in § 1254.46(b) and, for cell phone cameras, in § 1254.70(g).

(b) *Notes and reference materials.* You may take notes, references, lists of documents to be consulted, and other materials into a research room if the supervisor administering the research room or the senior staff member on duty in the research room determines that they are essential to your work requirements. Not all facilities permit you to take notes into the research room. In facilities that allow you to bring notes, staff may stamp your items to indicate that they are your property.

(c) You may bring back into the research room on subsequent visits your research notes made on notepaper and notecards we provide and electrostatic copies you make on copying machines in NARA research rooms which are marked with the statement ''Reproduced at the National Archives.'' You must show any notes and copies to the research room attendant for inspection when you enter the research room.

(d) Personal equipment. The research room attendant, with approval from the supervisor, archivist, or lead archives technician in charge of the room, may admit personal computers, tape recorders, scanners, cameras, and similar equipment if the equipment meets NARA's approved standards for preservation. We do not approve the use of any equipment that could potentially damage documents. If demand to use equipment exceeds the space available for equipment use, we may impose time limits. If you wish to use computers, sound recording devices, or other equipment, you must work in areas the research room attendant designates, when required.

### § 1254.28 What items are not allowed in research rooms?

(a) You may not bring into the research rooms overcoats, raincoats, jackets, hats, or other outerwear; personal paper-to-paper copiers, unless permitted in accordance with § 1254.86 of this part; briefcases, satchels, valises, suitcases, day packs, purses, boxes, or similar containers of personal property. We may make exceptions for headwear worn for religious or health reasons. In facilities where we provide notepaper and notecards, you also may not bring into the research room notebooks, notepaper, notecards, folders or other containers for papers.

(b) You may store personal items at no cost in lockers or other storage facilities in the NARA facility. These lockers or other storage facilities are available on a first-come-first-served basis.

(c) You must remove your personal belongings each night from the lockers or other storage facilities we provide to hold them. If you do not remove your personal belongings, NARA personnel will remove them. We post directions for reclaiming confiscated items near the lockers or other storage facilities.

(d) NARA is not responsible for the loss or theft of articles you store in the lockers.

(e) We may charge a replacement fee for lost locker keys.

(f) Knives and other sharp objects such as box cutters, razors, or wire are not permitted in our research rooms.

### § 1254.30 Does NARA provide any supplies?

Yes, in most facilities NARA furnishes you, without charge, pencils and specially marked lined and unlined notepaper and notecards, for use in the research rooms. NARA also provides diskettes and paper for our public access computers. Return unused pencils and notepaper, notecards, diskettes, and printer paper to the research room attendant at the end of the day.

### § 1254.32 What rules apply to public access use of the Internet on NARA-supplied computers?

(a) Public access computers (workstations) are available for Internet use in all NARA research rooms. The number of workstations varies per location. We provide these workstations for research purposes on a first-come-first-served basis. When others are waiting to use the workstation, we may impose a 30-minute time limit on the use of the equipment.

(b) You should not expect privacy while using these workstations. These

workstations are operated and maintained on a United States Government system, and activity may be monitored to protect the system from unauthorized use. By using this system, you expressly consent to such monitoring and the reporting of unauthorized use to the proper authorities.

(c) You may not use these workstations to gain access to entertainment or other inappropriate Web sites in our research rooms. You also may not use these workstations to conduct private business not related to your research or NARA holdings.

(d) NARA provides at least one Internet access workstation in each facility that complies with the Workforce Investment Act of 1998, ensuring comparable accessibility to individuals with disabilities.

(e) You may download information to a diskette and print materials, but the research room staff will furnish the diskettes and paper. You may not use personally owned diskettes on NARA personal computers. You may not load files or any type of software on these workstations.

RULES RELATING TO USING ORIGINAL DOCUMENTS

### § 1254.34 What are my responsibilities when using documents?

(a) You must sign for the documents you receive and we may require you to show your researcher identification card.

(b) You are responsible for the proper handling of and prevention of damage to all documents delivered to you until you return them. Specific handling instructions are given in §§ 1254.36 and 1254.38.

(c) When you finish using the documents, you must return them to the research room attendant.

(d) You must not remove the reference service slip that accompanies the documents to the research room.

(e) If we ask, you must return documents up to 15 minutes before closing time.

(f) Before leaving a research room, even for a short time, you must notify the research room attendant and place all documents in their proper containers.

### § 1254.36 What care must I take when handling documents?

To prevent damage to documents, we have rules relating to the physical handling of documents.

(a) You must use only pencils in research rooms where original documents are used.

(b) You must not lean on, write on, refold, trace, or otherwise handle documents in any way likely to cause damage.

(c) You must follow any additional rules that apply to the use of special media records at our facilities, such as wearing cotton gloves we provide you for handling still pictures and any original film-based materials.

(d) You must identify documents for reproduction only with a paper tab that we provide you. You must not use paper clips, rubber bands, self-stick notes or similar devices to identify documents.

(e) You must use exceptionally valuable or fragile documents only under conditions the research room attendant specifies.

(f) You must request that research room personnel unstaple or remove other fasteners from documents that cannot otherwise be read.

(g) If you notice damage to any document(s), notify the research room attendant immediately.

### § 1254.38 How do I keep documents in order?

(a) You must keep unbound documents in the order in which we deliver them to you.

(b) You must not attempt to rearrange documents that appear to be in disorder. Instead, you must refer any suspected problems with the records to the research room attendant.

(c) You may use only one folder at a time.

(d) Remove documents from only one container at a time.

### § 1254.40 How does NARA prevent removal of documents?

(a) You must not remove documents from a research room. Removing, mutilating, or revising or otherwise altering documents is forbidden by law and is punishable by fine or imprisonment or both (18 U.S.C. 2071).

(b) Upon leaving the research room or facility, you must present for examination any article that could contain documents or microfilm, as well as presenting copies or notes to ensure that no original records are mixed in with them.

(c) To ensure that no one unlawfully removes or mutilates documents, NARA may post at the entrance to research rooms instructions supplementing the rules in this part. These instructions are specific to the kinds of records you use or to the facility where the records are stored.

RULES RELATING TO USING MICROFILM

### § 1254.42 What are the rules that apply to using self-service microfilm?

NARA makes available microfilm copies of many records on a self-service basis.

(a) When microfilm is available on a self-service basis, research room attendants assist you in identifying research sources on microfilm and provide information concerning how to locate and retrieve the roll(s) of film containing the information of interest. You are responsible for retrieving and examining the roll(s).

(b) Unless you require assistance in learning how to operate microfilm reading equipment or have a disability, we expect you to install the microfilm on the reader, rewind it when finished, remove it from the reader, and return it to the proper microfilm box. You must carefully remove from and return to the proper microfilm boxes rewound microfilm. You must take care when loading and unloading microfilm from microfilm readers. Report damaged microfilm to the research room attendant as soon you discover it.

(c) Unless we make an exception, you may use only one roll of microfilm at a time.

(d) After using each roll, you must return the roll of microfilm to the location from which you removed it, unless we otherwise instruct you.

(e) You should bring to the attention of the research room attendant any microfilm you find in the wrong box or file cabinet.

### § 1254.44 How long may I use a microfilm reader?

(a) Use of the microfilm readers in the National Archives Building is on a first-come-first served basis.

(b) Archival operations directors at our regional archives may permit reservations for use of microfilm readers and set time limits on use to meet local circumstances.

[69 FR 39314, June 30, 2004, as amended at 75 FR 10415, Mar. 8, 2010]

OTHER CONDUCT RULES

### § 1254.46 Are there other rules of conduct that I must follow?

(a) Part 1280 specifies conduct rules for all NARA facilities. You must also obey any additional rules supplementing Subpart B of part 1254 that are posted or distributed by the facility director.

(b) You may not eat, drink, chew gum, smoke, or use smokeless tobacco products, or use a cell phone, pager, or similar communications device that emits sound signals in a research room. Communications devices must be in vibrate mode. You must make and receive telephone calls outside of research rooms.

(c) We prohibit loud talking and other activities likely to disturb other researchers.

### § 1254.48 When does NARA revoke research privileges?

(a) Behaviors listed in paragraphs (a)(1) through (a)(4) of this section may result in NARA denying or revoking research privileges.

(1) Refusing to follow the rules and regulations of a NARA facility;

(2) Demonstrating by actions or language that you present a danger to documents or NARA property;

(3) Presenting a danger to other researchers, NARA or contractor employees, or volunteers; or

(4) Verbally or physically harassing or annoying other researchers, NARA or contractor employees, or volunteers.

(b) Denying or revoking research privileges means:

(1) We may deny or revoke your research privileges for up to 180 days;

(2) You lose research privileges at all NARA research rooms nationwide; and

(3) You lose your valid researcher identification card if you already have one.

(c) We notify all NARA facilities of the revocation of your research privileges.

(d) If we revoke your research privileges, we send you a written notice of the reasons for the revocation within 3 working days of the action.

### § 1254.50 Does NARA consider reinstating research privileges?

(a) You have 30 calendar days after the date of revocation to appeal the action in writing and seek reinstatement of research privileges. Mail your appeal to: Deputy Archivist of the United States, 8601 Adelphi Road, College Park, MD 20740–6001.

(b) The Deputy Archivist has 30 calendar days from receipt of an appeal to decide whether to reinstate your research privileges and to respond to you in writing.

(c) If the Deputy Archivist upholds the revocation of privileges or if you do not appeal, you may request in writing reinstatement of research privileges no earlier than 180 calendar days from the date we revoked privileges. This request may include application for a new researcher identification card.

(d) Our reinstatement of research privileges applies to all research rooms.

(e) If we reinstate your research privileges, we issue you a card for a probationary period of 60 days. At the end of the probationary period, you may apply for a new, unrestricted identification card, which we issue to you if your conduct during the probationary period follows the rules of conduct in this part and in part 1280 of this chapter.

[69 FR 39314, June 30, 2004, as amended at 76 FR 6555, Feb. 7, 2011]

### § 1254.52 Can NARA extend the period of revoked research privileges?

(a) If the reinstatement of research privileges would pose a threat to the safety of persons, property, or NARA holdings, or if, in the case of a probationary identification card, you fail to comply with the rules of conduct for NARA facilities, we may extend the revocation of privileges for additional 180-day periods. We send you a written notice of an extension within 3 workdays of our decision to continue the revocation of research privileges.

(b) You have 30 calendar days after the decision to extend the revocation of research privileges to appeal the action in writing. Mail your appeal to the Deputy Archivist at the address given in § 1254.50(a). The Deputy Archivist has 30 calendar days from receipt of your appeal to decide whether to reinstate your research privileges and to respond to you in writing.

[69 FR 39314, June 30, 2004, as amended at 76 FR 6555, Feb. 7, 2011]

## Subpart C—Copying Archival Materials

GENERAL INFORMATION

### § 1254.60 What are NARA's copying services?

(a) You may order copies of many of our documents for a fee. Our fee schedule for copies is located in § 1258.12 of this chapter. Exceptions to the fee schedule are located in § 1258.4. See § 1258.6 about reproductions NARA may provide without charging a fee.

(b) For preservation reasons, we do not make copies from the original documents if the documents are available on microfilm and a clear copy (electrostatic, photographic, or microfilm) can be made from the microfilm.

### § 1254.62 Does NARA have archival materials protected by copyright?

Yes, although many of our holdings are in the public domain as products of employees or agents of the Federal Government, some records and donated historical materials do have copyright protection. Particularly in the case of some special media records, Federal agencies may have obtained materials from private commercial sources, and these may carry publication restrictions in addition to copyright protection. Presidential records may also contain copyrighted materials. You are responsible for obtaining any necessary permission for use, copying, and publication from copyright holders and for any other applicable provisions of the Copyright Act (Title 17, United States Code).

### § 1254.64 Will NARA certify copies?

Yes, the responsible director of a unit, or any of his or her superiors, the Director of the Federal Register, and their designees may certify copies of documents as true copies for a fee. The fee is found at § 1258.12(a).

RULES RELATING TO SELF-SERVICE COPYING

### § 1254.70 How may I make my own copies of documents?

(a) Self-service copiers are available in some of our facilities. Contact the appropriate facility to ask about availability before you visit.

(b) In the Washington, DC, area, self-service card-operated copiers are located in research rooms. Other copiers we set aside for use by reservation are located in designated research areas. Procedures for use are outlined in §§ 1254.80 through 1254.84 of this subpart.

(c) You may use NARA self-service copiers where available after the research room attendant reviews the documents to determine their suitability for copying. The appropriate supervisor or the senior archivist on duty in the research room reviews the determination of suitability if you request.

(d) We may impose time limits on using self-service copiers if others are waiting to use them.

(e) In some of our facilities, you may use your own scanner or personal paper-to-paper copier to copy textual materials if the equipment meets our standards cited in §§ 1254.80 and 1254.86. Contact the appropriate facility for additional details before you visit.

(f) You must follow our document handling instructions in §§ 1254.36 and 1254.72. You also must follow our microfilm handling instructions in § 1254.42.

(g) You may use a hand-held camera with no flash or a cell phone camera to take pictures of documents only if you have the permission of the research room attendant.

(h) You may not use a self-service copier or personal scanner to copy some special media records. If you wish to copy motion pictures, maps and architectural drawings, or aerial photographic film, the appropriate staff can advise you on how to order copies. If you wish to obtain copies of electronic records files, the appropriate staff will assist you.

### § 1254.72 What procedures do I follow to copy documents?

(a) You must use paper tabs to designate individual documents you wish to copy. You must show the container including the tabbed documents to the research room attendant who determines whether they can be copied on the self-service copier. The manager of the staff administering the research room reviews the determination of suitability if you ask. After copying is completed, you must return documents removed from files for copying to their original position in the file container, you must refasten any fasteners removed to facilitate copying, and you must remove any tabs placed on the documents to identify items to be copied.

(b) If you are using a reserved copier, you must submit the containers of documents to the attendant for review before your appointment. The review time required is specified in each research room. Research room attendants may inspect documents after copying.

(c) You may copy from only one box and one folder at a time. After copying the documents, you must show the original documents and the copies to a research room attendant.

### § 1254.74 What documents are unsuitable for copying on a self-service or personal copier or scanner?

(a) Bound archival volumes (except when specialized copiers are provided).

(b) Documents fastened together by staples, clips, acco fasteners, rivets, or similar fasteners, where folding or bending documents may cause damage.

(c) Documents larger than the glass copy plate of the copier.

(d) Documents with uncancelled security classification markings.

(e) Documents with legal restrictions on copying.

(f) Documents that the research room attendant judges to be in poor physical condition or which may be subject to possible damage if copied.

### § 1254.76 What procedures do I follow to copy formerly national security-classified documents?

(a) We must properly cancel security classification markings (Confidential, Secret, Top Secret) and other restricted markings on declassified records before documents are copied. Only a NARA staff member can cancel security markings. Properly declassified documents bear the declassification authority as required by 32 CFR 2001.24.

(b) You may not remove from the research room copies of documents bearing uncancelled classification markings. We confiscate copies of documents with uncancelled markings.

(c) When you copy individual documents, the research room staff cancels the classification markings on each page of the copy and places the declassification authority on the first page of each document. If you copy only selected pages from a document, you must make a copy of the first page bearing the declassification authority and attach that page to any subsequent page(s) you copy from the document. You must show this declassification authority to the guard or research room attendant when you remove copies of documents from the research room or the building.

(d) Before you copy formerly-classified materials, we provide you with a declassification strip, which you attach to the copier. The strip reproduces on each page copied and cancels the security markings. We may also provide a declassification strip to attach to your personal copier or scanner.

(e) Staff at Presidential libraries cancel security markings before documents are provided to researchers in research rooms.

## RULES RELATING TO USING COPYING EQUIPMENT

### § 1254.80 Does NARA allow me to use scanners or other personal copying equipment?

(a) Subject to §§ 1254.26(d) and 1254.86, you may use scanners and other copying equipment if the equipment meets certain conditions or minimum standards described in paragraphs (b) through (g) of this section. Exceptions are noted in paragraph (h). The supervisor administering the research room or the senior staff member on duty in the research room reviews the research room attendant's determination if you request.

(b) Equipment platens or copy boards must be the same size or larger than the records. No part of a record may overhang the platen or copy board.

(c) No part of the equipment may come in contact with records in a manner that causes friction, abrasion, or that otherwise crushes or damages records.

(d) We prohibit drum scanners.

(e) We prohibit automatic feeder devices on flatbed scanners. When using a slide scanner, we must check slides after scanning to ensure that no damage occurs while the slide is inside the scanner.

(f) Light sources must not raise the surface temperature of the record you copy. You must filter light sources that generate ultraviolet light.

(g) All equipment surfaces must be clean and dry before you use records. You may not clean or maintain equipment, such as replacing toner cartridges, when records are present. We do not permit aerosols or ammonia-containing cleaning solutions. We permit a 50 percent water and 50 percent isopropyl alcohol solution for cleaning.

(h) If you wish to use a scanner or other personal copier in a regional archives or Presidential library, contact the facility first for approval. Not all facilities permit the use of scanners or personal copying equipment because of space, electrical load concerns, and other reasons. Your request must state the space and power consumption requirements and the intended period of use.

(i) In facilities that provide a self-service copier or permit the use of personal paper-to-paper copiers or scanners, you must show documents you wish to copy to the research room attendant for approval.

(j) If you have any question about what is permissible at any given facility, consult with the facility before your visit. Contact information for our facilities is found in part 1253 of this chapter and at the NARA Web site, *http://www.archives.gov*.

### § 1254.82 What limitations apply to my use of self-service card-operated copiers?

(a) There is a 5-minute time limit on copiers in research rooms when others are waiting to use the copier. If you use a microfilm reader-printer, we may limit you to three copies when others are waiting to use the machine. If you wish to copy large quantities of documents, you should see a staff member in the research room to reserve a copier for an extended time period.

(b) If we must cancel an appointment due to copier failure, we make every effort to schedule a new mutually agreed-upon time. However, we do not displace researchers whose appointments are not affected by the copier failure.

### § 1254.84 How may I use a debit card for copiers in the Washington, DC, area?

Your research identification card can be used as a debit card if you arrange with the Cashier's Office to set up an account using cash, check, money order, debit card, or credit card. Your researcher identification card number as encoded on the card forms the basis of your account in the debit system. You may also purchase generic debit cards of values up to $20 each from the Cashier's Office using any of the above payment methods. When the Cashier's Office is closed or at any other time during the hours research rooms are open as cited in part 1253 of this chapter, you may use cash or credit card to purchase a debit card from the vending machines located in the research rooms. Inserting the debit card into a card reader connected to the copier enables you to make copies for the appropriate fee, which are found in § 1258.12 of this chapter. You can add value to your card using the vending machine in the research room or at the Cashier's Office. We do not make refunds.

[75 FR 10415, Mar. 8, 2010]

### § 1254.86 May I use a personal paper-to-paper copier at the National Archives at College Park?

(a) At the National Archives at College Park facility NARA approves a limited number of researchers to bring in and use personal paper-to-paper copying equipment in the Textual Research Room (Room 2000). Requests must be made in writing to the chief of the Research Support Branch (NWCC2), National Archives and Records Administration, 8601 Adelphi Rd., College Park, MD 20740–6001. Requests must identify the records you wish to copy, the expected duration of the project, and the make and model of the equipment.

(b) We evaluate requests using the following criteria:

(1) A minimum of 3,000 pages must be copied;

(2) The project is expected to take at least 4 weeks, with the copier in use a minimum of 6 hours per day or 30 hours per week;

(3) The copying equipment must meet our standards for preservation (*see* §§ 1254.26(d) and 1254.80); and

(4) Space is available for the personal copying project. NARA allows no more than 3 personal copying projects in the research room at one time, with Federal agencies given priority over other users.

(c) You must coordinate with research room management and oversee the installation and removal of copying equipment. You are responsible for the cost and supervision of all service calls and repairs. You must remove copying equipment and supplies within two business days after the personal copying project is completed.

(d) NARA is not responsible for any personal equipment or consumable supplies.

(e) You must be trained by NARA staff on the proper methods for handling and copying archival documents.

(f) You must abide by all regulations on copying stated in this subpart.

(g) We reserve the right to discontinue the privilege of using a personal copier at any time without notice. We discontinue your privilege if you violate one of the conditions in this subpart, we need to provide space for a Federal agency, or we lack staff to supervise the area.

(h) The collection of information contained in this section has been approved by the Office of Management

and Budget with the control number 3095–0035.

[69 FR 39314, June 30, 2004, as amended at 69 FR 55505, Sept. 15, 2004]

### § 1254.88 What are the rules for the Motion Picture, Sound, and Video Research Room at the National Archives at College Park?

(a) We provide use of NARA viewing and listening equipment in the research room on a first-come-first-served basis. When others are waiting to use the equipment, we may impose a 3-hour limit on your use.

(b) You may use the NARA-furnished recorder or your personal recording device and media to make a copy of unrestricted archival materials in the research room.

(c) We provide you with a copy of the Motion Picture, Sound, and Video Research Room rules and a warning notice on potential copyright claims in unrestricted titles. You are responsible for obtaining any needed permission or release from a copyright owner for other than personal use of the copy.

(d) The research room attendant may inspect and tag your personal recording equipment before admitting you into the unrestricted viewing and copying area in the research room. You must place all equipment and accessory devices on the carts we provide, except that you may place a tripod holding a video camera on the floor in front of a film-viewing station. We are not responsible for damage to or loss of personal equipment and accessories.

(e) You must remain in the research room at your audio or film viewing station at all times while your personal equipment is in use. You must remove your personal equipment from the research room when you leave the room for the day. We cannot be responsible for any damage to or loss of your equipment.

(f) We are not responsible for assisting with ''hook-up'' to NARA viewing equipment, for providing compatibility between the personal recording equipment and NARA viewing equipment, or for the quality of the copies you make. We provide you information on the types of NARA equipment that we have in the research room and on the cables necessary for hook-up to our viewing equipment.

(g) When you bring audio or video recording tapes or cassettes into the unrestricted area of the research room, the research room attendant marks the recording media ''NARA-approved personal property'' for identification purposes. We inspect this media before you leave the research room and when you leave the research complex at the National Archives at College Park.

(h) You may reserve a NARA-furnished video copying station and 120-minute blank video cassette, for a fee, on a first-come-first-served basis for 90 minutes. If no one else is waiting to use the station, you may reserve an additional 90 minutes. You may not connect personal recording devices to NARA equipment at the video copying station. You may use only NARA-provided tapes at the video copying station. Fees for use of the station and blank cassette are specified in § 1258.12 of this chapter.

(i) You may not take any personal recording device or media in the restricted viewing area in the research room.

## Subpart D—Microfilming Archival Materials

### § 1254.90 What is the scope of this subpart?

(a) This subpart establishes rules and procedures for the use of privately owned microfilm equipment to film accessioned archival records and donated historical materials in NARA's legal and physical custody by:

(1) Foreign, Federal, state, and local government agencies;

(2) Private commercial firms;

(3) Academic research groups; or

(4) Other entities or individuals that request exemption from obtaining copies through the regular fee schedule reproduction ordering system of NARA.

(b) If you wish to microfilm Federal agency records in the physical custody of the Washington National Records Center (WNRC), contact the director, WNRC, about procedures for obtaining permission from the originating agency to film those records (*see* § 1253.4). For

information about procedures for obtaining permission from the originating agency to film records in the records center operation of one of NARA's regional records facilities or in the physical custody of the National Personnel Records Center (NPRC), contact the Regional Administrator of the region in which the records are located (*see* §1253.6), or the director, NPRC, for records in NPRC (*see* §1253.5).

(c) Federal agencies that need to microfilm archival records in support of the agency's mission must contact the appropriate office as specified in §1254.92(a) as soon as possible after the need is identified for information concerning standards and procedures that apply to their microfilming of archival records.

### §1254.92 How do I submit a request to microfilm records and donated historical materials?

(a) You must submit your request to microfilm materials to the appropriate office.

(1) Submit your written request to microfilm archival records or donated historical materials (except donated historical materials under the control of the Office of Presidential Libraries) in the Washington, DC, area to the Assistant Archivist for Records Services—Washington, DC (NW), 8601 Adelphi Rd., College Park, MD 20740–6001.

(2) Submit your written request to microfilm archival records or donated historical materials in a NARA regional archives to the Assistant Archivist for Regional Records Services (NR), 8601 Adelphi Rd., College Park, MD 20740–6001.

(3) Submit your written request to microfilm records or donated historical materials in a Presidential library or donated historical materials in the Washington area under the control of the Office of Presidential Libraries to the Assistant Archivist for Presidential Libraries (NL), 8601 Adelphi Rd., College Park, MD 20740–6001.

(4) OMB control number 3095–0017 has been assigned to the information collection contained in this section.

(b) You must submit your request to use privately owned microfilm equipment four months in advance of the proposed starting date of the microfilming project. If you submit your request with less advance notice, we consider it and may approve it if we have available adequate NARA space and staff and if you can complete all training, records preparation, and other NARA requirements in a shorter time frame.

(1) You may include in your request only one project to microfilm a complete body of documents, such as an entire series, a major continuous segment of a very large series which is reasonably divisible, or a limited number of separate series related by provenance or subject.

(2) We do not accept additional requests from an individual or organization to microfilm records in a NARA facility while we evaluate an earlier request from that individual or organization to microfilm records at that facility.

(3) We establish the number of camera spaces available to a single project based upon the total number of projects approved for filming at that time.

### §1254.94 What must my request include?

(a) A description of the documents you wish to copy that includes the following elements:

(1) Record group number or agency of origin or, for donated historical materials, title of the collection;

(2) Title of series or file segment;

(3) Date span; and

(4) Estimated volume in number of pages or cubic feet.

(b) The estimated amount of time (work-days) that the microfilm copying project will take; the date that you would like to begin the project; and the number of persons who would require training (*see* §1254.108(b)).

(c) The number and a description of the equipment that you will use for copying including:

(1) The name of the manufacturer and model number; and

(2) The type of light source to be employed (fluorescent, tungsten, or electronic flash) and if electronic flash (*i.e.*, strobe) or fluorescent, whether the light source is filtered to omit ultraviolet radiation.

(d) A statement of the procedures that you will follow to ensure that you copy all pages, that the images on the microfilm are legible, and that the microfilm is properly processed. At a minimum, the procedures should meet the requirements specified in part 1230 of this chapter regarding the microfilming of permanent records.

### § 1254.96 What credits must I give NARA?

(a) You must agree to credit NARA as having custody of the original documents. The credit must appear at the beginning of a microfilm publication and in any publicity material or descriptions of the publication.

(b) If the original documents are Federal records, you must agree to include on the film this statement: ''The documents reproduced in this publication are among the records of the (name of agency) in the custody of the National Archives of the United States. (Name of microfilm publication producer) does not claim any copyright interest in these official U.S. Government records.''

(c) If the original documents are donated historical materials, you must agree to include on the film this statement: ''The documents reproduced in this publication are donated historical materials from (name of donor) in the custody of the (name of Presidential library or National Archives of the United States). The National Archives and Records Administration administers them in accordance with the requirements of the donor's deed of gift and the U.S. Copyright Law, Title 17, U.S.C. (Name of microfilm publication producer) does not claim any copyright interest in these donated historical materials.''

(d) If the original documents are Presidential or Vice-Presidential records as specified in 44 U.S.C. 2201, you must agree to include on the film this statement: ''The documents reproduced in this publication are Presidential records in the custody of the (name of Presidential library or National Archives of the United States). The National Archives and Records Administration administers them in accordance with the requirements of Title 44, U.S.C. (Name of microfilm publication producer) does not claim any copyright interest in these official Presidential records.''

(e) If the original documents are records of Congress, you must agree to include on the film this statement: ''The documents reproduced in this publication are among the records of the (House of Representatives/Senate) in the physical custody of the National Archives and Records Administration (NARA). NARA administers them in accordance with the requirements of the (House/Senate). (Name of microfilm publication producer) does not claim any copyright interest in these official congressional records.''

### § 1254.98 May NARA make subsequent use of my publication?

You must give NARA a royalty-free worldwide license, to take effect seven years after you complete filming at the NARA facility, to publish, display, reproduce, distribute, and sell the publication, and to create derivative works based on the publication, and to use the publication in collective works, all without limitation. The license required by this section must be written to take effect upon publication if there is no commercial distributor, or once commercial distribution ends if less than seven years from the date you complete filming at the NARA facility.

### § 1254.100 How does NARA evaluate requests?

(a) NARA evaluates requests by estimating how well completion of a proposed project would further our efforts to preserve and to make available to the public the historically valuable records of the Government.

(b) In considering multiple requests to film at the same time, we give priority to microfilming records that have research value for a variety of studies or that contain basic information for fields of research in which researchers have demonstrated substantial interest.

(c) The records to be filmed should be reasonably complete and not subject to future additions, especially of appreciable volumes, within the original body of records. Records with pending or future end-of-series additions are appropriate for filming.

(d) The records to be filmed should not have substantial numbers of documents withdrawn because of continuing national security classification, privacy, or other restrictions.

(e) We approve only requests to microfilm a complete body of documents, such as an entire series or a major continuous segment of a very large series that is reasonably divisible. Microfilming a complete body of documents means that you must consecutively copy all documents within the file unit(s), from the first to the last page, not skipping any pages in between except for pages that are exact duplicates or blank pages that are not included in a pagination scheme.

(f) We normally approve only requests that include assurances that the project will adhere to the specifications in part 1230 of this chapter concerning microfilm stock standards, index placement, and microfilm processing for permanent records.

(g) We approve only requests that specify that NARA will receive a first generation silver halide duplicate negative containing no splices made from the original camera negative of the microform record created in accordance with part 1230 of this chapter.

(1) We may use this duplicate negative microform to make duplicate preservation and reference copies. The copies may be made available for NARA and public use in NARA facilities and programs immediately upon receipt.

(2) We may also make additional use of the microform, as indicated in § 1254.98, seven years after you complete filming at the NARA facility, or upon delivery of the publication if there is no commercial distributor, or when the commercial distributor is no longer available, whichever occurs first. We may choose to add our own editorial material to the microform copies.

(3) You must deliver detailed roll lists with the microfilm. The lists must give the full range of file titles and a complete list of all file numbers on each roll of microfilm. We prefer that the list be provided in a fielded, electronic format to facilitate its use by staff and researchers. If the electronic format is a data file with defined or delimited fields, you should transfer with the file the records layout identifying the fields, any coded values for fields, and explanations of any delimiters.

(4) Microfilm projects may donate to us additional indexes and finding aids. NARA and the microfilm project execute a deed of gift that specifies restrictions on NARA's use and dissemination of these products under mutually acceptable terms.

### § 1254.102 What requests does NARA not approve?

(a) We do not approve any request that does not include all of the information we require in §§ 1254.94 and 1254.96.

(b) We do not normally approve requests to microfilm documents that:

(1) Have previously been microfilmed and made available to the public;

(2) We have approved for microfilming by another party; or

(3) We plan to film as a NARA microfilm publication or which relate closely to other documents previously microfilmed or approved for microfilming by NARA. We may grant exceptions to this provision at our discretion.

(c) We normally do not approve requests to microfilm documents:

(1) Having restrictions on access that preclude their reproduction;

(2) Known to be protected by copyright;

(3) Having high intrinsic value that only authorized NARA personnel may handle;

(4) In vulnerable physical condition;

(5) Having a high research demand and which we would have to deny to others for an extended period of time during the microfilming process. Where possible, we assist you in developing filming schedules that avoid the need to close documents for a lengthy period of time; and

(6) In formats, such as oversize documents, bound volumes, and others, that would be subject to excessive stress and possible damage from special equipment you plan to use, as well as documents fastened with grommets, heavy duty staples, miscellaneous fasteners, or wafers and other adhesives that cannot be removed without tearing or breaking documents.

(d) We normally do not approve requests from persons or organizations

that failed to produce usable microfilm or to honor commitments they made in previous requests, or for whom we have had to rescind previous permission to microfilm documents because of their conduct.

(e) We do not approve requests to microfilm records in NARA facilities in which there is insufficient space available for private microfilming. We do not permit private microfilming in our records storage (stack) areas.

(1) Federal agencies microfilming records in support of the agency's mission may use the space set aside for private microfilming. Agency microfilming takes priority over private microfilming when there is insufficient space to accommodate both at the same time.

(2) When a NARA facility does not have enough space to accommodate all requests, we may schedule separate projects by limiting the time allowed for each particular project or by requiring projects to alternate their use of the space.

(3) We also do not approve requests where the only space available for filming is in the facility's research room, and such work would disturb researchers. We do not move records from a facility lacking space for private microfilming to another NARA facility for that purpose.

(f) We do not approve requests to microfilm records when there is not enough staff to provide the necessary support services, including document preparation, training of private microfilmers, and monitoring the filming.

(g) We do not approve the start of a project to microfilm records until you have agreed in writing to the amount and schedule of fees for any training, microfilm preparation, and monitoring we must conduct that is necessary to support your project. Our letter of tentative approval for the project includes an agreement detailing the records in the project and the detailed schedule of fees for NARA services for the project. We give final approval when we receive your signed copy of the agreement.

### § 1254.104 How does NARA determine fees to prepare documents for microfilming?

(a) As part of our evaluation of a request to microfilm documents, we determine the amount of microfilm preparation that we must do before you can microfilm the documents and the estimated cost of such preparation. We base fees for microfilm preparation on direct salary costs (including benefits) and supply costs when we perform the work. When a NARA contractor performs the work, the fees are the cost to NARA. Microfilm preparation includes:

(1) Removing document fasteners from documents when the fasteners can be removed without damage to the documents; and

(2) Taking any document conservation actions that must be accomplished in order to film the documents, such as document flattening or mending.

(b) We provide you detailed information on the fees for microfilm preparation in the letter of approval. You must pay fees in accordance with § 1258.14 of this chapter. When a body of documents requires extensive microfilm preparation, we may establish a different payment schedule at our discretion.

### § 1254.106 What are NARA's equipment standards?

(a) Because we have limited space in many NARA facilities, microfilm/fiche equipment should be operable from a table top unless we have given written permission to use free standing/floor model cameras. You may only use planetary type camera equipment. You may not use automatic rotary cameras and other equipment with automatic feed devices. We may approve your use of book cradles or other specialized equipment designed for use with bound volumes, oversized documents, or other formats, as well as other camera types not specified here, on a case-by-case basis.

(b) The power consumption of the equipment normally must not exceed 1.2 kilowatts. Power normally available is 115 volts, 60 hz. You must make requests for electricity exceeding that normally available at least 90 days in advance.

(c) You may not use equipment having clamps or other devices to exert pressure upon or to attach the document to any surface in a way that might damage the document.

(d) The equipment must not use a heat generating light source in close enough proximity to the documents to result in their physical distortion or degradation. All sources of ultraviolet light must be filtered.

**§ 1254.108 What are NARA's requirements for the microfilming process?**

(a) Your equipment must conform to the equipment standards in § 1254.106.

(b) You must handle documents according to the training and instructions provided by our staff so that documents are not damaged during copying and so that their original order is maintained. Only persons who have attended NARA training will be permitted to handle the documents or supervise microfilming operations. We charge you fees for training services and these fees will be based on direct salary costs (including benefits) and any related supply costs. We specify these fees in the written agreement we require for project approval in § 1254.102(h).

(c) You may microfilm documents from only one file unit at a time. After you complete microfilming, you must return documents you removed from files for microfilming to their original position in the file container, refasten any fasteners you removed to facilitate copying, and remove any tabs you placed on the documents to identify items to copy. We will provide fasteners for replacement as necessary.

(d) You may not leave documents unattended on the copying equipment or elsewhere.

(e) Under normal microfilming conditions, actual copying time per sheet must not exceed 30 seconds.

(f) You must turn off any lights used with the camera when the camera is not in actual operation.

(g) You may operate microfilm equipment only in the presence of the research room attendant or a designated NARA employee. If NARA places microfilm projects in a common research area with other researchers, the project will not be required to pay for monitoring that is ordinarily provided. If the microfilm project is performed in a research room set aside for copying and filming, we charge the project fees for these monitoring services and these fees will be based on direct salary costs (including benefits). When more than one project share the same space, monitoring costs will be divided equally among the projects. We specify the monitoring service fees in the written agreement required for project approval in § 1254.102(h).

(h) The equipment normally should be in use each working day that it is in a NARA facility. The director of the NARA facility (as defined in § 1252.2 of this chapter) decides when you must remove equipment because of lack of regular use. You must promptly remove equipment upon request of the facility director.

(i) We assume no responsibility for loss or damage to microfilm equipment or supplies you leave unattended.

(j) We inspect the microform output at scheduled intervals during the project to verify that the processed film meets the microfilm preparation and filming standards required by part 1230 of this chapter. To enable us to properly inspect the film, we must receive the film within 5 days after it has been processed. You must provide NARA with a silver halide duplicate negative of the filmed records (*see* § 1254.100(g)) according to the schedule shown in paragraph (k). If the processed film does not meet the standards, we may require that you refilm the records.

(k) When you film 10,000 or fewer images, you must provide NARA with a silver halide duplicate negative upon completion of the project. When the project involves more than 10,000 images, you must provide a silver halide duplicate negative of the first completed roll or segment of the project reproducing this image count to NARA for evaluation. You also must provide subsequent completed segments of the project, in quantities approximating 100,000 or fewer images, to NARA within 30 days after filming unless we approve other arrangements.

(l) If the microfilming process is causing visible damage to the documents, such as flaking, ripping, separation, fading, or other damage, filming must stop immediately and until the problems can be addressed.

### § 1254.110 Does NARA ever rescind permission to microfilm?

We may, at any time, rescind permission to microfilm records if:

(a) You fail to comply with the microfilming procedures in § 1254.108;

(b) Inspection of the processed microfilm reveals persistent problems with the quality of the filming or processing;

(c) You fail to proceed with the microfilming or project as indicated in the request, or

(d) The microfilming project has an unanticipated adverse effect on the condition of the documents or the space set aside in the NARA facility for microfilming.

(e) You fail to pay NARA fees in the agreed to amount or on the agreed to payment schedule.

# PART 1256—ACCESS TO RECORDS AND DONATED HISTORICAL MATERIALS

## Subpart A—General Information

Sec.
1256.1 What does this part cover?
1256.2 How do I obtain access to records stored in Federal Records Centers?
1256.6 How do I obtain access to records of defunct agencies?
1256.8 How do I obtain access to Presidential records?
1256.10 How do I obtain access to Nixon Presidential materials?

## Subpart B—Access to Federal Archival Records

1256.20 May I obtain access to Federal archival records?
1256.22 How do I request access to restricted information in Federal archival records?
1256.24 How long may access to some records be denied?
1256.26 When can I appeal decisions about access to Federal archival records?
1256.28 Does NARA make any exceptions for access to records containing privacy-restricted information?

## Subpart C—Access to Donated Historical Materials

1256.30 How do I obtain access to donated historical materials?
1256.32 How do I request access to restricted information in donated historical materials?
1256.34 How long may access to some donated historical materials be denied?
1256.36 When can I appeal decisions about access to donated historical materials?

## Subpart D—General Restrictions

1256.40 What are general restrictions?
1256.42 Who imposes general restrictions?
1256.44 Does NARA ever waive general restrictions?
1256.46 National security-classified information.
1256.48 Information about internal agency rules and practices.
1256.50 Information exempted from disclosure by statute.
1256.52 Trade secrets and commercial or financial information.
1256.54 Inter- and intra-agency memoranda (subject to privilege).
1256.56 Information that would invade the privacy of a living individual.
1256.58 Information related to law enforcement investigations.
1256.60 Information relating to financial institutions.
1256.62 Geological and geophysical information relating to wells.

## Subpart E—Access to Materials Containing National Security-Classified Information

1256.70 What controls access to national security-classified information?
1256.72 What are FOIA requests and mandatory review requests?
1256.74 How does NARA process Freedom of Information Act (FOIA) requests for classified information?
1256.76 How do I request mandatory review of classified information under Executive Order 12958, as amended?
1256.78 How does NARA handle my mandatory review request?
1256.80 How does NARA provide classified access to historical researchers and former Presidential appointees?

## Subpart F—Domestic Distribution of United States Information Agency Audiovisual Materials in the National Archives of the United States

1256.90 What does this subpart cover?
1256.92 What is the purpose of this subpart?
1256.94 Definition.

1256.96 What provisions apply to the transfer of USIA audiovisual records to the National Archives of the United States?
1256.98 Can I get access to and obtain copies of USIA audiovisual records transferred to the National Archives of the United States?
1256.100 What is the copying policy for USIA audiovisual records that either have copyright protection or contain copyrighted material?
1256.102 What fees does NARA charge?

AUTHORITY: 44 U.S.C. 2101–2118; 22 U.S.C. 1461(b); 5 U.S.C. 552; E.O. 12958 (60 FR 19825, 3 CFR, 1995 Comp., p. 333; E.O. 13292, 68 FR 15315, 3 CFR, 2003 Comp., p. 196; E.O. 13233, 66 FR 56023, 3 CFR, 2001 Comp., p. 815.

SOURCE: 69 FR 39325, June 30, 2004, unless otherwise noted.

## Subpart A—General Information

### § 1256.1 What does this part cover?

This part describes NARA's policies on access to archival records of the Executive Branch and donated historical materials in the National Archives of the United States and to records in the physical custody of the Federal records centers. This part applies to records and materials covered by the Federal Records Act (44 U.S.C. 2108 and chs. 29, 31, 33) and donated historical materials. This part does not apply to Presidential, Supreme Court, Senate, House of Representatives, and Architect of the Capitol records except for the purpose of directing mandatory review requests in subpart E.

### § 1256.2 How do I obtain access to records stored in Federal Records Centers?

Agencies that retire their records to a Federal records center (FRC) set rules for access to those records. Address requests for access to records stored in Federal records centers directly to the appropriate agency or to the appropriate FRC director at the address shown in part 1253. When the agency's rules permit, NARA makes FRC records available to requesters. When the agency's rules and restrictions do not permit access FRCs receive requests that should have been sent to the agency, the FRC director refers the requests and any appeals for access, including those made under the Freedom of Information Act (5 U.S.C. 552, as amended), to the responsible agency.

### § 1256.6 How do I obtain access to records of defunct agencies?

NARA handles access to archives and FRC records received from agencies that have ceased to exist without a successor in function as described in Subpart B.

### § 1256.8 How do I obtain access to Presidential records?

See 36 CFR part 1270, Presidential Records, for the rules for access to Presidential records transferred to NARA.

### § 1256.10 How do I obtain access to Nixon Presidential materials?

See 36 CFR part 1275, Preservation and Protection of and Access to the Presidential Historical Materials of the Nixon Administration, for the rules for access to Nixon Presidential materials.

## Subpart B—Access to Federal Archival Records

### § 1256.20 May I obtain access to Federal archival records?

(a) Most Federal archival records are open for research without submitting a Freedom of Information Act (FOIA) request. Part 1254 specifies procedures for using unrestricted records in a NARA research room, submitting reference requests, and ordering copies of records.

(b) Some records are subject to restrictions prescribed by statute, Executive Order, or by restrictions specified in writing in accordance with 44 U.S.C. 2108 by the agency that transferred the records to the National Archives of the United States. All agency-specified restrictions must comply with the FOIA. Even if the records are not national-security classified, we must screen some records for other information exempt from release under the FOIA.

### § 1256.22 How do I request access to restricted information in Federal archival records?

(a) You may file a FOIA request. To request access under the provisions of the FOIA, see part 1250 of this chapter,

Public Availability and Use of Federal Records.

(b) For classified information in Federal records, you may file a FOIA request or a mandatory review request under Executive Order 12958, as amended, as described in § 1256.74.

### § 1256.24 How long may access to some records be denied?

(a) Although many records are open for research, some records are closed for long periods, either under our general restrictions, described in subpart D of this part, or another governing authority. For example, in accordance with 44 U.S.C. 2108(b), we do not grant access to restricted census and survey records of the Bureau of the Census less than 72 years old containing data identifying individuals enumerated in population censuses.

(b) Screening records takes time. We screen records as soon as possible and can often make most of the records in which you are interested available. In the case of electronic structured databases, NARA can make a copy of records with restricted information masked. In response to FOIA requests for records in other media, we make a copy of the record available if we can mask or ''redact'' restricted information.

### § 1256.26 When can I appeal decisions about access to Federal archival records?

(a) For information on filing appeals for requests made under the FOIA, see 36 CFR part 1250, subpart D, Appeals.

(b) For information on filing appeals for requests made under mandatory review, see § 1260.54 of this chapter.

### § 1256.28 Does NARA make any exceptions for access to records containing privacy-restricted information?

(a) *NARA policy*. Access to archival records containing information access to which would invade the privacy of an individual is restricted by § 1256.56.

(1) NARA may authorize access to such records for the purpose of research to qualified persons doing biomedical or social science research under the conditions outlined in this section as long as the records do not also contain information restricted by statute or national security-classified information.

(2) If NARA is able to make a copy of such records with all personal identifiers masked or deleted, NARA will make such a ''sanitized'' copy of the record available to all researchers in accordance with § 1256.24.

(3) NARA will not grant access to restricted census and survey records of the Bureau of the Census less than 72 years old containing data identifying individuals enumerated in population censuses in accordance with 44 U.S.C. 2108(b).

(b) *Request for access*. Researchers who wish to have access to records restricted by § 1256.56 to conduct biomedical or social science research must submit a written request to the NARA FOIA/Privacy Act Officer (NGC), National Archives and Records Administration, 8601 Adelphi Road, College Park, MD 20740–6001. OMB control number 3095–0002 has been assigned to this collection of information requirement. Researchers are encouraged to consult informally with NARA before submitting the formal request. The request must include the following information:

(1) Name and mailing address;

(2) Institutional affiliation and position, if applicable;

(3) List of published research, if applicable;

(4) References from two persons who have first-hand knowledge of the requester's qualifications to perform the research;

(5) A statement of the nature of the research to be conducted and any plans for publication or presentation of the research findings;

(6) A listing of all sources of grant funds supporting the research project or its publication;

(7) A statement of the methodology to be used;

(8) A statement of the administrative, technical, and physical safeguards to be employed by the researcher to prevent unauthorized use or disclosure of the records;

(9) A listing of the record groups and series titles to be used; and

(10) A statement that the researcher will abide by the conditions of access to be prescribed by NARA and that the

researcher will assume responsibility for the action of all persons working with the researcher on the project.

(c) *Access Review Committee.* Requests made under paragraph (b) of this section will be reviewed by NARA's Access Review Committee, which is composed of the Deputy Archivist of the United States, the Assistant Archivist for the Office of Records Services—Washington, DC, the Assistant Archivist for the Official of Regional Records Services, and the director(s) of the NARA division(s) that has custody of the requested records. The Committee may consult other persons within and outside the Federal Government who are knowledgeable in the research field for assistance in evaluating a request.

(1) The Committee will examine the request to determine whether:

(i) The requested information is of such a highly sensitive personal nature that disclosure must not be permitted even for biomedical or social science research;

(ii) The methodology proposed by the requester will permit the researcher to obtain the projected research results without revealing personally identifying information;

(iii) The research results are intended to be published or presented at an academic or research conference;

(iv) The requester is a biomedical or social science researcher who has previous research experience and has submitted or intends to submit articles or books on such research for publication;

(v) The safeguards proposed by the requester will adequately protect the personal information; and

(vi) NARA has sufficient staff and space available to safeguard privacy interests necessary to accommodate the research project.

(2) The decision of the Committee will be made in writing to the requester within 15 workdays after receipt of a completed request. At the discretion of the Committee, the researcher may meet with the Committee to discuss the project or to discuss revising the research proposal to meet possible objections of the Committee.

(d) *Conditions of access.* Researchers who are granted access to restricted records, all others associated with the research project who will have access to personally identifiable information from the records, and the manager of any facility handling the records containing personal identifiers must agree in writing to maintain the confidentiality of the information and to adhere to the conditions of access imposed by NARA. NARA will impose the following conditions of access on any project; additional conditions may be imposed on the use of specific records or on specific projects:

(1) The records may be used only for the purpose of the research and for the reporting of research findings as described in the approved research project. The records may not be used for any other purpose;

(2) The records and any authorized copies of records may not be transferred to any person or institution not directly involved with the approved research project and subject to a written agreement to maintain confidentiality specified in § 1256.28(d);

(3) Reasonable administrative, technical, and physical safeguards, as approved by NARA, to prevent unauthorized use or disclosure of the records must be established by the researcher and followed by all persons associated with the project;

(4) When required by NARA, the records must be consulted at the NARA facility where the records are located;

(5) The researcher's notes must not contain any individually identifiable information. The researcher must use an alternate code system to render personally identifiable information as anonymous in all research notes;

(6) Persons who are identified in the records may not be contacted by or on behalf of the researcher;

(7) Before publication or public presentation of the data, the final research product(s) must be provided to the Deputy Archivist of the United States for review. NARA's review is limited to ensuring that there is no possible identification of individuals in the research findings. NARA will not evaluate the validity of the research findings.

(e) *Noncompliance with conditions of access.* If we discover that a researcher has violated any of the conditions of access, we will take steps to revoke the

NARA research privileges of that person and will consult with NARA's General Counsel or his or her designee to determine any other steps to be taken to prevent any further disclosure of the personal information concerned. NARA may also inform the following persons and organizations of the researcher's failure to follow the conditions of use:

(1) The institution with which the researcher is affiliated, if applicable;

(2) Persons who served as references in the application for access;

(3) Organizations that provided grant funds for the project;

(4) The sponsor of the publication or public presentation; and

(5) Appropriate professional organizations.

## Subpart C—Access to Donated Historical Materials

### § 1256.30 How do I obtain access to donated historical materials?

NARA encourages researchers to confer about donated historical materials with the appropriate director or reference staff member at the facilities listed in part 1253 of this chapter. Some donated historical materials have restrictions on their use and availability as stated in writing by the donors in the Donor's Deed of Gift. Some may have other restrictions imposed by statute or Executive Order. If warranted, the Archivist may apply general restrictions to donated materials even when not specified in the donor's deed of gift. NARA staff can assist you with questions about restrictions or copyright protection that may apply to donated materials. See § 1256.36 for information on appealing closure of donated materials and subpart D of this part for information about general restrictions.

### § 1256.32 How do I request access to restricted information in donated historical materials?

(a) At Presidential libraries and regional archives, you may write to the appropriate director at the facilities in part 1253 of this chapter. In the Washington, DC, area, you may write to the Director of Access Programs (NWC) for donated textual materials or the Director of Modern Records Programs (NWM) for donated electronic records. The mailing address for NWC and NWM is Office of Records Services—Washington, DC, 8601 Adelphi Road, College Park, MD 20740–6001.

(b) You may request a review of documents restricted under terms of a donor's deed of gift or other legal instrument to determine whether the conditions originally requiring the closure still exist. Your request must describe each document requested so that the staff can locate it with a reasonable amount of effort. For files that NARA previously screened, you may cite the reference to the withheld document as it appears on the withdrawal sheet.

(c) In many instances, the director or his or her designated representative will determine whether entire documents or portions of them can be opened. However, a donor or his or her representative reserves the right to determine whether the donor's materials, a series, or a document or portions of it should remain closed (*see* § 1256.36).

(d) For classified information in donated historical materials, you may file a mandatory review request under Executive Order 12958, as amended, as described in § 1256.74.

### § 1256.34 How long may access to some donated historical materials be denied?

Some donated historical materials are closed for long periods, either under the provisions of the deed of gift, our general restrictions described in subpart D of this part, or another governing authority. We are sometimes able to make a copy of materials with restricted information redacted.

### § 1256.36 When can I appeal decisions about access to donated historical materials?

(a) If you wish to appeal a denial of access from the director or his designated representative in implementing the provisions of a donor's deed of gift, you may write a letter addressed to the Deputy Archivist of the United States, National Archives and Records Administration, 8601 Adelphi Road, College Park, MD 20740–6001. The Deputy Archivist, the Assistant Archivist for Presidential Libraries, and the

Assistant Archivist for Records Services—Washington, DC, or their designated representatives, compose the Board of Review for appeals relating to donated historical materials.

(b) The board's decision is final. If the board cannot make a determination on your request within 30 working days of receipt, NARA informs you of the reason for the delay. If the board determines that a document should remain closed, you may not file a new appeal for two years. Similarly, you may not file an appeal on documents in collections that have been open for research for less than 2 years.

(c) In some cases, the donor or his representative may reserve the right to determine whether the donor's materials, a series, or a document or portions of it should remain closed; you cannot appeal such decisions.

(d) For information on filing appeals for requests made under mandatory review of White House originated information, see § 1260.62 of this chapter.

## Subpart D—General Restrictions

### § 1256.40 What are general restrictions?

General restrictions apply to certain kinds of information or classes of records, regardless of the record group to which the records have been allocated. These general restrictions may apply to records and materials not covered by the Freedom of Information Act. The general restrictions are listed and explained in §§ 1256.46 through 1256.62.

### § 1256.42 Who imposes general restrictions?

The Archivist of the United States imposes all general restrictions in accordance with 5 U.S.C. 552, as amended, and 44 U.S.C. 2107(4), 2108, and 2111.

### § 1256.44 Does NARA ever waive general restrictions?

NARA may provide access to records withheld under a general restriction only to:

(a) NARA employees for work purposes;

(b) The creating agency or its authorized agent in the conduct of agency business;

(c) The donor, in the case of donated historical materials; or

(d) The subject of the records in some cases or the subject's authorized agent.

### § 1256.46 National security-classified information.

In accordance with 5 U.S.C. 552(b)(1), NARA cannot disclose records containing information regarding national defense or foreign policy that is properly classified under the provisions of the pertinent Executive Order on Classified National Security Information and its implementing directive (Executive Order 12958, as amended).

### § 1256.48 Information about internal agency rules and practices.

(a) NARA may withhold from disclosure, in accordance with 5 U.S.C. 552(b)(2), the following:

(1) Records that contain information on substantial internal matters of agencies that, if disclosed, could risk circumvention of a legal requirement, such as a statute or an agency regulation.

(2) Records containing information that states or assesses an agency's vulnerability to outside interference or harm. NARA withholds records that identify agency programs, systems, or facilities deemed most sensitive. NARA also withholds records describing specific measures that can be used to counteract such agency vulnerabilities.

(b) The Archivist of the United States may determine that this general restriction does not apply to specific records because enough time has passed that agency statutes or regulations would not be compromised and programs, systems, and facilities would not be harmed.

### § 1256.50 Information exempted from disclosure by statute.

In accordance with 5 U.S.C. 552(b)(3), NARA withholds records containing information that is specifically exempted from disclosure by statute when that statute:

(a) Requires withholding information from the public, leaving no discretion; or

(b) Establishes particular criteria for withholding or refers to particular types of matters to be withheld.

**§ 1256.52 Trade secrets and commercial or financial information.**

In accordance with 5 U.S.C. 552(b)(4), NARA may withhold records that contain trade secrets and commercial or financial information, obtained from a person, that is privileged or confidential. Such records may be disclosed only if:

(a) The person who provided the information agrees to its release; or

(b) In the judgment of the Archivist of the United States, enough time has passed that release of the information would not result in substantial competitive harm to the submitter of the information. See 36 CFR 1250.82 for additional regulatory guidance.

**§ 1256.54 Inter- and intra-agency memoranda (subject to privilege).**

(a) In accordance with 5 U.S.C. 552(b)(5), NARA may withhold information found in inter-agency or intra-agency records if that information is subject to a legally recognized privilege, including the:

(1) Deliberative process privilege;

(2) Attorney work product privilege; and

(3) Attorney-client privilege.

(b) The Archivist of the United States may determine that this general restriction does not apply to specific records because enough time has passed that release of the information would not result in the harm that the privilege was intended to protect or confidential attorney-client communications.

**§ 1256.56 Information that would invade the privacy of a living individual.**

(a) In accordance with 5 U.S.C. 552(b)(6), NARA will withhold records in personnel and medical and similar files containing information about a living individual that reveals details of a highly personal nature that, if released, would cause a clearly unwarranted invasion of personal privacy. Privacy information may include, but is not limited to, information about the physical or mental health or the medical or psychiatric care or treatment of the individual, and that:

(1) Contains personal information not known to have been previously made public, and

(2) Relates to events less than 75 years old.

(b) The Archivist of the United States may determine that this general restriction does not apply to:

(1) Specific records because enough time has passed that the privacy of living individuals is not compromised; or

(2) Researchers for the purpose of biomedical and social science research when such researchers have provided NARA with adequate written assurance that the record(s) will be used solely as a research or reporting record and that no individually identifiable information will be disclosed.

**§ 1256.58 Information related to law enforcement investigations.**

(a) In accordance with 5 U.S.C. 552(b)(7), NARA will withhold records compiled for law enforcement purposes. Unless otherwise determined by the Archivist in accordance with paragraph (b) of this section, records compiled for law enforcement purposes may be disclosed only if all of the following conditions are met:

(1) The release of the information does not interfere with law enforcement proceedings;

(2) The release of the information would not deprive a person of a right to a fair trial or an impartial adjudication;

(3) The release of the information would not constitute an unwarranted invasion of personal privacy;

(4) Confidential sources and information provided by a confidential source are not revealed;

(5) Confidential investigation techniques are not described; and

(6) Release of the information would not endanger the life or physical safety of any person.

(b) The Archivist of the United States may determine that this general restriction does not apply to specific records because enough time has passed that:

(1) The safety of persons is not endangered, and

(2) The public interest in disclosure outweighs the continued need for confidentiality.

### § 1256.60 Information relating to financial institutions.

(a) In accordance with 5 U.S.C. 552(b)(8), NARA may withhold information in records contained in or relating to the examination, operating, or condition reports prepared by, on behalf of, or for the use of an agency responsible for the regulation or supervision of financial institutions.

(b) The Archivist of the United States may determine that this general restriction does not apply to specific records because enough time has passed that current financial information is not compromised.

### § 1256.62 Geological and geophysical information relating to wells.

(a) In accordance with 5 U.S.C. 552(b)(9), NARA may withhold information in records that relates to geological and geophysical information and data, including maps, concerning wells.

(b) The Archivist of the United States may determine that this general restriction does not apply to specific records because enough time has passed that current proprietary rights are not compromised.

## Subpart E—Access to Materials Containing National Security-Classified Information

### § 1256.70 What controls access to national security-classified information?

(a) The declassification of and public access to national security-classified information, hereinafter referred to as ''classified information'' is governed by Executive Order 12958 of April 17, 1995 (3 CFR, 1995 Comp., p. 333) and as amended by Executive Order 13292 of March 25, 2003 (68 FR 15315, 3 CFR, 2003 Comp. 196), 32 CFR part 2001, and the Freedom of Information Act (5 U.S.C. 552, as amended).

(b) Public access to documents declassified in accordance with this regulation may be restricted or denied for other reasons under the provisions of 5 U.S.C. 552(b) for accessioned agency records; §§ 1256.30 through 1256.36 of this part for donated historical materials; 44 U.S.C. 2111, 44 U.S.C. 2201 *et seq.*, and 36 CFR part 1270 for Presidential records; and 44 U.S.C. 2111 note and 36 CFR part 1275 for Nixon Presidential materials.

### § 1256.72 What are FOIA requests and mandatory review requests?

(a) You may file a FOIA request for Executive Branch agency records, regardless of whether they contain classified information. The FOIA also applies to Presidential records as cited in § 1256.74(b). The FOIA does not apply to records of the Judicial and Legislative Branches or to donated historical materials.

(b) You may only file a mandatory review request if the records contain classified information. NARA handles mandatory review requests for records we hold for the Executive, Judicial, and Legislative Branches as well as donated historical materials under E.O. 12958, as amended, section 3.5.

### § 1256.74 How does NARA process Freedom of Information Act (FOIA) requests for classified information?

(a) NARA processes FOIA requests for access to classified information in Federal records in accordance with the provisions of 36 CFR part 1250. Time limits for responses to FOIA requests for classified information are those provided in the FOIA, rather than the longer time limits provided for responses to mandatory review requests specified by Executive Order 12958, Classified National Security Information (3 CFR, 1995 Comp., p. 333), as amended by Executive Order 13292 (68 FR 15315, 3 CFR, 2003 Comp., p. 196).

(b) NARA processes requests for access to classified information in Presidential records under the FOIA and the Presidential Records Act (PRA) in accordance with the provisions of part 1270 of this chapter. Time limits for responses to FOIA requests for classified information are those provided in the FOIA, the PRA, and Executive Order 13233, Further Implementation of the Presidential Records Act (3 CFR, 2001 Comp., p. 815).

### § 1256.76 How do I request mandatory review of classified information under Executive Order 12958, as amended?

(a) You may request mandatory review of classified information that is in the legal custody of NARA, as well as

in legislative and judicial records NARA holds. Your mandatory review request must describe the document or material containing the information with sufficient specificity to enable NARA to locate it with a reasonable amount of effort. When possible, a request must include the name of the originator and recipient of the information, as well as its date, subject, and file designation. Information we reviewed within the previous 2 years is not subject to mandatory review. We notify you if this provision applies to your request.

(b) You must address your mandatory review request to the appropriate staff in the following table.

| If the documents are . . . | . . . then address your request to |
|---|---|
| (1) Presidential records and donated historical materials at a Presidential library. | The appropriate library cited in 36 CFR part 1253. |
| (2) Nixon Presidential materials. | Director, Nixon Presidential Materials Staff (NLNS), 8601 Adelphi Road, College Park, MD 20740–6001. |
| (3) Presidential materials maintained in the Washington, DC, area. | Director, Presidential Materials Staff (NLMS), 700 Pennsylvania Avenue, NW., Washington, DC 20408. |
| (4) Federal records, donated historical materials related to Federal records, judicial records, legislative records maintained in the Washington, DC, area. | Chief, Special Access/FOIA Staff (NWCTF), 8601 Adelphi Road, College Park, MD 20740–6001. |
| (5) Federal records and judicial records maintained at a regional archives. | The appropriate regional archives cited in 36 CFR part 1253. |

### § 1256.78 How does NARA handle my mandatory review request?

(a) You may find our procedures for mandatory review and appeals of denials in part 1260 of this chapter, Declassification of National Security Information.

(1) When agencies provide declassification guidance and delegate declassification authority to the Archivist of the United States, NARA reviews for declassification and releases the requested information or those declassified portions of the request that constitute a coherent segment unless withholding is otherwise warranted under applicable law.

(2) When we do not have guidance from agencies, we coordinate the declassification review with the original classifying agency or agencies under the provisions of part 1260, subchapter D of this chapter.

(b) If we cannot identify the information you seek from the description you provide or if the volume of information you seek is so large that processing it would interfere with our capacity to serve all requesters on an equitable basis, we notify you that, unless you provide additional information or narrow the scope of your request, we cannot take further action.

### § 1256.80 How does NARA provide classified access to historical researchers and former Presidential appointees?

(a) In accordance with the requirements of section 4.4 of E.O. 12958, as amended, we may grant access to classified information to certain eligible persons. These persons are engaged in historical research projects or previously occupied policy-making positions to which they were appointed by the President. If you seek permission to examine materials under this special historical researcher/Presidential appointees access program, you must contact NARA in advance. We need at least 4 months before you wish to have access to the materials to permit time for the responsible agencies to process your request for access. If you seek access to classified Presidential records under section 4.4 of E.O. 12958, you must first qualify under special access provisions of 44 U.S.C. 2205. NARA informs you of the agencies to which you have to apply for permission to examine classified information, including classified information originated by the White House or classified information in the custody of the National Archives which was originated by a defunct agency.

(b) You may examine records under this program only after the originating or responsible agency:

(1) Determines in writing that access is consistent with the interest of national security; and

(2) Takes appropriate steps to protect classified information from unauthorized disclosure or compromise, and ensures that the information is safeguarded in a manner consistent with Executive Order 12958, as amended.

(c) The originating or responsible agency limits the access granted to former Presidential and Vice Presidential appointees to items that the person originated, reviewed, signed, or received while serving as an appointee.

(d) To protect against the possibility of unauthorized access to restricted documents, a director may issue instructions supplementing the research room rules provided in 36 CFR part 1254.

## Subpart F—Domestic Distribution of United States Information Agency Audiovisual Materials in the National Archives of the United States

### § 1256.90 What does this subpart cover?

This subpart contains procedures governing the public availability of audiovisual records and other materials subject to 22 U.S.C. 1461(b) that have been transferred to the National Archives of the United States by the United States Information Agency (USIA).

### § 1256.92 What is the purpose of this subpart?

This subpart implements section 501 of the United States Information and Educational Exchange Act of 1948 (22 U.S.C. 1461), as amended by section 202 of Public Law 101–246 (104 Stat. 49, Feb. 16, 1990). This subpart also outlines procedures that permit the public to inspect and obtain copies of USIA audiovisual records and other materials in the United States that were prepared for dissemination abroad and that have been transferred to NARA for preservation and domestic distribution.

### § 1256.94 Definition.

For the purposes of this subpart, ''Audiovisual records'' mean motion picture films, videotapes, and sound recordings, and other materials regardless of physical form or characteristics that were prepared for dissemination abroad.

### § 1256.96 What provisions apply to the transfer of USIA audiovisual records to the National Archives of the United States?

The provisions of 44 U.S.C. 2107 and 36 CFR part 1228 apply to the transfer of USIA audiovisual records to NARA, and to their deposit with the National Archives of the United States. At the time the audiovisual records are transferred to NARA, the Director of USIA, in accordance with § 1228.266(e) of this chapter, will also transfer any production or title files bearing on the ownership of rights in the productions in connection with USIA's official overseas programming.

### § 1256.98 Can I get access to and obtain copies of USIA audiovisual records transferred to the National Archives of the United States?

NARA provides access to USIA audiovisual records after the appropriate time period of restriction has passed.

(a) No USIA audiovisual records in the National Archives of the United States that were prepared for dissemination abroad are available for copying until at least 12 years after USIA first disseminated these materials abroad, or, in the case of materials prepared for foreign dissemination but not disseminated abroad, until at least 12 years after the preparation of the materials.

(b) If the appropriate time has passed, you may have access to USIA audiovisual records that do not have copyright protection and do not contain copyright material. USIA audiovisual records prepared for dissemination abroad that NARA determines do not have copyright protection nor contain copyrighted material are available for examination and copying as described in the regulations in parts 1252, 1253, 1254, 1256, and 1258 of this chapter. To determine whether materials have copyright protection or contain copyrighted material, NARA relies on information contained within or fastened to individual records (for example, copyright notices); information contained within relevant USIA production, title, or other files that USIA transferred to NARA; information provided by requesters under § 1256.100(b) (for example, evidence from the Copyright Office that copyright has lapsed or expired);

and information provided by copyright or license holders.

### § 1256.100 What is the copying policy for USIA audiovisual records that either have copyright protection or contain copyrighted material?

If the appropriate time has passed, as stated in § 1256.98(a), USIA audiovisual records that either have copyright protection or contain copyrighted material may be copied as follows:

(a) USIA audiovisual records prepared for dissemination abroad that NARA determines may have copyright protection or may contain copyrighted material are made available for examination in NARA research facilities as described in the regulations in this title.

(b) Copies of USIA audiovisual records prepared for dissemination abroad that NARA determines may have copyright protection or may contain copyrighted material are provided to you if you seek the release of such materials in the United States once NARA has:

(1) Ensured, as described in paragraph (c) of this section, that you have secured and paid for necessary United States rights and licenses;

(2) Been provided with evidence from the Copyright Office demonstrating that copyright protection in the materials sought, or relevant portions in the materials, has lapsed or expired; or

(3) Received your signed certification in accordance with paragraph (d) of this section that you will use the materials sought only for purposes permitted by the Copyright Act of 1976, as amended, including the fair use provisions of 17 U.S.C. 107. No copies of USIA audiovisual records will be provided until the fees authorized under part 1258 of this chapter have been paid.

(c) If NARA determines that a USIA audiovisual record prepared for dissemination abroad may have copyright protection or may contain copyrighted material, you may obtain copies of the material by submitting to NARA written evidence from all copyright and license owner(s) that any necessary fees have been paid or waived and any necessary licenses have been secured.

(d) If NARA has determined that a USIA audiovisual record prepared for dissemination abroad may have copyright protection or may contain copyrighted material, persons seeking the release of such material in the United States may obtain copies of the material by submitting to NARA the following certification statement:

> I, (printed name of individual), certify that my use of the copyrighted portions of the (name or title and NARA identifier of work involved) provided to me by the National Archives and Records Administration (NARA), will be limited to private study, scholarship, or research purposes, or for other purposes permitted by the Copyright Act of 1976, as amended. I understand that I am solely responsible for the subsequent use of the copyrighted portions of the work identified above.

(e) In every instance where NARA provides a copy of an audiovisual record under this subpart, and NARA has determined that the work reproduced may have copyright protection or may contain copyrighted material, NARA must provide you with a warning notice of copyright.

(f) Nothing in this section limits NARA's ability to make copies of USIA audiovisual records for preservation, arrangement, repair and rehabilitation, description, exhibition, security, or reference purposes.

### § 1256.102 What fees does NARA charge?

Copies of audiovisual records will only be provided under this subpart upon payment of fees in accordance with 44 U.S.C. 2116(c) and 22 U.S.C. 1461(b)(3). *See* § 1258.4(b) for additional information.

## PART 1258—FEES

Sec.

1258.1 [Reserved]
1253.2 What definitions apply to the regulations in this part?
1258.4 What costs make up the NARA fees?
1258.6 How does NARA calculate fees for individual products?
1258.8 How does NARA change fees for existing records reproductions?
1258.10 How does NARA develop and publicize new records reproduction fees?
1258.12 When does NARA provide records reproductions without charge?
1258.16 What is NARA's refund policy?

1258.18 Where can I find NARA's current fees and information on how to order reproductions?

AUTHORITY: 44 U.S.C. 2116(c) and 44 U.S.C. 2307.

SOURCE: 76 FR 62632, October 11, 2011, unless otherwise noted.

### § 1258.1 [Reserved]

### § 1258.2 What definitions apply to the regulations in this part?

*Accession* means the method of acquiring archival records or donated materials from various Governmental bodies.

*Archival records* means records that have been accessioned into the legal custody of NARA, donated historical materials in the legal custody of NARA and its Presidential libraries, and Congressional, Supreme Court, and other historical materials in NARA's physical custody and for which NARA has a formal agreement for their permanent retention.

*Certification* means affixing a seal to copies certifying the copies are a valid reproduction of a file; this service is available for an additional fee.

*Cost* means the total amount of money spent by the NATF for providing services including, but not limited to, salaries; benefits; rent; communication and utilities; printing and reproductions; consulting and other services; payments to other agencies/funds; supplies and materials; depreciation; system upgrades/replacements; *etc.*

*Custodial units* mean NARA's Federal Records Centers, National Personnel Records Center, archival reference operations nationwide, and Presidential Libraries.

*Fee* means the price researchers pay for reproductions of records. Certification of records is also a reproduction fee.

*Records center records* means Federal records in the physical custody of NARA records centers, but still in the legal custody of the agencies that created and maintained them.

### § 1258.4 What costs make up the NARA fees?

(a) 44 U.S.C. 2116(c) allows the NATF to recover all of its costs for providing records reproduction services to the public. The vast majority of materials that are reproduced are from the holdings of NARA, which require special handling, due to the age, condition and historical significance. Examples of special handling include the following:

(1) *The placement of each record by hand on the reproduction equipment.* Many of the records are fragile and have historical uniqueness; reproduction equipment operators must take great care in handling these records. For example, each page of a document must be carefully placed by hand on the reproduction equipment, a copy made, the page removed, and the process re-started.

(2) *Clarity and legibility of the reproduced records.* Older records may be handwritten and darkened from age, which requires extra time to make sure we produce copies that are as clear and legible as possible.

(3) *Inability to use automatic document feeders.* Because of the requirements in paragraph (a)(1) of this section, automatic document feeders cannot be used for the duplication of paper materials. This adds time and cost to the price of copying these irreplaceable documents.

(b) The NATF costs, at a minimum, include:

(1) Salaries and benefits of the NATF staff involved in all aspects of the records reproduction process (includes, but is not limited to, compensation for full- and part-time employees, temporary appointments, overtime, awards, Civil Service Retirement Service and Federal Employees' Retirement System contributions, health benefits, life insurance benefits and Thrift Savings Plan contributions).

(2) Travel and transportation (includes, but is not limited to, travel and transportation of persons, transportation of things, and contract mail service).

(3) Rent, communications and utilities (includes, but is not limited to, telecommunications, equipment rental, and postage).

(4) Printing and reproductions (includes, but is not limited to, commercial printing, advertising, and printing of forms).

(5) Consulting and other services (includes, but is not limited to, management and professional services, contract labor, work performed in support of reproduction orders, and maintenance of equipment).

(6) Payments to other agencies/funds (includes, but is not limited to, reimbursements and payments to other agencies and other funds within NARA). Specifically, the NATF ''hires'' the NARA custodial units to do reproduction work. In return, the NATF reimburses the custodial units for the cost of salaries and benefits.

(7) Supplies and materials (includes, but is not limited to, general supplies, and materials and parts).

(8) Depreciation (spreading the cost of an asset over the span of several years).

(9) System upgrades/replacement (includes, but is not limited to, installation of operating equipment, software upgrades, and system changes).

### § 1258.6 How does NARA calculate fees for individual products?

NARA calculates the fees for individual products using the following:

(a) *Cost summary*. A summary of all costs incurred by the NATF in providing records reproduction services.

(b) *Percent of revenue*. The percentage of the total NATF revenue represented by sales of a product. This is determined and used where a more accurate percentage based upon actual usage is not available. To calculate this percentage, an analysis is made to determine the current percent of NATF sales revenue represented by each product line. The sales volume is then reviewed with the custodial units to determine if this represents anticipated sales.

(c) *Actual cost percent calculation*. Using the information calculated in the Cost Summary, the actual revenue cost percentage is determined. In some cases, the actual percentage of cost can be calculated from available data or known constraints of the product line. For example, if the contractor responsible for providing copy support does not support the reproduction of a given product line then zero (0) percent of the contractor's costs would be allocated to that product line.

(d) *Forecasted volume*. The prediction of a product's sales volume in future year(s). These estimates are made by working with the custodial units and taking into account historical sales volume. An annual percent change is then estimated

(e) *Reimbursements to the custodial units*. The amount paid to the custodial units for records reproductive services in support of NATF customer orders. The NATF reimburses the custodial units for services rendered to the NATF for the reproduction of NARA holdings. To determine the reimbursement per copy for an item, past reimbursement fees are changed by the compounded annual Government salary changes as issued by the Office of Personnel Management for the fiscal years being projected. The new rates are reviewed with custodial unit personnel and adjustments are made as required.

(f) *Additional cost allocation*. The costs unique to a given product line. Each product line is evaluated to determine the costs that are unique to that product line, such as purchase and installation costs of specialty equipment, replacement costs for aging equipment, copier leases and maintenance costs, etc. These costs are then allocated against those product lines that use the equipment. Where costs cross product lines, the allocations are apportioned based upon the percent of the estimated copy volume for each product line.

(g) *Fee calculation*. The product fee is calculated by the following formula: {[(Percent of Revenue * NATF Overhead Costs) + Reimbursement + Additional Costs]/Projected Sales Volume}

This calculation is completed for each product.

(h) *Final review*. After the suggested new fees are calculated, NATF reviews them to establish the final fees. Fees may be adjusted across product lines to ensure that the NATF can succeed in total cost recovery.

### § 1258.8 How does NARA change fees for existing records reproductions?

(a) The NATF conducts periodic reviews of its fees to ensure that the costs of providing services to the public are properly recovered.

(b) Existing records reproduction fees may be adjusted annually based on the following factors:

(1) Inflation.

(2) The Office of Personnel Management (OPM) salary changes.

(3) Reallocation of shared costs across product lines using the methodology described in § 1258.6.

(4) The projected sales volume for the product.

(5) The actual sales volume for the product.

(6) The approval of the Archivist of the United States.

(d) NARA will place a notice on our Web site (*http://www.archives.gov*) annually when announcing that records reproduction fees will be adjusted in accordance with this regulation.

### § 1258.10 How does NARA develop and publicize new records reproduction fees?

(a) Custodial units prepare a justification proposal for a proposed records reproduction service and send the justification to the custodial unit office head, through appropriate channels, for concurrence and forwarding to NATF. The justification proposal includes, at a minimum, the following information:

(1) Estimated monthly volume of product orders based on available historical data;

(2) Identification of the equipment and supplies required to provide the product and service;

(3) Brief description of the process required to provide the product and service, including the amount of time for each number and grade level of staff.

(4) Identification of any services or products that will be replaced by the proposed products and services;

(5) Identification of other NARA units that may have a demand for the proposed services; and

(6) Any other relevant information.

(b) After receiving the proposal, NATF staff:

(1) Assesses the potential customer base for the proposed products and services, consulting other NARA offices.

(2) If the potential demand does not warrant establishing fees for new records reproduction products and services, NATF notifies the proposing office that the new product and service are not approved and the reasons why.

(3) If the potential demand warrants, NATF prepares a cost analysis following the methodology in § 1258.6 and develops a proposed recommended fee for review by NARA's Financial Resources Division and approval by the Archivist of the United States.

(c) *Notification of new records reproduction services and trial periods:* (1) The public will be notified of new records reproduction services, including the business case for determining initial fee, on-line at *http://www.archives.gov*, by press releases, and through NARA's social media outlets.

(2) New records reproduction services fees have an initial trial period of one year. During this time, the public is encouraged to provide feedback to NARA about the new records reproduction services and their fees as directed in the notification of the new services.

(3) Prior to the expiration of a trial period, NATF will assess the validity of the fees for the new records reproduction products and services, and make one of three determinations:

(i) Retain products, services and fees;

(ii) Retain products or services but adjust fees up or down; or

(iii) Discontinue products or services.

(d) The public will be notified of NATF determination, including business case for determination, in NARA research rooms nationwide, on-line at *http://www.archives.gov*, press releases, and through NARA's social media outlets.

### § 1258.12 When does NARA provide records reproductions without charge?

At the discretion of the Secretary of the NATF, customers are not charged a fee for records reproductions or certifications in the instances described in this section.

(a) When NARA furnishes copies of records to other elements of the Federal Government. However, a fee may be charged if the appropriate director determines that the service cannot be performed without reimbursement;

(b) When NARA wishes to disseminate information about its activities to the general public through press, radio,

television, and newsreel representatives;

(c) When the reproduction is to furnish the donor of a document or other gift with a copy of the original;

(d) When the reproduction is for individuals or associations having official voluntary or cooperative relations with NARA in its work;

(e) When the reproduction is for a foreign, State, or local government or an international agency and furnishing it without charge is an appropriate courtesy; and

(f) For records of other Federal agencies in NARA Federal records centers only:

(1) When furnishing the service free conforms to generally established business custom, such as furnishing personal reference data to prospective employers of former Government employees;

(2) When the reproduction of not more than one copy of the document is required to obtain from the Government financial benefits to which the requesting person may be entitled (*e.g.*, veterans or their dependents, employees with workmen's compensation claims, or persons insured by the Government);

(3) When the reproduction of not more than one copy of a hearing or other formal proceeding involving security requirements for Federal employment is requested by a person directly concerned in the hearing or proceeding; and

(4) When the reproduction of not more than one copy of a document is for a person who has been required to furnish a personal document to the Government (*e.g.*, a birth certificate required to be given to an agency where the original cannot be returned to the individual).

### § 1258.16 What is NARA's refund policy?

Due to the age, original media type, and general condition of many of the items in NARA's holdings, it is occasionally difficult to make a legible reproduction. NARA staff will notify customers if they anticipate that the original will result in a reproduction of questionable legibility before requesting the reproduction and after approval of the customer. After a records reproduction is completed, the product undergoes a review to determine if it is an accurate representation of the original item. Because of the preapproval process, NARA does not provide refunds except in special cases. If a customer requests a refund, a review is made of the order to determine if the customer was properly notified of the questionable nature of the original and if the product is a true representation of the original. If the customer authorized proceeding and the product is a true representation of the original, no refund will be issued.

### § 1258.18 Where can I find NARA's current fees and information on how to order reproductions?

(a) NARA's fee schedule, methods of payment, and ordering portal are located at *http://www.archives.gov*.

(b) Fee schedules for reproductions made from the holdings of Presidential libraries may differ because of regional cost variations. Presidential library fee schedules are available at *http://www.archives.gov/presidential-libraries/*. Some services may not be available at all NARA facilities.

(c) In order to preserve certain records which are in poor physical condition, NARA may restrict customers to photographic or other kinds of duplication instead of electrostatic copies.

[76 FR 62632, October 11, 2011, as amended at 78 FR 59825, Sept. 30, 2013]

# SUBCHAPTER D—DECLASSIFICATION

## PART 1260—DECLASSIFICATION OF NATIONAL SECURITY INFORMATION

### Subpart A—General Information

Sec.
1260.1 What is the purpose of this part?
1260.2 What definitions apply to the regulations in this part?
1260.4 What NARA holdings are covered by this part?

### Subpart B—Responsibilities

1260.20 Who is responsible for the declassification of classified national security Executive Branch information that has been accessioned by NARA?
1260.22 Who is responsible for the declassification of classified national security White House originated information in NARA's holdings?
1260.24 Who is responsible for declassification of foreign government information in NARA's holdings?
1260.26 Who is responsible for issuing special procedures for declassification of records pertaining to intelligence activities and intelligence sources or methods, or of classified cryptologic records in NARA's holdings?
1260.28 Who is responsible for declassifying Restricted Data, Formerly Restricted Data, and Transclassified Foreign Nuclear Information?

### Subpart C—The National Declassification Center (NDC)

1260.30 What is the NDC?
1260.32 How is the NDC administered?
1260.34 What are the responsibilities of the NDC?
1260.36 What are agency responsibilities with the NDC?
1260.38 How does the NDC ensure the quality of declassification reviews?
1260.40 What types of referrals will the NDC process?
1260.42 How does the NDC process referrals of Federal Records?
1260.44 How does the NDC process RAC Project referrals?
1260.46 How does the Department of Defense process referrals?

### Subpart D—Automatic Declassification

1260.50 How are records at NARA reviewed as part of the automatic declassification process?
1260.52 What are the procedures when agency personnel review records in NARA's legal and physical custody?
1260.54 Will NARA loan accessioned records back to the agencies to conduct declassification review?
1260.56 What are NARA considerations when implementing automatic declassification?

### Subpart E—Systematic Declassification

1260.60 How does the NDC facilitate systematic review of records exempted at the individual record or file series level?

### Subpart F—Mandatory Declassification Review (MDR)

1260.70 How does a researcher submit an MDR request?
1260.72 What procedures does NARA follow when it receives a request for Executive Branch records under MDR?
1260.74 What are agency responsibilities after receiving an MDR request forwarded by NARA?
1260.76 What are NARA's procedures after it has received the agency's declassification determinations?
1260.78 What is the appeal process when an MDR request for Executive Branch information in NARA's legal custody is denied in whole or in part?

### Subpart G—Reclassification of Records Transferred to NARA

1260.80 What actions must NARA take when information in its physical and legal custody is reclassified after declassification under proper authority?
1260.82 What actions must NARA take with information in its physical and legal custody that has been made available to the public after declassification without proper authority?

AUTHORITY: 44 U.S.C. 2101 to 2118; 5 U.S.C. 552; E.O. 13526, 75 FR 707, 3 CFR, 2009 Comp., p. 298; Presidential Memorandum of December 29, 2009 ''Implementation of the Executive Order, Classified National Security Information,'' 75 FR 733, 3 CFR, 2009 Comp., p. 412; 32 CFR Part 2001.

SOURCE: 76 FR 81828, Dec. 29, 2011, unless otherwise noted.

## Subpart A—General Information

### § 1260.1 What is the purpose of this part?

(a) This subchapter defines the responsibilities of NARA and other Federal agencies for declassification of classified national security information in the holdings of NARA. This part also describes NARA's procedures for:

(1) Operation of the National Declassification Center,

(2) Processing referrals to other agencies,

(3) Facilitating systematic reviews of NARA holdings, and

(4) Processing mandatory declassification review requests for NARA holdings.

(b) Regulations for researchers who wish to request access to materials containing classified national security information are found in 36 CFR part 1256.

(c) For the convenience of the user, the following table provides references between the sections contained in this part and the relevant sections of the Order and the Implementing Directive.

| CFR section | Related section of E.O. 13526 | Related section of Implementing Directive |
|---|---|---|
| 1260.20 Who is responsible for the declassification of classified national security Executive Branch information that has been accessioned by NARA? | 3.3, 3.3(d)(3), 3.6 | |
| 1260.22 Who is responsible for the declassification of classified national security White House originated information in NARA's holdings? | 3.3(d)(3), 3.6 | |
| 1260.24 Who is responsible for declassification of foreign government information in NARA's holdings? | 6.1(s) | |
| 1260.28 Who is responsible for declassifying Restricted Data (as defined by the Atomic Energy Act of 1954, as amended), Formerly Restricted Data (as defined in 10 CFR 1045.3, and Transclassified Foreign Nuclear Information (as defined in 32 CFR 2001.24(i))? | ..... | 2001.24(i) |
| 1260.34 What are the responsibilities of the NDC? | 3.3, 3.3(d)(3), 3.4 | |
| 1260.36 What are agency responsibilities with the NDC? | 3.3(d)(3) | |
| 1260.40 What types of referrals will the NDC process? | 3.3 | |
| 1260.42 How does the NDC process referrals of Federal Records? | 3.3(d)(3)(B) | |
| 1260.46 How does the Department of Defense process referrals? | 3.3 | |
| 1260.50 How are records at NARA reviewed as part of the automatic declassification process? | 3.3 | |
| 1260.52 What are the procedures when agency personnel review records in NARA's legal and physical custody? | 3.3 | 2001.30(p) |
| 1260.56 What are NARA considerations when implementing automatic declassification? | 3.3 | |
| 1260.72 What procedures does NARA follow when it receives a request for Executive Branch records under MDR? | 3.6(a), 3.6(b) | 2001.33 |
| 1260.74 What are agency responsibilities after receiving an MDR request forwarded by NARA? | 3.5(c) | |
| 1260.76 What are NARA's procedures after it has received the agency's declassification determinations? | ..... | Appendix A |
| 1260.78 What is the appeal process when an MDR request for Executive Branch information in NARA's legal custody is denied in whole or in part? | 3.3 | 2001.30(p), 2001.33 |
| 1260.80 What actions must NARA take when information in its physical and legal custody is reclassified after declassification under proper authority? | ..... | 2001.13 |
| 1260.82 What actions must NARA take with information in its physical and legal custody that has been made available to the public after declassification without proper authority? | ..... | 2001.13 |

### § 1260.2 What definitions apply to the regulations in this part?

*Classified national security information*, or *classified information*, means information that has been determined under Executive Order 13526 or any predecessor order to require protection against unauthorized disclosure and is marked to indicate its classified status when in documentary form.

*Declassification* means the authorized change in the status of information from classified information to unclassified information.

*Equity* refers to information:

(1) Originally classified by or under the control of an agency;

(2) In the possession of the receiving agency in the event of transfer of function; or

(3) In the possession of a successor agency for an agency that has ceased to exist.

*File series* means file units or documents arranged according to a filing system or kept together because they relate to a particular subject or function, result from the same activity, document a specific kind of transaction, take a particular physical form, or have some other relationship arising out of their creation, receipt, or use, such as restrictions on access or use.

*Integral file block* means a distinct component of a file series, as defined in this section, that should be maintained as a separate unit in order to ensure the integrity of the records. An integral file block may consist of a set of records covering either a specific topic or a range of time such as presidential administration or a 5-year retirement schedule within a specific file series that is retired from active use as a group. For purposes of automatic declassification, integral file blocks shall contain only records dated within 10 years of the oldest record in the file block.

*Mandatory declassification review* means the review for declassification of classified information in response to a request for declassification that meets the requirements under section 3.5 of Executive Order 13526.

*Records* means the records of an agency and Presidential materials or Presidential records, as those terms are defined in title 44, United States Code, including those created or maintained by a government contractor, licensee, certificate holder, or grantee that are subject to the sponsoring agency's control under the terms of the contract, license, certificate, or grant.

*Referral* means that information in an agency's records that was originated by or is of interest to another agency is sent to that agency for a determination of its classification status.

*Systematic declassification review* means the review for declassification of classified information, including previously exempted information, contained in records that have been determined by the Archivist of the United States to have permanent historical value in accordance with 44 U.S.C. 2107.

### § 1260.4 What NARA holdings are covered by this part?

The NARA holdings covered by this part are records legally transferred to NARA, including Federal records, 44 U.S.C. 2107; Presidential records, 44 U.S.C. 2201–2207; Nixon Presidential materials, 44 U.S.C. 2111 note; and donated historical materials, 44 U.S.C. 2111.

## Subpart B—Responsibilities

### § 1260.20 Who is responsible for the declassification of classified national security Executive Branch information that has been accessioned by NARA?

(a) Consistent with the requirements of section 3.3 of the Order on automatic declassification, the originating agency is responsible for declassification of its information and identifying equity holders.

(b) An agency may delegate declassification authority to NARA.

(c) If an agency does not delegate declassification authority to NARA, the agency is responsible for reviewing the records to identify the equities of other agencies before the date that the records become eligible for automatic declassification.

(d) NARA is responsible for the declassification of records in its legal custody of defunct agencies that have no successor. NARA will consult with agencies having an equity in the records before making declassification determinations in accordance with sections 3.3(d)(3) and 3.6 of the Order.

### § 1260.22 Who is responsible for the declassification of classified national security White House originated information in NARA's holdings?

(a) NARA is responsible for declassification of information from a previous administration that was originated by:

(1) The President and Vice President;

(2) The White House staff;

(3) Committees, commissions, or boards appointed by the President; or,

(4) Others specifically providing advice and counsel to the President or acting on behalf of the President.

(b) NARA will consult with agencies having equity in the records before making declassification determinations in accordance with sections 3.3(d)(3) and 3.6 of Executive Order 13526.

### § 1260.24 Who is responsible for declassification of foreign government information in NARA's holdings?

(a) The agency that received or classified the information is responsible for its declassification.

(b) In the case of a defunct agency, NARA is responsible for declassification of foreign government information, as defined in section 6.1(s) of the Order, in its holdings and will consult with the agencies having equity in the records before making declassification determinations.

### § 1260.26 Who is responsible for issuing special procedures for declassification of records pertaining to intelligence activities and intelligence sources or methods, or of classified cryptologic records in NARA's holdings?

(a) The Director of National Intelligence is responsible for issuing special procedures for declassification of classified records pertaining to intelligence activities and intelligence sources and methods.

(b) The Secretary of Defense is responsible for issuing special procedures for declassification of classified cryptologic records.

### § 1260.28 Who is responsible for declassifying Restricted Data, Formerly Restricted Data, and Transclassified Foreign Nuclear Information?

(a) Only designated officials within the Department of Energy (DOE) may declassify Restricted Data (RD) *(as defined by the Atomic Energy Act of 1954, as amended)*. The declassification of Formerly Restricted Data (FRD) *(as defined in 10 CFR 1045.3)* may only be performed after designated officials within DOE, in conjunction with designated officials within DOD, have determined that the FRD marking may be removed. Declassification of Transclassified Foreign Nuclear Information (TFNI) *(as defined in 32 CFR 2001.24(i))* may be performed only by designated officials within DOE.

(b) Any record that contains RD, FRD, or TFNI shall be excluded from automatic declassification and referred by the primary reviewing agency to DOE using a completed SF 715 to communicate both the referral action and the actions taken on the equities of the primary reviewing agency. Any record identified by the primary reviewing agency as potentially containing RD, FRD, or TFNI shall be referred to DOE using a completed SF 715.

## Subpart C—The National Declassification Center (NDC)

### § 1260.30 What is the NDC?

The National Declassification Center (NDC) is established within NARA to streamline declassification processes, facilitate quality-assurance measures, and implement standardized training for declassification of records determined to have permanent historical value.

### § 1260.32 How is the NDC administered?

(a) The NDC is administered by a Director, who shall be appointed by the Archivist of the United States, in consultation with the Secretaries of State, Defense, Energy, and Homeland Security, the Attorney General, and the Director of National Intelligence.

(b) The Archivist, in consultation with the representatives of the participants in the NDC and after receiving comments from the general public, shall develop priorities for declassification activities under the responsibility of the NDC that are based upon researcher interest and likelihood of declassification.

### § 1260.34 What are the responsibilities of the NDC?

The NDC shall coordinate the following activities:

(a) Referrals, to include:

(1) Timely and appropriate processing of all referrals in accordance with section 3.3(d)(3) of Executive Order 13526; and

(2) The exchange among agencies of detailed declassification guidance to

enable referrals as identified in paragraph (a)(1) of this section.

(b) General interagency declassification activities as necessary to fulfill the requirements of sections 3.3 and 3.4 of the Order;

(c) The development of effective, transparent, standard declassification work processes, training, and quality assurance measures;

(d) The development of solutions to declassifying information contained in electronic records and special media; and planning for solutions for declassifying information as new technologies emerge;

(e) The documentation and publication of declassification review decisions; and support of NDC declassification responsibilities by linking and using existing agency databases; and

(f) Storage, and related services, on a reimbursable basis, for Federal records containing classified national security information.

### § 1260.36 What are agency responsibilities with the NDC?

Agency heads shall fully cooperate with the Archivist and the activities of the NDC and provide the following resources for NDC operations:

(a) Adequate and current declassification guidelines to process referrals in accordance with section 3.3(d)(3) of the Order and as indicated in § 1260.54(a); and

(b) Assignment of agency personnel to the NDC, at the request of the Archivist, with delegated authority by the agency head to review and exempt or declassify information originated by that agency found in records accessioned into the National Archives of the United States; and

(c) Coordination with the NDC of the establishment of any agency centralized facilities and internal operations to conduct declassification reviews to ensure that such agencies conduct internal declassification reviews of records of permanent historical value.

### § 1260.38 How does the NDC ensure the quality of declassification reviews?

An interagency team of experienced declassification reviewers, established by NDC, conducts a sampling of reviewed records according to a sampling regime approved by a separate interagency program management team. The interagency team will verify that each series of agency reviewed records complies with the requirements of the Special Historical Records Review Plan (Supplement) dated March 3, 2000 (DOE–NARA Plan), pursuant to the requirements of Public Law 105–261 (112 Stat. 2259) and Public Law No. 106–65 (113 Stat. 938). Record series that cannot be verified to have been reviewed in accordance with the DOE–NARA Plan will not proceed through the NDC verification process until verification is received by the NDC. The DOE will participate on the interagency team to conduct the quality control reviews required by the DOE–NARA Plan in accordance with priorities established by the NDC.

### § 1260.40 What types of referrals will the NDC process?

The NDC processes referrals of both Federal records and Presidential records. Referrals identified in accessioned Federal records will be processed by the Interagency Referral Center (IRC); referrals identified in records maintained by the Presidential Libraries will be processed by the Remote Archives Capture (RAC) Project. (The RAC Project is a collaborative program to facilitate the declassification review of classified records in the Presidential Libraries in accordance with section 3.3 of the Order. In this project, classified Presidential records at the various Presidential Libraries are scanned and brought to the Washington, DC, metropolitan area in electronic form for review by equity-holding agencies.)

### § 1260.42 How does the NDC process referrals of Federal Records?

(a) All referrals are processed through the IRC.

(b) Agencies will have one year from the time they receive formal notification of referrals by the NDC to review their equity in the records. If an agency does not complete its review within one year of formal notification, its information will be automatically declassified in accordance with section

3.3(d)(3)(B) of the Order unless the information has been properly exempted by an equity holding agency under section 3.3 of the Order.

(c) Once notified, the agencies will coordinate their review with the NDC so the NDC can properly manage the workflow of the IRC.

### § 1260.44 How does the NDC process RAC Project referrals?

(a) The Presidential Libraries use the RAC Project to process referrals.

(b) Agencies will be notified of RAC Project referrals according to an annual prioritization schedule via the NDC.

(c) The RAC Project identifies the primary agency with equity in the record.

(d) The primary agency will have up to one year from the time it is notified of their referral to complete the review of its equity and identify all other agencies (''secondary agencies'') with an interest in the record. If an agency does not complete its review in one year, its equity will be automatically declassified.

(e) Secondary agencies receiving notification of their referrals through the RAC Project will have up to one year from the date of notification to complete their review.

### § 1260.46 How does the Department of Defense process referrals?

(a) The Department of Defense (DOD) established the Joint Referral Center (JRC) to review DOD agencies' records and all DOD equities within those records for declassification in accordance with section 3.3 of the Order.

(b) The JRC shall include sufficient quality assurance review policies that are in accordance with policies at the NDC and will provide the NDC with sufficient information on the results of these reviews to facilitate non-DOD agency referral processing and final archival processing for public release.

(c) NARA may loan accessioned records to the JRC for this purpose.

## Subpart D—Automatic Declassification

### § 1260.50 How are records at NARA reviewed as part of the automatic declassification process?

(a) Consistent with the requirements of section 3.3 of Executive Order 13526 on automatic declassification, NARA staff may review for declassification records for which the originating agencies have provided written authority to apply their approved declassification guides. The originating agency must review records for which this authority has not been provided.

(b) Agencies may choose to review their own records that have been transferred to NARA's legal custody, by sending personnel to the NARA facility where the records are located to conduct the declassification review.

(c) Classified materials in the Presidential Libraries may be referred to agencies holding equity in the records through the RAC Project.

### § 1260.52 What are the procedures when agency personnel review records in NARA's legal and physical custody?

(a) NARA will:

(1) Make the records available to properly cleared agency reviewers;

(2) Provide space for agency reviewers in the facility in which the records are located to the extent that space is available; and

(3) Provide training and guidance for agency reviewers on the proper handling of archival materials.

(b) Agency reviewers must:

(1) Follow NARA security regulations and abide by NARA procedures for handling archival materials;

(2) Use the Standard Form (SF) 715 and follow NARA procedures for identifying and documenting records that require exemption, referral, or exclusion in accordance with section 3.3 of the Order or 32 CFR 2001.30(p); and

(3) Obtain permission from NARA before bringing into a NARA facility computers, scanners, tape recorders, microfilm readers, and other equipment necessary to view or copy records. NARA will not allow the use of

any equipment that poses an unacceptable risk of damage to archival materials. See 36 CFR part 1254 for more information on acceptable equipment.

(4) Provide NARA with information, as requested by the Archivist and/or NDC Director, on their review so as to facilitate the processing of referrals and archival processing.

### § 1260.54 Will NARA loan accessioned records back to the agencies to conduct declassification review?

In rare cases, when agency reviewers cannot be accommodated at a NARA facility, NARA will consider a request to loan records back to an originating agency in the Washington, DC, metropolitan area for declassification review. Each request will be judged on a case-by-case basis. The requesting agency must:

(a) Ensure that the facility in which the documents will be stored and reviewed passes a NARA inspection to ensure that the facility maintains:

(1) The correct archival environment for the storage of permanent records; and

(2) The correct security conditions for the storage and handling of classified national security materials.

(b) Meet NARA requirements for ensuring the safety of the records;

(c) Abide by NARA procedures for handling of archival materials;

(d) Identify and mark documents that cannot be declassified in accordance with NARA procedures; and

(e) Obtain NARA approval for use of any equipment such as scanners, copiers, or cameras to ensure that they do not pose an unacceptable risk of damage to archival materials.

### § 1260.56 What are NARA considerations when implementing automatic declassification?

(a) *Integral File Blocks.* Classified records within an integral file block that have not been reviewed and properly exempted from declassification, or referred to an equity holder, will be automatically declassified on December 31 of the year that is 25 years from the date of the most recent record within the file block, except as specified in paragraphs (b), (c), and (d) of this section. For the purposes of automatic declassification, integral file blocks shall contain only records dated within 10 years of the oldest record in the block. The records of each Presidential Administration will be treated as an integral file block and will be scanned for declassification review through the RAC Project.

(b) *Special media records.* After consultation with the Director of the National Declassification Center and before the records are subject to automatic declassification, an agency head or senior agency official may delay automatic declassification for up to five additional years for classified information contained in media that make a review for possible declassification exemptions more difficult or costly. NARA, through the NDC, will coordinate processing of referrals made in these special media records as part of its overall prioritization strategy.

(c) *Referrals.* The IRC at the NDC will provide official notification for Federal records, while the RAC Project will provide formal notification for Presidential records. For agencies which fail to act on their referrals after formal notification by the IRC or the RAC Project, NARA will automatically declassify their information in accordance with section 3.3(d)(3)(B) of the Order.

(d) *Additional referrals.* Agencies will identify referrals in accordance with section 3.3(d)(3) of the Order. NARA will delay automatic declassification for up to 1 year for classified records that have been identified by the originating agency or by NARA as having classified information that requires referral that were not identified by the primary reviewing agency.

(e) *Other circumstances.* Information from another agency that has not been properly identified and referred is not subject to automatic declassification. When NARA identifies information, in accordance with section 3.3 of the Order, that agency will have up to 1 year from the date of formal notification to review its information for declassification.

(f) *Discovery of information inadvertently not reviewed.* When NARA identifies a file series or collection in its physical and legal custody that contains classified information over 25

years old and that was inadvertently not reviewed before the effective date of automatic declassification, NARA must report the discovery to the Information Security Oversight Office (ISOO) and to the responsible agency head or senior agency official within 90 days of discovery. ISOO, the responsible agency, and NARA will consult on a delay of up to three years to review the records.

## Subpart E—Systematic Declassification

### § 1260.60 How does the NDC facilitate systematic review of records exempted at the individual record or file series level?

(a) NARA, through the NDC, follows the procedures established in § 1260.52 above regarding agency access for review of exempt file series.

(b) NARA, through the NDC, will establish a prioritization schedule for review of exempted individual Federal records. This schedule will take into account upcoming exemption expiration, researcher interest and likelihood of declassification. This schedule will be included as part of the NDC annual work plan.

(c) The Presidential Libraries will work directly with agencies to facilitate the review of records exempted at the file series level.

(d) The Presidential Libraries, through the NDC, will establish a prioritization schedule for review of previously exempted classified materials in the Presidential Library system. These materials will be referred to agencies holding equity in the records via the RAC Project.

## Subpart F—Mandatory Declassification Review (MDR)

### § 1260.70 How does a researcher submit an MDR request?

(a) For Federal records in NARA's physical and legal custody, requests for MDR should be submitted to: National Archives at College Park, ANDC (Attn: MDR Staff), 8601 Adelphi Road, Room 2600, College Park MD 20740 or *specialaccess_foia@nara.gov;*

(b) For Presidential records, Nixon Presidential materials, or donated presidential materials in the custody of the Presidential Libraries, MDR requests should be submitted to the Presidential Library with physical and legal custody of the records;

(c) For Congressional records in NARA's custody, MDR requests should be submitted to: The Center for Legislative Archives, 700 Pennsylvania Ave. NW., Washington, DC 20408 or *legislative.archives@nara.gov*.

(d) For all records in NARA's physical and legal custody, MDR requests must describe the record or material with sufficient specificity to enable NARA to locate it with a reasonable amount of effort. If NARA is unable to locate the record or material, or requires additional information, NARA will inform the requester.

### § 1260.72 What procedures does NARA follow when it receives a request for Executive Branch records under MDR?

(a) NARA will review the requested records and determine if they have already been released. If not, NARA will refer copies of the records to the originating agency and to agencies that may have an interest or activity with respect to the classified information for declassification review. Agencies may also send personnel to a NARA facility where the records are located to conduct a declassification review, or may delegate declassification authority to NARA.

(b) When the records were originated by a defunct agency that has no successor agency, NARA is responsible for making the declassification determinations, but will consult with agencies having interest in or activity with respect to the classified information.

(c) If the document or information has been reviewed for declassification within the past 2 years, NARA may opt not to conduct a second review and may instead inform the requester of this fact and of the prior review decision and advise the requester of appeal rights in accordance with 32 CFR 2001.33.

(d) If NARA determines that a requester has submitted a request for the same information under both MDR and the Freedom of Information Act (FOIA), as amended, NARA will notify

the requester that he/she is required to elect one process or the other. If the requester fails to elect one or the other, the request will be treated under the FOIA, unless the requested information or materials are subject only to mandatory review.

(e) In every case, NARA will acknowledge receipt of the request and inform the requester of the action taken. If additional time is necessary to make a declassification determination on material for which NARA has delegated authority, NARA will tell the requester how long it will take to process the request and advise the requester of available appeal rights. NARA may also inform the requester if part or all of the requested information is referred to other agencies for declassification review in accordance with section 3.6(a) and (b) of the Executive Order.

(f) If NARA fails to provide the requester with a final decision on the mandatory review request within one year of the original date of the request, the requester may appeal to the Interagency Security Classification Appeals Panel (ISCAP).

### § 1260.74 What are agency responsibilities after receiving an MDR request forwarded by NARA?

(a) The agency receiving the referral will promptly process and review the referral for declassification and public release on a line-by-line basis in accordance with section 3.5(c) of the Order and communicate its review decisions to NARA.

(b) The agency must notify NARA of any other agency to which it forwards the request in those cases requiring the declassification determination of another agency to which NARA has not already sent a referral for review.

(c) The agency must return to NARA a complete copy of each referred document with the agency determination clearly stated to leave no doubt about the status of the information and the authority for its continued classification or its declassification.

### § 1260.76 What are NARA's procedures after it has received the agency's declassifications determination?

(a) If a document cannot be declassified in its entirety, the agency must return to NARA a copy of the document with those portions that require continued classification clearly marked. If a document requires continued classification in its entirety, the agency must return to NARA a copy of the document clearly so marked.

(b) NARA will notify the requester of the results of its review and make available copies of documents declassified in full and in part. If the requested information cannot be declassified in its entirety, NARA will send the requester a notice of the right to appeal the determination within 60 calendar days to the Deputy Archivist of the United States, National Archives and Records Administration, 8601 Adelphi Road, College Park, MD 20740–6001. Additional information on appeals is located in 36 CFR Part 1264 and in Appendix A to 32 CFR Part 2001 (Article VIII).

### § 1260.78 What is the appeal process when an MDR request for Executive Branch information in NARA's legal custody is denied in whole or in part?

(a) NARA shall respond to the requester in writing that her/his mandatory declassification review request was denied in full or in part and the rationale for the denial by using the appropriate category in either section 1.4 of the Order for information that is less than 25 years old, or section 3.3 of the Order for information that is older than 25 years, or 32 CFR 2001.30(p) for information governed by the Atomic Energy Act of 1954, as amended, or the National Security Act of 1947, as amended. NARA will send the requester a notice of the right to appeal the determination within 60 calendar days to the Deputy Archivist of the United States, National Archives and Records Administration, 8601 Adelphi Road, College Park, MD. If a final decision on the appeal is not made within 60 working days of the date of the appeal, the requester may appeal to the Interagency Security Classification Appeals Panel (ISCAP).

(b) NARA will process all appeals in accordance with 32 CFR 2001.33(a)(2)(iii). NARA will inform all agencies with equity interests in the denied information. Those agencies will assist NARA in the appellate process and provide NARA with final declassification review decisions in a timely manner and consistent with 32 CFR 2001.33(a)(2)(iii).

(c) NARA will also notify the requester of the right to appeal denials of access to the Interagency Security Classification Appeals Panel, Attn: Mandatory Declassification Review Appeals, c/o Information Security Oversight Office, National Archives and Records Administration, 700 Pennsylvania Avenue NW., Room 503, Washington, DC 20408; *iscap@nara.gov*.

(d) The pertinent NARA office or Presidential Library will coordinate the potential release of information declassified by the Interagency Security Classification Appeals Panel (ISCAP).

## Subpart G—Reclassification of Records Transferred to NARA

### § 1260.80 What actions must NARA take when information in its physical and legal custody is reclassified after declassification under proper authority?

(a) When information in the physical and legal custody of NARA that has been available for public use following declassification under proper authority is proposed for reclassification in accordance with 32 CFR 2001.13(b)(1), NARA shall take the following actions:

(1) The agency head making the determination to reclassify the information shall notify the Archivist of the potential reclassification in writing,

(2) The Archivist shall suspend public access pending approval or disapproval by the Director of the Information Security Oversight Office of the reclassification request, and

(3) The Director of the Information Oversight Office shall normally make a decision on the validity of the reclassification request within 30 days, and

(4) The decision of the Director of ISOO may be appealed by the Archivist or the agency head to the President through the National Security Advisor.

(5) Access shall remain suspended pending a prompt decision on the appeal.

(b) [Reserved]

### § 1260.82 What actions must NARA take with information in its physical and legal custody that has been made available to the public after declassification without proper authority?

(a) When information in the physical and legal custody of NARA has been made available for public use following declassification without proper authority and needs to have its original classification markings restored, the original classification authority shall notify the Archivist in writing in accordance with 32 CFR 2001.13(a)(1).

(b) If the Archivist does not agree with the reclassification decision and the information is more than 25 years old, the information will be temporarily withdrawn from public access and the Archivist will appeal the agency decision to the Director of ISOO, who will make a final decision in accordance with 32 CFR 2001.13(a)(1). The decision of the Director of ISOO may be appealed by the Archivist or the agency head to the President through the National Security Advisor.

(c) Information about records that have been reclassified or have had their classification restored as described in §§ 1260.80 and 1260.82 will be made available quarterly through the NARA Web site, *http://www.archives.gov/about/plans-reports/withdrawn/*. Information will include the responsible agency, NARA location, date withdrawn, number of records, and number of pages.

# SUBCHAPTER E—PRESIDENTIAL RECORDS

## PART 1270—PRESIDENTIAL RECORDS

### Subpart A—General Provisions

Sec.
1270.10 Scope of part.
1270.12 Application.
1270.14 Definitions.

### Subpart B—Actions Taken on Behalf of Former Presidents

1270.20 Designation of person or persons to act for former President.
1270.22 When Archivist may act for former President.

### Subpart C—Disposal of Presidential Records

1270.30 Disposal of Presidential Records by incumbent President.
1270.32 Disposal of Presidential Records in the custody of the Archivist.

### Subpart D—Access to Presidential Records

1270.40 Identification of restricted records.
1270.42 Denial of access to public; right to appeal.
1270.44 Exceptions to restricted access.
1270.46 Notice of intent to disclose Presidential records.

### Subpart E—Presidential Records Compiled for Law Enforcement Purposes

1270.50 Consultation with law enforcement agencies.

AUTHORITY: 44 U.S.C. 2201–2207.

SOURCE: 53 FR 50404, Dec. 15, 1988, unless otherwise noted.

## Subpart A—General Provisions

### § 1270.10 Scope of part.

These regulations implement the provisions of the Presidential Records Act of 1978, Pub. L. No. 95–591, 92 Stat. 2523–27, as amended by Pub. L. No. 98–497, sec. 107(b)(7), 98 Stat. 2287 (1984) (codified at 44 U.S.C. 2201–07), by setting forth the policies and procedures governing preservation, protection, and disposal of, and access to Presidential and Vice-Presidential records created during a term of office of the President or Vice President beginning on or after January 20, 1981. Nothing in these regulations is intended to govern procedures for assertion of, or response to, any constitutionally based privilege which may be available to an incumbent or former President.

### § 1270.12 Application.

(a) These regulations apply to all Presidential records created during a term of office of the President beginning on or after January 20, 1981.

(b) Vice-Presidential records shall be subject to the provisions of this part in the same manner as Presidential records. The Vice President's duties and responsibilities, with respect to Vice-Presidential records, shall be the same as the President's duties and responsibilities with respect to Presidential records. The Archivist's authority with respect to Vice-Presidential records shall be the same as the Archivist's authority with respect to Presidential records, except that the Archivist may, when he determines it to be in the public interest, enter into an agreement with a non-Federal archival repository for the deposit of Vice-Presidential records.

### § 1270.14 Definitions.

For the purposes of this part—

(a) The terms *documentary material*, *Presidential records*, *personal records*, *Archivist*, and *former President* have the meanings given them by 44 U.S.C. 2201 (1)–(5), respectively.

(b) The term *agency* has the meaning given it by 5 U.S.C. 551(1) (A)–(D) and 552(f).

(c) The term *Presidential archival depository* has the meaning given it by 44 U.S.C. 2101(1).

(d) The term *Vice-Presidential records* means documentary materials, or any reasonably segregable portion thereof, created or received by the Vice President, his immediate staff, or a unit or individual of the Office of the Vice President whose function is to advise and assist the Vice President, in the course of conducting activities which relate to or have an effect upon the carrying out of the constitutional,

statutory, or other official or ceremonial duties of the Vice President. The term includes documentary materials of the kind included under the term *Presidential records*.

(e) The term *filed* means the date something is received in the office of the official to whom it is addressed.

## Subpart B—Actions Taken on Behalf of Former Presidents

### § 1270.20 Designation of person or persons to act for former President.

(a) A President or former President may designate some person or persons to exercise, upon death or disability of the President or former President, any or all of the discretion or authority granted to the President or former President by chapter 22 of title 44 U.S.C.

(b) When a President or former President designates a person or persons to act for him pursuant to paragraph (a) of this section, this designation shall be effective only if the Archivist has received notice of the designation before the President or former President dies or is disabled.

(c) The notice required by paragraph (b) of this section shall be in writing, and shall include the following information:

(1) Name(s) of the person or persons designated to act for the President or former President;

(2) The current addresses of the person or persons designated; and

(3) The records, identified with reasonable specificity, over which the designee(s) will exercise discretion or authority.

### § 1270.22 When Archivist may act for former President.

In those instances where a President has specified, in accordance with 44 U.S.C. 2204(a), restrictions on access to Presidential records, but has not made a designation under § 1270.20 of this subpart, the Archivist shall, upon the death or disability of a President or former President, exercise the discretion or authority granted to a President or former President by 44 U.S.C. 2204.

## Subpart C—Disposal of Presidential Records

### § 1270.30 Disposal of Presidential records by incumbent President.

A President may, while in office, dispose of any Presidential records which in his opinion lack administrative, historical, informational, or evidentiary value if one of the following two sets of requirements is satisfied:

(a)(1) The President has obtained the written views of the Archivist concerning the proposed disposal; and

(2) The Archivist states in his written views to the President that he does not intend to request, with respect to the President's proposed disposal of Presidential records, the advice of the Committees on Rules and Administration and Governmental Affairs of the Senate, and the Committees on House Administration and Government Operations of the House of Representatives because he does not consider—

(i) The records proposed for disposal to be of special interest to the Congress; or

(ii) Consultation with the Congress concerning the proposed disposal to be in the public interest; or

(b)(1) The President has obtained the written views of the Archivist concerning the proposed disposal;

(2) The Archivist states in his written views either—

(i) That the records proposed for disposal may be of special interest to the Congress; or

(ii) That consultation with the Congress concerning the proposed disposal is in the public interest; and

(3) The President submits copies of the proposed disposal schedule to the Committees on Rules and Administration and Governmental Affairs of the Senate and the Committees on House Administration and Government Operations of the House of Representatives at least 60 calendar days of continuous session of Congress in advance of the proposed disposal date. For the purpose of this section, continuity of session is broken only by an adjournment of Congress *sine die*, and the days on which either House is not in session because of an adjournment of more than 3 days to

a day certain are excluded in the computation of the days in which Congress is in continuous session.

### § 1270.32 Disposal of Presidential Records in the custody of the Archivist.

(a) The Archivist may dispose of Presidential records which he has appraised and determined to have insufficient administrative, historical, informational, or evidentiary value to warrant their continued preservation.

(b) When Presidential records are scheduled for disposal pursuant to paragraph (a) of this section, the Archivist shall publish a notice of this disposal in the FEDERAL REGISTER at least 60 days before the proposed disposal date.

(c) The notice required by paragraph (b) of this section, shall include the following:

(1) A reasonably specific description of the records scheduled for disposal; and

(2) A concise statement of the reason for disposal of the records.

(d) Publication in the FEDERAL REGISTER of the notice required by paragraph (b) of this section shall constitute a final agency action for purposes of review under chapter 7 of title 5 U.S.C. (5 U.S.C. 701–706).

## Subpart D—Access to Presidential Records

### § 1270.40 Identification of restricted records.

(a) If a President, prior to the conclusion of his term of office or last consecutive term of office, as the case may be, specifies durations, not to exceed 12 years, for which access to certain information contained in Presidential records shall be restricted, in accordance with 44 U.S.C. 2204, the Archivist or his designee shall identify the Presidential records affected, or any reasonably segregable portion thereof, in consultation with that President or his designated representative(s).

(b) The Archivist shall restrict public access to the information contained in those records identified as affected until—

(1) The date on which the former President waives the restriction on disclosure of the record or information contained within;

(2) The expiration of the period of restriction specified under 44 U.S.C. 2204(a) for the category of information under which a certain record, or a portion thereof, was restricted; or

(3) The Archivist has determined that the former President or an agent of the former President has placed in the public domain through publication a restricted record or a reasonably segregable portion thereof, if this date is earlier than either of the dates specified in paragraph (b)(1) or (2) of this section.

### § 1270.42 Denial of access to public; right to appeal.

(a) Any person denied access to a Presidential record (hereinafter *the requester*) because of a determination that the record or a reasonable segregable portion of the record was properly restricted under 44 U.S.C. 2204(a), and not placed in the public domain by the former President or his agent, may file an administrative appeal with the appropriate Presidential library director at the address cited in part 1253 of this chapter.

(b) All appeals must be received by NARA within 35 calendar days of the date of NARA's denial letter.

(c) Appeals shall be in writing and shall set forth the reason(s) why the requester believes access to the records sought should be allowed. The requester shall identify the specific records sought.

(d) Upon receipt of an appeal, the appropriate Presidential library director has 30 working days from the date an appeal is received to consider the appeal and respond in writing to the requester. The director's response must state whether or not the Presidential records requested are to be released and the basis for this determination. The director's decision to withhold release of Presidential records is final and not subject to judicial review.

[53 FR 50404, Dec. 15, 1988, as amended at 70 FR 16717, Apr. 1, 2005]

### § 1270.44 Exceptions to restricted access.

(a) Notwithstanding any restrictions on access imposed pursuant to section

2204 or these regulations, and subject to any rights, defenses, or privileges which the United States or any agency or person may invoke, Presidential records shall be made available in the following instances:

(1) Pursuant to subpoena or other judicial process properly issued by a court of competent jurisdiction for the purposes of any civil or criminal investigation or proceeding;

(2) To an incumbent President if the records sought contain information which is needed for the conduct of current business of his office and is not otherwise available;

(3) To either House of Congress, or, to the extent of matter within its jurisdiction, to a Congressional committee or subcommittee if the records sought contain information which is needed for the conduct of business within its jurisdiction and is not otherwise available.

(b) Requests by an incumbent President, a House of Congress, or a Congressional committee or subcommittee pursuant to paragraph (a) of this section shall be addressed to the Archivist. All requests shall be in writing and, where practicable, identify the records sought with reasonable specificity.

(c) Presidential records of a former President shall be available to the former President or his designated representative upon request.

### § 1270.46 Notice of intent to disclose Presidential records.

(a) The Archivist or his designee shall notify a former President or his designated representative(s) before any Presidential records of his Administration are disclosed.

(b)(1) The notice given by the Archivist or his designee shall:

(i) Be in writing;

(ii) Identify the particular records with reasonable specificity;

(iii) State the reason for the disclosure; and

(iv) Specify the date on which the record will be disclosed.

(2) In the case of records to be disclosed in accordance with § 1270.44, the notice shall also:

(i) Identify the requester and the nature of the request;

(ii) Specify whether the requested records contain materials to which access would otherwise be restricted pursuant to 44 U.S.C. 2204(a) and identify the category of restriction within which the record to be disclosed falls; and

(iii) Specify the date of the request.

(c) If, after receiving the notice required by paragraph (a) of this section, a former President raises rights or privileges which he believes should preclude the disclosure of a Presidential record, and the Archivist nevertheless determines that the record in question should be disclosed, in whole or in part, the Archivist shall notify the former President or his representative of this determination. The notice given by the Archivist or his designee shall:

(1) Be in writing;

(2) State the basis upon which the determination to disclose the record is made; and

(3) Specify the date on which the record will be disclosed.

(d) The Archivist shall not disclose any records covered by any notice required by paragraph (a) or (c) of this section for at least 30 calendar days from receipt of the notice by the former President, unless a shorter time period is required by a demand for Presidential records under § 1270.44.

(e) Copies of all notices provided to former Presidents under this section shall be provided at the same time to the incumbent President.

## Subpart E—Presidential Records Compiled for Law Enforcement Purposes

### § 1270.50 Consultation with law enforcement agencies.

(a) For the processing of Presidential records compiled for law enforcement purposes that may be subject to 5 U.S.C. 552(b)(7), the Archivist shall request specific guidance from the appropriate Federal agency on the proper treatment of a record if there is no general guidance applicable, if the record is particularly sensitive, or if the type of record or information is widespread throughout the files.

(b) When specific agency guidance is requested under paragraph (a) of this section, the Archivist shall notify the

appropriate Federal agency of the decision regarding disclosure of the specific documents. Notice shall include the following:

(1) A description of the records in question;

(2) Statements that the records described contain information compiled for law enforcement purposes and may be subject to the exemption provided by 5 U.S.C. 552(b)(7) for records of this type; and,

(3) The name of a contact person at NARA.

(c) Agency guidance under this section is not binding on the Archivist. The final determination on whether Presidential records may be subject to the exemption in 5 U.S.C. 552(b)(7) is the Archivist's responsibility.

# SUBCHAPTER F—NIXON PRESIDENTIAL MATERIALS

## PART 1275—PRESERVATION AND PROTECTION OF AND ACCESS TO THE PRESIDENTIAL HISTORICAL MATERIALS OF THE NIXON ADMINISTRATION


Sec.
1275.1 Scope of part.

### Subpart A—General Provisions

1275.10 Purpose.
1275.12 Application.
1275.14 Legal custody.
1275.16 Definitions.
1275.18 Requests or demands for access.

### Subpart B—Preservation and Protection

1275.20 Responsibility.
1275.22 Security.
1275.24 Archival processing.
1275.26 Access procedures.
1275.28 Extraordinary authority during emergencies.

### Subpart C—Access to Materials by Former President Nixon, Federal Agencies, and for Use in Any Judicial Proceeding

1275.30 Access by former President Nixon.
1275.32 Access by Federal agencies.
1275.34 Access for use in judicial proceedings.

### Subpart D—Access by the Public

1275.40 Scope of subpart.
1275.42 Processing period; notice of proposed opening.
1275.44 Rights and privileges; right to a fair trial.
1275.46 Segregation and review; Senior Archival Panel; Presidential Materials Review Board.
1275.48 Transfer of materials.
1275.50 Restriction of materials related to abuses of governmental power.
1275.52 Restriction of materials of general historical significance unrelated to abuses of governmental power.
1275.54 Periodic review of restrictions.
1275.56 Appeal of restrictions.
1275.58 Deletion of restricted portions.
1275.60 Requests for declassification.
1275.62 Reference room locations, hours, and rules.
1275.64 Reproduction of tape recordings of Presidential conversations.
1275.66 Reproduction and authentication of other materials.
1275.68 Amendment of regulations.
1275.70 Freedom of information requests.

APPENDIX A TO PART 1275—SETTLEMENT AGREEMENT


AUTHORITY: 44 U.S.C. 2104, 2111 note.

SOURCE: 51 FR 7230, Feb. 28, 1986, unless otherwise noted.

### § 1275.1 Scope of part.

This part sets forth policies and procedures concerning the preservation and protection of and access to the tape recordings, papers, documents, memorandums, transcripts, and other objects and materials which constitute the Presidential historical materials of Richard M. Nixon, covering the period beginning January 20, 1969, and ending August 9, 1974.

## Subpart A—General Provisions

### § 1275.10 Purpose.

This part 1275 implements the provisions of title I of the Presidential Recordings and Materials Preservation Act (Pub. L. 93–526; 88 Stat. 1695). It prescribes policies and procedures by which the National Archives and Records Administration will preserve, protect, and provide access to the Presidential historical materials of the Nixon Administration.

### § 1275.12 Application.

This part 1275 applies to all of the Presidential historical materials of the Nixon Administration in the custody of the Archivist of the United States pursuant to the provisions of title I of the Presidential Recordings and Materials Preservation Act (Pub. L. 93–526; 88 Stat. 1695).

### § 1275.14 Legal custody.

The Archivist of the United States has or will obtain exclusive legal custody and control of all Presidential historical materials of the Nixon Administration held pursuant to the provisions of title I of the Presidential Recordings and Materials Preservation Act (Pub. L. 93–526; 88 Stat. 1695).

**§ 1275.16 Definitions.**

For the purposes of this part 1275, the following terms have the meaning ascribed to them in this § 1275.16.

(a) *Presidential historical materials.* The term *Presidential historical materials* (also referred to as *historical materials* and *materials*) shall mean all papers, correspondence, documents, pamphlets, books, photographs, films, motion pictures, sound and video recordings, machine-readable media, plats, maps, models, pictures, works of art, and other objects or materials made or received by former President Richard M. Nixon or by members of his staff in connection with his constitutional or statutory powers or duties as President and retained or appropriate for retention as evidence of or information about these powers or duties. Included in this definition are materials relating to the political activities of former President Nixon or members of his staff, but only when those activities directly relate to or have a direct effect upon the carrying out of constitutional or statutory powers or duties. Excluded from this definition are documentary materials of any type that are determined to be the official records of an agency of the Government; private or personal materials; stocks of publications, processed documents, and stationery; and extra copies of documents produced only for convenience or reference when they are clearly so identified.

(b) *Private or personal materials.* The term *private or personal materials* shall mean those papers and other documentary or commemorative materials in any physical form relating solely to a person's family or other non-governmental activities, including private political associations, and having no connection with his constitutional or statutory powers or duties as President or as a member of the President's staff.

(c) *Abuses of governmental power popularly identifed under the generic term ''Watergate.''* The term *abuses of governmental power popularly identified under the generic term ''Watergate''* (also referred to as *abuses of governmental power*), shall mean those alleged acts, whether or not corroborated by judicial, administrative or legislative proceedings, which allegedly were conducted, directed or approved by Richard M. Nixon, his staff or persons associated with him in his constitutional or statutory functions as President, or as political activities directly relating to or having a direct effect upon those functions, and which—

(1) Were within the purview of the charters of the Senate Select Committee on Presidential Campaign Activities or the Watergate Special Prosecution Force; or

(2) Are circumscribed in the Articles of Impeachment adopted by the House Committee on the Judiciary and reported to the House of Representatives for consideration in House Report No. 93–1305.

(d) *General historical significance.* The term *general historical significance* shall mean having administrative, legal, research or other historical value as evidence of or information about the constitutional or statutory powers or duties of the President, which an archivist has determined is of a quality sufficient to warrant the retention by the United States of materials so designated.

(e) *Archivist.* The term *Archivist* shall mean the Archivist of the United States or his designated agent. The term *archivist* shall mean an employee of the National Archives and Records Administration who, by education or experience, is specially trained in archival science.

(f) *Agency.* The term *agency* shall mean an executive department, military department, independent regulatory or nonregulatory agency, Government corporation, Government-controlled corporation, or other establishment in the executive branch of the Government including the Executive Office of the President. For purposes of § 1275.32 only, the term *agency* shall also include the White House Office.

(g) *Archival processing.* The term *archival processing* may include the following general acts performed by archivists with respect to the Presidential historical materials: Shelving boxes of documents in chronological, alphabetical, numerical or other sequence; surveying and developing a location register and cross-index of the boxes; arranging materials; refoldering and reboxing the documents and

affixing labels; producing finding aids such as folder title lists, scope and content notes, biographical data, and series descriptions; rewinding, duplicating and preserving the original tape recordings; enhancing the tape recordings on which the conversations are wholly or partially unintelligible so that extraneous noises may be filtered out; producing general subject matter logs of the tape recordings; reproducing and transcribing tape recordings; reviewing the materials to identify items that appear subject to restriction; identifying items in poor physical condition and assuring their preservation; identifying materials requiring further processing; and preparation for public access of all materials which are not subject to restriction.

(h) *Staff*. The term *staff* shall mean those persons whose salaries were paid fully or partially from appropriations to the White House Office or Domestic Council, or who were detailed on a nonreimbursable basis to the White House Office or Domestic Council from any other Federal activity; or those pesons who otherwise were designated as assistants to the President, in connection with their service in that capacity; or any persons whose files were sent to the White House Central Files Unit or Special Files Unit, for purposes of those files.

(i) *National security classified information*. The term *national security classified information* shall mean any matter which is security classified under existing law, and has been or should be designated as such.

[51 FR 7230, Feb. 28, 1986, as amended at 61 FR 17844, Apr. 23, 1996]

### § 1275.18 Requests or demands for access.

Each agency which receives a request or legal demand for access to Presidential historical materials of the Nixon Administration shall immediately forward the request or demand to the Archivist of the United States, National Archives and Records Administration (NARA), Washington, DC 20408.

## Subpart B—Preservation and Protection

### § 1275.20 Responsibility.

The Archivist is responsible for the preservation and protection of the Nixon Presidential historical materials.

[61 FR 17845, Apr. 23, 1996]

### § 1275.22 Security.

The Archivist is responsible for providing adequate security for the Presidential historical materials.

### § 1275.24 Archival processing.

When authorized by the Archivist and until the commencement of archival processing in accordance with subpart D of this part, archivists may process the Presidential historical materials to the extent necessary for protecting and preserving the materials, and for providing authorized access to the materials pursuant to subpart C of this part.

### § 1275.26 Access procedures.

(a) The Archivist will receive and/or prepare appropriate documentation of each access authorized under this part 1275.

(b) Entry to the records storage areas will be provided by the Archivist only to archival, maintenance, security, or other necessary personnel or to Mr. Nixon or his agent. Two persons, at least one of whom represents the Archivist, will be present at all times that records storage areas are occupied.

(c) The Archivist will determine that each individual having access to the Presidental historical materials has a security clearance equivalent to the highest degree of national security classification that may be applicable to any of the material examined.

(d) The Archivist will provide former President Nixon or his designated attorney or agent (hereinafter Mr. Nixon), prior notice of, and allow him to be present during, each search necessary to comply with an authorized access under § 1275.32 or § 1275.34.

(e) Only NARA archivists shall conduct searches necessary to comply with

authorized accesses under §§ 1275.32 and 1275.34.

(f) Prior to releasing Presidential historical materials in accordance with an access authorized under § 1275.32 or § 1275.34, the Archivist will give Mr. Nixon notice of the nature and identity of, and at his request allow him access to, those Presidential historical materials which the archivists have determined are covered by the subpoena, or other lawful process, or request. The notice will also inform Mr. Nixon that he may file a claim with the Archivist objecting to the release of all or portions of the described materials within 5 workdays of his receiving the notice described herein. The claim should detail the alleged rights and privileges of Mr. Nixon which would be violated by the release of the materials. The Archivist will refrain from releasing any of the materials to the requester during this period, and while any claim of right or privilege is pending before him, will refrain from releasing the materials subject to the claim.

(g) The Archivist will notify Mr. Nixon in writing of the administrative determination on any claims filed in accordance with paragraph (f) of this section. In the event the determination is wholly or partially adverse to the claim, the Archivist will refrain from releasing the materials to the requester for an additional 5 workdays from Mr. Nixon's receipt of the determination.

(h) Whenever possible, a copy, which shall be certified upon request, instead of the original documentary Presidential historical materials shall be provided to comply with a subpoena or other lawful process or request. Whenever the original documentary material is removed, a certified copy of the material shall be inserted in the proper file until the return of the original.

### § 1275.28 Extraordinary authority during emergencies.

In the event of an emergency that threatens the physical preservation of the Presidential historical materials or their environs, the Archivist will take such steps as may be necessary, including removal of the materials to temporary locations outside the metropolitan area of the District of Columbia, to preserve and protect the materials.

## Subpart C—Access to Materials by Former President Nixon, Federal Agencies, and For Use in Any Judicial Proceeding

### § 1275.30 Access by former President Nixon.

In accordance with the provisions of subpart B of this part, former President Richard M. Nixon or his designated agent shall at all times have access to Presidential historical materials in the custody and control of the Archivist.

### § 1275.32 Access by Federal agencies.

In accordance with the provisions of subpart B of this part, any Federal agency or department in the executive branch shall have access for lawful Government use to the Presidential historical materials in the custody and control of the Archivist to the extent necessary for ongoing Government business. The Archivist will only consider written requests from heads of agencies or departments, deputy heads of agencies or departments, or heads of major organizational components or functions within agencies or departments.

### § 1275.34 Access for use in judicial proceedings.

In accordance with the provisions of subpart B of this part, and subject to any rights, defenses, or privileges which the Federal Government or any person may invoke, the Presidential historical materials in the custody and control of the Archivist will be made available for use in any judicial proceeding and are subject to subpoena or other lawful process.

## Subpart D—Access by the Public

### § 1275.40 Scope of subpart.

This subpart sets forth policies and procedures concerning public access to the Presidential historical materials of Richard M. Nixon.

**§ 1275.42 Processing period; notice of proposed opening.**

(a)(1) The archivists will conduct archival processing of those materials other than tape recordings to prepare them for public access. In processing the materials, the archivists will give priority to segregating private or personal materials and transferring them to their proprietary or commemorative owner in accordance with § 1275.48. In conducting such archival processing, the archivists will restrict portions of the materials pursuant to §§ 1275.50 and 1275.52. All materials other than tape recordings to which reference is made in § 1275.64 will be prepared for public access and released subject to restrictions or outstanding claims or petitions seeking such restrictions. The Archivist will open for public access each integral file segment of materials upon completion of archival processing of that segment.

(2) The archivists will conduct archival processing of the tape recordings to prepare them for public access in accordance with the provisions set forth in the Settlement Agreement (see Appendix A to this part). In conducting the archival processing of the tape recordings, the archivists will restrict segments of the tape recordings pursuant to §§ 1275.50 and 1275.52. The tape segments which consist of abuses of governmental power information, as defined in § 1275.16(c), will be given priority processing by the archivists and will be prepared for public access and released following review and resolution of objections from the Nixon estate and other interested parties as set forth in the Settlement Agreement (see Appendix A to this Part). After the tape segments which consist of abuses of governmental power information have been released, the archivists will conduct archival processing of those tape recordings which were taped in the Cabinet Room, as set forth in the Settlement Agreement, Appendix A to this Part. Following release of the Cabinet Room tape recordings, the remaining tape recordings will be prepared for public access and released in five segments in accordance with the schedule set forth in the Settlement Agreement. In addition, NARA will identify and return any additional private or personal segments to the Nixon estate, at approximately the time that NARA proposes each segment for public release.

(b) At least 30 calendar days prior to the opening to public access of any integral file segment of the materials, the Archivist will publish notice in the FEDERAL REGISTER of the proposed opening. The notice will reasonably identify the material to be opened and will include a reference to the right of any interested person to file a claim or petition in accordance with § 1275.44. Copies of the notice will be sent to the incumbent President of the United States or his designated agent and by first-class mail to the last known address of: Mr. Nixon, or his designated agent or heirs; any former staff member reasonably identifiable as the individual responsible for creating or maintaining the file segment proposed to be opened; any individual named in the material which the Archivist may not restrict in accordance with § 1275.50(b) because the material is essential to an understanding of any abuse of governmental power; and any persons named in the materials who are registered with the National Archives and Records Administration in accordance with paragraph (c) of this section.

(c) The Archivist will maintain a registry which shall contain the names and mailing addresses of persons who wish to receive personal notice of the proposed opening of integral file segments of the materials when those segments contain references about them. To be included in the registry, a person must submit his/her name and mailing address to the National Archives and Records Administration (NLN), Washington, DC 20408. Both the envelope and letter should be prominently marked, ''Nixon Materials Registry.'' By submitting his/her name for inclusion in the registry, a person agrees to reimburse the United States for the cost of first-class postage for each instance of personal notice received.

[51 FR 7230, Feb. 28, 1986, as amended at 61 FR 17845, Apr. 23, 1996]

**§ 1275.44 Rights and privileges; right to a fair trial.**

(a) Within 30 days following publication of the notice prescribed in

§ 1275.42(b), any person claiming a legal or constitutional right or privilege which would prevent or limit public access to any of the materials shall notify the Archivist in writing of the claimed right or privilege and the specific materials to which it relates. Unless the claim states that particular materials are private or personal (see paragraph (d) of this section), the Archivist will notify the claimant by certified mail, return receipt requested, of his decision regarding public access to the pertinent materials. If that decision is adverse to the claimant, the Archivist will refrain from providing public access to the pertinent materials for at least 30 calendar days from receipt by the claimant of such notice.

(b) Within 30 days following publication of the notice prescribed in § 1275.42(b), officers of any Federal, State, or local court and other persons who believe that public access to any of the materials may jeopardize an individual's right to a fair and impartial trial should petition the Archivist setting forth the relevant circumstances that warrant withholding specified materials. The Archivist will notify the petitioner by certified mail, return receipt requested, of his decision regarding public access to the pertinent materials. If that decision is adverse to the petitioner, the Archivist will refrain from providing public access to the pertinent materials for at least 30 calendar days from receipt by the petitioner of such notice.

(c) In reaching decisions required by paragraphs (a) and (b) of this section, the Archivist may consult with other appropriate Federal agencies. If these consultations require the transfer of copies of the materials to Federal officials in agencies other than the National Archives and Records Administration, the Archivist will transfer these copies in accordance with the procedures prescribed in §§ 1275.26 and 1275.32.

(d) Within 30 days following publication of notice prescribed in § 1275.42(b), any person claiming that materials proposed for public access are in fact private or personal, as defined in § 1275.16(b), and that he or she is the proprietary or commemorative owner of those materials shall notify the Archivist in writing. The claim shall describe the specific materials to which it refers, and the claimant's basis for concluding that these materials are private or personal. Upon receipt of such a claim, the Archivist will transmit it to the Presidential Materials Review Board for its consideration and determination in accordance with § 1275.46(i). The Archivist will refrain from providing public access to the pertinent materials or from returning them to the claimant for at least 30 calendar days from receipt by the claimant or any intervening parties of the Board's determination.

(e)(1) In place of the right to make all other objections with respect to the tape segments that NARA has designated as abuses of governmental power materials, the Nixon estate may object to their release only on the ground that such designation by NARA is clearly inconsistent with the term ''abuses of governmental power'' as used in § 104(a)(1) of the Presidential Recordings and Materials Preservation Act (PRMPA) and defined in § 1275.16(c), as qualified by § 1275.50(b). Any such objection may not be based on isolated instances of alleged failure by NARA to apply the appropriate review standard, but only on a pattern of misapplication of the requirements of the PRMPA and its implementing regulations. Further, any such objection must be accompanied by specific examples of alleged review errors and contain sufficient information to enable the review panel of three Presidential Library archivists appointed by the Archivist, as described in the Settlement Agreement, Appendix A to this Part, to locate those examples readily.

(2) If an objection is made by the Nixon estate to the abuses of governmental power tape segments, the matter shall be immediately referred to a panel of three Presidential Library archivists appointed by the Archivist as set forth in the Settlement Agreement, Appendix A to this Part. The decision of the panel shall be either that the Nixon estate's objection is sustained or that it is rejected. The decision shall include a brief statement of the panel's reasons, but it need not include an item-by-item determination. In deciding whether the designation by NARA

of the material proposed to be released is clearly inconsistent with the definition of ''abuses of governmental power'', the panel shall consider whether the release would seriously injure legitimate interests of identifiable individuals, whether the errors suggest a pattern of misinterpretation, and any other factor that bears on the issue of whether NARA's designation of material as relating to ''abuses of governmental power'' was reasonable, considered as a whole. The panel's decision shall be final and binding on all parties to the *Kutler* litigation, and no party may exercise any right to appeal to any person, board, or court that might otherwise be available.

(3) The Nixon estate may, at any time, elect to use the procedures outlined in paragraphs (e)(1) and (e)(2) of this section for the tape recordings other than the abuses of governmental power segments, except that the standard under which objections shall be made by the Nixon estate, and under which the review panel shall decide their merits, is whether the release taken as a whole is plainly inconsistent with the requirements of the Presidential Recordings and Materials Preservation Act of 1974 and these regulations. If the Nixon estate elects to use the procedures in paragraph 1 of the Settlement Agreement (Appendix A to this Part) in place of the provisions in paragraphs 4 (b) and (d) and 5(c) of the Settlement Agreement for a tape segment, the estate cannot subsequently revert back to the formal objection process set forth in this section for that tape segment.

[51 FR 7230, Feb. 28, 1986; 51 FR 8671, Mar. 13, 1986, as amended at 61 FR 17845, Apr. 23, 1996]

### § 1275.46 Segregation and review; Senior Archival Panel; Presidential Materials Review Board.

(a) During the processing period described in § 1275.42(a), the Archivist will assign archivists to segregate private or personal materials, as defined in § 1275.16(b). The archivists shall have sole responsibility for the initial review and determination of private or personal materials. At all times when the archivists or other authorized officials have access to the materials in accordance with these regulations, they shall take all reasonable steps to minimize the degree of intrusion into private or personal materials. Except as provided in these regulations, the archivists or other authorized officials shall not disclose to any person private or personal or otherwise restricted information learned as a result of their activities under these regulations.

(b) During the processing period described in § 1275.42(a), the Archivist will assign archivists to segregate materials neither relating to abuses of governmental power, as defined in § 1275.16(c), nor otherwise having general historical significance, as defined in § 1275.16(d). The archivists shall have sole responsibility for the initial review and determination of those materials which are not related to abuses of governmental power and do not otherwise have general historical significance.

(c) During the processing period described in § 1275.42(a), the Archivist will assign archivists to segregate materials subject to restriction, as prescribed in §§ 1275.50 and 1275.52. The archivists shall have sole responsibility for the initial review and determination of materials that should be restricted. The archivists shall insert a notification of withdrawal at the front of the file folder or container affected by the removal of restricted material. The notification shall include a brief description of the restricted material and the basis for the restriction as prescribed in §§ 1275.50 and 1275.52.

(d) If the archivists are unable to make a determination required in paragraphs (a), (b), or (c) of this section, or if the archivists conclude that the required determination raises significant issues involving interpretation of these regulations or will have far-reaching precedential value, the archivists shall submit the pertinent materials, or representative examples of them, to a panel of senior archivists selected by the Archivist. The Panel shall then have the sole responsibility for the initial determination required in paragraphs (a), (b), or (c) of this section.

(e) If the Senior Archival Panel is unable to make a determination required in paragraph (d) of this section, or if the panel concludes that the required

determination raises significant issues involving interpretation of these regulations or will have far-reaching precedential value, the Panel shall certify the matter and submit the pertinent materials, or representative examples of them, to the Presidential Materials Review Board.

(f) The Presidential Materials Review Board (Board) shall consist of the Archivist, who shall serve as Chairman, and the following additional members:

(1) The Assistant Archivist for the Office of the National Archives;

(2) The Assistant Archivist for the Office of the Presidential Libraries;

(3) The Director of the Legal Counsel Staff of the National Archives and Records Administration; and

(4) The Historian of a Federal agency who shall be selected by the Archivist in his capacity as Chairman.

The Board shall meet at the call of the Chairman. Three members of the Board shall constitute a quorum for the conduct of the Board's business, although each member of the Board may participate in all of the Board's decisions. Members of the Board may be represented by their delegates on those occasions when they are unable to attend the meetings of the Board. The Board may consult with officials of interested Federal agencies in formulating its decisions. To the extent these consultations require the transfer of copies of materials to Federal officials outside the National Archives and Records Administration, the Board shall comply with the requirements of §§ 1275.26 and 1275.32.

(g) When the matter certified to the Board by the Senior Archival Panel involves a determination required in paragraphs (a) or (b) of this section, the Board shall prepare a final written decision, together with dissenting and concurring opinions, of the proper categorization and disposition of the pertinent materials. The Board's decision will be the final administrative determination.

(h) When the matter certified to the Board by the Senior Archival Panel involves a determination required in paragraph (c) of this section, the Board shall recommend an initial determination to the Senior Archival Panel, which shall retain the sole responsibility for the initial determination.

(i) When the Board considers a matter referred to it by the Archivist as provided in § 1275.44(d), it shall follow these procedures:

(1) The Board shall notify the claimant of its consideration of the claim, and invite the claimant to supplement at his discretion the basis for the claim.

(2) The Board will publish notice in the FEDERAL REGISTER, advising the public of its consideration of the claim, and describing the materials in question as fully as reasonably possible without disclosing arguably private or personal information. The notice will further advise that any member of the public may petition the Board within 15 calendar days of the publication of notice, setting forth the intervenor's views concerning the public or private nature of the materials.

(3) The Board shall take into account the positions maintained by the claimant and any intervenors in reaching its decision. The Board shall issue its decision, including dissenting and concurring opinions, no sooner than 20 days nor later than 60 days from the publication of notice in the FEDERAL REGISTER provided in paragraph (h)(2), of this section. The Board's decision shall be the final administrative determination. The Archivist will notify the claimant and any intervenors of the Board's decision by certified mail, return receipt requested, and shall refrain from acting upon that decision for 30 calendar days as provided in § 1275.44(d).

[51 FR 7230, Feb. 28, 1986, as amended at 61 FR 17845, Apr. 23, 1996]

### § 1275.48 Transfer of materials.

(a) The Archivist will transfer sole custody and use of those materials determined to be private or personal, or to be neither related to abuses of governmental power nor otherwise of general historical significance, to former President Nixon's estate, or, when appropriate and after notifying the Nixon estate, to the former staff member having primary proprietary or commemorative interest in the materials. Such materials to be transferred include all

segments of the original tape recordings that have been or will be identified as private or personal.

(b) Materials determined to be neither related to abuses of governmental power nor otherwise of general historical significance, and transferred pursuant to paragraph (a) of this section, shall upon such transfer no longer be deemed Presidential historical materials as defined in § 1275.16(a).

[51 FR 7230, Feb. 28, 1986, as amended at 61 FR 17845, Apr. 23, 1996; 64 FR 56678, Oct. 21, 1999]

### § 1275.50 Restriction of materials related to abuses of governmental power.

(a) The Archivist will restrict access to materials determined during the processing period to relate to abuses of governmental power, as defined in § 1275.16(c), when:

(1) The Archivist, in accordance with § 1275.44, is in the process of reviewing or has determined the validity of a claim by any person of a legal or constitutional right or privilege; or

(2) The Archivist, in accordance with § 1275.44, is in the process of reviewing or has determined the validity of a petition by any person of the need to protect an individual's right to a fair and impartial trial; or

(3) The release of the materials would violate a Federal statute; or

(4) The materials are authorized under criteria established by Executive order to be kept secret in the interest of national defense or foreign policy, provided that any question as to whether materials are in fact properly classified or are properly subject to classification shall be resolved in accordance with the applicable Executive order or as otherwise provided by law. However, the Archivist may waive this restriction when:

(i)(A) The requester is engaged in a historical research project; or

(B) The requester is a former Federal official who had been appointed by the President to a policymaking position and who seeks access only to those classified materials which he originated, reviewed, signed or received while in public office; and

(ii) The requester has a security clearance equivalent to the highest degree of national security classification that may be applicable to any of the materials to be examined; and

(iii) The Archivist has determined that the heads of agencies having subject matter interest in the material do not object to the granting of access to the materials; and

(iv) The requester has signed a statement, which declares that the requester will not publish, disclose, or otherwise compromise the classified material to be examined and that the requester has been made aware of Federal criminal statutes which prohibit the compromise or disclosure of this information.

(b) The Archivist will restrict access to any portion of materials determined to relate to abuses of governmental power when the release of those portions would constitute a clearly unwarranted invasion of personal privacy or constitute libel of a living person: *Provided,* That if material related to an abuse of governmental power refers to, involves or incorporates such personal information, the Archivist will make available such personal information, or portions thereof, if such personal information, or portions thereof, is essential to an understanding of the abuses of governmental power.

### § 1275.52 Restriction of materials of general historical significance unrelated to abuses of governmental power.

(a) The Archivist will restrict access to materials determined during the processing period to be of general historical significance, but not related to abuses of governmental power, under one or more of the circumstances specified in § 1275.50(a).

(b) The Archivist will restrict access to materials of general historical significance, but not related to abuses of governmental power, when the release of these materials would:

(1) Disclose trade secrets and commercial or financial information obtained from a person and privileged or confidential; or

(2) Constitute a clearly unwarranted invasion of personal privacy or constitute libel of a living person; or

(3) Disclose investigatory materials compiled for law enforcement purposes,

but only when the disclosure of such records would:

(i) Interfere with enforcement proceedings;

(ii) Deprive a person of a right to a fair trial or an impartial adjudication;

(iii) Constitute an unwarranted invasion of personal privacy;

(iv) Disclose the identity of a confidential source, and in the case of a record compiled by a criminal law enforcement authority in the course of a criminal investigation or by an agency conducting a lawful national security intelligence investigation, confidential information furnished only by the confidential source;

(v) Disclose investigative techniques and procedures; or

(vi) Endanger the life or physical safety of law enforcement personnel.

### § 1275.54 Periodic review of restrictions.

The Archivist periodically will assign archivists to review materials placed under restriction by § 1275.50 or § 1275.52 and to make available for public access those materials which, with the passage of time or other circumstances, no longer require restriction. If the archivists are unable to determine whether certain materials should remain restricted, the archivists shall submit the pertinent materials, or representative examples of them, to the Senior Archival Panel described in § 1275.44(d), which shall then have the responsibility for determining if the materials should remain restricted. The Senior Archival Panel may seek the recommendations of the Presidential Materials Review Board, in the manner prescribed in paragraph (e) and (h) of § 1275.46, in making its determination. Before opening previously restricted materials, the Archivist will comply with the notice requirements of § 1275.42(b).

[51 FR 7230, Feb. 28, 1986; 51 FR 8671, Mar. 13, 1986]

### § 1275.56 Appeal of restrictions.

Upon petition of any researcher who claims in writing to the Archivist that the restriction of specified materials is inappropriate and should be removed, the archivists shall submit the pertinent materials, or representative examples of them, to the Presidential Materials Review Board described in § 1275.46(f). The Board shall review the restricted materials, and consult with interested Federal agencies as necessary. To the extent these consultations require the transfer of copies of materials to Federal officials outside the National Archives and Records Administration, the Board shall comply with the requirements of §§ 1275.26 and 1275.32. As necessary and practicable, the Board shall also seek the views of any person, including former President Nixon, whose rights or privileges might be adversely affected by a decision to open the materials. The Board shall prepare a final written decision, including dissenting and concurring opinions, as to the continued restriction of all or part of the pertinent materials. The Board's decision shall be the final administrative determination. The Archivist will notify the petitioner and other interested persons of the final administrative determination within 60 calendar days following receipt of such petition. If the Board's decision is to open previously restricted materials, the Archivist will comply with the notice requirements of § 1275.42(b).

[51 FR 7230, Feb. 28, 1986, as amended at 61 FR 17846, Apr. 23, 1996]

### § 1275.58 Deletion of restricted portions.

The Archivist will provide a requester any reasonably segregable portions of otherwise restricted materials after the deletion of the portions which are restricted under this § 1275.50 or § 1275.52.

### § 1275.60 Requests for declassification.

Challenges to the classification and requests for the declassification of national security classified materials shall be governed by the provisions of 36 CFR part 1254 of this chapter, as that may be amended from time to time.

### § 1275.62 Reference room locations, hours, and rules.

The Archivist shall, from time to time, separately prescribe the precise location or locations where the materials shall be available for public reference, and the hours of operation and

rules governing the conduct of researchers using such facilities. This information may be obtained by writing to: Office of Presidential Libraries (NL), The National Archives, Washington, DC 20408.

### § 1275.64 Reproduction of tape recordings of Presidential conversations.

(a) To ensure the preservation of original tape recordings of conversations which were recorded or caused to be recorded by any officer or employee of the Federal Government and which:

(1) Involve former President Richard M. Nixon or other individuals who, at the time of the conversation, were employed by the Federal Government; and

(2) Were recorded in the White House or in the office of the President in the Executive Office Buildings located in Washington, DC; Camp David, MD; Key Biscayne, FL; or San Clemente, CA; and

(3) Were recorded during the period beginning January 20, 1969, and ending August 9, 1974, the Archivist will produce duplicate copies of such tape recordings in his custody for public and official reference use. The original tape recordings shall not be available for public access.

(b) Since the original tape recordings may contain information which is subject to restriction in accordance with § 1275.50 or § 1275.52, the archivists shall review the tapes and delete restricted portions from copies for public and official reference use.

(c) Researchers may listen to reference copies of the tape recordings described in paragraph (a) of this section in a National Archives building in the Washington, DC area and at other reference locations established by the Archivist in accordance with § 1275.62.

(d) The reproduction for members of the public of the reference copies of the available tape recordings described in paragraph (a) of this section will be permitted as follows: Copies of tape recordings will be made available following the public release of the tape segments contemplated in § 1275.42(a). Effective as of April 20, 2001, NARA will allow members of the public to obtain copies of all tapes that have been made available to the public by that date and that subsequently become available as they are released. Such copying will be controlled by NARA or its designated contractor. The fees for the reproduction of the tape recordings under this section shall be those prescribed in the schedule set forth in part 1258 of this chapter.

(e) The Archivist shall produce and maintain a master preservation copy of the original tape recordings for preservation purposes. The Archivist shall ensure that the master preservation copy, like the portions of the original tape recordings retained by the Archivist, does not contain those segments of the tape recordings which have been identified as private or personal and which have been transferred to the Nixon estate in accordance with § 1275.48.

[51 FR 7230, Feb. 28, 1986, as amended at 61 FR 17846, Apr. 23, 1996; 64 FR 56678, Oct. 21, 1999; 67 FR 44766, July 5, 2002]

### § 1275.66 Reproduction and authentication of other materials.

(a) Copying of materials, including tape recordings described in § 1275.64, may be done by NARA, by a contractor designated by NARA, or by researchers using self-service copiers or copying equipment.

(b) The Archivist may authenticate and attest copies of materials when necessary for the purpose of the research.

(c) The fees for reproduction and authentication of materials under this section shall be those prescribed in the schedule set forth in part 1258 of this chapter or pertinent successor regulation, as that schedule is amended from time to time.

[51 FR 7230, Feb. 28, 1986, as amended at 61 FR 17846, Apr. 23, 1996; 67 FR 44766, July 5, 2002]

### § 1275.68 Amendment of regulations.

The Archivist may from time to time amend the regulations of this subpart D in accordance with the applicable law concerning such amendments.

### § 1275.70 Freedom of information requests.

(a) The Archivist will process Freedom of Information Act requests for access to only those materials within the Presidential historical materials

which are identifiable by an archivist as records of an agency as defined in §1275.16(f). The Archivist will process these requests in accordance with the Freedom of Information regulations set forth in §1254.30 of this chapter or pertinent successor regulations.

(b) In order to allow NARA archivists to devote as much time and effort as possible to the processing of materials for general public access, the Archivist will not process those Freedom of Information requests where the requester can reasonably obtain the same materials through a request directed to an agency (as defined in §1275.16(f)), unless the requester demonstrates that he or she has unsuccessfully sought access from that agency or its successor in law or function.

[51 FR 7230, Feb. 28, 1986, as amended at 61 FR 17846, Apr. 23, 1996]

## APPENDIX A TO PART 1275—SETTLEMENT AGREEMENT

Settlement Agreement filed April 12, 1996, in *Stanley I. Kutler and Public Citizen* v. *John W. Carlin, Archivist of the United States, and William E. Griffin and John H. Taylor, Co-executors of Richard M. Nixon's Estate, Civil Action No. 92–0662–NHJ (D.D.C.) (Johnson, J.).* By letter dated April 17, 2001, NARA and the Nixon estate agreed to waive paragraph 11 of this Settlement Agreement, such that the delay on public copying until January 1, 2003, of tapes not made publicly available before April 12, 1996, shall no longer apply. This change is reflected in 36 CFR 1275.64.

### *Settlement Agreement*

This Settlement Agreement (''Agreement'') is made by and entered into among plaintiffs Stanley I. Kutler and Public Citizen; defendant/cross-claim defendant John W. Carlin, in his official capacity as Archivist of the United States; and defendant-intervenors/cross-claimants John H. Taylor and William E. Griffin, co-executors of the estate of Richard M. Nixon (''the Nixon estate''), in the above-entitled action by and through the parties' undersigned attorneys.

It is hereby agreed, by and among the parties, appearing through their undersigned attorneys, that this action is partially settled on the following terms:

### TERMS OF AGREEMENT

1(a). As soon as practicable, the National Archives and Records Administration (''the Archives'') will publicly release the segments of tape recordings made during the Presidency of Richard M. Nixon (''tape recordings'' or ''tapes'') identified by the Archives as relating to ''abuses of governmental power,'' as defined by 36 CFR Part 1275, along with the corresponding portions of the tape log and any other finding aid. The date of that release, which is expected to be on or about November 15, 1996, shall be determined in the following manner.

(b). No later than April 15, 1996, the Archives shall deliver to an agent of the Nixon estate a copy of the approximately 201 hours of abuses of governmental power tape segments that it proposes to release, together with the corresponding portions of the tape log and any other finding aid, for review by the Nixon estate to determine whether it intends to object to the release. The Archives agrees to provide a period of orientation to the designated Nixon estate agent with respect to the review of the abuses of governmental power tape segments and to be available to respond to questions thereafter.

(c). In place of the right to make all other objections with respect to the tape recordings that the Archives has designated as abuses of governmental power materials, the Nixon estate agrees that it may object to their release only on the ground that such designation by the Archives is clearly inconsistent with the term ''abuses of governmental power'' as used in section 104(a)(1) of the Presidential Recordings and Materials Preservation Act of 1974 (''the Act''), 44 U.S.C. §2111 note, and defined in 36 CFR 1275.16(c), as qualified by 36 CFR 1275.50(b). Any such objection shall be in writing and may not be based on isolated instances of alleged failure by the Archives to apply the appropriate review standard, but only on a pattern of misapplication of the requirements of the Act and its implementing regulations. Further, any such objection must be accompanied by specific examples of alleged review errors and contain sufficient information to enable the review panel described in subparagraph 1(e) below to locate those examples readily. Nothing in this paragraph shall preclude the Nixon estate and the Archives from having informal discussions regarding the appropriate treatment of any of the abuses of governmental power tape segments.

(d). The Nixon estate shall have until October 1, 1996, to submit any objection in accordance with subparagraph 1(c) above. If no such objection is filed, the Archives shall proceed to issue a notice of proposed release pursuant to 36 CFR 1275.42 as soon as possible, but no later than October 15, 1996.

(e). If an objection is made, the matter shall be immediately referred to a panel of the following three Presidential Library archivists: David Alsobrook, Frances Seeber, and Claudia Anderson. If any of these three persons is unable to serve, the Archivist shall appoint a substitute who is acceptable to the other parties.

(f). The panel shall have such access to the tapes as it deems necessary to make its decision. The decision of the panel shall be either that the Nixon estate's objection is sustained or that it is rejected. The decision shall include a brief statement of the panel's reasons, but it need not include an item-by-item determination. In deciding whether the designation by the Archives of the material proposed to be released is clearly inconsistent with the definition of ''abuses of governmental power,'' the panel shall consider whether the release would seriously injure legitimate interests of identifiable individuals, whether the errors suggest a pattern of misinterpretation, and any other factor that bears on the issue of whether the Archives' designation of material as relating to abuses of governmental power was reasonable, considered as a whole. The decision of the panel shall be made within sixty (60) days of the date of the objection. However, if the panel determines that exceptional circumstances interfere with its ability to meet this deadline, the panel shall have up to an additional sixty (60) days to make its decision. The Archives shall notify the other parties of the need for an extension and briefly describe the reasons therefor. The panel's decision shall be final and binding on all parties, and no party may exercise any right to appeal to any person, board, or court that might otherwise be available. Nothing contained in this Agreement shall preclude the panel from advising the Archives of any particular processing errors that it believes may have been made, but the Archivist shall make the final determination as to whether to accept such advice.

(g). If the objection of the Nixon estate is sustained, the Archives shall re-review the tapes sufficiently to address the concerns raised by whatever aspect of the objection is sustained. At the conclusion of such re-review, the same process of review, first by the Nixon estate and then by the panel in the event of further objection, shall be repeated for those tape segments concerning the subject matter of the sustained objection prior to any release of tape recordings designated as relating to abuses of governmental power.

(h). The Nixon estate agrees to inform the Archives and plaintiffs whether it intends to file objections as soon as it has made its decision. If there is an objection by the Nixon estate and it is overruled, the FEDERAL REGISTER notice shall be published within ten (10) days of the date of the panel's decision.

(i). If, following the FEDERAL REGISTER notice, no objection by other individuals to a release is received within the time provided by law, the Archives shall release the tape recordings within ten (10) days after such time has expired. If objections are received, they shall be promptly considered by the Archives and shall be decided as soon thereafter as practical. Any materials as to which an objection to release has been timely filed shall not be released until such objection has been resolved pursuant to 36 CFR 1275.44. All materials not objected to shall be released no later than thirty (30) days after the time for objections has expired, provided that the Archives may withhold any additional conversation to which no objection has been made, pending final resolution of an objection to another conversation, if (i) such additional conversation is in close proximity on the tapes to the objected-to conversation and it would be burdensome for the Archives to separate out the releasable and objected-to portions, or (ii) the subjects of the releasable and the objected-to conversations are closely related to one another and the Archives determines that it might be misleading or might unfairly prejudice a living individual to release only one conversation. Any release under this Agreement shall include the corresponding portions of the tape log and any other finding aid.

(j). The Archives shall send to plaintiff Kutler, to arrive no later than the day that the release of the tapes occurs, a copy of the portions of the tape log and any other finding aid that correspond to the tapes being released. The Archives shall also make suitable arrangements for plaintiff Kutler to listen to such tapes on the date of their release, and/or on such other subsequent business days as plaintiff Kutler shall designate.

2(a). Although the Agreement provides that the Archives will identify and return to the Nixon estate a copy of any private or personal materials identified on the tapes, the parties have been unable to reach agreement regarding the Archivist's retention and maintenance of the original tape recordings in their entirety, including those segments deemed to be private or personal, along with a master preservation copy. The government's position is that it is complying with the Act by retaining the original tapes and a master preservation copy, including those portions containing private or personal conversations. The Nixon estate's position, with which plaintiffs agree, is that the family has statutory, constitutional, and other rights that prevent the Archives from retaining private or personal materials, on both the original tapes and all copies.

(b). The parties have agreed to litigate the issue described in subparagraph 2(a) above, including the validity of 36 CFR 1275.48(a) and 1275.64(e) as proposed for amendment. The parties further agree that the Court shall retain jurisdiction of that issue, as provided in paragraph 14 below, and that the right to litigate this issue includes the right to seek review in the United States Court of Appeals for the District of Columbia Circuit and the United States Supreme Court. If there is litigation between the Nixon estate and the Archivist over the issue described in subparagraph 2(a) above, the plaintiffs shall

support the Nixon estate in any such litigation by filing a brief supporting the estate's position in District Court. The parties agree to make all reasonable efforts to expedite resolution of this issue.

(c). This Agreement and all discussions, negotiations and exchanges of information leading to it shall be entirely without prejudice to any positions the parties may take in the event of such litigation. Nothing in this Agreement, in any discussions leading to it, or in any information or materials exchanged by the parties as part of the mediation may be relied on or disclosed by any party to support or rebut the position of any party with respect to the treatment of private or personal materials on the original tapes. Nothing in this subparagraph prevents any party from expressing its understanding as to the meaning and effect of the legal position of another party.

3. The Archives will provide to the Nixon estate any additional private or personal materials at approximately the time that the Archives proposes each segment identified in paragraphs 4 and 5 below for public release. Any additional copies of that material (other than on a master preservation copy, the status of which will be determined in accordance with the resolution of the issue as described in subparagraph 2(a) above), will be destroyed by appropriate method, with appropriate means of verification.

4(a). The second group of tapes to be processed for release is the approximately 278 hours recorded in the Cabinet Room. The projected date for publishing a notice of proposed opening of tapes in that group is August 1, 1997. The Archives will make the Cabinet Room tapes proposed for release available to the Nixon estate in no fewer than four (4) segments. The process by which those tapes will be reviewed by the Nixon estate, and the objections handled by the Archives, is set forth in the following subparagraphs of this paragraph 4.

(b). The Nixon estate agrees to review each segment as it is received and promptly to call to the attention of the Archives any concerns that it may have. The Archives and the Nixon estate agree to attempt to work out their differences informally in order to minimize any objections to a proposed release. To facilitate informal consultation between the Nixon estate and the Archives concerning the tape review, the Archivist shall designate a panel member identified in subparagraph 1(e) above who will serve as a contact with the Nixon estate and assure access to information relating to Presidential libraries practices and procedures that may arise in the course of the tape review. The designated individual will be responsible for assuring that the Nixon estate has access to the appropriate person to answer its concerns. The Nixon estate may communicate with the designated individual orally or in writing. If the Archives agrees with the Nixon estate that any portion of a segment that has been sent to the Nixon estate as a proposed release should not be released, the Archives shall assure that there is appropriate documentation to reflect that change.

(c). The Nixon estate will have a period of at least six (6) months in which to review all of the Cabinet Room tapes, beginning on the date the Archives makes the first installment of such tapes available to the estate for review (but in no event will the six (6) months begin earlier than November 15, 1996). During the review of the Cabinet Room tapes, the Nixon estate will employ an agent or agents who will spend an average of at least thirty two (32) hours a week (total) in actual review of the tapes. The Nixon estate may request from the Archives an extension of the six-month review period, which the Archives shall grant if good cause is shown.

(d). If, during its review, the Nixon estate becomes aware that there are materials proposed for release that it believes should not be heard even by individuals on the registry list, it will promptly advise the Archives of any such materials so that they can be reviewed and/or segregated by the Archives before any other individual is permitted to listen to them. The Nixon estate will cooperate with the Archives so that the required FEDERAL REGISTER notice is published as soon as possible, but in no event shall such notice be provided later than ten (10) days after the time the Nixon estate completes its review. Final objections from the Nixon estate to the release of portions of the tapes shall be filed in accordance with 36 CFR Part 1275 no later than the date for filing objections by other persons. Thereafter, subject to paragraph 7 below, the provisions of subparagraphs 1(i) and 1(j) above will apply.

5(a). The remaining tapes, consisting of approximately 2338 hours, shall be processed for release in five (5) segments. Because the precise number of hours of tapes for each month cannot readily be determined, the parties have agreed to divide the releases into the segments set forth below. The Archives will begin processing (which includes, but is not limited to, tape review, preparing tapes for declassification review, tape editing and production of finding aids) each segment before processing of the preceding segment is concluded. Processing of the tapes in each segment is projected to take from about fifteen (15) to about twenty three (23) months. The approximate number of hours of tapes to be reviewed in each segment is set forth in parentheses in the following listing of the segments. The projected number of months between the completion of the Archives' processing of the immediately preceding segment and the completion of the Archives' processing of each listed segment is set forth in brackets.

1. February 1971–July 1971 (437 hours) [8 months]

2. August 1971–December 1971 (405 hours) [7 months]

3. January 1972–June 1972 (440 hours) [7 months]

4. July 1972–October 1972 (410 hours) [6 months]

5. November 1972–July 1973 (646 hours) [10 months]

(b). The time estimates in this Agreement are not enforceable as such, but the parties agree to have the Court retain jurisdiction to consider requests that it enter a binding order setting a schedule for the Archives to complete the processing of the tapes. No party may seek such an order unless that party first provides twenty (20) days' written notice to the other parties of that party's intention to seek such an order. Further, no party may seek such an order except on the ground that the Archives has unreasonably failed to meet the estimates contained herein by a substantial amount. The type of proof that will demonstrate reasonableness on the part of the Archives in this regard may include, but will not necessarily be limited to, a showing that the Archives is reasonably allocating its resources among its various programs and activities in the event that it experiences a shortage of resources, including any occasioned by court order.

(c). Portions of each segment processed by the Archives shall be provided to the Nixon estate when the processing of each month of tape recorded material is completed, unless there are a very few hours for two (2) or more months, which may then be combined into a single unit. During its review of the chronological tape segments, the Nixon estate will employ an agent or agents who will spend an average of at least thirty two (32) hours a week (total) in actual review of the tapes, forty eight (48) weeks of the year. As its review of the tapes proceeds, the Nixon estate shall provide a written report of its progress to the Archives and the plaintiffs on a bimonthly basis. The report shall include the number of hours worked in each week, the number of hours of tapes reviewed in each week, and the Nixon estate's projected completion date for review of the segment currently under review. The provisions of subparagraphs 4(b) and 4(d) above shall apply to the review, objections, and releases with respect to the chronological tape segments, subject to paragraph 7 below.

(d). If one of the other parties to this Agreement determines that the Nixon estate's review is not being conducted diligently or in good faith, or that the estate's estimated completion date(s) of one or more segments is unreasonable, that party may petition the Archivist to establish an earlier date(s) for the completion of the review of that segment and/or of future segments. Any such date(s) established by the Archivist shall provide the Nixon estate with a reasonable opportunity to protect and assert its interests without unduly delaying the release of the tapes, and shall be based upon consideration of the progress of the Archives' review and its scheduled completion date(s); the progress to date of the estate's review; and the time reasonably necessary to complete the estate's review and to formulate and present any objections. The Archives may also propose earlier dates for the completion of the review by the Nixon estate on the basis provided for in this subparagraph. If a proposal for an earlier date is made, the Nixon estate will have a reasonable opportunity to respond.

6. Once the Archives has completed processing the approximately 2338 hours of tapes discussed in paragraph 5 above, and has made corresponding releases, the Archives shall identify any additional copies of partial tape segments in its possession. If the Archives determines that some or all of such additional partial tape segments are duplicative of any tape recordings that it has already processed, the Archives may dispose of the duplicative tape segments, following notification to the parties, subject to paragraph 3 above. To the extent that such partial tape segments are not duplicative of the tape recordings already processed, the Archives shall promptly process such non-duplicative portions and shall treat any portions determined to be private or personal consistently with the resolution of the issue to be litigated as described in paragraph 2 above.

7(a). After completion of the procedures described in paragraph 4 above, the Cabinet Room tapes that are found to be releasable under paragraph 4 above may be released if either there has been a final decision by the district court on the issue to be litigated as described in subparagraph 2(a) above, or the release is scheduled after April 1, 1998, whichever of these two events happens sooner.

(b). After completion of the procedures described in paragraph 5 above, the tapes described in paragraph 5(a) above that are found to be releasable may be released if either there has been a final judgment by the district court, which is not subject to further review by appeal or certiorari, with regard to the issue to be litigated as described in subparagraph 2(a) above, or there has been a final decision by the United States Court of Appeals for the District of Columbia Circuit on this issue, or the release is scheduled to take place after November 1, 1999, whichever of these three events happens sooner.

(c). As used in subparagraphs 7(a) and (b) above, the term ''final decision'' means a decision not subject to reconsideration under Rule 59 of the Federal Rules of Civil Procedure, or Rules 35 or 40 of the Federal Rules of Appellate Procedure, respectively.

8. The Nixon estate may, at any time, elect to use the procedures in paragraph 1 above with respect to any tape segment in place of the provisions of paragraphs 4(b) and (d) and 5(c) above, with the following substitution: The standard under which objections shall be made, and under which the panel shall decide their merits, is whether the release taken as a whole is plainly inconsistent with the requirements of the Act and its implementing regulations. Provided, however, that once the Nixon estate elects to use the procedures in paragraph 1 above in place of the provisions in paragraphs 4(b) and (d) and 5(c) above, it cannot subsequently revert back to the formal objection process set forth in 36 CFR Part 1275 for that tape segment.

9. Within thirty (30) days of the Court's entry of an order as described in paragraph 14 below, the Archivist shall designate a particular person who shall be responsible for responding to reasonable inquiries from the plaintiffs on the status of the releases and objections. Such designation may be changed at any time at the Archivist's discretion by a notice to plaintiffs through their counsel.

10. If the Archives appoints a Senior Archival Panel as defined in 36 CFR 1275.46(d) and (e), no party to the Agreement may object to the appointment of such a panel on the ground that the suggestion to appoint such a panel was originated by an individual other than the processing archivists assigned to the Archives' Nixon Presidential Materials Staff.

11. The Archives will allow members of the public to obtain copies of publicly accessible portions of the tapes after the releases described in paragraph 5 above, are completed; provided, however, that if the releases described in paragraph 5 above are not completed by December 31, 1999, the Archives will allow members of the public to obtain copies only of the abuses of governmental power tapes, together with any other tapes publicly released as of the date of the filing of this Agreement with the Court, beginning January 1, 2000. Further provided, that if the releases described in paragraph 5 above are not completed by December 31, 2002, the Archives will, beginning January 1, 2003, allow members of the public to obtain copies of all tapes that have been made available to the public by that date and tapes that subsequently become available, as they are released.

12(a). Promptly after the Court enters the Order provided for in paragraph 14 below, plaintiff Kutler will withdraw his request under the Freedom of Information Act, 5 U.S.C. 552, for any and all tape logs and other finding aids, which is pending in *Kutler* v. *Carlin, et al.*, Civ. A. No. 92–0661–NHJ (D.D.C.). In all other respects, plaintiff Kutler's request in that action shall be unaffected by this Agreement.

(b). Nothing in this Agreement shall affect the processing by the Archives of any dictabelts, which are a collection of recordings of former President Nixon and other White House staff members dictating memoranda, correspondence and speech drafts, that are included in the materials that are subject to the Act.

13. Pursuant to Rule 315 of this Court, the plaintiffs and the defendant shall attempt to resolve the plaintiffs' claim for attorneys' fees and expenses and shall advise the Court no later than forty-five (45) days after this Court has entered the Order provided for in paragraph 14 below on whether they have been able to resolve the issue of attorneys' fees and expenses. If no resolution has been reached, they will, at that time, recommend a schedule to the Court to resolve such claim.

14. The parties agree to the dissolution of the preliminary injunction entered on August 9, 1993, and dismissal with prejudice of this action, including all claims and cross-claims, except for the issue to be litigated as described in subparagraph 2(a) above, and any fees and expenses claimed pursuant to paragraph 13 above, by filing the attached Joint Motion to Vacate Preliminary Injunction and to Dismiss Claims, and the attached Consent Order. The parties agree that the Court shall retain jurisdiction to: (a) Consider the entry of an order in accordance with the terms of paragraph 5 above; (b) resolve the issue to be litigated as described in subparagraph 2(a) above; (c) determine any fees and expenses claimed pursuant to paragraph 13 above; and (d) for the purpose of enforcing the terms of this Agreement. The parties further agree that such jurisdiction, except with respect to the issue described in paragraph 2 above, will be retained only until the later of the implementation of paragraph 11 above or the completion of the releases called for in paragraph 5 above. Plaintiffs and the Nixon estate further agree that they will not challenge any regulations issued by the Archives which implement and are consistent with this Agreement.

15. The terms of this Agreement may not be altered except with the written consent of the parties. Nothing in this Agreement constitutes an admission of liability or wrongdoing on the part of any party.

Executed this 12th day of April, 1996.

For Plaintiffs Stanley I. Kutler and Public Citizen:

Alan B. Morrison,

(*D.C. Bar No. 073114*), Public Citizen Litigation Group, 1600 20th Street NW., Washington, DC 20009, (202) 588–1000.

For Defendant John W. Carlin:

Anne L. Weismann,

(*D.C. Bar No. 298190*)

Judry L. Subar,

(*D.C. Bar No. 347518*)

Alina S. Kofsky,

(*D.C. Bar No. 419093*), Department of Justice, Federal Programs Branch, Civil Division, 901 E Street NW., Room 1010, Washington, DC 20530, (202) 514–4523.

For Defendant-Intervenors John H. Taylor and William E. Griffin:

Herbert J. Miller,

(*D.C. Bar No. 026120*)

R. Stan Mortenson,

(*D.C. Bar No. 114678*)

Scott L. Nelson,

(*D.C. Bar No. 413548*)

Ellen Fels Berkman,

(*D.C. Bar No. 433310*)

Miller, Cassidy, Larroca & Lewin,

2555 M Street, NW., Washington, DC 20037, (202) 293–6400.

[61 FR 17846, Apr. 23, 1996, as amended at 67 FR 44766, July 5, 2002]

# SUBCHAPTER G—NARA FACILITIES

## PART 1280—USE OF NARA FACILITIES

### Subpart A—What Are the General Rules of Conduct on NARA Property?

General Information on Using NARA Facilities

Sec.
1280.1 What is the purpose of this part?
1280.2 What property is under the control of the Archivist of the United States?
1280.4 Can children under the age of 14 use NARA facilities?
1280.6 May I bring a seeing-eye dog or other assistance animal?
1280.8 Will my belongings be searched?
1280.10 Are there special rules for driving on NARA property?
1280.12 Is parking available?
1280.14 May I use the shuttle bus to travel to the National Archives at College Park or to the National Archives Building in Washington, DC?
1280.16 Are there additional rules posted?

Prohibited Activities

1280.18 May I bring guns or other weapons onto NARA property?
1280.20 What is your policy on illegal drugs and alcohol?
1280.22 Is gambling allowed on NARA property?
1280.24 Is smoking allowed on NARA property?
1280.26 May I pass out fliers on NARA property?
1280.28 Where can I eat and drink on NARA property?
1280.30 Are soliciting, vending, and debt collection allowed on NARA property?
1280.32 What other behavior is not permitted?
1280.34 What are the types of corrective action NARA imposes for prohibited behavior?
1280.36 May I file an appeal if I am banned from NARA facilities?

### Subpart B—What Are the Rules for Filming, Photographing, or Videotaping on NARA Property?

1280.40 Definitions.
1280.42 When do the rules in this subpart apply?
1280.44 May I film, photograph, or videotape on NARA property for commercial purposes?
1280.46 What are the rules for filming, photographing, or videotaping on NARA property for personal use?
1280.48 How do I apply to film, photograph, or videotape on NARA property for news purposes?
1280.50 What will I be allowed to film, photograph, or videotape for news purposes?
1280.52 What are the rules for filming, photographing, or videotaping on NARA property for news purposes?

### Subpart C—What Are the Additional Rules for Using NARA Facilities in the Washington, DC, Area?

1280.60 Where do I enter the National Archives Building in Washington, DC?
1280.62 When are the exhibit areas in the National Archives Building open?
1280.64 What entrance should I use to enter the National Archives at College Park?
1280.66 May I use the National Archives Library?
1280.68 May I use the cafeteria at the National Archives at College Park?

### Subpart D—What Rules Apply to Use NARA Public Areas in the Washington, DC, Area?

1280.70 When does NARA allow non-NARA groups to use the public areas of NARA property?
1280.71 What are the general rules for using NARA property in the Washington, DC, area?
1280.72 What additional rules apply for a NARA approved event?
1280.74 What spaces in the National Archives Building are available for use by non-NARA groups and organizations?
1280.76 When are the public areas available for private events in the National Archives Building?
1280.78 Does NARA charge fees for the use of public areas in the National Archives Building?
1280.80 How do I request to use NARA public areas in the National Archives Building?
1280.82 How will NARA handle my request to use public areas in the National Archives Building?
1280.84 May I ask to use the Rotunda?
1280.85 What space in the National Archives at College Park is available for use by non-NARA groups and organizations?
1280.86 When are the public areas available for events in the National Archives at College Park?
1280.87 Does NARA charge fees for the use of public areas in the National Archives at College Park?
1280.88 How do I request to use NARA public areas in the National Archives at College Park?

1280.89 How will NARA handle my request to use public areas in the National Archives at College Park?

### Subpart E—What Additional Rules Apply for Use of Facilities in Presidential Libraries?

1280.90 What are the rules of conduct while visiting the Presidential libraries?
1280.92 When are the Presidential library museums open to the public?
1280.94 When do Presidential libraries allow other groups to use their public areas for events?
1280.96 Supplemental rules.

### Subpart F—What Additional Rules Apply for Use of Public Areas at Regional Records Services Facilities?

1280.100 What are the rules of conduct at NARA regional records services facilities?
1280.102 When do NARA regional records services facilities allow other groups to use their public areas for events?

AUTHORITY: 44 U.S.C. 2102 notes, 2104(a), 2112, 2903

SOURCE: 65 FR 34978, June 1, 2000, unless otherwise noted.

## Subpart A—What Are the General Rules of Conduct on NARA Property?

GENERAL INFORMATION ON USING NARA FACILITIES

### § 1280.1 What is the purpose of this part?

(a) This part tells you what rules you must follow when you use property under the control of the Archivist of the United States (see § 1280.2 of this part).

(b) When you are using other NARA facilities, the General Services Administration (GSA) regulations, Conduct on Federal Property, at 41 CFR part 102–74, Subpart C, apply to you. These facilities are the NARA regional records services facilities, the Washington National Records Center in Suitland, MD, the National Personnel Records Center in St. Louis, MO, and the Office of the Federal Register in Washington, DC. The rules in §§ 1280.32(l), 1280.34 (a)(1) and (a)(2), and 1280.36 also apply to you. The rules in Subpart B of this part also apply to you if you wish to film, take photographs, or make videotapes. The rules in Subpart F of this part also apply to you if you wish to use the NARA-assigned conference rooms in those facilities.

(c) If you are using records in a NARA research room in a NARA facility, you must also follow the rules in 36 CFR part 1254. If you violate a rule or regulation in 36 CFR part 1254, you are subject to the types of corrective action set forth in that part, including revocation of research privileges.

(d) If you violate a rule or regulation in this part you are subject to, among other types of corrective action, removal and banning from the facility.

[65 FR 34978, June 1, 2000, as amended at 68 FR 53882, Sept. 15, 2003, 73 FR 36793, June 30, 2008]

### § 1280.2 What property is under the control of the Archivist of the United States?

The following property is under the control of the Archivist of the United States and is defined as ''NARA property'' in this part 1280:

(a) *The National Archives Building*. Property under the control of the Archivist includes:

(1) The Pennsylvania Avenue, NW, entrance between 7th and 9th Streets including the area within the retaining walls on either side of the entrance, inclusive of the statues, and the steps and ramps leading up to the entrance of the building;

(2) On the 7th Street, 9th Street, and Constitution Avenue, NW, sides of the building, all property between the National Archives Building and the curb line of the street, including the sidewalks and other grounds, the steps leading up to the Constitution Avenue entrance, the Constitution Avenue entrance, and the portico area between the steps and the Constitution Avenue entrance.

(3) The National Park Service controls the areas on the Pennsylvania Avenue side of the National Archives Building that are not under the control of the Archivist of the United States.

(b) *The National Archives at College Park*. Property under control of the Archivist includes approximately 37 acres bounded:

(1) On the west by Adelphi Road;

(2) On the north by the Potomac Electric Power Company right-of-way;

(3) On the east by Metzerott Road; and

(4) On the south by the University of Maryland.

(c) *The Presidential Libraries*. Property under control of the Archivist includes the Presidential Libraries and Museums that are listed in 36 CFR 1253.3.

(d) *The National Archives at Atlanta*. The National Archives at Atlanta in Morrow, Georgia, as specified in 36 CFR 1253.7(d).

(e) *The Federal Records Centers*. The Federal Records Centers in Ellenwood, Georgia, and Riverside, California, as specified in 36 CFR 1253.6 (d) and (l), respectively.

(f) *Additional Facilities*. As other properties come under the control of the Archivist of the United States, they will be listed in these regulations as soon as practicable.

[65 FR 34978, June 1, 2000, as amended at 71 FR 76166, Dec. 20, 2006; 72 FR 4432, Jan. 31, 2007; 75 FR 19557, Apr. 15, 2010]

### § 1280.4 What items are subject to inspection by NARA?

NARA may, at its discretion, inspect the personal property in the possession of any NARA contractor, employee, student intern, visitor, volunteer, or other person arriving on, working at, visiting, or departing from NARA property.

[71 FR 76167, Dec. 20, 2006]

### § 1280.6 Can children under the age of 14 use NARA facilities?

Children under the age of 14 will be admitted to NARA facilities only if they are accompanied by an adult who will supervise them at all times while on NARA property. The director of a NARA facility may authorize a lower age limit for admission of unaccompanied children to meet special circumstances (e.g., students who have been given permission to conduct research without adult supervision).

[65 FR 34978, June 1, 2000. Redesignated at 71 FR 76167, Dec. 20, 2006]

### § 1280.8 May I bring a seeing-eye dog or other assistance animal?

Yes, persons with disabilities may bring guide dogs or other animals used for guidance and assistance onto NARA property. You may not bring any other animals into a NARA facility except for official purposes.

[65 FR 34978, June 1, 2000. Redesignated at 71 FR 76167, Dec. 20, 2006]

### § 1280.10 Are there special rules for driving on NARA property?

(a) You must obey speed limits, posted signs, and other traffic laws, and park only in designated spaces.

(b) NARA will tow, at the owner's expense, any vehicle that is parked illegally. Except in emergencies, you may not park in spaces reserved for holders of NARA parking permits. If an emergency forces you to leave your vehicle in an illegal area, you must notify the security guards at that NARA facility as soon as possible. We will not tow your illegally parked car if you have notified a security guard of an emergency unless it is creating a hazard or blocking an entrance or an exit.

(c) We may deny any vehicle access to NARA property for public safety or security reasons.

### § 1280.12 Is parking available?

(a) *The National Archives Building*. There is no parking available for researchers or visitors to the National Archives Building. However, this building is easily accessible by bus or subway and there are several commercial parking lots located near the building.

(b) *The National Archives at College Park*. The National Archives at College Park has limited public parking space. The garage is open to the public on a first-come, first-served basis during the hours the research rooms are open. There is public bus service to this building. Individuals and groups visiting the National Archives at College Park are encouraged to use public transportation or car pool to get to the building as the parking lot is often full during our busiest hours.

(c) *Records services facilities*. Most records services facilities have onsite parking available for researchers. Parking at these facilities and at the

Washington National Records Center is governed by GSA regulations, Management of Buildings and Grounds, found at 41 CFR part 101–20. The National Archives at Philadelphia on Market Street (in Philadelphia) and the National Archives at New York City do not have onsite parking. However, there is ample parking in commercial parking garages near these facilities.

(d) *Presidential Libraries.* All of the Presidential Libraries have onsite parking for researchers and museum visitors. Some of the spaces are reserved for staff and for security reasons.

[65 FR 34978, June 1, 2000, as amended at 75 FR 19558, Apr. 15, 2010]

### § 1280.14 May I use the shuttle bus to travel to the National Archives at College Park or to the National Archives Building in Washington, DC?

The NARA shuttle, which travels concurrently each hour between the National Archives Building and the National Archives at College Park, is intended for NARA employees' use for official purposes. Other Government employees on official business or researchers may also use the shuttle if space is available. The shuttle operates Monday through Friday, excluding Federal holidays, 8:00 a.m. to 5:00 p.m.

[65 FR 34978, June 1, 2000; 65 FR 35840, June 6, 2000]

### § 1280.16 Are there additional rules posted?

Yes, there are additional rules posted on NARA property. You must, at all times while on NARA property, comply with official NARA signs and with the directions of the guards and NARA staff.

## PROHIBITED ACTIVITIES

### § 1280.18 May I bring guns or other weapons onto NARA property?

No, you may not bring firearms or other dangerous or deadly weapons either openly or concealed onto NARA property except for official business. You also may not bring explosives, or items intended to be used to fabricate an explosive or incendiary device, onto NARA property. State-issued concealed-carry permits are not valid on NARA property.

### § 1280.20 What is your policy on illegal drugs and alcohol?

You may not use or be in possession of illegal drugs on NARA property. You also may not enter NARA property while under the influence of illegal drugs or alcohol. Using alcoholic beverages on NARA property is prohibited except for occasions when the Archivist of the United States or his/her designee has granted an exemption in writing.

### § 1280.22 Is gambling allowed on NARA property?

(a) No, you may not participate in any type of gambling while on NARA property. This includes:

(1) Participating in games for money or other personal property;

(2) Operating gambling devices;

(3) Conducting a lottery or pool; or

(4) Selling or purchasing numbers tickets.

(b) This rule does not apply to licensed blind operators of vending facilities who are selling chances for any lottery set forth in a State law and conducted by an agency of a State as authorized by section 2(a)(5) of the Randolph-Sheppard Act (20 U.S.C. 107, *et seq.*)

### § 1280.24 Is smoking allowed on NARA property?

Smoking is not allowed inside any NARA facility.

### § 1280.26 May I pass out fliers on NARA property?

No, you may not distribute or post handbills, fliers, pamphlets or other materials on bulletin boards or elsewhere on NARA property, except in those spaces designated by NARA as public forums. This prohibition does not apply to displays or notices distributed as part of authorized Government activities or bulletin boards used by employees to post personal notices.

### § 1280.28 Where can I eat and drink on NARA property?

You may only eat and drink in designated areas in NARA facilities. Eating and drinking is prohibited in the

research, records storage, and museum areas unless specifically authorized by the Archivist or designee.

### § 1280.30 Are soliciting, vending, and debt collection allowed on NARA property?

(a) No, on NARA property you may not:

(1) Solicit for personal, charitable, or commercial causes;

(2) Sell any products;

(3) Display or distribute commercial advertising; or

(4) Collect private debts.

(b) If you are a NARA employee or contractor, you may participate in national or local drives for funds for welfare, health or other purposes that are authorized by the Office of Personnel Management and/or approved by NARA (e.g. the Combined Federal Campaign). Also, nothing in this section prohibits employees from activities permitted under the Standards of Ethical Conduct and Office of Government Ethics rules.

### § 1280.32 What other behavior is not permitted?

We reserve the right to remove anyone from NARA property who is:

(a) Stealing NARA property;

(b) Willfully damaging or destroying NARA property;

(c) Creating any hazard to persons or things;

(d) Throwing anything from or at a NARA building;

(e) Improperly disposing of rubbish.

(f) Acting in a disorderly fashion;

(g) Acting in a manner that creates a loud or unusual noise or a nuisance;

(h) Acting in a manner that unreasonably obstructs the usual use of NARA facilities:

(i) Acting in a manner that otherwise impedes or disrupts the performance of official duties by Government and contract employees;

(j) Acting in a manner that prevents the general public from obtaining NARA-provided services in a timely manner; or

(k) Loitering.

(l) Threatening directly (e.g., in-person communications or physical gestures) or indirectly (e.g., via regular mail, electronic mail, or phone) any NARA employee, visitor, volunteer, contractor, other building occupants, or property.

[65 FR 34978, June 1, 2000, as amended at 68 FR 53882, Sept. 15, 2003]

### § 1280.34 What are the types of corrective action NARA imposes for prohibited behavior?

(a) Individuals who violate the provisions of this part are subject to:

(1) Removal from the premises (removal for up to seven calendar days) and possible law enforcement notification;

(2) Banning from property owned or operated by NARA;

(3) Arrest for trespass; and

(4) Any additional types of corrective action prescribed by law.

(b) The regional administrator of the facility (or the director if so designated) has the authority to have the individual immediately removed and denied further access to the premises for up to seven calendar days. During this removal period, the Assistant Archivist for Administration renders a decision on whether the individual should be banned from specific or all NARA facilities permanently or temporarily (in up to one-year increments). Long-term banning under this part includes automatic revocation of research privileges, notwithstanding the time periods set forth in 36 CFR 1254.48 . Research privileges remain revoked until the ban is lifted, at which time an application for new privileges may be submitted.

(c) Upon written notification by the Assistant Archivist for Administration, individuals may be banned from all NARA facilities. All NARA facilities will be notified of the banning of individuals.

[68 FR 53882, Sept. 15, 2003, as amended at 73 FR 36793, June 30, 2008]

### § 1280.36 May I file an appeal if I am banned from NARA facilities?

Yes, within 30 calendar days of receiving such notification, an individual may appeal the decision in writing. In the request, the individual must state the reasons for the appeal and mail it to the Deputy Archivist of the United

States for reconsideration (address: National Archives and Records Administration (ND), 8601 Adelphi Road, College Park, MD 20740–6001). The Deputy Archivist has 30 calendar days from receipt of an appeal to make a decision to rescind, modify, or uphold the ban. If the ban is upheld, further requests by the affected individual will not be acted upon if received prior to the expiration of a period of one year from the date of the last request for reconsideration. After one year has passed, a further request for reconsideration will be considered, and the Deputy Archivist will decide, within 30 calendar days of receiving the request, whether the ban remains in place or is rescinded. Notice of the decision will be provided in writing to the affected individual.

[68 FR 53882, Sept. 15, 2003]

## Subpart B—What Are the Rules for Filming, Photographing, or Videotaping on NARA Property?

### § 1280.40 Definitions.

(a) *Filming, photographing, or videotaping for commercial purposes.* Any filming, photographing, or videotaping to promote commercial enterprises or commodities.

(b) *News filming, photographing, or videotaping.* Any filming, photographing, or videotaping done by a commercial or non-profit news organization that is intended for use in a television or radio news broadcast, newspaper, or periodical.

(c) *Personal use filming, photographing, or videotaping.* Any filming, photographing, or videotaping intended solely for personal use that will not be commercially distributed.

### § 1280.42 When do the rules in this subpart apply?

(a) These rules apply to anyone who is filming, photographing, or videotaping inside any NARA-run facility and while on NARA property.

(b) Filming, photographing, and videotaping on the grounds of any NARA regional records services facility, or on the grounds surrounding the Washington National Records Center are governed by GSA regulations, Management of Buildings and Grounds, found at 41 CFR part 101–20, and must be approved by a GSA official.

### § 1280.44 May I film, photograph, or videotape on NARA property for commercial purposes?

No, filming, photographing, and videotaping on NARA property for commercial purposes is prohibited.

### § 1280.46 What are the rules for filming, photographing, or videotaping on NARA property for personal use?

(a) You may film, photograph, or videotape outside a NARA facility so long as you do not impede vehicular or pedestrian traffic.

(b) You may film, photograph, or videotape inside a NARA facility during regular business hours in public areas, including research rooms and exhibition areas, under the following conditions:

(1) You may not use a flash or other supplemental lighting; and

(2) You may not use a tripod or similar equipment.

(c) You may not film, photograph, or videotape in any of the exhibit areas of the National Archives Building in Washington, DC, including the Rotunda where the Declaration of Independence, the Constitution, and the Bill of Rights are displayed.

[65 FR 34978, June 1, 2000, as amended at 73 FR 36793, June 30, 2008; 75 FR 3863, Jan. 25, 2010]

### § 1280.48 How do I apply to film, photograph, or videotape on NARA property for news purposes?

(a) If you wish to film, photograph, or videotape for news purposes at the National Archives Building (as delineated in § 1280.2(a)), the National Archives at College Park, or the Washington National Records Center, you must request permission from the NARA Public Affairs Officer, 700 Pennsylvania Avenue, NW., Washington, DC 20408–0001. See also § 1280.42(b) for additional permissions relating to the Washington National Records Center.

(b) If you wish to film, photograph, or videotape for news purposes at a Presidential library or at a regional records services facility, you must contact the director of the library (see 36

CFR 1253.3 for contact information) or regional records services facility (see 36 CFR 1253.6 for contact information) to request permission.

(c) Your request for permission to film, photograph, or videotape for news purposes must contain the following information:

(1) The name of the organization you are working for;

(2) Areas you wish to film, photograph, or videotape;

(3) Documents, if any, you wish to film;

(4) The purpose of the project you are working on;

(5) What you intend to do with the film, photograph, or videotape; and

(6) How long you will need to complete your work on NARA property.

(d) You must request permission at least one week in advance of your desired filming date. If you make a request within a shorter time period, we may not be able to accommodate your request.

(e) OMB control number 3095–0040 has been assigned to the information collection contained in this section.

(f) This section does not apply to you if you have permission to use your own microfilming equipment to film archival records and donated historical materials under the provisions of 36 CFR 1254.90 through 1254.110. You must follow the procedures in 36 CFR part 1254 for permission to film archival records and donated materials for research purposes or for microfilm publications.

[65 FR 34978, June 1, 2000, as amended at 36793, June 30, 2008]

### § 1280.50 What will I be allowed to film, photograph, or videotape for news purposes?

(a) NARA will permit you to film, photograph, or videotape sections of the interior or exterior of any NARA facility only for stories about:

(1) NARA programs;

(2) NARA exhibits;

(3) NARA holdings;

(4) NARA services;

(5) A former President;

(6) A researcher who has made or is making use of NARA holdings (provided that the researcher also approves your request); or

(7) Any other NARA-related activity approved by the appropriate NARA representative.

(b) NARA reserves the right to reject any request that does not meet the criteria set forth in 36 CFR 1280.50(a) and (c) or because of scheduling or staffing constraints.

(c) We will not grant you permission to film, photograph, or videotape if you intend to use the film, photographs, or videotape for commercial, partisan political, sectarian, or similar activities.

### § 1280.52 What are the rules for filming, photographing, or videotaping on NARA property for news purposes?

The following conditions and restrictions apply to anyone that has been granted permission to film, photograph, or videotape for news purposes under Subpart B:

(a) NARA may limit or prohibit use of artificial light in connection with the filming, photographing, or videotaping of documents for news purposes. You may not use any supplemental lighting devices while filming, photographing, or videotaping inside a NARA facility in the Washington, DC, area without the prior permission of the NARA Public Affairs Officer. If the Public Affairs Officer approves your use of artificial lighting in the Rotunda, NARA will use facsimiles in place of the Declaration of Independence, the Constitution, and the Bill of Rights. If NARA approves your use of high intensity lighting, NARA will cover or replace with facsimiles all other exhibited documents that fall within the boundaries of such illumination. You may not use any supplemental lighting devices at the Presidential Libraries and the regional records services facilities without permission from a NARA representative at that facility.

(b) On a case-by-case basis, the Public Affairs Officer or other appropriate NARA representative may grant you permission to film, photograph, or videotape in stack areas containing unclassified records.

(c) While filming, photographing, or videotaping, you are liable for injuries to people or property that result from your activities on NARA property.

(d) At all times while on NARA property, you must conduct your activities in accordance with all applicable NARA regulations contained in this part.

(e) Your filming, photographing, or videotaping activity may not impede people who are entering or exiting any NARA facility unless otherwise authorized by the facility's director, or by the NARA Public Affairs Officer for Washington, DC, area facilities.

(f) You must be accompanied by a NARA staff member when filming, photographing, or videotaping the interior of any NARA facility.

(g) NARA will approve your request to do press interviews of NARA personnel on NARA property only when such employees are being interviewed in connection with official business. Interviews with NARA staff and researchers may take place only in areas designated by the NARA Public Affairs Officer for Washington, DC, area facilities, or by the appropriate NARA representative at other NARA facilities.

(h) You may film and photograph documents only in those areas which the NARA Public Affairs Staff designates in the National Archives Building, the National Archives at College Park, or the Washington National Records Center or in those areas designated as appropriate by the staff liaison at other NARA facilities.

(i) We will limit your film and photography sessions to two hours.

(j) You may not state or imply that NARA approves of or will sponsor:

(1) Your activities or views; or

(2) The uses to which you put images depicting any NARA facility.

[65 FR 34978, June 1, 2000, as amended at 73 FR 36794, June 30, 2008]

## Subpart C—What Are the Additional Rules for Using NARA Facilities in the Washington, DC, Area?

### § 1280.60 Where do I enter the National Archives Building in Washington, DC?

(a) To conduct research or official business, you must enter the Pennsylvania Avenue entrance of the National Archives Building.

(b) To visit the exhibit areas of the National Archives Building, including the National Archives Experience and Rotunda, you must enter through the Constitution Avenue entrance.

[65 FR 34978, June 1, 2000, as amended at 71 FR 42060, July 25, 2006]

### § 1280.62 When are the exhibit areas in the National Archives Building open?

(a) The exhibit areas' hours of operation are posted at *http://www.archives.gov*. Last admission to the exhibit areas of the building will be no later than 30 minutes before the stated closing hour. The Archivist of the United States reserves the authority to close the exhibit areas to the public at any time for special events or other purposes. The building is closed on Thanksgiving and December 25.

[75 FR 71547, Nov. 24, 2010]

### § 1280.64 What entrance should I use to enter the National Archives at College Park?

You may enter the National Archives at College Park facility only through the main entrance on Adelphi Road. This entrance will be open to visitors during normal business hours described in 36 CFR 1253.2. Commercial deliveries must be made at the loading dock which is accessible only from Metzerott Road.

### § 1280.66 May I use the National Archives Library?

The National Archives Library facilities in the National Archives Building and in the National Archives at College Park are operated to meet the needs of researchers and NARA staff members. If you are not conducting research in archival materials at NARA, NARA Library staff will refer you to public libraries and other possible sources for such published materials.

### § 1280.68 May I use the cafeterias?

Yes, the Charters Café in the National Archives Building is normally open to the public Monday through

Friday, 10 a.m. to 4 p.m. and the cafeteria at the National Archives at College Park is open to the public from 8 a.m. to 4 p.m.

[73 FR 36794, June 30, 2008]

## Subpart D—What Rules Apply to Use NARA Public Areas in the Washington, DC, Area?

GENERAL

SOURCE: 73 FR 36794, June 30, 2008, unless otherwise noted.

### § 1280.70 When does NARA allow non-NARA groups to use the public areas of NARA property?

(a) The primary use of NARA property in the Washington, DC, area (the National Archives Building and the National Archives at College Park), including those areas open to the public, is the conduct of official NARA business, including public programs and other activities conducted in conjunction with government and non-government organizations and the Foundation for the National Archives (''Foundation''). In conducting official business, NARA and its partners use all of the public areas of the Washington, DC, area facilities. There are no public areas in the Washington National Records Center in Suitland, MD.

(b) NARA may permit, under the conditions described in this subpart, the occasional use of certain public areas by other Federal agencies, quasi-Federal agencies, and state, local, and tribal government organizations for official activities. NARA also permits the occasional, non-official use of its public areas by organizations when the activity relates to or furthers NARA's archival, records, or other programs.

### § 1280.71 What are the general rules for using NARA property in the Washington, DC, area?

In addition to the rules listed in Subparts A, B, and C of this part, you must adhere to the following rules when using NARA public spaces:

(a) All use must relate to or further the archival, records, or other activities of NARA. Examples of use that meet this standard include programs that promote research in or the dissemination and use of NARA holdings, including educational programs and materials, the preservation of NARA holdings or the historical records and documentary materials of other institutions, and the use and enjoyment of NARA exhibits.

(b) All use must be consistent with the public perception of NARA as an archival and research institution.

(c) When NARA cohosts an activity with the Foundation or other organizations, NARA must be identified as the cohost in all materials and publicity relating to the activity.

(d) When NARA has authorized your organization to use NARA property, you may not characterize your use of NARA property as an endorsement by NARA of your organization or its activities, or otherwise suggest an official relationship between NARA and your organization.

(e) You are not allowed to charge an admission fee or make any indirect assessment for admission, and you may not otherwise collect money at the event.

(f) You may not use NARA property or permission to use that property to advertise, promote, or sell commercial enterprises, products, or services, or for partisan political, sectarian, or similar purposes.

(g) You may not use NARA property if you or your organization or group engages in discriminatory practices proscribed by the Civil Rights Act of 1964, as amended.

(h) You must not misrepresent your identity to the public nor conduct any activities in a misleading or fraudulent manner.

(i) You must ensure that no Government property is destroyed, displaced, or damaged during your use of NARA public areas. You must take prompt action to replace, return, restore, repair or repay NARA for any damage caused to Government property during the use of NARA facilities.

### § 1280.72 What additional rules apply for a NARA approved event?

(a) Approved applicants must provide support people as needed to register guests, distribute approved literature, name tags, and other material.

(b) We must approve in advance any item that you plan to distribute or display during your use of NARA property, or any notice or advertisement that refers, directly or indirectly, to NARA, the Foundation for the National Archives, or the National Archives Trust Fund, or incorporates any of the seals described in 36 CFR 1200.2.

(c) We must approve in advance any vendor or caterer who will work in NARA facilities. You must comply with all NARA requirements for the use of food and drink at your event.

(d) No food or drink may be present or consumed in areas where original records or historical materials are displayed.

NATIONAL ARCHIVES BUILDING, WASHINGTON, DC

### § 1280.74 What spaces in the National Archives Building are available for use by non-NARA groups and organizations?

You may ask to use the following areas in the National Archives Building, Washington, DC:

| Area | Capacity |
|---|---|
| Rotunda Galleries | 250 persons. |
| William G. McGowan Theater | 290 persons. |
| Archivist's Reception Room | 125 persons. |
| Presidential Conference Rooms. | 20 to 70 persons. |

### § 1280.76 When are the public areas available for private events in the National Archives Building?

Most public areas are available for set-up and use on weekdays from 6 p.m. until 10:30 p.m. during the fall and winter seasons (day after Labor Day through March 14). The areas are available for set-up and use from 7:30 p.m. until 10:30 p.m. in the spring season (March 15 through Labor Day). The areas are not available during weekends or on Federal holidays. A NARA staff member must be present at all times when non-NARA groups use NARA spaces.

### § 1280.78 Does NARA charge fees for the use of public areas in the National Archives Building?

(a) NARA is authorized to charge fees for the occasional, non-official use of its public areas, as well as for services related to such use, including additional cleaning, security, and other staff services. NARA will either exercise this authority directly, or, for activities co-sponsored with the Foundation for the National Archives, as part of your group's arrangements with the Foundation.

(b) We will inform organizations interested in using public spaces in the National Archives Building in advance and in writing of the total estimated cost associated with using the public area of interest. Fees NARA charges are paid to the National Archives Trust Fund.

(c) Federal and quasi-Federal agencies, State, local, and tribal governmental institutions using public space for official government functions pay fees to the National Archives Trust Fund only for the costs for room rental, administrative fees, additional cleaning, security, and other staff services NARA provides.

[73 FR 36794, June 30, 2008, as amended at 78 FR 41305, July 10, 2013]

### § 1280.80 How do I request to use NARA public areas in the National Archives Building?

(a) Direct your request to use space to Special Events (Partnerships Division), National Archives and Records Administration, 700 Pennsylvania Avenue NW., Washington, DC 20408; or request by email to *specialevents@nara.gov*.

(b) You must submit requests, signed by an authorized official of your organization, to use NARA public areas at least 30 calendar days before the proposed event is to occur.

(c) OMB control number 3095–0043 has been assigned to the information collection contained in this section.

[73 FR 36794, June 30, 2008, as amended at 78 FR 41305, July 10, 2013]

### § 1280.82 How will NARA handle my request to use public areas in the National Archives Building?

(a) When you ask to use property in the National Archives Building, we review your request to:

(1) Ensure that it meets all of the provisions in this subpart;

(2) Determine if the public area you have requested is available on the date and time you have requested;

(3) Evaluate whether your proposed use is appropriate for the requested space; and

(4) Determine the costs of the event.

(b) When we have completed this review, we will notify you of the decision. We may ask for additional information before deciding whether or not to approve your event.

(c) NARA reserves the right to review, reject, or require changes in any material, activity, or caterer you intend to use for the event.

### § 1280.84 May I ask to use the Rotunda?

The Rotunda is primarily used for the public exhibition of the Charters of Freedom and other documents from NARA's holdings. NARA also uses the Rotunda for activities that further its Strategic Plan. Therefore, the use of the Rotunda for private events is not permitted. NARA may, upon application, permit other Federal agencies, quasi-Federal agencies, and State, local, and tribal governments to use the Rotunda for official functions, with NARA as a co-sponsor. Governmental groups that use the Rotunda for official functions must reimburse NARA for the cost of additional cleaning, security, and other staff services.

NATIONAL ARCHIVES AT COLLEGE PARK, MD

### § 1280.85 What space in the National Archives at College Park is available for use by non-NARA groups and organizations?

You may ask to use the following areas:

| Area | Capacity |
|---|---|
| Auditorium | 300. |
| Lecture Rooms | 30 to 70 persons (or up to 300 with all dividers removed). |

### § 1280.86 When are the public areas available for events in the National Archives at College Park?

Most areas are available for set-up and use from 8 a.m. until 9:30 p.m., Monday through Friday, and from 9 a.m. until 4:30 p.m. on Saturday. A NARA staff member must be present at all times when the public area is in use. If the space and staff are available, we may approve requests for events held before or after these hours and on Sunday.

### § 1280.87 Does NARA charge fees for the use of public areas in the National Archives at College Park?

NARA may charge a fee under 44 U.S.C. 2903(b) for the use of public areas in the National Archives at College Park. We inform organizations in advance and in writing of the total estimated cost of using the public areas. Federal and quasi-Federal agencies, State, local, and tribal governmental institutions using public space for official government functions pay fees to the National Archives Trust Fund only for the costs for room rental, administrative fees, additional cleaning, security, and other staff services NARA provides.

[78 FR 41305, July 10, 2013]

### § 1280.88 How do I request to use NARA public areas in the National Archives at College Park?

(a) Direct your request to use space to Special Events (Partnerships Division), National Archives and Records Administration, 700 Pennsylvania Avenue NW., Washington, DC 20408; or request by email to *specialevents@nara.gov*.

(b) You must submit requests for use of NARA public areas at least 30 calendar days before the proposed event is to occur.

(c) OMB control number 3095–0043 has been assigned to the information collection contained in this section.

[73 FR 36794, June 30, 2008, as amended at 78 FR 41305, July 10, 2013]

### § 1280.89 How will NARA handle my request to use public areas in the National Archives at College Park?

(a) When you ask to use public areas at the National Archives at College Park, we will review your request to:

(1) Ensure that it meets all of the provisions in this subpart;

(2) Determine if the room you have requested is available on the date and time you have requested; and

(3) Determine the cost of the event.

(b) When we have completed this review, we will notify you of the decision. We may ask for additional information before deciding whether or not to approve your event.

(c) NARA reserves the right to review, reject, or require changes in any material, activity, or caterer you intend to use for the event.

## Subpart E—What Additional Rules Apply for Use of Facilities in Presidential Libraries?

### § 1280.90 What are the rules of conduct while visiting the Presidential libraries?

In addition to the rules in Subpart A, when visiting the museums of the Presidential Libraries, you may be required to check all of your parcels and luggage in areas designated by Library staff.

### § 1280.92 When are the Presidential library museums open to the public?

(a) The Presidential library museums are open every day except Thanksgiving, December 25, and January 1 (with the exception of the Lyndon Baines Johnson Library which is only closed December 25). For more specific information about museum hours, please contact the libraries directly or visit the NARA Web site at *http://www.archives.gov*. Hours for the Presidential libraries' research rooms are also posted at *http://www.archives.gov*.

(b) See 36 CFR 1253.3 for the operating hours of the research rooms of the Presidential Libraries.

[65 FR 34978, June 1, 2000, as amended at 75 FR 71547, Nov. 24, 2010]

### § 1280.94 When do Presidential libraries allow other groups to use their public areas for events?

(a) Although Presidential Library buildings and grounds are intended primarily for the libraries' use in carrying out their programs, you may request the use of Presidential Library facilities when the proposed activity is:

(1) Sponsored, cosponsored, or authorized by the library;

(2) Conducted to further the library's interests; and

(3) Scheduled so as not to interfere with the normal operation of the library.

(b) Your event at the library must be for the benefit of or in connection with the mission and programs of the library and must be consistent with the public perception of the library as a research and cultural institution.

(c) To request the use of a library area, you must apply in writing to the library director (see 36 CFR 1253.3 for the address) and complete NA Form 16011, Application for Use of Space in Presidential Libraries. OMB control number 3095–0024 has been assigned to the information collection contained in this section.

(d) You may not use library facilities for any activities that involve:

(1) Profit making;

(2) Commercial advertising and sales;

(3) Partisan political activities;

(4) Sectarian activities, or other similar activities; or

(5) Any use inconsistent with those authorized in this section.

(e) You may not charge admission fees, indirect assessment, or take any other kind of monetary collection at the event. NARA will charge normal admission fees to the museum if that area is used for the event.

(f) You will be assessed additional charges by the library director to reimburse the Government for expenses incurred as a result of your use of the library facility.

### § 1280.96 Supplemental rules.

Library directors may establish appropriate supplemental rules governing use of Presidential libraries and adjacent buildings and areas under NARA control.

## Subpart F—What Additional Rules Apply for Use of Public Areas at Regional Records Services Facilities?

### § 1280.100 What are the rules of conduct at NARA regional records services facilities?

While at any NARA regional records services facility, you are subject to all of the following:

(a) The GSA regulations, Conduct on Federal Property (41 CFR Part 102–74, Subpart C);

(b) The rules in Subparts B and F of this part;

(c) Section 1280.1(b through d);

(d) Section 1280.32(1);

(e) Section 1280.34 (a)(1) and (a)(2); and

(f) Section 1280.36.

[68 FR 53883, Sept. 15, 2003]

### § 1280.102 When do NARA regional records services facilities allow other groups to use their public areas for events?

(a) Although NARA regional records services facility auditoriums and other public spaces in the facility buildings and the facility grounds are intended primarily for the use of the NARA regional records services facility in carrying out its programs, you may request to use one of these areas for lectures, seminars, meetings, and similar activities when these activities are:

(1) Sponsored, cosponsored, or authorized by the NARA regional records services facility;

(2) To further NARA's interests; and

(3) Scheduled so as not to interfere with the normal operation of the NARA regional records services facility.

(b) Your event at the NARA regional records services facility must be for the benefit of or in connection with the mission and programs of NARA.

(c) You must ask permission to use a public area at a NARA regional records services facility from the director of that facility (see 36 CFR 1253.6 for a list of addresses).

(d) NARA regional records services facilities will not allow use of any auditoriums or other public spaces for any activities that involve:

(1) Profit making;

(2) Commercial advertising and sales;

(3) Partisan political activities;

(4) Sectarian activities, or other similar activities; or

(5) Any use inconsistent with those authorized in this section.

(e) You may not charge admission fees, indirect assessment, or take any other kind of monetary collection at the event.

(f) You will be assessed a charge by the facility director to reimburse the Government for expenses incurred as a result of the your use of the facility.

## PART 1281—PRESIDENTIAL LIBRARY FACILITIES

Sec.

1281.1 What is the scope of this part?
1281.2 What publications are incorporated by reference?
1281.3 What definitions apply to this part?
1281.4 What are the architectural and design standards for Presidential libraries?
1281.6 What certifications must be provided to NARA?
1281.8 What information must be provided to NARA for its report to Congress on a new Presidential library facility?
1281.10 When does a foundation consult with NARA before offering a gift of a physical or material change, or addition to an existing library?
1281.12 What information must be provided to NARA for its report to Congress on a change or addition to a Presidential library facility?
1281.14 What type of endowment is required for a Presidential library?
1281.16 What standard does NARA use for measuring building size?

AUTHORITY: 44 U.S.C. 2104(a), 2112.

SOURCE: 73 FR 34198, June 17, 2008, unless otherwise noted.

### § 1281.1 What is the scope of this part?

(a) This part implements provisions of the Presidential Libraries Act, codified at 44 U.S.C. 2112(a) and (g). The Act requires the Archivist of the United States to promulgate architectural and design standards for new and existing Presidential libraries in order to ensure that such depositories preserve Presidential records subject to Chapter 22 of this title and papers and other historical materials accepted for deposit under section 2111 of this title and contain adequate research facilities. In addition the Archivist must submit a written report to the Congress before accepting new libraries or certain proposed physical or material changes or additions to an existing library; and to ensure, for existing libraries subject to the mandatory endowment requirement, that the endowment specified by 44 U.S.C. 2112(g) has

been transferred to the National Archives Trust Fund before acceptance by the Archivist.

(b) This part applies to design and construction of new libraries that are offered to NARA on or after July 17, 2008 and to material changes or additions to new and existing libraries funded wholly by gift on or after that date.

### § 1281.2 What publications are incorporated by reference?

(a) The materials listed in this section are incorporated by reference in the corresponding sections noted. These incorporations by reference were approved by the Director of the Federal Register in accordance with 5 U.S.C. 552(a) and 1 CFR part 51. These materials are incorporated as they exist on the date of the approval, and notice of any change in these materials will be published in the FEDERAL REGISTER. The materials are available for purchase at the corresponding addresses noted below. You may inspect a copy at the National Archives and Records Administration, 8601 Adelphi Road, College Park, MD 20740 or at the Office of the Federal Register (OFR). For information on the availability of this material at the OFR, call 202–741–6030, or go to: *http://www.archives.gov/federal_register/code_of_federal_regulations/ibr_locations.html*.

(b) The following materials are available for purchase from the Building Owners and Managers Association (BOMA), BOMA International 1201 New York Avenue, NW., Suite 300, Washington DC, 20005, *http://www.boma.org*. or the American National Standards Institute, (ANSI), Inc., 11 West 42nd Street, New York, NY 10036.

(1) ANSI/BOMA Z65.1–1996, Standard Method for Measuring Floor Areas in Office Buildings (the BOMA Standard), approved June 7, 1996; IBR approved for §§ 1281.3, and 1281.16.

(2) [Reserved]

[73 FR 34198, June 17, 2008, as amended at 76 FR 11337, Mar. 2, 2011]

### § 1281.3 What definitions apply to this part?

The following definitions apply to this part:

*Architectural and design standards*. This term refers to the document cited in § 1281.4.

*Archival functions*. The term means arranging, describing, reviewing, preserving, reproducing, restoring, exhibiting, and making available Presidential and other records and historical materials in the care and custody of the Presidential libraries, and includes the salaries and expenses of NARA personnel performing those functions.

*Endowment library*. This term means a Presidential library that is subject to the endowment requirements of 44 U.S.C. 2112(g). The term includes the existing libraries of presidents who took the oath of office as President for the first time on or after January 20, 1985, the proposed library of President George W. Bush, and the libraries of presidents who take the oath of office as President for the first time on or after July 1, 2002.

*Equipment*. As used in this part, the term means operating equipment that must be furnished with the new library and included in the calculation of the required endowment. Operating equipment is fundamental to the operation of the library and is normally built into the facility or permanently mounted to the structure.

*Existing library*. This term means a Presidential library that has been accepted by the Archivist under 44 U.S.C. 2112(a) and established as part of the system of Presidential libraries managed by NARA.

*Facility operations*. This term means those activities, including administrative services, involved with maintaining, operating, protecting, and improving a Presidential library.

*Foundation*. This term means a private organization organized under state law to construct a new Presidential library. The term usually refers to nonprofit charitable organizations that meet the requirements of section 501(c)(3) of the Internal Revenue Code (26 CFR 501(c)(3)). The term specifically includes ''foundation'' and ''institute,'' as those terms are used in 44 U.S.C. 2112(a)(1)(B).

*Historical materials*. The term ''historical materials'' has the meaning set forth at 44 U.S.C. 2101.

*New library*. This term means a Presidential library for a President who took the oath of office as President for the first time on or after January 20, 1985, that has not been accepted by the Archivist under 44 U.S.C. 2112(a). Presidential libraries that have been accepted by the Archivist and established as part of the system of Presidential libraries that are managed by NARA are ''existing libraries.''

*Physical or material change or addition*. This term means any addition of square footage, as defined by the BOMA Standard (incorporated by reference in § 1281.2) or any physical or material change to the existing structure of an existing library that results in a significant increase in the cost of facility operations.

*Presidential library*. This term means a Presidential archival depository as defined in 44 U.S.C. 2101.

*Presidential records*. The term has the meaning set forth at 44 U.S.C. 2201.

### § 1281.4 What are the architectural and design standards for Presidential libraries?

The Archivist is required by 44 U.S.C. 2112(a)(2) to promulgate architectural and design standards for Presidential libraries. The standards address the architectural, design, and structural requirements of a new Presidential library and additions or renovations, and they ensure that Presidential libraries are safe and efficient to operate and provide adequate and secure research and museum facilities. A copy of the standards is provided to the foundation upon request and is available from the Office of Presidential Libraries (NL), Room 2200, 8601 Adelphi Rd., College Park, MD 20740–6001.

### § 1281.6 What certifications must be provided to NARA?

(a) The foundation must provide to NARA design and construction certifications specified in the architectural and design standards.

(b) Any item that NARA finds is not in compliance with the architectural and design standards must be corrected by the foundation or, if not corrected by the foundation, will be corrected by NARA with the foundation paying the full cost of taking necessary corrective action.

### § 1281.8 What information must be provided to NARA for its report to Congress on a new Presidential library facility?

(a) NARA must submit a report to Congress on a proposed new library pursuant to 44 U.S.C. 2112(a)(3). The foundation that is building the library must help NARA as necessary in compiling the information needed for this report. If a State, political subdivision, university, institution of higher learning, or institute participates in the construction of the new library (e.g., by making land available for the facility), that party is subject to the same requirement. Requested information must be sent to the Office of Presidential Libraries (NL), Room 2200, 8601 Adelphi Rd., College Park, MD 20740–6001 far enough in advance of the anticipated date of transfer of the Library for NARA to compile and submit the report so that it may lie before Congress for the minimum time period specified in 44 U.S.C. 2112(a)(5). The normal lead time for submitting the required information is a least six months in advance of the anticipated date of transfer, but the submission date is subject to negotiation between NARA and the foundation in specific cases. The collection of information by NARA for these purposes has been approved under the Paperwork Reduction Act by the Office of Management and Budget with the control number 3095–0036.

(b) Paragraph (a)(3) of 44 U.S.C. 2112 lists the information that NARA must include in its report to Congress. The foundation and NARA will agree as part of the planning process for a new library on what information the foundation will provide and when. The same requirement applies to other entities involved in the construction of a new library (e.g., a local government or university). Foundations will normally be responsible, at a minimum, for providing the following information to NARA:

(1) A description of the land, facility, and equipment offered as a gift or to be made available without transfer of title, which must include:

(i) The legal description of the land, including plat, and evidence of clear title to the land upon which the library is constructed;

(ii) Site plan, floor plans, building sections and elevations, artist's representation of building and grounds;

(iii) Description of building contents, including furniture, equipment, and museum installations; and

(iv) Measurement of the facility in accordance with § 1281.16.

(2) A statement specifying the estimated total cost of the library and the amount of the endowment required pursuant to 44 U.S.C. 2112(g);

(3) An offer or other statement setting forth the terms of the proposed agreement for transfer or use of the facility, if any;

(4) Copies of any proposed agreements between the state, other political subdivision, the donating group, other institutions, and the United States which may affect ownership or operation of the library facility;

(5) A statement of and copies of any proposed agreements concerning the proposed support of library programs by non-federal sources; and

(6) A statement on cost-saving design features of the building.

(7) A written certification that the library and the equipment therein will comply with NARA standards.

### § 1281.10 When does a foundation consult with NARA before offering a gift of a physical or material change, or addition to an existing library?

A foundation must consult with the Office of Presidential Libraries before beginning the process of offering a gift for the purpose of making a physical or material change or addition to a new or existing library. NARA will furnish the interested foundation the current architectural and design standards as specified in § 1281.4. Others may request a single copy by writing the Office of Presidential Libraries (NL), Room 2200, 8601 Adelphi Road, College Park, Maryland 20740–6001.

### § 1281.12 What information must be provided to NARA for its report to Congress on a change or addition to a Presidential library facility?

(a) NARA must submit a report to Congress on a proposed physical or material change or addition to an existing library that is being funded wholly by gift. The foundation or other party offering the gift to NARA must help NARA as necessary in compiling the information needed for the report. Required information must be sent to the Office of Presidential Libraries (NL), Room 2200, 8601 Adelphi Rd., College Park, MD 20740–6001, far enough in advance of the Archivist's acceptance of the gift for NARA to compile and submit the report to Congress in accordance with 44 U.S.C. 2112(a)(5). The normal lead time for submitting the required information on physical or material changes or additions is at least nine (9) months in advance of the anticipated date that work will begin on the physical or material change or addition to the library. The collection of information contained in this section has been approved under the Paperwork Reduction Act by the Office of Management and Budget with the control number 3095–0036.

(b) Paragraph (a)(4) of 44 U.S.C. 2112 lists the information that NARA must include in its report to Congress. The donor and NARA will agree as part of the planning process what information the donor will provide and when, but donors will normally be responsible, at a minimum, for providing the following information to NARA:

(1) A description of the gift, which must include as appropriate:

(i) The legal description of the land, including plat;

(ii) Site plan, floor plans, building sections and elevations, artist's representation of building and grounds as they will be affected by the gift;

(iii) Description of building contents that are part of the gift, including furniture, equipment, and museum installations;

(iv) For endowment libraries, a measurement of the addition or change to the facility in accordance with § 1281.16; and

(v) A review of all critical spaces where NARA holdings will be stored,

used, or exhibited, including information on life-safety, environmental, holdings storage, and other systems against NARA standards.

(2) A statement of the estimated total cost of the proposed physical or material change or addition to the library, and, for endowment libraries, an estimate of the amount of the additional endowment required pursuant to 44 U.S.C. 2112(g).

(3) A statement of the purpose of the proposed change or addition.

(4) A written certification that the library and the equipment therein will comply with NARA standards after the change or addition is made.

### § 1281.14 What type of endowment is required for a Presidential library?

(a) *Endowment requirement—new libraries.* The foundation or organization that is offering NARA a new Presidential library must establish an endowment for the library, by gift or bequest, in the National Archives Trust Fund before the Archivist may accept the transfer of the library. The purpose of the endowment is to help NARA defray the cost of facility operations. The endowment requirement for the prospective new library of President George W. Bush is set forth in paragraphs 2 and 3 of 44 U.S.C. 2112(g). The endowment requirements for the new libraries of presidents taking the oath of office from the first time on or after July 1, 2002, are set forth in paragraphs 2, 3, and 5 of 44 U.S.C. 2112(g).

(b) *Endowment requirement—change or addition to an endowment library.* For a proposed physical or material change or addition to an endowment library that is being funded wholly by gift, the foundation or other organization that is offering the gift must agree, as a condition of the gift, to transfer monies by gift or bequest to the library's existing endowment in the National Archives Trust Fund in an amount sufficient to satisfy the requirements of paragraphs 2, 3, and 5 of 44 U.S.C. 2112(g). The Archivist must determine that the additional endowment monies have been transferred to the Trust Fund before he accepts the gift of the physical or material change or addition.

(c) *Use of endowment income.* The income from a library's endowment is available to cover the cost of facility operations, but is not available for the performance of archival functions.

(d) *Calculating a library's endowment.* The formulas for calculating the required endowment are set forth in 44 U.S.C. 2112(g)(3)–(5).

(e) *Equipment costs that must be included in the endowment calculation.* The cost of all operating equipment provided with a new library must be included in the endowment calculation pursuant to 44 U.S.C. 2112(g)(3). The Archivist will provide in the architectural and design standards, a list of equipment guidelines, recommendations, and minimum requirements for a foundation's use in designing and building a new library. The list is not exhaustive and requirements may change with evolving technology, program requirements, and the final library design.

(f) *Formula for a shared use library building.* For endowment purposes, the construction cost of a shared use library building containing both NARA and Foundation-controlled areas will be determined using the following formula: The percentage of the usable square footage of the NARA-controlled areas to the usable square footage of the entire building multiplied by the cost of the entire building. That figure is then used in calculating a library's endowment as specified by subsection (d) of this section and 44 U.S.C. 2112(g)(3)–(5).

### § 1281.16 What standard does NARA use for measuring building size?

For purposes of 44 U.S.C. 2112(g)(3) and (4), and this part, NARA has adopted the BOMA Standard (incorporated by reference in § 1281.2) as the standard for measuring the size of the facility and the value for calculating the endowment. The architectural and design standards contain the description of the area to be measured as to obtain the useable square footage and the exclusions to the measurement.

## PART 1284—EXHIBITS

Sec.

1284.1 Scope of part.

1284.20 Does NARA exhibit privately-owned material?
1284.30 Does NARA lend documents to other institutions for exhibit purposes?

AUTHORITY: 44 U.S.C. 2104(a), 2109.

SOURCE: 69 FR 39323, June 30, 2004, unless otherwise noted.

### § 1284.1 Scope of part.

This part sets forth policies and procedures concerning the exhibition of materials.

### § 1284.20 Does NARA exhibit privately-owned material?

(a) NARA does not normally accept for display documents, paintings, or other objects belonging to private individuals or organizations except as part of a NARA-produced exhibit.

(b) NARA may accept for temporary special exhibit at the National Archives Building privately-owned documents or other objects under the following conditions:

(1) The material to be displayed relates to the institutional history of the National Archives and Records Administration or its predecessor organizations, the National Archives Establishment and the National Archives and Records Service;

(2) Exhibition space is available in the building that NARA judges to be appropriate in terms of security, light level, climate control, and available exhibition cases or other necessary fixtures; and

(3) NARA has resources (such as exhibit and security staff) available to produce the special exhibit.

(c) The Director of Museum Programs (NWE), in conjunction with the NARA General Counsel when appropriate, reviews all offers to display privately-owned material in the Washington, DC, area, and negotiates the terms of exhibition for offers that NARA can accept. Directors of Presidential libraries perform these tasks for their respective libraries. The lender must provide in writing evidence of title to and authenticity of the item(s) to be displayed before NARA makes a loan agreement.

(d) The Director of Museum Programs or director of the pertinent Presidential library will inform the offering private individual or organization of NARA's decision in writing within 60 days.

### § 1284.30 Does NARA lend documents to other institutions for exhibit purposes?

Yes, NARA considers lending documents that are in appropriate condition for exhibition and travel. Prospective exhibitors must comply with NARA's requirements for security, fire protection, environmental controls, packing and shipping, exhibit methods, and insurance. For additional information, contact Registrar, Museum Programs (NWE), National Archives and Records Administration, 8601 Adelphi Road, College Park, MD 20740–6001.

# SUBCHAPTER H—JFK ASSASSINATION RECORDS

## PART 1290—GUIDANCE FOR INTERPRETATION AND IMPLEMENTATION OF THE PRESIDENT JOHN F. KENNEDY ASSASSINATION RECORDS COLLECTION ACT OF 1992 (JFK ACT)


Sec.
1290.1 Scope of assassination record.
1290.2 Scope of additional records and information.
1290.3 Sources of assassination records and additional records and information.
1290.4 Types of materials included in scope of assassination record and additional records and information.
1290.5 Requirement that assassination records be released in their entirety.
1290.6 Originals and copies.
1290.7 Additional guidance.
1290.8 Implementing the JFK Act—Notice of Assassination Record Designation.


AUTHORITY: 44 U.S.C. 2107.

SOURCE: 60 FR 33349, June 28, 1995, unless otherwise noted. Redesignated at 65 FR 39550, June 27, 2000.

### § 1290.1 Scope of assassination record.

(a) An *assassination record* includes, but is not limited to, all records, public and private, regardless of how labeled or identified, that document, describe, report on, analyze or interpret activities, persons, or events reasonably related to the assassination of President John F. Kennedy and investigations of or inquiries into the assassination.

(b) An *assassination record* further includes, without limitation:

(1) All records as defined in Section 3(2) of the JFK Act;

(2) All records collected by or segregated by all Federal, state, and local government agencies in conjunction with any investigation or analysis of or inquiry into the assassination of President Kennedy (for example, any intra-agency investigation or analysis of or inquiry into the assassination; any interagency communication regarding the assassination; any request by the House Select Committee on Assassinations to collect documents and other materials; or any inter- or intra-agency collection or segregation of documents and other materials);

(3) Other records or groups of records listed in the Notice of Assassination Record Designation, as described in § 1290.8 of this chapter.

[60 FR 33349, June 28, 1995. Redesignated at 65 FR 39550, June 27, 2000, as amended at 66 FR 18873, Apr. 12, 2001]

### § 1290.2 Scope of additional records and information.

The term *additional records and information* includes:

(a) All documents used by government offices and agencies during their declassification review of assassination records as well as all other documents, indices, and other material (including but not limited to those that disclose cryptonyms, code names, or other identifiers that appear in assassination records) that the Assassination Records Review Board (Review Board) has a reasonable basis to believe may constitute an assassination record or would assist in the identification, evaluation or interpretation of an assassination record. The Review Board will identify in writing those records and other materials it intends to seek under this section.

(b) All training manuals, instructional materials, and guidelines created or used by the agencies in furtherance of their review of assassination records.

(c) All records, lists, and documents describing the procedure by which the agencies identified or selected assassination records for review.

(d) Organizational charts of government agencies.

(e) Records necessary and sufficient to describe the agency's:

(1) Records policies and schedules;

(2) Filing systems and organization;

(3) Storage facilities and locations;

(4) Indexing symbols, marks, codes, instructions, guidelines, methods, and procedures;

(5) Search methods and procedures used in the performance of the agencies' duties under the JFK Act; and

(6) Reclassification to a higher level, transfer, destruction, or other information (e.g., theft) regarding the status of assassination records.

(f) Any other record that does not fall within the scope of assassination record as described in §1290.1, but which has the potential to enhance, enrich, and broaden the historical record of the assassination.

[60 FR 33349, June 28, 1995. Redesignated at 65 FR 39550, June 27, 2000, as amended at 66 FR 18873, Apr. 12, 2001]

### §1290.3 Sources of assassination records and additional records and information.

Assassination records and additional records and information may be located at, or under the control of, without limitation:

(a) Agencies, offices, and entities of the executing, legislative, and judicial branches of the Federal Government;

(b) Agencies, offices, and entities of the executive, legislative, and judicial branches of state and local governments;

(c) Record repositories and archives of Federal, state, and local governments, including presidential libraries;

(d) Record repositories and archives of universities, libraries, historical societies, and other similar organizations;

(e) Individuals who possess such records by virtue of service with a government agency, office, or entity;

(f) Persons, including individuals and corporations, who have obtained such records from sources identified in paragraphs (a) through (e) of this section;

(g) Persons, including individuals and corporations, who have themselves created or have obtained such records from sources other than those identified in paragraphs (a) through (e) of this section;

(h) Federal, state, and local courts where such records are being held under seal; or

(i) Foreign governments.

### §1290.4 Types of materials included in scope of assassination record and additional records and information.

The term *record* in *assassination record* and *additional records and information* includes, for purposes of interpreting and implementing the JFK Act:

(a) Papers, maps, and other documentary material;

(b) Photographs;

(c) Motion pictures;

(d) Sound and video recordings;

(e) Machine readable information in any form; and

(f) Artifacts.

### §1290.5 Requirement that assassination records be released in their entirety.

An assassination record shall be released in its entirety except for portions specifically postponed pursuant to the grounds for postponement of public disclosure of records established in §2107.6 of the JFK Act, and no portion of any assassination record shall be withheld from public disclosure solely on grounds of non-relevance unless, in the Review Board's sole discretion, release of part of a record is sufficient to comply with the intent and purposes of the JFK Act.

### §1290.6 Originals and copies.

(a) For purposes of determining whether originals or copies of assassination records will be made part of the President John F. Kennedy Assassination Records Collection (JFK Assassination Records Collection) established under the JFK Act, the following shall apply:

(1) In the case of papers, maps, and other documentary materials, the Review Board may determine that record copies of government records, either the signed original, original production or a reproduction that has been treated as the official record maintained to chronicle government functions or activities, may be placed in the JFK Assassination Records Collection;

(2) In the case of other papers, maps, and other documentary material, the Review Board may determine that a true and accurate copy of a record in lieu of the original may be placed in the JFK Assassination Records Collection;

(3) In the case of photographs, the original negative, whenever available (otherwise, the earliest generation print that is a true and accurate copy), may be placed in the JFK Assassination Records Collection;

(4) In the case of motion pictures, the camera original, whenever available (otherwise, the earliest generation

print that is a true and accurate copy), may be placed in the JFK Assassination Records Collection;

(5) In the case of sound and video recordings, the original recording, whenever available (otherwise, the earliest generation copy that is a true and accurate copy), may be placed in the JFK Assassination Records Collection;

(6) In the case of machine-readable information, a true and accurate copy of the original (duplicating all information contained in the original and in a format that permits retrieval of the information), may be placed in the JFK Assassination Records Collection; and

(7) In the case of artifacts, the original objects themselves may be placed in the JFK Assassination Records Collection.

(b) To the extent records from foreign governments are included in the JFK Assassination Records Collection, copies of the original records shall be sufficient for inclusion in the collection.

(c) In cases where a copy, as defined in paragraph (a) of this section, is authorized by the Review Board to be included in the JFK Assassination Records Collection, the Review Board may require that a copy be certified if, in its discretion, it determines a certification to be necessary to ensure the integrity of the JFK Assassination Records Collection. In cases where an original, as defined in paragraph (a) of this section, is required for inclusion in the JFK Assassination Records Collection, the Review Board may, at its discretion, accept the best available copy. In such cases that records included in the JFK Assassination Records Collection, whether originals or copies, contain illegible portions, such records shall have attached thereto a certified transcription of the illegible language to the extent practicable.

(d) For purposes of implementing the JFK Act, the term *copy* means a true and accurate photocopy duplication by a means appropriate to the medium of the original record that preserves and displays the integrity of the record and the information contained in it.

(e) Nothing in this section shall be interpreted to suggest that additional copies of any assassination records contained in the JFK Assassination Records Collection are not also assassination records that, at the Review Board's discretion, may also be placed in the JFK Assassination Records Collection.

(f) Nothing in this section shall be interpreted to prevent or to preclude copies of any electronic assassination records from being reformatted electronically in order to conform to different hardward and/or software requirements of audiovisual or machine readable formats if such is the professional judgment of the National Archives and Records Administration.

**§ 1290.7 Additional guidance.**

(a) A government agency, office, or entity includes, for purposes of interpreting and implementing the JFK Act, all current, past, and former departments, agencies, offices, divisions, foreign offices, bureaus, and deliberative bodies of any Federal, state, or local government and includes all inter- or intra-agency working groups, committees, and meetings that possess or created records relating to the assassination of President John F. Kennedy.

(b) The inclusion of artifacts in the scope of the term assassination record is understood to apply solely to the JFK Assassination Records Collection and to implement fully the terms of the JFK Act and has no direct or indirect bearing on the interpretation or implementation of any other statute or regulation.

(c) Whenever artifacts are included in the JFK Assassination Records Collection, it shall be sufficient to comply with the JFK Act if the public is provided access to photographs, drawings, or similar materials depicting the artifacts. Additional display of or examination by the public of artifacts in the JFK Assassination Records Collection shall occur under the terms and conditions established by the National Archives and Records Administration to ensure their preservation and protection for posterity.

(d) The terms and, or, any, all, and the plural and singular forms of nouns shall be understood in their broadest and most inclusive sense and shall not be understood to be terms of limitation.

(e) Unless the Review Board in its sole discretion directs otherwise, records that are identified with respect to a particular person shall include all records ralating to that person that use or reflect the true name or any other name, pseudonym, codeword, symbol number, cryptonym, or alias used to identify that person.

(f) Unless the Review Board in its sole discretion directs otherwise, records that are identified by the Review Board with respect to a particular operation or program shall include all records, pertaining to that program by any other name, pseudonym, codeword, symbol, number, or cryptonym.

**§ 1290.8 Implementing the JFK Act—Notice of Assassination Record Designation.**

(a) A Notice of Assassination Record Designation (NARD) shall be the mechanism for the Review Board to announce publicly its determination that a record or group of records meets the definition of assassination records.

(b) Notice of all NARDs will be published in the FEDERAL REGISTER within 30 days of the decision to designate such records as assassination records.

(c) In determining to designate such records as assassination records, the Review Board must determine that the record or group of record will more likely than not enhance, enrich, and broaden the historical record of the assassination.

## PARTS 1291–1299 [RESERVED]