AUTHENTICATED
U.S. GOVERNMENT
INFORMATION
GPO

4. ROUNDING CONVENTIONS FOR THE 1-HOUR PRIMARY SO_2 NAAQS

(a) Hourly SO_2 measurement data shall be reported to AQS in units of parts per billion (ppb), to at most one place after the decimal, with additional digits to the right being truncated with no further rounding.

(b) Daily maximum 1-hour values and therefore the annual 99th percentile of those daily values are not rounded.

(c) The 1-hour primary standard design value is calculated pursuant to section 5 and then rounded to the nearest whole number or 1 ppb (decimals 0.5 and greater are rounded up to the nearest whole number, and any decimal lower than 0.5 is rounded down to the nearest whole number).

5. CALCULATION PROCEDURES FOR THE 1-HOUR PRIMARY SO_2 NAAQS

(a) *Procedure for identifying annual 99th percentile values.* When the data for a particular ambient air quality monitoring site and year meet the data completeness requirements in section 3(b), or if one of the conditions of section 3(c) is met, or if the Administrator exercises the discretionary authority in section 3(d), identification of annual 99th percentile value is accomplished as follows.

(i) The annual 99th percentile value for a year is the higher of the two values resulting from the following two procedures.

(1) *Procedure 1.* For the year, determine the number of days with at least 75 percent of the hourly values reported.

(A) For the year, determine the number of days with at least 75 percent of the hourly values reported including State-flagged data affected by exceptional events which have been approved for exclusion by the Administrator.

(B) For the year, from only the days with at least 75 percent of the hourly values reported, select from each day the maximum hourly value excluding State-flagged data affected by exceptional events which have been approved for exclusion by the Administrator.

(C) Sort all these daily maximum hourly values from a particular site and year by descending value. (For example: (x[1], x[2], x[3], * * *, x[n]). In this case, x[1] is the largest number and x[n] is the smallest value.) The 99th percentile is determined from this sorted series of daily values which is ordered from the highest to the lowest number. Using the left column of Table 1, determine the appropriate range (*i.e.*, row) for the annual number of days with valid data for year y (cn_y). The corresponding ''n'' value in the right column identifies the rank of the annual 99th percentile value in the descending sorted list of daily site values for year y. Thus, $P_{0.99,y}$ = the nth largest value.

(2) *Procedure 2.* For the year, determine the number of days with at least one hourly value reported.

(A) For the year, determine the number of days with at least one hourly value reported including State-flagged data affected by exceptional events which have been approved for exclusion by the Administrator.

(B) For the year, from all the days with at least one hourly value reported, select from each day the maximum hourly value excluding State-flagged data affected by exceptional events which have been approved for exclusion by the Administrator.

(C) Sort all these daily maximum values from a particular site and year by descending value. (For example: (x[1], x[2], x[3], * * *, x[n]). In this case, x[1] is the largest number and x[n] is the smallest value.) The 99th percentile is determined from this sorted series of daily values which is ordered from the highest to the lowest number. Using the left column of Table 1, determine the appropriate range (*i.e.*, row) for the annual number of days with valid data for year y (cn_y). The corresponding ''n'' value in the right column identifies the rank of the annual 99th percentile value in the descending sorted list of daily site values for year y. Thus, $P_{0.99,y}$ = the nth largest value.

(b) The 1-hour primary standard design value for an ambient air quality monitoring site is mean of the three annual 99th percentile values, rounded according to the conventions in section 4.

TABLE 1

Annual number of days with valid data for year "y" (cn_y)	$P_{0.99,y}$ is the nth maximum value of the year, where n is the listed number
1–100	1
101–200	2
201–300	3
301–366	4

[75 FR 35595, June 23, 2010]

PART 51—REQUIREMENTS FOR PREPARATION, ADOPTION, AND SUBMITTAL OF IMPLEMENTATION PLANS

Subpart A—Air Emissions Reporting Requirements

GENERAL INFORMATION FOR INVENTORY PREPARERS

Sec.
51.1 Who is responsible for actions described in this subpart?
51.5 What tools are available to help prepare and report emissions data?
51.10 How does my state report emissions that are required by the NO_X SIP Call?

SPECIFIC REPORTING REQUIREMENTS

51.15 What data does my state need to report to EPA?
51.20 What are the emission thresholds that separate point and nonpoint sources?
51.25 What geographic area must my state's inventory cover?
51.30 When does my state report which emissions data to EPA?
51.35 How can my state equalize the emission inventory effort from year to year?
51.40 In what form and format should my state report the data to EPA?
51.45 Where should my state report the data?
51.50 What definitions apply to this subpart?

APPENDIX A TO SUBPART A OF PART 51—TABLES
APPENDIX B TO SUBPART A OF PART 51 [RESERVED]

Subparts B–E [Reserved]

Subpart F—Procedural Requirements

51.100 Definitions.
51.101 Stipulations.
51.102 Public hearings.
51.103 Submission of plans, preliminary review of plans.
51.104 Revisions.
51.105 Approval of plans.

Subpart G—Control Strategy

51.110 Attainment and maintenance of national standards.
51.111 Description of control measures.
51.112 Demonstration of adequacy.
51.113 [Reserved]
51.114 Emissions data and projections.
51.115 Air quality data and projections.
51.116 Data availability.
51.117 Additional provisions for lead.
51.118 Stack height provisions.
51.119 Intermittent control systems.
51.120 Requirements for State Implementation Plan revisions relating to new motor vehicles.
51.121 Findings and requirements for submission of State implementation plan revisions relating to emissions of oxides of nitrogen.
51.122 Emissions reporting requirements for SIP revisions relating to budgets for NO_x emissions.
51.123 Findings and requirements for submission of State implementation plan revisions relating to emissions of oxides of nitrogen pursuant to the Clean Air Interstate Rule.
51.124 Findings and requirements for submission of State implementation plan revisions relating to emissions of sulfur dioxide pursuant to the Clean Air Interstate Rule.
51.125 [Reserved]
51.126 Determination of widespread use of ORVR and waiver of CAA section 182(b)(3) Stage II gasoline vapor recovery requirements.

Subpart H—Prevention of Air Pollution Emergency Episodes

51.150 Classification of regions for episode plans.
51.151 Significant harm levels.
51.152 Contingency plans.
51.153 Reevaluation of episode plans.

Subpart I—Review of New Sources and Modifications

51.160 Legally enforceable procedures.
51.161 Public availability of information.
51.162 Identification of responsible agency.
51.163 Administrative procedures.
51.164 Stack height procedures.
51.165 Permit requirements.
51.166 Prevention of significant deterioration of air quality.

Subpart J—Ambient Air Quality Surveillance

51.190 Ambient air quality monitoring requirements.

Subpart K—Source Survelliance

51.210 General.
51.211 Emission reports and recordkeeping.
51.212 Testing, inspection, enforcement, and complaints.
51.213 Transportation control measures.
51.214 Continuous emission monitoring.

Subpart L—Legal Authority

51.230 Requirements for all plans.
51.231 Identification of legal authority.
51.232 Assignment of legal authority to local agencies.

Subpart M—Intergovernmental Consultation

AGENCY DESIGNATION

51.240 General plan requirements.
51.241 Nonattainment areas for carbon monoxide and ozone.
51.242 [Reserved]

Subpart N—Compliance Schedules

51.260 Legally enforceable compliance schedules.
51.261 Final compliance schedules.
51.262 Extension beyond one year.

Subpart O—Miscellaneous Plan Content Requirements

51.280 Resources.
51.281 Copies of rules and regulations.
51.285 Public notification.
51.286 Electronic reporting.

Subpart P—Protection of Visibility

51.300 Purpose and applicability.
51.301 Definitions.
51.302 Implementation control strategies for reasonably attributable visibility impairment.
51.303 Exemptions from control.
51.304 Identification of integral vistas.
51.305 Monitoring for reasonably attributable visibility impairment.
51.306 Long-term strategy requirements for reasonably attributable visibility impairment.
51.307 New source review.
51.308 Regional haze program requirements.
51.309 Requirements related to the Grand Canyon Visibility Transport Commission.

Subpart Q—Reports

AIR QUALITY DATA REPORTING

51.320 Annual air quality data report.

SOURCE EMISSIONS AND STATE ACTION REPORTING

51.321 Annual source emissions and State action report.
51.322 Sources subject to emissions reporting.
51.323 Reportable emissions data and information.
51.324 Progress in plan enforcement.
51.326 Reportable revisions.
51.327 Enforcement orders and other State actions.
51.328 [Reserved]

Subpart R—Extensions

51.341 Request for 18-month extension.

Subpart S—Inspection/Maintenance Program Requirements

51.350 Applicability.
51.351 Enhanced I/M performance standard.
51.352 Basic I/M performance standard.
51.353 Network type and program evaluation.
51.354 Adequate tools and resources.
51.355 Test frequency and convenience.
51.356 Vehicle coverage.
51.357 Test procedures and standards.
51.358 Test equipment.
51.359 Quality control.
51.360 Waivers and compliance via diagnostic inspection.
51.361 Motorist compliance enforcement.
51.362 Motorist compliance enforcement program oversight.
51.363 Quality assurance.
51.364 Enforcement against contractors, stations and inspectors.
51.365 Data collection.
51.366 Data analysis and reporting.
51.367 Inspector training and licensing or certification.
51.368 Public information and consumer protection.
51.369 Improving repair effectiveness.
51.370 Compliance with recall notices.
51.371 On-road testing.
51.372 State Implementation Plan submissions.
51.373 Implementation deadlines.
APPENDIX A TO SUBPART S—CALIBRATIONS, ADJUSTMENTS AND QUALITY CONTROL
APPENDIX B TO SUBPART S—TEST PROCEDURES
APPENDIX C TO SUBPART S—STEADY-STATE SHORT TEST STANDARDS
APPENDIX D TO SUBPART S—STEADY-STATE SHORT TEST EQUIPMENT
APPENDIX E TO SUBPART S—TRANSIENT TEST DRIVING CYCLE

Subpart T—Conformity to State or Federal Implementation Plans of Transportation Plans, Programs, and Projects Developed, Funded or Approved Under Title 23 U.S.C. or the Federal Transit Laws

51.390 Implementation plan revision.

Subpart U—Economic Incentive Programs

51.490 Applicability.
51.491 Definitions.
51.492 State program election and submittal.
51.493 State program requirements.
51.494 Use of program revenues.

Subpart W—Determining Conformity of General Federal Actions to State or Federal Implementation Plans

51.850 [Reserved]
51.851 State implementation plan (SIP) or Tribal implementation plan (TIP) revision.
51.852–51.860 [Reserved]

Subpart X—Provisions for Implementation of 8-hour Ozone National Ambient Air Quality Standard

51.900 Definitions.
51.901 Applicability of part 51.
51.902 Which classification and nonattainment area planning provisions of the CAA shall apply to areas designated nonattainment for the 1997 8-hour NAAQS?

51.903 How do the classification and attainment date provisions in section 181 of subpart 2 of the CAA apply to areas subject to § 51.902(a)?
51.904 How do the classification and attainment date provisions in section 172(a) of subpart 1 of the CAA apply to areas subject to § 51.902(b)?
51.905 How do areas transition from the 1-hour NAAQS to the 1997 8-hour NAAQS and what are the anti-backsliding provisions?
51.906 Redesignation to nonattainment following initial designations for the 8-hour NAAQS.
51.907 For an area that fails to attain the 8-hour NAAQS by its attainment date, how does EPA interpret sections 172(a)(2)(C)(ii) and 181(a)(5)(B) of the CAA?
51.908 What modeling and attainment demonstration requirements apply for purposes of the 8-hour ozone NAAQS?
51.909 [Reserved]
51.910 What requirements for reasonable further progress (RFP) under sections 172(c)(2) and 182 apply for areas designated nonattainment for the 8-hour ozone NAAQS?
51.911 [Reserved]
51.912 What requirements apply for reasonably available control technology (RACT) and reasonably available control measures (RACM) under the 8-hour NAAQS?
51.913 How do the section 182(f) NO_X exemption provisions apply for the 8-hour NAAQS?
51.914 What new source review requirements apply for 8-hour ozone nonattainment areas?
51.915 What emissions inventory requirements apply under the 8-hour NAAQS?
51.916 What are the requirements for an Ozone Transport Region under the 8-hour NAAQS?
51.917 What is the effective date of designation for the Las Vegas, NV, 8-hour ozone nonattainment area?
51.918 Can any SIP planning requirements be suspended in 8-hour ozone nonattainment areas that have air quality data that meets the NAAQS?

Subpart Y—Mitigation Requirements

51.930 Mitigation of Exceptional Events.

Subpart Z—Provisions for Implementation of $PM_{2.5}$ National Ambient Air Quality Standards

51.1000 Definitions.
51.1001 Applicability of part 51.
51.1002 Submittal of State implementation plan.
51.1003 [Reserved]
51.1004 Attainment dates.
51.1005 One-year extensions of the attainment date.
51.1006 Redesignation to nonattainment following initial designations for the $PM_{2.5}$ NAAQS.
51.1007 Attainment demonstration and modeling requirements.
51.1008 Emission inventory requirements for the $PM_{2.5}$ NAAQS.
51.1009 Reasonable further progress (RFP) requirements.
51.1010 Requirements for reasonably available control technology (RACT) and reasonably available control measures (RACM).
51.1011 Requirements for mid-course review.
51.1012 Requirements for contingency measures.

Subpart AA—Provisions for Implementation of the 2008 Ozone National Ambient Air Quality Standards

51.1100 Definitions.
51.1101 Applicability of part 51.
51.1102 Classification and nonattainment area planning provisions.
51.1103 Application of classification and attainment date provisions in CAA section 181 of subpart 2 to areas subject to § 51.1102(a).

APPENDIXES A–K TO PART 51 [RESERVED]
APPENDIX L TO PART 51—EXAMPLE REGULATIONS FOR PREVENTION OF AIR POLLUTION EMERGENCY EPISODES
APPENDIX M TO PART 51—RECOMMENDED TEST METHODS FOR STATE IMPLEMENTATION PLANS
APPENDIXES N–O TO PART 51 [RESERVED]
APPENDIX P TO PART 51—MINIMUM EMISSION MONITORING REQUIREMENTS
APPENDIXES Q–R TO PART 51 [RESERVED]
APPENDIX S TO PART 51—EMISSION OFFSET INTERPRETATIVE RULING
APPENDIXES T–U TO PART 51 [RESERVED]
APPENDIX V TO PART 51—CRITERIA FOR DETERMINING THE COMPLETENESS OF PLAN SUBMISSIONS
APPENDIX W TO PART 51—GUIDELINE ON AIR QUALITY MODELS
APPENDIX X TO PART 51—EXAMPLES OF ECONOMIC INCENTIVE PROGRAMS
APPENDIX Y TO PART 51—GUIDELINES FOR BART DETERMINATIONS UNDER THE REGIONAL HAZE RULE

AUTHORITY: 23 U.S.C. 101; 42 U.S.C. 7401–7671q.

SOURCE: 36 FR 22398, Nov. 25, 1971, unless otherwise noted.

Subpart A—Air Emissions Reporting Requirements

SOURCE: 73 FR 76552, Dec. 17, 2008, unless otherwise noted.

GENERAL INFORMATION FOR INVENTORY PREPARERS

§51.1 Who is responsible for actions described in this subpart?

States must inventory emission sources located on nontribal lands and report this information to EPA.

§51.5 What tools are available to help prepare and report emissions data?

(a) We urge your state to use estimation procedures described in documents from the Emission Inventory Improvement Program (EIIP), available at the following Internet address: *http://www.epa.gov/ttn/chief/eiip*. These procedures are standardized and ranked according to relative uncertainty for each emission estimating technique. Using this guidance will enable others to use your state's data and evaluate its quality and consistency with other data.

(b) Where current EIIP guidance materials have been supplanted by state-of-the-art emission estimation approaches or are not applicable to sources or source categories, states are urged to use applicable, state-of-the-art techniques for estimating emissions.

§51.10 How does my state report emissions that are required by the NO_X SIP Call?

The District of Columbia and states that are subject to the NO_X SIP Call §51.121) are subject to the emissions reporting provisions of §51.122. This subpart A incorporates the pollutants, source, time periods, and required data elements for these reporting requirements.

SPECIFIC REPORTING REQUIREMENTS

§51.15 What data does my state need to report to EPA?

(a) *Pollutants*. Report actual emissions of the following (see §51.50 for precise definitions as required):

(1) Required pollutants for triennial reports of annual (12-month) emissions for all sources and every-year reports of annual emissions from Type A sources:

(i) Sulfur dioxide (SO_2).

(ii) Volatile organic compounds (VOC).

(iii) Nitrogen oxides (NO_X).

(iv) Carbon monoxide (CO).

(v) Lead and lead compounds.

(vi) Primary $PM_{2.5}$. As applicable, also report filterable and condensable components.

(vii) Primary PM_{10}. As applicable, also report filterable and condensable components.

(viii) Ammonia (NH_3).

(2) Required pollutants for all reports of ozone season (5 months) emissions: NO_X.

(3) Required pollutants for triennial reports of summer day emissions:

(i) NO_X.

(ii) VOC.

(4) Required pollutants for every-year reports of summer day emissions: NO_X.

(5) A state may, at its option, include estimates of emissions for additional pollutants (such as other pollutants listed in paragraph (a)(1) of this section or hazardous air pollutants) in its emission inventory reports.

(b) *Sources*. Emissions should be reported from the following sources in all parts of the state, excluding sources located on tribal lands:

(1) Point.

(2) Nonpoint.

(3) Onroad mobile.

(4) Nonroad mobile.

(c) *Supporting Information*. You must report the data elements in Tables 2a through 2c in Appendix A of this subpart. We may ask you for other data on a voluntary basis to meet special purposes.

(d) *Confidential Data*. We do not consider the data in Tables 2a through 2c in appendix A of this subpart confidential, but some states limit release of this type of data. Any data that you submit to EPA under this subpart will be considered in the public domain and cannot be treated as confidential. If Federal and state requirements are inconsistent, consult your EPA Regional Office for a final reconciliation.

(e) *Option to Submit Inputs to Emission Inventory Estimation Models in Lieu of Emission Estimates.* For a given inventory year, EPA may allow states to submit comprehensive input values for models capable of estimating emissions from a certain source type on a national scale, in lieu of submitting the emission estimates otherwise required by this subpart.

§ 51.20 What are the emission thresholds that separate point and nonpoint sources?

(a) All anthropogenic stationary sources must be included in your inventory as either point or nonpoint sources.

(b) Sources that meet the definition of point source in this subpart must be reported as point sources. All pollutants specified in § 51.15(a) must be reported for point sources, not just the pollutant(s) that qualify the source as a point source. The reporting of wildland and agricultural fires is encouraged but not required.

(c) If your state has lower emission reporting thresholds for point sources than paragraph (b) of this section, then you may use these in reporting your emissions to EPA.

(d) All stationary sources that are not reported as point sources must be reported as nonpoint sources. Episodic wind-generated particulate matter (PM) emissions from sources that are not major sources may be excluded, for example dust lifted by high winds from natural or tilled soil. In addition, if not reported as point sources, wildland and agricultural fires must be reported as nonpoint sources. Emissions of nonpoint sources may be aggregated to the county level, but must be separated and identified by source classification code (SCC). Nonpoint source categories or emission events reasonably estimated by the state to represent a de minimis percentage of total county and state emissions of a given pollutant may be omitted.

§ 51.25 What geographic area must my state's inventory cover?

Because of the regional nature of these pollutants, your state's inventory must be statewide, regardless of any area's attainment status.

§ 51.30 When does my state report which emissions data to EPA?

All states are required to report two basic types of emission inventories to EPA: Every-year Cycle Inventory; and Three-year Cycle Inventory. The sources and pollutants to be reported vary among states.

(a) Every-year cycle. See Tables 2a, 2b, and 2c of appendix A of this subpart for the specific data elements to report every year.

(1) All states are required to report every year the annual (12-month) emissions of all pollutants listed in § 51.15(a)(1) from Type A (large) point sources, as defined in Table 1 of appendix A of this subpart. The first every-year cycle inventory will be for the 2009 inventory year and must be submitted to EPA within 12 months, *i.e.*, by December 31, 2010.

(2) States subject to the emission reporting requirements of § 51.122 (the NO_X SIP Call) are required to report every year the ozone season emissions of NO_X and summer day emissions of NO_X from any point, nonpoint, onroad mobile, or nonroad mobile source for which the state specified control measures in its SIP submission under § 51.121(g). This requirement begins with the inventory year prior to the year in which compliance with the NO_X SIP Call requirements is first required.

(3) In inventory years that fall under the 3-year cycle requirements, the reporting required by the 3-year cycle satisfies the every-year reporting requirements of paragraph (a).

(b) Three-year cycle. See Tables 2a, 2b and 2c to appendix A of subpart A for the specific data elements that must be reported triennially.

(1) All states are required to report for every third inventory year the annual (12-month) emissions of all pollutants listed in § 51.15(a)(1) from all point sources, nonpoint sources, onroad mobile sources, and nonroad mobile sources. The first 3-year cycle inventory will be for the 2011 inventory and must be submitted to us within 12 months, *i.e.*, by December 31, 2012. Subsequent 3-year cycle (2011, 2014, etc.) inventories will be due 12 months after the end of the inventory year, *i.e.*, by December 31 of the following year.

(2) States subject to §51.122 must report ozone season emissions and summer day emissions of NO_X from all point sources, nonpoint sources, onroad mobile sources, and nonroad mobile sources. The first 3-year cycle inventory will be for the 2008 inventory year and must be submitted to EPA within 12 months, *i.e.*, by December 31, 2009. Subsequent 3-year cycle inventories will be due as specified under paragraph (b)(1) of this section.

(3) Any state with an area for which EPA has made an 8-hour ozone nonattainment designation finding (regardless of whether that finding has reached its effective date) must report summer day emissions of VOC and NO_X from all point sources, nonpoint sources, onroad mobile sources, and nonroad mobile sources. Summer day emissions of NO_X and VOC for sources in attainment counties that are covered by the nonattainment area modeling domain used to demonstrate reasonable further progress (RFP) must be included. The first 3-year cycle inventory will be for the 2011 inventory year and must be submitted to EPA within 12 months, *i.e.*, by December 31, 2012. Subsequent three-year cycle inventories will be due as specified under paragraph (b)(1) of this section.

(4) States with CO nonattainment areas and states with CO attainment areas subject to maintenance plans must report winter work weekday emissions of CO with their 3-year cycle inventories.

§51.35 How can my state equalize the emission inventory effort from year to year?

(a) Compiling a 3-year cycle inventory means more effort every 3 years. As an option, your state may ease this workload spike by using the following approach:

(1) Each year, collect and report data for all Type A (large) point sources (this is required for all Type A point sources).

(2) Each year, collect data for one-third of your sources that are not Type A point sources. Collect data for a different third of these sources each year so that data has been collected for all of the sources that are not Type A point sources by the end of each 3-year cycle. You must save 3 years of data and then report all emissions from the sources that are not Type A point sources on the 3-year cycle due date.

(3) Each year, collect data for one-third of the nonpoint, nonroad mobile, and onroad mobile sources. You must save 3 years of data for each such source and then report all of these data on the 3-year cycle due date.

(b) For the sources described in paragraph (a) of this section, your state will have data from 3 successive years at any given time, rather than from the single year in which it is compiled.

(c) If your state chooses the method of inventorying one-third of your sources that are not Type A point sources and 3-year cycle nonpoint, nonroad mobile, and onroad mobile sources each year, your state must compile each year of the 3-year period identically. For example, if a process has not changed for a source category or individual plant, your state must use the same emission factors to calculate emissions for each year of the 3-year period. If your state has revised emission factors during the 3 years for a process that has not changed, you must resubmit previous years' data using the revised factor. If your state uses models to estimate emissions, you must make sure that the model is the same for all 3 years.

(d) If your state needs a new reference year emission inventory for a selected pollutant, your state cannot use these optional reporting frequencies for the new reference year.

(e) If your state is a NO_X SIP Call state, you cannot use these optional reporting frequencies for NO_X SIP Call reporting.

§51.40 In what form and format should my state report the data to EPA?

(a) You must report your emission inventory data to us in electronic form.

(b) We support specific electronic data reporting formats, and you are required to report your data in a format consistent with these. The term format encompasses the definition of one or more specific data fields for each of the data elements listed in Tables 2a, 2b, and 2c in appendix A of this subpart;

allowed code values for categorical data fields; transmittal information; and data table relational structure. Because electronic reporting technology changes continually, contact the EPA Emission Inventory and Analysis Group (EIAG) for the latest specific formats. You can find information on the current formats at the following Internet address: *http://www.epa.gov/ttn/chief/nif/index.html*. You may also call the air emissions contact in your EPA Regional Office or our Info CHIEF help desk at (919) 541–1000 or send e-mail to *info.chief@epa.gov*.

§ 51.45 Where should my state report the data?

(a) Your state submits or reports data by providing it directly to EPA.

(b) The latest information on data reporting procedures is available at the following Internet address: *http://www.epa.gov/ttn/chief*. You may also call our Info CHIEF help desk at (919) 541–1000 or e-mail to *info.chief@epa.gov*.

§ 51.50 What definitions apply to this subpart?

Activity throughput means a measurable factor or parameter that relates directly or indirectly to the emissions of an air pollution source during the period for which emissions are reported. Depending on the type of source category, activity information may refer to the amount of fuel combusted, raw material processed, product manufactured, or material handled or processed. It may also refer to population, employment, or number of units. Activity throughput is typically the value that is multiplied against an emission factor to generate an emissions estimate.

Annual emissions means actual emissions for a plant, point, or process that are measured or calculated to represent a calendar year.

Ash content means inert residual portion of a fuel.

Contact name means the complete name of the lead contact person for the organization transmitting the data set, including first name, middle name or initial, and surname.

Contact phone number means the phone number for the contact name.

Control device type means the name of the type of control device (e.g., wet scrubber, flaring, or process change).

Day/wk in operations means days per week that the emitting process operates, averaged over the inventory period.

Design capacity means a measure of the size of a point source, based on the reported maximum continuous throughput or output capacity of the unit. For a boiler, design capacity is based on the reported maximum continuous steam flow, usually in units of million BTU per hour.

Emission factor means the ratio relating emissions of a specific pollutant to an activity or material throughput level.

Emission release point type means the code for physical configuration of the release point.

Emission type means the code describing temporal designation of emissions reported, *i.e.*, Entire Period, Average Weekday, etc.

Exit gas flow rate means the numeric value of the flow rate of a stack gas.

Exit gas temperature means the numeric value of the temperature of an exit gas stream.

Exit gas velocity means the numeric value of the velocity of an exit gas stream.

Facility ID codes means the unique codes for a plant or facility treated as a point source, containing one or more pollutant-emitting units. The EPA's reporting format for a given inventory year may require several facility ID codes to ensure proper matching between databases, e.g., the state's own current and most recent facility ID codes, the EPA-assigned facility ID codes, and the ORIS (Department of Energy) ID code if applicable.

Fall throughput (percent) means the part of the throughput or activity attributable to the three fall months (September, October, November). This expresses part of the annual activity information based on four seasons—typically spring, summer, fall, and winter. It is a percentage of the annual activity (e.g., out of 600 units produced each year, 150 units are produced in the fall which is 25 percent of the annual activity).

FIPS Code. Federal Information Placement System (FIPS) means the system of unique numeric codes the government developed to identify states, counties and parishes for the entire United States, Puerto Rico, and Guam.

Heat content means the amount of thermal heat energy in a solid, liquid, or gaseous fuel, averaged over the period for which emissions are reported. Fuel heat content is typically expressed in units of Btu/lb of fuel, Btu/gal of fuel, joules/kg of fuel, etc.

Hr/day in operations means the hours per day that the emitting process operates averaged over the inventory period.

Inventory end date means the last day of the inventory period.

Inventory start date means the first day of the inventory period.

Inventory year means the year for which emissions estimates are calculated.

Lead (Pb) means lead as defined in 40 CFR 50.12. Lead should be reported as elemental lead and its compounds.

NAICS means North American Industry Classification System code. The NAICS codes are U.S. Department of Commerce's codes for businesses by products or services and have replaced Standard Industrial Classification codes.

Maximum nameplate capacity means a measure of the size of a generator which is put on the unit's nameplate by the manufacturer. The data element is reported in megawatts or kilowatts.

Method accuracy description (MAD) codes means a set of six codes used to define the accuracy of latitude/longitude data for point sources. The six codes and their definitions are:

(1) *Coordinate Data Source Code:* The code that represents the party responsible for providing the latitude/longitude.

(2) *Horizontal Collection Method Code:* Method used to determine the latitude/longitude coordinates for a point on the earth.

(3) *Horizontal Accuracy Measure:* The measure of accuracy (in meters) of the latitude/longitude coordinates.

(4) *Horizontal Reference Datum Code:* Code that represents the reference datum used to determine the latitude/longitude coordinates.

(5) *Reference Point Code:* The code that represents the place for which geographic coordinates were established. Code value should be 106 (e.g., point where substance is released).

(6) *Source Map Scale Number:* The number that represents the proportional distance on the ground for one unit of measure on the map or photo.

Mobile source means a motor vehicle, nonroad engine or nonroad vehicle, where:

(1) A *motor vehicle* is any self-propelled vehicle used to carry people or property on a street or highway;

(2) A *nonroad engine* is an internal combustion engine (including fuel system) that is not used in a motor vehicle or a vehicle used solely for competition, or that is not affected by sections 111 or 202 of the CAA; and

(3) A *nonroad vehicle* is a vehicle that is run by a nonroad engine and that is not a motor vehicle or a vehicle used solely for competition.

Nitrogen oxides (NO_X) means nitrogen oxides (NO_X) as defined in 40 CFR 60.2 as all oxides of nitrogen except N_2O. Nitrogen oxides should be reported on an equivalent molecular weight basis as nitrogen dioxide (NO_2).

Nonpoint sources. Nonpoint sources collectively represent individual sources that have not been inventoried as specific point or mobile sources. These individual sources treated collectively as nonpoint sources are typically too small, numerous, or difficult to inventory using the methods for the other classes of sources.

Ozone season means the period from May 1 through September 30 of a year.

Particulate Matter (PM). Particulate matter is a criteria air pollutant. For the purpose of this subpart, the following definitions apply:

(1) *Filterable $PM_{2.5}$* or *Filterable PM_{10}*: Particles that are directly emitted by a source as a solid or liquid at stack or release conditions and captured on the filter of a stack test train. Filterable $PM_{2.5}$ is particulate matter with an aerodynamic diameter equal to or less than 2.5 micrometers. Filterable PM_{10} is particulate matter with an aerodynamic diameter equal to or less than 10 micrometers.

(2) *Condensable PM:* Material that is vapor phase at stack conditions, but which condenses and/or reacts upon cooling and dilution in the ambient air to form solid or liquid PM immediately after discharge from the stack. Note that all condensable PM, if present from a source, is typically in the $PM_{2.5}$ size fraction, and therefore all of it is a component of both primary $PM_{2.5}$ and primary PM_{10}.

(3) *Primary $PM_{2.5}$*: The sum of filterable $PM_{2.5}$ and condensable PM.

(4) *Primary PM_{10}*: The sum of filterable PM_{10} and condensable PM.

(5) *Secondary PM:* Particles that form or grow in mass through chemical reactions in the ambient air well after dilution and condensation have occurred. Secondary PM is usually formed at some distance downwind from the source. Secondary PM should not be reported in the emission inventory and is not covered by this subpart.

Physical address means the street address of a facility. This is the address of the location where the emissions occur; not, for example, the corporate headquarters.

Point source means large, stationary (nonmobile), identifiable sources of emissions that release pollutants into the atmosphere. A point source is a facility that is a major source under 40 CFR part 70 for the pollutants for which reporting is required, except for the emissions of hazardous air pollutants, which are not considered in determining whether a source is a point source under this subpart. The minimum point source reporting thresholds in tons per year of pollutant are as follows, as measured in potential to emit:

Pollutant	Annual cycle (Type A sources)	Three-year cycle	
		Type B sources [1]	NAA sources [2]
(1) SO_X	≥2500	≥100	≥100.
(2) VOC	≥250	≥100	O_3 (moderate) ≥ 100.
(3) VOC	O_3 (serious) ≥ 50.		
(4) VOC	O_3 (severe) ≥ 25.		
(5) VOC	O_3 (extreme) ≥ 10.		
(6) NO_X	≥ 2500	≥ 100	≥ 100.
(7) CO	≥ 2500	≥1000	O_3 (all areas) ≥ 100.
(8) CO	CO (all areas) ≥ 100.		
(9) Pb	≥ 5	≥ 5.	
(10) PM_{10}	≥ 250	≥ 100	PM_{10} (moderate) ≥ 100.
(11) PM_{10}	PM_{10} (serious) ≥ 70.		
(12) $PM_{2.5}$	≥ 250	≥ 100	≥ 100.
(13) NH_3	≥ 250	≥ 100	≥ 100.

[1] Type A sources are a subset of the Type B sources and are the larger emitting sources by pollutant.
[2] NAA = Nonattainment Area. Special point source reporting thresholds apply for certain pollutants by type of nonattainment area. The pollutants by nonattainment area are: Ozone: VOC, NO_X, CO; CO: CO; PM_{10}: PM_{10}.

Pollutant code means a unique code for each reported pollutant assigned by the reporting format specified by EPA for each inventory year.

Primary capture and control efficiencies means two values indicating the emissions capture efficiency and the emission reduction efficiency of a primary control device. Capture and control efficiencies are usually expressed as a percentage.

Process ID code means a unique code for the process generating the emissions, typically a description of a process.

Roadway class means a classification system developed by the Federal Highway Administration that defines all public roadways as to type based on land use and physical characteristics of the roadway.

Rule effectiveness (RE) means a rating of how well a regulatory program achieves all possible emissions reductions. This rating reflects the assumption that controls typically are not 100 percent effective because of equipment downtime, upsets, decreases in control efficiencies, and other deficiencies in emission estimates. Rule effectiveness adjusts the control efficiency from what could be realized under ideal conditions to what is actually emitted in

practice due to less than ideal conditions.

Rule penetration means the percentage of a nonpoint source category covered by an applicable regulation.

SCC means source classification code, a process-level code that describes the equipment and/or operation which is emitting pollutants.

Site name means the name of the facility.

Spring throughput (percent) means part of the throughput or activity attributable to the three Spring months (March, April, May). See also the definition of Fall throughput.

Stack diameter means the inner physical diameter of a stack.

Stack height means physical height of a stack above the surrounding terrain.

Stack ID code means a unique code for the point where emissions from one or more processes release into the atmosphere.

Sulfur content means the sulfur content of a fuel, usually expressed as percent by weight.

Summer day emissions means an average day's emissions for a typical summer work weekday. The state will select the particular month(s) in summer and the day(s) in the work week to be represented. The selection of conditions should be coordinated with the conditions assumed in the development of reasonable further progress (RFP) plans, rate of progress plans and demonstrations, and/or emissions budgets for transportation conformity, to allow comparability of daily emission estimates.

Summer throughput (percent) means the part of throughput or activity attributable to the three Summer months (June, July, August). See also the definition of Fall throughput.

Total capture and control efficiency (percent) means the net emission reduction efficiency of all emissions collection devices.

Type A source means large point sources with actual annual emissions greater than or equal to any of the emission thresholds listed in Table 1 of Appendix A of this subpart for Type A sources. If a source is a Type A source for any pollutant listed in Table 1, then the emissions for all Table 1 pollutants must be reported for that source.

Unit ID code means a unique code for the unit of generation of emissions, typically a physical piece of or a closely related set of equipment. The EPA's reporting format for a given inventory year may require multiple unit ID codes to ensure proper matching between databases, e.g., the state's own current and most recent unit ID codes, the EPA-assigned unit ID codes if any, and the ORIS (Department of Energy) ID code if applicable.

VMT by SCC means vehicle miles traveled disaggregated to the SCC level, *i.e.*, reflecting combinations of vehicle type and roadway class. Vehicle miles traveled expresses vehicle activity and is used with emission factors. The emission factors are usually expressed in terms of grams per mile of travel. Because VMT does not correlate directly to emissions that occur while the vehicle is not moving, nonmoving emissions are incorporated into the emission factors in EPA's MOBILE Model.

VOC means volatile organic compounds. The EPA's regulatory definition of VOC is in 40 CFR 51.100.

Winter throughput (percent) means the part of throughput or activity attributable to the three winter months (January, February, December of the same year, e.g., winter 2005 is composed of January 2005, February 2005, and December 2005). See also the definition of Fall throughput.

Wk/yr in operation means weeks per year that the emitting process operates.

Work weekday means any day of the week except Saturday or Sunday.

X stack coordinate (longitude) means an object's east-west geographical coordinate.

Y stack coordinate (latitude) means an object's north-south geographical coordinate.

APPENDIX A TO SUBPART A OF PART 51—TABLES

TABLE 1 TO APPENDIX A OF SUBPART A—EMISSION THRESHOLDS BY POLLUTANT (TPY[1]) FOR TREATMENT OF POINT SOURCES AS TYPE A UNDER 40 CFR 51.30.

Pollutant	Emissions threshold for Type A treatment
(1) SO_2	≥2500.
(2) VOC	≥250.
(3) NO_X	≥2500.
(4) CO	≥2500.
(5) Pb	Does not determine Type A status.
(6) PM_{10}	≥250.
(7) $PM_{2.5}$	≥250.
(8) NH_3[2]	≥250.

[1] tpy = Tons per year of actual emissions.
[2] Ammonia threshold applies only in areas where ammonia emissions are a factor in determining whether a source is a major source, *i.e.*, where ammonia is considered a significant precursor of $PM_{2.5}$.

TABLE 2a TO APPENDIX A OF SUBPART A—DATA ELEMENTS FOR REPORTING ON EMISSIONS FROM POINT SOURCES, WHERE REQUIRED BY 40 CFR 51.30

Data elements	Every-year reporting	Three-year reporting
(1) Inventory year	✓	✓
(2) Inventory start date	✓	✓
(3) Inventory end date	✓	✓
(4) Contact name	✓	✓
(5) Contact phone number	✓	✓
(6) FIPS code	✓	✓
(7) Facility ID codes	✓	✓
(8) Unit ID code	✓	✓
(9) Process ID code	✓	✓
(10) Stack ID code	✓	✓
(11) Site name	✓	✓
(12) Physical address	✓	✓
(13) SCC	✓	✓
(14) Heat content (fuel) (annual average)	✓	✓
(15) Heat content (fuel) (ozone season, if applicable)	✓	✓
(16) Ash content (fuel) (annual average)	✓	✓
(17) Sulfur content (fuel) (annual average)	✓	✓
(18) Pollutant code	✓	✓
(19) Activity/throughput (for each period reported)	✓	✓
(20) Summer day emissions (if applicable)	✓	✓
(21) Ozone season emissions (if applicable)	✓	✓
(22) Annual emissions	✓	✓
(23) Emission factor	✓	✓
(24) Winter throughput (percent)	✓	✓
(25) Spring throughput (percent)	✓	✓
(26) Summer throughput (percent)	✓	✓
(27) Fall throughput (percent)	✓	✓
(28) Hr/day in operation	✓	✓
(29) Day/wk in operation	✓	✓
(30) Wk/yr in operation	✓	✓
(31) X stack coordinate (longitude)		✓
(32) Y stack coordinate (latitude)		✓
(33) Method accuracy description (MAD) codes		✓
(34) Stack height		✓
(35) Stack diameter		✓
(36) Exit gas temperature		✓
(37) Exit gas velocity		✓
(38) Exit gas flow rate		✓
(39) NAICS at the Facility level		✓
(40) Design capacity (including boiler capacity if applicable)		✓
(41) Maximum generator nameplate Capacity		✓
(42) Primary capture and control efficiencies (percent)		✓
(43) Total capture and control efficiency (percent)		✓
(44) Control device type		✓
(45) Emission type		✓
(46) Emission release point type		✓
(47) Rule effectiveness (percent)		✓
(48) Winter work weekday emissions of CO (if applicable)		✓

TABLE 2b TO APPENDIX A OF SUBPART A—DATA ELEMENTS FOR REPORTING ON EMISSIONS FROM NONPOINT SOURCES AND NONROAD MOBILE SOURCES, WHERE REQUIRED BY 40 CFR 51.30

Data elements	Every-year reporting	Three-year reporting
(1) Inventory year	✓	✓
(2) Inventory start date	✓	✓
(3) Inventory end date	✓	✓
(4) Contact name	✓	✓
(5) Contact phone number	✓	✓
(6) FIPS code	✓	✓
(7) SCC	✓	✓
(8) Emission factor	✓	✓
(9) Activity/throughput level (for each period reported)	✓	✓
(10) Total capture/control efficiency (percent)	✓	✓
(11) Rule effectiveness (percent)	✓	✓
(12) Rule penetration (percent)	✓	✓
(13) Pollutant code	✓	✓
(14) Ozone season emissions (if applicable)	✓	✓
(15) Summer day emissions (if applicable)	✓	✓
(16) Annual emissions	✓	✓
(17) Winter throughput (percent)	✓	✓
(18) Spring throughput (percent)	✓	✓
(19) Summer throughput (percent)	✓	✓
(20) Fall throughput (percent)	✓	✓
(21) Hrs/day in operation	✓	✓
(22) Days/wk in operation	✓	✓
(23) Wks/yr in operation	✓	✓
(24) Winter work weekday emissions of CO (if applicable)		✓

TABLE 2c TO APPENDIX A OF SUBPART A—DATA ELEMENTS FOR REPORTING ON EMISSIONS FROM ONROAD MOBILE SOURCES, WHERE REQUIRED BY 40 CFR 51.30

Data elements	Every-year reporting	Three-year reporting
1. Inventory year	✓	✓
2. Inventory start date	✓	✓
3. Inventory end date	✓	✓
4. Contact name	✓	✓
5. Contact phone number	✓	✓
6. FIPS code	✓	✓
7. SCC	✓	✓
8. Emission factor	✓	✓
9. Activity (VMT by SCC)	✓	✓
10. Pollutant code	✓	✓
11. Ozone season emissions (if applicable)	✓	✓
12. Summer day emissions (if applicable)	✓	✓
13. Annual emissions	✓	✓
14. Winter throughput (percent)	✓	✓
15. Spring throughput (percent)	✓	✓
16. Summer throughput (percent)	✓	✓
17. Fall throughput (percent)	✓	✓
18. Winter work weekday emissions of CO (if applicable)		✓

Subparts B–E [Reserved]

Subpart F—Procedural Requirements

AUTHORITY: 42 U.S.C. 7401, 7411, 7412, 7413, 7414, 7470–7479, 7501–7508, 7601, and 7602.

§51.100 Definitions.

As used in this part, all terms not defined herein will have the meaning given them in the Act:

(a) *Act* means the Clean Air Act (42 U.S.C. 7401 *et seq.*, as amended by Pub. L. 91–604, 84 Stat. 1676 Pub. L. 95–95, 91 Stat., 685 and Pub. L. 95–190, 91 Stat., 1399.)

(b) *Administrator* means the Administrator of the Environmental Protection Agency (EPA) or an authorized representative.

(c) *Primary standard* means a national primary ambient air quality standard

promulgated pursuant to section 109 of the Act.

(d) *Secondary standard* means a national secondary ambient air quality standard promulgated pursuant to section 109 of the Act.

(e) *National standard* means either a primary or secondary standard.

(f) *Owner or operator* means any person who owns, leases, operates, controls, or supervises a facility, building, structure, or installation which directly or indirectly result or may result in emissions of any air pollutant for which a national standard is in effect.

(g) *Local agency* means any local government agency other than the State agency, which is charged with responsibility for carrying out a portion of the plan.

(h) *Regional Office* means one of the ten (10) EPA Regional Offices.

(i) *State agency* means the air pollution control agency primarily responsible for development and implementation of a plan under the Act.

(j) *Plan* means an implementation plan approved or promulgated under section 110 of 172 of the Act.

(k) *Point source* means the following:

(1) For particulate matter, sulfur oxides, carbon monoxide, volatile organic compounds (VOC) and nitrogen dioxide—

(i) Any stationary source the actual emissions of which are in excess of 90.7 metric tons (100 tons) per year of the pollutant in a region containing an area whose 1980 *urban place* population, as defined by the U.S. Bureau of the Census, was equal to or greater than 1 million.

(ii) Any stationary source the actual emissions of which are in excess of 22.7 metric tons (25 tons) per year of the pollutant in a region containing an area whose 1980 *urban place* population, as defined by the U.S. Bureau of the Census, was less than 1 million; or

(2) For lead or lead compounds measured as elemental lead, any stationary source that actually emits a total of 4.5 metric tons (5 tons) per year or more.

(l) *Area source* means any small residential, governmental, institutional, commercial, or industrial fuel combustion operations; onsite solid waste disposal facility; motor vehicles, aircraft vessels, or other transportation facilities or other miscellaneous sources identified through inventory techniques similar to those described in the ''AEROS Manual series, Vol. II AEROS User's Manual,'' EPA–450/2–76–029 December 1976.

(m) *Region* means an area designated as an air quality control region (AQCR) under section 107(c) of the Act.

(n) *Control strategy* means a combination of measures designated to achieve the aggregate reduction of emissions necessary for attainment and maintenance of national standards including, but not limited to, measures such as:

(1) Emission limitations.

(2) Federal or State emission charges or taxes or other economic incentives or disincentives.

(3) Closing or relocation of residential, commercial, or industrial facilities.

(4) Changes in schedules or methods of operation of commercial or industrial facilities or transportation systems, including, but not limited to, short-term changes made in accordance with standby plans.

(5) Periodic inspection and testing of motor vehicle emission control systems, at such time as the Administrator determines that such programs are feasible and practicable.

(6) Emission control measures applicable to in-use motor vehicles, including, but not limited to, measures such as mandatory maintenance, installation of emission control devices, and conversion to gaseous fuels.

(7) Any transportation control measure including those transportation measures listed in section 108(f) of the Clean Air Act as amended.

(8) Any variation of, or alternative to any measure delineated herein.

(9) Control or prohibition of a fuel or fuel additive used in motor vehicles, if such control or prohibition is necessary to achieve a national primary or secondary air quality standard and is approved by the Administrator under section 211(c)(4)(C) of the Act.

(o) *Reasonably available control technology (RACT)* means devices, systems, process modifications, or other apparatus or techniques that are reasonably available taking into account:

(1) The necessity of imposing such controls in order to attain and maintain a national ambient air quality standard;

(2) The social, environmental, and economic impact of such controls; and

(3) Alternative means of providing for attainment and maintenance of such standard. (This provision defines RACT for the purposes of § 51.341(b) only.)

(p) *Compliance schedule* means the date or dates by which a source or category of sources is required to comply with specific emission limitations contained in an implementation plan and with any increments of progress toward such compliance.

(q) *Increments of progress* means steps toward compliance which will be taken by a specific source, including:

(1) Date of submittal of the source's final control plan to the appropriate air pollution control agency;

(2) Date by which contracts for emission control systems or process modifications will be awarded; or date by which orders will be issued for the purchase of component parts to accomplish emission control or process modification;

(3) Date of initiation of on-site construction or installation of emission control equipment or process change;

(4) Date by which on-site construction or installation of emission control equipment or process modification is to be completed; and

(5) Date by which final compliance is to be achieved.

(r) *Transportation control measure* means any measure that is directed toward reducing emissions of air pollutants from transportation sources. Such measures include, but are not limited to, those listed in section 108(f) of the Clean Air Act.

(s) *Volatile organic compounds (VOC)* means any compound of carbon, excluding carbon monoxide, carbon dioxide, carbonic acid, metallic carbides or carbonates, and ammonium carbonate, which participates in atmospheric photochemical reactions.

(1) This includes any such organic compound other than the following, which have been determined to have negligible photochemical reactivity: methane; ethane; methylene chloride (dichloromethane); 1,1,1-trichloroethane (methyl chloroform); 1,1,2-trichloro-1,2,2-trifluoroethane (CFC–113); trichlorofluoromethane (CFC–11); dichlorodifluoromethane (CFC–12); chlorodifluoromethane (HCFC–22); trifluoromethane (HFC–23); 1,2-dichloro 1,1,2,2-tetrafluoroethane (CFC–114); chloropentafluoroethane (CFC–115); 1,1,1-trifluoro 2,2-dichloroethane (HCFC–123); 1,1,1,2-tetrafluoroethane (HFC–134a); 1,1-dichloro 1-fluoroethane (HCFC–141b); 1-chloro 1,1-difluoroethane (HCFC–142b); 2-chloro-1,1,1,2-tetrafluoroethane (HCFC–124); pentafluoroethane (HFC–125); 1,1,2,2-tetrafluoroethane (HFC–134); 1,1,1-trifluoroethane (HFC–143a); 1,1-difluoroethane (HFC–152a); parachlorobenzotrifluoride (PCBTF); cyclic, branched, or linear completely methylated siloxanes; acetone; perchloroethylene (tetrachloroethylene); 3,3-dichloro-1,1,1,2,2-pentafluoropropane (HCFC–225ca); 1,3-dichloro-1,1,2,2,3-pentafluoropropane (HCFC–225cb); 1,1,1,2,3,4,4,5,5,5-decafluoropentane (HFC 43–10mee); difluoromethane (HFC–32); ethylfluoride (HFC–161); 1,1,1,3,3,3-hexafluoropropane (HFC–236fa); 1,1,2,2,3-pentafluoropropane (HFC–245ca); 1,1,2,3,3-pentafluoropropane (HFC–245ea); 1,1,1,2,3-pentafluoropropane (HFC–245eb); 1,1,1,3,3-pentafluoropropane (HFC–245fa); 1,1,1,2,3,3-hexafluoropropane (HFC–236ea); 1,1,1,3,3-pentafluorobutane (HFC–365mfc); chlorofluoromethane (HCFC–31); 1 chloro-1-fluoroethane (HCFC–151a); 1,2-dichloro-1,1,2-trifluoroethane (HCFC–123a); 1,1,1,2,2,3,3,4,4-nonafluoro-4-methoxy-butane ($C_4F_9OCH_3$ or HFE–7100); 2-(difluoromethoxymethyl)-1,1,1,2,3,3,3-heptafluoropropane ($(CF_3)_2CFCF_2OCH_3$); 1-ethoxy-1,1,2,2,3,3,4,4,4-nonafluorobutane ($C_4F_9OC_2H_5$ or HFE–7200); 2-(ethoxydifluoromethyl)-1,1,1,2,3,3,3-heptafluoropropane ($(CF_3)_2CFCF_2OC_2H_5$); methyl acetate; 1,1,1,2,2,3,3-heptafluoro-3-methoxy-propane (n-C3F7OCH3, HFE–7000); 3-ethoxy- 1,1,1,2,3,4,4,5,5,6,6,6-dodecafluoro-2-(trifluoromethyl) hexane (HFE–7500); 1,1,1,2,3,3,3-heptafluoropropane (HFC 227ea); methyl formate (HCOOCH3); 1,1,1,2,2,3,4,5,5,5-decafluoro-3-methoxy-4-

trifluoromethyl-pentane (HFE–7300); propylene carbonate; dimethyl carbonate; *trans*-1,3,3,3-tetrafluoropropene; HCF_2OCF_2H (HFE–134); $HCF_2OCF_2OCF_2H$ (HFE–236cal2); $HCF_2OCF_2CF_2OCF_2H$ (HFE–338pcc13); $HCF_2OCF_2OCF_2CF_2OCF_2H$ (H-Galden 1040x or H-Galden ZT 130 (or 150 or 180)); *trans* 1-chloro-3,3,3-trifluoroprop-1-ene; 2,3,3,3-tetrafluoropropene; 2-amino-2-methyl-1-propanol; and perfluorocarbon compounds which fall into these classes:

(i) Cyclic, branched, or linear, completely fluorinated alkanes;

(ii) Cyclic, branched, or linear, completely fluorinated ethers with no unsaturations;

(iii) Cyclic, branched, or linear, completely fluorinated tertiary amines with no unsaturations; and

(iv) Sulfur containing perfluorocarbons with no unsaturations and with sulfur bonds only to carbon and fluorine.

(2) For purposes of determining compliance with emissions limits, VOC will be measured by the test methods in the approved State implementation plan (SIP) or 40 CFR part 60, appendix A, as applicable. Where such a method also measures compounds with negligible photochemical reactivity, these negligibility-reactive compounds may be excluded as VOC if the amount of such compounds is accurately quantified, and such exclusion is approved by the enforcement authority.

(3) As a precondition to excluding these compounds as VOC or at any time thereafter, the enforcement authority may require an owner or operator to provide monitoring or testing methods and results demonstrating, to the satisfaction of the enforcement authority, the amount of negligibly-reactive compounds in the source's emissions.

(4) For purposes of Federal enforcement for a specific source, the EPA shall use the test methods specified in the applicable EPA-approved SIP, in a permit issued pursuant to a program approved or promulgated under title V of the Act, or under 40 CFR part 51, subpart I or appendix S, or under 40 CFR parts 52 or 60. The EPA shall not be bound by any State determination as to appropriate methods for testing or monitoring negligibly-reactive compounds if such determination is not reflected in any of the above provisions.

(5) The following compound(s) are VOC for purposes of all recordkeeping, emissions reporting, photochemical dispersion modeling and inventory requirements which apply to VOC and shall be uniquely identified in emission reports, but are not VOC for purposes of VOC emissions limitations or VOC content requirements: t-butyl acetate.

(6) For the purposes of determining compliance with California's aerosol coatings reactivity-based regulation, (as described in the California Code of Regulations, Title 17, Division 3, Chapter 1, Subchapter 8.5, Article 3), any organic compound in the volatile portion of an aerosol coating is counted towards that product's reactivity-based limit. Therefore, the compounds identified in paragraph (s) of this section as negligibly reactive and excluded from EPA's definition of VOCs are to be counted towards a product's reactivity limit for the purposes of determining compliance with California's aerosol coatings reactivity-based regulation.

(7) For the purposes of determining compliance with EPA's aerosol coatings reactivity based regulation (as described in 40 CFR part 59—National Volatile Organic Compound Emission Standards for Consumer and Commercial Products) any organic compound in the volatile portion of an aerosol coating is counted towards the product's reactivity-based limit, as provided in 40 CFR part 59, subpart E. Therefore, the compounds that are used in aerosol coating products and that are identified in paragraphs (s)(1) or (s)(5) of this section as excluded from EPA's definition of VOC are to be counted towards a product's reactivity limit for the purposes of determining compliance with EPA's aerosol coatings reactivity-based national regulation, as provided in 40 CFR part 59, subpart E.

(t)–(w) [Reserved]

(x) *Time period* means any period of time designated by hour, month, season, calendar year, averaging time, or other suitable characteristics, for which ambient air quality is estimated.

(y) *Variance* means the temporary deferral of a final compliance date for an

individual source subject to an approved regulation, or a temporary change to an approved regulation as it applies to an individual source.

(z) *Emission limitation* and *emission standard* mean a requirement established by a State, local government, or the Administrator which limits the quantity, rate, or concentration of emissions of air pollutants on a continuous basis, including any requirements which limit the level of opacity, prescribe equipment, set fuel specifications, or prescribe operation or maintenance procedures for a source to assure continuous emission reduction.

(aa) *Capacity factor* means the ratio of the average load on a machine or equipment for the period of time considered to the capacity rating of the machine or equipment.

(bb) *Excess emissions* means emissions of an air pollutant in excess of an emission standard.

(cc) *Nitric acid plant* means any facility producing nitric acid 30 to 70 percent in strength by either the pressure or atmospheric pressure process.

(dd) *Sulfuric acid plant* means any facility producing sulfuric acid by the contact process by burning elemental sulfur, alkylation acid, hydrogen sulfide, or acid sludge, but does not include facilities where conversion to sulfuric acid is utilized primarily as a means of preventing emissions to the atmosphere of sulfur dioxide or other sulfur compounds.

(ee) *Fossil fuel-fired steam generator* means a furnance or bioler used in the process of burning fossil fuel for the primary purpose of producing steam by heat transfer.

(ff) *Stack* means any point in a source designed to emit solids, liquids, or gases into the air, including a pipe or duct but not including flares.

(gg) *A stack in existence* means that the owner or operator had (1) begun, or caused to begin, a continuous program of physical on-site construction of the stack or (2) entered into binding agreements or contractual obligations, which could not be cancelled or modified without substantial loss to the owner or operator, to undertake a program of construction of the stack to be completed within a reasonable time.

(hh)(1) *Dispersion technique* means any technique which attempts to affect the concentration of a pollutant in the ambient air by:

(i) Using that portion of a stack which exceeds good engineering practice stack height:

(ii) Varying the rate of emission of a pollutant according to atmospheric conditions or ambient concentrations of that pollutant; or

(iii) Increasing final exhaust gas plume rise by manipulating source process parameters, exhaust gas parameters, stack parameters, or combining exhaust gases from several existing stacks into one stack; or other selective handling of exhaust gas streams so as to increase the exhaust gas plume rise.

(2) The preceding sentence does not include:

(i) The reheating of a gas stream, following use of a pollution control system, for the purpose of returning the gas to the temperature at which it was originally discharged from the facility generating the gas stream;

(ii) The merging of exhaust gas streams where:

(A) The source owner or operator demonstrates that the facility was originally designed and constructed with such merged gas streams;

(B) After July 8, 1985 such merging is part of a change in operation at the facility that includes the installation of pollution controls and is accompanied by a net reduction in the allowable emissions of a pollutant. This exclusion from the definition of *dispersion techniques* shall apply only to the emission limitation for the pollutant affected by such change in operation; or

(C) Before July 8, 1985, such merging was part of a change in operation at the facility that included the installation of emissions control equipment or was carried out for sound economic or engineering reasons. Where there was an increase in the emission limitation or, in the event that no emission limitation was in existence prior to the merging, an increase in the quantity of pollutants actually emitted prior to the merging, the reviewing agency shall presume that merging was significantly motivated by an intent to gain emissions credit for greater dispersion.

Absent a demonstration by the source owner or operator that merging was not significantly motivated by such intent, the reviewing agency shall deny credit for the effects of such merging in calculating the allowable emissions for the source;

(iii) Smoke management in agricultural or silvicultural prescribed burning programs;

(iv) Episodic restrictions on residential woodburning and open burning; or

(v) Techniques under § 51.100(hh)(1)(iii) which increase final exhaust gas plume rise where the resulting allowable emissions of sulfur dioxide from the facility do not exceed 5,000 tons per year.

(ii) *Good engineering practice* (GEP) stack height means the greater of:

(1) 65 meters, measured from the ground-level elevation at the base of the stack:

(2)(i) For stacks in existence on January 12, 1979, and for which the owner or operator had obtained all applicable permits or approvals required under 40 CFR parts 51 and 52.

$$H_g = 2.5H,$$

provided the owner or operator produces evidence that this equation was actually relied on in establishing an emission limitation:

(ii) For all other stacks,

$$H_g = H + 1.5L$$

where:

H_g = good engineering practice stack height, measured from the ground-level elevation at the base of the stack,

H = height of nearby structure(s) measured from the ground-level elevation at the base of the stack.

L = lesser dimension, height or projected width, of nearby structure(s)

provided that the EPA, State or local control agency may require the use of a field study or fluid model to verify GEP stack height for the source; or

(3) The height demonstrated by a fluid model or a field study approved by the EPA State or local control agency, which ensures that the emissions from a stack do not result in excessive concentrations of any air pollutant as a result of atmospheric downwash, wakes, or eddy effects created by the source itself, nearby structures or nearby terrain features.

(jj) *Nearby* as used in § 51.100(ii) of this part is defined for a specific structure or terrain feature and

(1) For purposes of applying the formulae provided in § 51.100(ii)(2) means that distance up to five times the lesser of the height or the width dimension of a structure, but not greater than 0.8 km (½ mile), and

(2) For conducting demonstrations under § 51.100(ii)(3) means not greater than 0.8 km (½ mile), except that the portion of a terrain feature may be considered to be nearby which falls within a distance of up to 10 times the maximum height (H_t) of the feature, not to exceed 2 miles if such feature achieves a height (H_t) 0.8 km from the stack that is at least 40 percent of the GEP stack height determined by the formulae provided in § 51.100(ii)(2)(ii) of this part or 26 meters, whichever is greater, as measured from the ground-level elevation at the base of the stack. The height of the structure or terrain feature is measured from the ground-level elevation at the base of the stack.

(kk) *Excessive concentration* is defined for the purpose of determining good engineering practice stack height under § 51.100(ii)(3) and means:

(1) For sources seeking credit for stack height exceeding that established under § 51.100(ii)(2) a maximum ground-level concentration due to emissions from a stack due in whole or part to downwash, wakes, and eddy effects produced by nearby structures or nearby terrain features which individually is at least 40 percent in excess of the maximum concentration experienced in the absence of such downwash, wakes, or eddy effects and which contributes to a total concentration due to emissions from all sources that is greater than an ambient air quality standard. For sources subject to the prevention of significant deterioration program (40 CFR 51.166 and 52.21), an excessive concentration alternatively means a maximum ground-level concentration due to emissions from a stack due in whole or part to downwash, wakes, or eddy effects produced by nearby structures or nearby terrain features which individually is at least 40 percent in excess of the

maximum concentration experienced in the absence of such downwash, wakes, or eddy effects and greater than a prevention of significant deterioration increment. The allowable emission rate to be used in making demonstrations under this part shall be prescribed by the new source performance standard that is applicable to the source category unless the owner or operator demonstrates that this emission rate is infeasible. Where such demonstrations are approved by the authority administering the State implementation plan, an alternative emission rate shall be established in consultation with the source owner or operator.

(2) For sources seeking credit after October 11, 1983, for increases in existing stack heights up to the heights established under §51.100(ii)(2), either (i) a maximum ground-level concentration due in whole or part to downwash, wakes or eddy effects as provided in paragraph (kk)(1) of this section, except that the emission rate specified by any applicable State implementation plan (or, in the absence of such a limit, the actual emission rate) shall be used, or (ii) the actual presence of a local nuisance caused by the existing stack, as determined by the authority administering the State implementation plan; and

(3) For sources seeking credit after January 12, 1979 for a stack height determined under §51.100(ii)(2) where the authority administering the State implementation plan requires the use of a field study or fluid model to verify GEP stack height, for sources seeking stack height credit after November 9, 1984 based on the aerodynamic influence of cooling towers, and for sources seeking stack height credit after December 31, 1970 based on the aerodynamic influence of structures not adequately represented by the equations in §51.100(ii)(2), a maximum ground-level concentration due in whole or part to downwash, wakes or eddy effects that is at least 40 percent in excess of the maximum concentration experienced in the absence of such downwash, wakes, or eddy effects.

(ll)–(mm) [Reserved]

(nn) Intermittent control system (ICS) means a dispersion technique which varies the rate at which pollutants are emitted to the atmosphere according to meteorological conditions and/or ambient concentrations of the pollutant, in order to prevent ground-level concentrations in excess of applicable ambient air quality standards. Such a dispersion technique is an ICS whether used alone, used with other dispersion techniques, or used as a supplement to continuous emission controls (*i.e.*, used as a supplemental control system).

(oo) *Particulate matter* means any airborne finely divided solid or liquid material with an aerodynamic diameter smaller than 100 micrometers.

(pp) *Particulate matter emissions* means all finely divided solid or liquid material, other than uncombined water, emitted to the ambient air as measured by applicable reference methods, or an equivalent or alternative method, specified in this chapter, or by a test method specified in an approved State implementation plan.

(qq) PM_{10} means particulate matter with an aerodynamic diameter less than or equal to a nominal 10 micrometers as measured by a reference method based on appendix J of part 50 of this chapter and designated in accordance with part 53 of this chapter or by an equivalent method designated in accordance with part 53 of this chapter.

(rr) PM_{10} *emissions* means finely divided solid or liquid material, with an aerodynamic diameter less than or equal to a nominal 10 micrometers emitted to the ambient air as measured by an applicable reference method, or an equivalent or alternative method, specified in this chapter or by a test method specified in an approved State implementation plan.

(ss) *Total suspended particulate* means particulate matter as measured by the method described in appendix B of part 50 of this chapter.

[51 FR 40661, Nov. 7, 1986]

EDITORIAL NOTE: For FEDERAL REGISTER citations affecting §51.100, see the List of CFR Sections Affected, which appears in the Finding Aids section of the printed volume and at *www.fdsys.gov*.

§51.101 Stipulations.

Nothing in this part will be construed in any manner:

(a) To encourage a State to prepare, adopt, or submit a plan which does not provide for the protection and enhancement of air quality so as to promote the public health and welfare and productive capacity.

(b) To encourage a State to adopt any particular control strategy without taking into consideration the cost-effectiveness of such control strategy in relation to that of alternative control strategies.

(c) To preclude a State from employing techniques other than those specified in this part for purposes of estimating air quality or demonstrating the adequacy of a control strategy, provided that such other techniques are shown to be adequate and appropriate for such purposes.

(d) To encourage a State to prepare, adopt, or submit a plan without taking into consideration the social and economic impact of the control strategy set forth in such plan, including, but not limited to, impact on availability of fuels, energy, transportation, and employment.

(e) To preclude a State from preparing, adopting, or submitting a plan which provides for attainment and maintenance of a national standard through the application of a control strategy not specifically identified or described in this part.

(f) To preclude a State or political subdivision thereof from adopting or enforcing any emission limitations or other measures or combinations thereof to attain and maintain air quality better than that required by a national standard.

(g) To encourage a State to adopt a control strategy uniformly applicable throughout a region unless there is no satisfactory alternative way of providing for attainment and maintenance of a national standard throughout such region.

[61 FR 30163, June 14, 1996]

§ 51.102 Public hearings.

(a) Except as otherwise provided in paragraph (c) of this section and within the 30 day notification period as required by paragraph (d) of this section, States must provide notice, provide the opportunity to submit written comments and allow the public the opportunity to request a public hearing. The State must hold a public hearing or provide the public the opportunity to request a public hearing. The notice announcing the 30 day notification period must include the date, place and time of the public hearing. If the State provides the public the opportunity to request a public hearing and a request is received the State must hold the scheduled hearing or schedule a public hearing (as required by paragraph (d) of this section). The State may cancel the public hearing through a method it identifies if no request for a public hearing is received during the 30 day notification period and the original notice announcing the 30 day notification period clearly states: *If no request for a public hearing is received the hearing will be cancelled; identifies the method and time for announcing that the hearing has been cancelled; and provides a contact phone number for the public to call to find out if the hearing has been cancelled.* These requirements apply for adoption and submission to EPA of:

(1) Any plan or revision of it required by § 51.104(a).

(2) Any individual compliance schedule under (§ 51.260).

(3) Any revision under § 51.104(d).

(b) Separate hearings may be held for plans to implement primary and secondary standards.

(c) No hearing will be required for any change to an increment of progress in an approved individual compliance schedule unless such change is likely to cause the source to be unable to comply with the final compliance date in the schedule. The requirements of §§ 51.104 and 51.105 will be applicable to such schedules, however.

(d) Any hearing required by paragraph (a) of this section will be held only after reasonable notice, which will be considered to include, at least 30 days prior to the date of such hearing(s):

(1) Notice given to the public by prominent advertisement in the area affected announcing the date(s), time(s), and place(s) of such hearing(s);

(2) Availability of each proposed plan or revision for public inspection in at least one location in each region to which it will apply, and the availability of each compliance schedule for

public inspection in at least one location in the region in which the affected source is located;

(3) Notification to the Administrator (through the appropriate Regional Office);

(4) Notification to each local air pollution control agency which will be significantly impacted by such plan, schedule or revision;

(5) In the case of an interstate region, notification to any other States included, in whole or in part, in the regions which are significantly impacted by such plan or schedule or revision.

(e) The State must prepare and retain, for inspection by the Administrator upon request, a record of each hearing. The record must contain, as a minimum, a list of witnesses together with the text of each presentation.

(f) The State must submit with the plan, revision, or schedule, a certification that the requirements in paragraph (a) and (d) of this section were met. Such certification will include the date and place of any public hearing(s) held or that no public hearing was requested during the 30 day notification period.

(g) Upon written application by a State agency (through the appropriate Regional Office), the Administrator may approve State procedures for public hearings. The following criteria apply:

(1) Procedures approved under this section shall be deemed to satisfy the requirement of this part regarding public hearings.

(2) Procedures different from this part may be approved if they—

(i) Ensure public participation in matters for which hearings are required; and

(ii) Provide adequate public notification of the opportunity to participate.

(3) The Administrator may impose any conditions on approval he or she deems necessary.

[36 FR 22938, Nov. 25, 1971, as amended at 65 FR 8657, Feb. 22, 2000; 72 FR 38792, July 16, 2007]

§ 51.103 Submission of plans, preliminary review of plans.

(a) The State makes an official plan submission to EPA only when the submission conforms to the requirements of appendix V to this part, and the State delivers five hard copies or at least two hard copies with an electronic version of the hard copy (unless otherwise agreed to by the State and Regional Office) of the plan to the appropriate Regional Office, with a letter giving notice of such action. If the State submits an electronic copy, it must be an exact duplicate of the hard copy.

(b) Upon request of a State, the Administrator will provide preliminary review of a plan or portion thereof submitted in advance of the date such plan is due. Such requests must be made in writing to the appropriate Regional Office, must indicate changes (such as, redline/strikethrough) to the existing approved plan, where applicable and must be accompanied by five hard copies or at least two hard copies with an electronic version of the hard copy (unless otherwise agreed to by the State and Regional Office). Requests for preliminary review do not relieve a State of the responsibility of adopting and submitting plans in accordance with prescribed due dates.

[72 FR 38792, July 16, 2007]

§ 51.104 Revisions.

(a) States may revise the plan from time to time consistent with the requirements applicable to implementation plans under this part.

(b) The States must submit any revision of any regulation or any compliance schedule under paragraph (c) of this section to the Administrator no later than 60 days after its adoption.

(c) EPA will approve revisions only after applicable hearing requirements of § 51.102 have been satisfied.

(d) In order for a variance to be considered for approval as a revision to the State implementation plan, the State must submit it in accordance with the requirements of this section.

[51 FR 40661, Nov. 7, 1986, as amended at 61 FR 16060, Apr. 11, 1996]

§ 51.105 Approval of plans.

Revisions of a plan, or any portion thereof, will not be considered part of an applicable plan until such revisions

have been approved by the Administrator in accordance with this part.

[51 FR 40661, Nov. 7, 1986, as amended at 60 FR 33922, June 29, 1995]

Subpart G—Control Strategy

SOURCE: 51 FR 40665, Nov. 7, 1986, unless otherwise noted.

§ 51.110 Attainment and maintenance of national standards.

(a) Each plan providing for the attainment of a primary or secondary standard must specify the projected attainment date.

(b)–(f) [Reserved]

(g) During developing of the plan, EPA encourages States to identify alternative control strategies, as well as the costs and benefits of each such alternative for attainment or maintenance of the national standard.

[51 FR 40661 Nov. 7, 1986 as amended at 61 FR 16060, Apr. 11, 1996; 61 FR 30163, June 14, 1996]

§ 51.111 Description of control measures.

Each plan must set forth a control strategy which includes the following:

(a) A description of enforcement methods including, but not limited to:

(1) Procedures for monitoring compliance with each of the selected control measures,

(2) Procedures for handling violations, and

(3) A designation of agency responsibility for enforcement of implementation.

(b) [Reserved]

[51 FR 40665, Nov. 7, 1986, as amended at 60 FR 33922, June 29, 1995]

§ 51.112 Demonstration of adequacy.

(a) Each plan must demonstrate that the measures, rules, and regulations contained in it are adequate to provide for the timely attainment and maintenance of the national standard that it implements.

(1) The adequacy of a control strategy shall be demonstrated by means of applicable air quality models, data bases, and other requirements specified in appendix W of this part (Guideline on Air Quality Models).

(2) Where an air quality model specified in appendix W of this part (Guideline on Air Quality Models) is inappropriate, the model may be modified or another model substituted. Such a modification or substitution of a model may be made on a case-by-case basis or, where appropriate, on a generic basis for a specific State program. Written approval of the Administrator must be obtained for any modification or substitution. In addition, use of a modified or substituted model must be subject to notice and opportunity for public comment under procedures set forth in § 51.102.

(b) The demonstration must include the following:

(1) A summary of the computations, assumptions, and judgments used to determine the degree of reduction of emissions (or reductions in the growth of emissions) that will result from the implementation of the control strategy.

(2) A presentation of emission levels expected to result from implementation of each measure of the control strategy.

(3) A presentation of the air quality levels expected to result from implementation of the overall control strategy presented either in tabular form or as an isopleth map showing expected maximum pollutant concentrations.

(4) A description of the dispersion models used to project air quality and to evaluate control strategies.

(5) For interstate regions, the analysis from each constituent State must, where practicable, be based upon the same regional emission inventory and air quality baseline.

[51 FR 40665, Nov. 7, 1986, as amended at 58 FR 38821, July 20, 1993; 60 FR 40468, Aug. 9, 1995; 61 FR 41840, Aug. 12, 1996]

§ 51.113 [Reserved]

§ 51.114 Emissions data and projections.

(a) Except for lead, each plan must contain a detailed inventory of emissions from point and area sources. Lead requirements are specified in § 51.117. The inventory must be based upon measured emissions or, where measured emissions are not available, documented emission factors.

(b) Each plan must contain a summary of emission levels projected to result from application of the new control strategy.

(c) Each plan must identify the sources of the data used in the projection of emissions.

§51.115 Air quality data and projections.

(a) Each plan must contain a summary of data showing existing air quality.

(b) Each plan must:

(1) Contain a summary of air quality concentrations expected to result from application of the control strategy, and

(2) Identify and describe the dispersion model, other air quality model, or receptor model used.

(c) Actual measurements of air quality must be used where available if made by methods specified in appendix C to part 58 of this chapter. Estimated air quality using appropriate modeling techniques may be used to supplement measurements.

(d) For purposes of developing a control strategy, background concentration shall be taken into consideration with respect to particulate matter. As used in this subpart, background concentration is that portion of the measured ambient levels that cannot be reduced by controlling emissions from man-made sources.

(e) In developing an ozone control strategy for a particular area, background ozone concentrations and ozone transported into an area must be considered. States may assume that the ozone standard will be attained in upwind areas.

§51.116 Data availability.

(a) The State must retain all detailed data and calculations used in the preparation of each plan or each plan revision, and make them available for public inspection and submit them to the Administrator at his request.

(b) The detailed data and calculations used in the preparation of plan revisions are not considered a part of the plan.

(c) Each plan must provide for public availability of emission data reported by source owners or operators or otherwise obtained by a State or local agency. Such emission data must be correlated with applicable emission limitations or other measures. As used in this paragraph, *correlated* means presented in such a manner as to show the relationship between measured or estimated amounts of emissions and the amounts of such emissions allowable under the applicable emission limitations or other measures.

§51.117 Additional provisions for lead.

In addition to other requirements in §§51.100 through 51.116 the following requirements apply to lead. To the extent they conflict, there requirements are controlling over those of the proceeding sections.

(a) *Control strategy demonstration.* Each plan must contain a demonstration showing that the plan will attain and maintain the standard in the following areas:

(1) Areas in the vicinity of the following point sources of lead: Primary lead smelters, Secondary lead smelters, Primary copper smelters, Lead gasoline additive plants, Lead-acid storage battery manufacturing plants that produce 2,000 or more batteries per day. Any other stationary source that actually emits 25 or more tons per year of lead or lead compounds measured as elemental lead.

(2) Any other area that has lead air concentrations in excess of the national ambient air quality standard concentration for lead, measured since January 1, 1974.

(b) *Time period for demonstration of adequacy.* The demonstration of adequacy of the control strategy required under §51.112 may cover a longer period if allowed by the appropriate EPA Regional Administrator.

(c) *Special modeling provisions.* (1) For urbanized areas with measured lead concentrations in excess of 4.0 $\mu g/m^3$, quarterly mean measured since January 1, 1974, the plan must employ the modified rollback model for the demonstration of attainment as a minimum, but may use an atmospheric dispersion model if desired, consistent with requirements contained in §51.112(a). If a proportional model is used, the air quality data should be the same year as the emissions inventory required under the paragraph e.

(2) For each point source listed in § 51.117(a), that plan must employ an atmospheric dispersion model for demonstration of attainment, consistent with requirements contained in § 51.112(a).

(3) For each area in the vicinity of an air quality monitor that has recorded lead concentrations in excess of the lead national standard concentration, the plan must employ the modified rollback model as a minimum, but may use an atmospheric dispersion model if desired for the demonstration of attainment, consistent with requirements contained in § 51.112(a).

(d) *Air quality data and projections.* (1) Each State must submit to the appropriate EPA Regional Office with the plan, but not part of the plan, all lead air quality data measured since January 1, 1974. This requirement does not apply if the data has already been submitted.

(2) The data must be submitted in accordance with the procedures and data forms specified in Chapter 3.4.0 of the ''AEROS User's Manual'' concerning storage and retrieval of aerometric data (SAROAD) except where the Regional Administrator waives this requirement.

(3) If additional lead air quality data are desired to determine lead air concentrations in areas suspected of exceeding the lead national ambient air quality standard, the plan may include data from any previously collected filters from particulate matter high volume samplers. In determining the lead content of the filters for control strategy demonstration purposes, a State may use, in addition to the reference method, X-ray fluorescence or any other method approved by the Regional Administrator.

(e) *Emissions data.* (1) The point source inventory on which the summary of the baseline for lead emissions inventory is based must contain all sources that emit 0.5 or more tons of lead per year.

(2) Each State must submit lead emissions data to the appropriate EPA Regional Office with the original plan. The submission must be made with the plan, but not as part of the plan, and must include emissions data and information related to point and area source emissions. The emission data and information should include the information identified in the Hazardous and Trace Emissions System (HATREMS) point source coding forms for all point sources and the area source coding forms for all sources that are not point sources, but need not necessarily be in the format of those forms.

[41 FR 18388, May 3, 1976, as amended at 58 FR 38822, July 20, 1993; 73 FR 67057, Nov. 12, 2008]

§ 51.118 Stack height provisions.

(a) The plan must provide that the degree of emission limitation required of any source for control of any air pollutant must not be affected by so much of any source's stack height that exceeds good engineering practice or by any other dispersion technique, except as provided in § 51.118(b). The plan must provide that before a State submits to EPA a new or revised emission limitation that is based on a good engineering practice stack height that exceeds the height allowed by § 51.100(ii) (1) or (2), the State must notify the public of the availabilty of the demonstration study and must provide opportunity for a public hearing on it. This section does not require the plan to restrict, in any manner, the actual stack height of any source.

(b) The provisions of § 51.118(a) shall not apply to (1) stack heights in existence, or dispersion techniques implemented on or before December 31, 1970, except where pollutants are being emitted from such stacks or using such dispersion techniques by sources, as defined in section 111(a)(3) of the Clean Air Act, which were constructed, or reconstructed, or for which major modifications, as defined in §§ 51.165(a)(1)(v)(A), 51.166(b)(2)(i) and 52.21(b)(2)(i), were carried out after December 31, 1970; or (2) coal-fired steam electric generating units subject to the provisions of section 118 of the Clean Air Act, which commenced operation before July 1, 1957, and whose stacks were construced under a construction contract awarded before February 8, 1974.

§51.119 Intermittent control systems.

(a) The use of an intermittent control system (ICS) may be taken into account in establishing an emission limitation for a pollutant under a State implementation plan, provided:

(1) The ICS was implemented before December 31, 1970, according to the criteria specified in §51.119(b).

(2) The extent to which the ICS is taken into account is limited to reflect emission levels and associated ambient pollutant concentrations that would result if the ICS was the same as it was before December 31, 1970, and was operated as specified by the operating system of the ICS before December 31, 1970.

(3) The plan allows the ICS to compensate only for emissions from a source for which the ICS was implemented before December 31, 1970, and, in the event the source has been modified, only to the extent the emissions correspond to the maximum capacity of the source before December 31, 1970. For purposes of this paragraph, a source for which the ICS was implemented is any particular structure or equipment the emissions from which were subject to the ICS operating procedures.

(4) The plan requires the continued operation of any constant pollution control system which was in use before December 31, 1970, or the equivalent of that system.

(5) The plan clearly defines the emission limits affected by the ICS and the manner in which the ICS is taken into account in establishing those limits.

(6) The plan contains requirements for the operation and maintenance of the qualifying ICS which, together with the emission limitations and any other necessary requirements, will assure that the national ambient air quality standards and any applicable prevention of significant deterioration increments will be attained and maintained. These requirements shall include, but not necessarily be limited to, the following:

(i) Requirements that a source owner or operator continuously operate and maintain the components of the ICS specified at §51.119(b)(3) (ii)–(iv) in a manner which assures that the ICS is at least as effective as it was before December 31, 1970. The air quality monitors and meteorological instrumentation specified at §51.119(b) may be operated by a local authority or other entity provided the source has ready access to the data from the monitors and instrumentation.

(ii) Requirements which specify the circumstances under which, the extent to which, and the procedures through which, emissions shall be curtailed through the activation of ICS.

(iii) Requirements for recordkeeping which require the owner or operator of the source to keep, for periods of at least 3 years, records of measured ambient air quality data, meteorological information acquired, and production data relating to those processes affected by the ICS.

(iv) Requirements for reporting which require the owner or operator of the source to notify the State and EPA within 30 days of a NAAQS violation pertaining to the pollutant affected by the ICS.

(7) Nothing in this paragraph affects the applicability of any new source review requirements or new source performance standards contained in the Clean Air Act or 40 CFR subchapter C. Nothing in this paragraph precludes a State from taking an ICS into account in establishing emission limitations to any extent less than permitted by this paragraph.

(b) An intermittent control system (ICS) may be considered implemented for a pollutant before December 31, 1970, if the following criteria are met:

(1) The ICS must have been established and operational with respect to that pollutant prior to December 31, 1970, and reductions in emissions of that pollutant must have occurred when warranted by meteorological and ambient monitoring data.

(2) The ICS must have been designed and operated to meet an air quality objective for that pollutant such as an air quality level or standard.

(3) The ICS must, at a minimum, have included the following components prior to December 31, 1970:

(i) *Air quality monitors.* An array of sampling stations whose location and type were consistent with the air quality objective and operation of the system.

(ii) *Meteorological instrumentation.* A meteorological data acquisition network (may be limited to a single station) which provided meteorological prediction capabilities sufficient to determine the need for, and degree of, emission curtailments necessary to achieve the air quality design objective.

(iii) *Operating system.* A system of established procedures for determining the need for curtailments and for accomplishing such curtailments. Documentation of this system, as required by paragraph (n)(4), may consist of a compendium of memoranda or comparable material which define the criteria and procedures for curtailments and which identify the type and number of personnel authorized to initiate curtailments.

(iv) *Meteorologist.* A person, schooled in meteorology, capable of interpreting data obtained from the meteorological network and qualified to forecast meteorological incidents and their effect on ambient air quality. Sources may have obtained meteorological services through a consultant. Services of such a consultant could include sufficient training of source personnel for certain operational procedures, but not for design, of the ICS.

(4) Documentation sufficient to support the claim that the ICS met the criteria listed in this paragraph must be provided. Such documentation may include affidavits or other documentation.

§ 51.120 Requirements for State Implementation Plan revisions relating to new motor vehicles.

(a) The EPA Administrator finds that the State Implementation Plans (SIPs) for the States of Connecticut, Delaware, Maine, Maryland, Massachusetts, New Hampshire, New Jersey, New York, Pennsylvania, Rhode Island, and Vermont, the portion of Virginia included (as of November 15, 1990) within the Consolidated Metropolitan Statistical Area that includes the District of Columbia, are substantially inadequate to comply with the requirements of section 110(a)(2)(D) of the Clean Air Act, 42 U.S.C. 7410(a)(2)(D), and to mitigate adequately the interstate pollutant transport described in section 184 of the Clean Air Act, 42 U.S.C. 7511C, to the extent that they do not provide for emission reductions from new motor vehicles in the amount that would be achieved by the Ozone Transport Commission low emission vehicle (OTC LEV) program described in paragraph (c) of this section. This inadequacy will be deemed cured for each of the aforementioned States (including the District of Columbia) in the event that EPA determines through rulemaking that a national LEV-equivalent new motor vehicle emission control program is an acceptable alternative for OTC LEV and finds that such program is in effect. In the event no such finding is made, each of those States must adopt and submit to EPA by February 15, 1996 a SIP revision meeting the requirements of paragraph (b) of this section in order to cure the SIP inadequacy.

(b) If a SIP revision is required under paragraph (a) of this section, it must contain the OTC LEV program described in paragraph (c) of this section unless the State adopts and submits to EPA, as a SIP revision, other emission-reduction measures sufficient to meet the requirements of paragraph (d) of this section. If a State adopts and submits to EPA, as a SIP revision, other emission-reduction measures pursuant to paragraph (d) of this section, then for purposes of determining whether such a SIP revision is complete within the meaning of section 110(k)(1) (and hence is eligible at least for consideration to be approved as satisfying paragraph (d) of this section), such a SIP revision must contain other adopted emission-reduction measures that, together with the identified potentially broadly practicable measures, achieve at least the minimum level of emission reductions that could potentially satisfy the requirements of paragraph (d) of this section. All such measures must be fully adopted and enforceable.

(c) The OTC LEV program is a program adopted pursuant to section 177 of the Clean Air Act.

(1) The OTC LEV program shall contain the following elements:

(i) It shall apply to all new 1999 and later model year passenger cars and light-duty trucks (0–5750 pounds loaded vehicle weight), as defined in Title 13,

California Code of Regulations, section 1900(b)(11) and (b)(8), respectively, that are sold, imported, delivered, purchased, leased, rented, acquired, received, or registered in any area of the State that is in the Northeast Ozone Transport Region as of December 19, 1994.

(ii) All vehicles to which the OTC LEV program is applicable shall be required to have a certificate from the California Air Resources Board (CARB) affirming compliance with California standards.

(iii) All vehicles to which this LEV program is applicable shall be required to meet the mass emission standards for Non-Methane Organic Gases (NMOG), Carbon Monoxide (CO), Oxides of Nitrogen (NO_X), Formaldehyde (HCHO), and particulate matter (PM) as specified in Title 13, California Code of Regulations, section 1960.1(f)(2) (and formaldehyde standards under section 1960.1(e)(2), as applicable) or as specified by California for certification as a TLEV (Transitional Low-Emission Vehicle), LEV (Low-Emission Vehicle), ULEV (Ultra-Low-Emission Vehicle), or ZEV (Zero-Emission Vehicle) under section 1960.1(g)(1) (and section 1960.1(e)(3), for formaldehyde standards, as applicable).

(iv) All manufacturers of vehicles subject to the OTC LEV program shall be required to meet the fleet average NMOG exhaust emission values for production and delivery for sale of their passenger cars, light-duty trucks 0–3750 pounds loaded vehicle weight, and light-duty trucks 3751–5750 pounds loaded vehicle weight specified in Title 13, California Code of Regulations, section 1960.1(g)(2) for each model year beginning in 1999. A State may determine not to implement the NMOG fleet average in the first model year of the program if the State begins implementation of the program late in a calendar year. However, all States must implement the NMOG fleet average in any full model years of the LEV program.

(v) All manufacturers shall be allowed to average, bank and trade credits in the same manner as allowed under the program specified in Title 13, California Code of Regulations, section 1960.1(g)(2) footnote 7 for each model year beginning in 1999. States may account for credits banked by manufacturers in California or New York in years immediately preceding model year 1999, in a manner consistent with California banking and discounting procedures.

(vi) The provisions for small volume manufacturers and intermediate volume manufacturers, as applied by Title 13, California Code of Regulations to California's LEV program, shall apply. Those manufacturers defined as small volume manufacturers and intermediate volume manufacturers in California under California's regulations shall be considered small volume manufacturers and intermediate volume manufacturers under this program.

(vii) The provisions for hybrid electric vehicles (HEVs), as defined in Title 13 California Code of Regulations, section 1960.1, shall apply for purposes of calculating fleet average NMOG values.

(viii) The provisions for fuel-flexible vehicles and dual-fuel vehicles specified in Title 13, California Code of Regulations, section 1960.1(g)(1) footnote 4 shall apply.

(ix) The provisions for reactivity adjustment factors, as defined by Title 13, California Code of Regulations, shall apply.

(x) The aforementioned State OTC LEV standards shall be identical to the aforementioned California standards as such standards exist on December 19, 1994.

(xi) All States' OTC LEV programs must contain any other provisions of California's LEV program specified in Title 13, California Code of Regulations necessary to comply with section 177 of the Clean Air Act.

(2) States are not required to include the mandate for production of ZEVs specified in Title 13, California Code of Regulations, section 1960.1(g)(2) footnote 9.

(3) Except as specified elsewhere in this section, States may implement the OTC LEV program in any manner consistent with the Act that does not decrease the emissions reductions or jeopardize the effectiveness of the program.

(d) The SIP revision that paragraph (b) of this section describes as an alternative to the OTC LEV program described in paragraph (c) of this section

must contain a set of State-adopted measures that provides at least the following amount of emission reductions in time to bring serious ozone nonattainment areas into attainment by their 1999 attainment date:

(1) Reductions at least equal to the difference between:

(i) The nitrogen oxides (NO_X) emission reductions from the 1990 statewide emissions inventory achievable through implementation of all of the Clean Air Act-mandated and potentially broadly practicable control measures throughout all portions of the State that are within the Northeast Ozone Transport Region created under section 184(a) of the Clean Air Act as of December 19, 1994; and

(ii) A reduction in NO_X emissions from the 1990 statewide inventory in such portions of the State of 50% or whatever greater reduction is necessary to prevent significant contribution to nonattainment in, or interference with maintenance by, any downwind State.

(2) Reductions at least equal to the difference between:

(i) The VOC emission reductions from the 1990 statewide emissions inventory achievable through implementation of all of the Clean Air Act-mandated and potentially broadly practicable control measures in all portions of the State in, or near and upwind of, any of the serious or severe ozone nonattainment areas lying in the series of such areas running northeast from the Washington, DC, ozone nonattainment area to and including the Portsmouth, New Hampshire ozone nonattainment area; and

(ii) A reduction in VOC emissions from the 1990 emissions inventory in all such areas of 50% or whatever greater reduction is necessary to prevent significant contribution to nonattainment in, or interference with maintenance by, any downwind State.

[60 FR 4736, Jan. 24, 1995]

§ 51.121 Findings and requirements for submission of State implementation plan revisions relating to emissions of oxides of nitrogen.

(a)(1) The Administrator finds that the State implementation plan (SIP) for each jurisdiction listed in paragraph (c) of this section is substantially inadequate to comply with the requirements of section 110(a)(2)(D)(i)(I) of the Clean Air Act (CAA), 42 U.S.C. 7410(a)(2)(D)(i)(I), because the SIP does not include adequate provisions to prohibit sources and other activities from emitting nitrogen oxides (''NO_X'') in amounts that will contribute significantly to nonattainment in one or more other States with respect to the 1-hour ozone national ambient air quality standards (NAAQS). Each of the jurisdictions listed in paragraph (c) of this section must submit to EPA a SIP revision that cures the inadequacy.

(2) Under section 110(a)(1) of the CAA, 42 U.S.C. 7410(a)(1), the Administrator determines that each jurisdiction listed in paragraph (c) of this section must submit a SIP revision to comply with the requirements of section 110(a)(2)(D)(i)(I), 42 U.S.C. 7410(a)(2)(D)(i)(I), through the adoption of adequate provisions prohibiting sources and other activities from emitting NO_X in amounts that will contribute significantly to nonattainment in, or interfere with maintenance by, one or more other States with respect to the 8-hour ozone NAAQS.

(3)(i) For purposes of this section, the term ''Phase I SIP Submission'' means those SIP revisions submitted by States on or before October 30, 2000 in compliance with paragraph (b)(1)(ii) of this section. A State's Phase I SIP submission may include portions of the NO_X budget, under paragraph (e)(3) of this section, that a State is required to include in a Phase II SIP submission.

(ii) For purposes of this section, the term ''Phase II SIP Submission'' means those SIP revisions that must be submitted by a State in compliance with paragraph (b)(1)(ii) of this section and which includes portions of the NO_X budget under paragraph (e)(3) of this section.

(b)(1) For each jurisdiction listed in paragraph (c) of this section, the SIP revision required under paragraph (a) of this section will contain adequate provisions, for purposes of complying with section 110(a)(2)(D)(i)(I) of the CAA, 42 U.S.C. 7410(a)(2)(D)(i)(I), only if the SIP revision:

(i) Contains control measures adequate to prohibit emissions of NO_X that would otherwise be projected, in accordance with paragraph (g) of this section, to cause the jurisdiction's overall NO_X emissions to be in excess of the budget for that jurisdiction described in paragraph (e) of this section (except as provided in paragraph (b)(2) of this section),

(ii) Requires full implementation of all such control measures by no later than May 31, 2004 for the sources covered by a Phase I SIP submission and May 1, 2007 for the sources covered by a Phase II SIP submission.

(iii) Meets the other requirements of this section. The SIP revision's compliance with the requirement of paragraph (b)(1)(i) of this section shall be considered compliance with the jurisdiction's budget for purposes of this section.

(2) The requirements of paragraph (b)(1)(i) of this section shall be deemed satisfied, for the portion of the budget covered by an interstate trading program, if the SIP revision:

(i) Contains provisions for an interstate trading program that EPA determines will, in conjunction with interstate trading programs for one or more other jurisdictions, prohibit NO_X emissions in excess of the sum of the portion of the budgets covered by the trading programs for those jurisdictions; and

(ii) Conforms to the following criteria:

(A) Emissions reductions used to demonstrate compliance with the revision must occur during the ozone season.

(B) Emissions reductions occurring prior to the first year in which any sources covered by Phase I or Phase II SIP submission are subject to control measures under paragraph (b)(1)(i) of this section may be used by a source to demonstrate compliance with the SIP revision for the first and second ozone seasons in which any sources covered by a Phase I or Phase II SIP submission are subject to such control measures, provided the SIPs provisions regarding such use comply with the requirements of paragraph (e)(4) of this section.

(C) Emissions reductions credits or emissions allowances held by a source or other person following the first ozone season in which any sources covered by a Phase I or Phase II SIP submission are subject to control measures under paragraph (b)(1)(i) of this section or any ozone season thereafter that are not required to demonstrate compliance with the SIP for the relevant ozone season may be banked and used to demonstrate compliance with the SIP in a subsequent ozone season.

(D) Early reductions created according to the provisions in paragraph (b)(2)(ii)(B) of this section and used in the first ozone season in which any sources covered by Phase I or Phase II submissions are subject to the control measures under paragraph (b)(1)(i) of this section are not subject to the flow control provisions set forth in paragraph (b)(2)(ii)(E) of this section.

(E) Starting with the second ozone season in which any sources covered by a Phase I or Phase II SIP submission are subject to control measures under paragraph (b)(1)(i) of this section, the SIP shall include provisions to limit the use of banked emissions reductions credits or emissions allowances beyond a predetermined amount as calculated by one of the following approaches:

(*1*) Following the determination of compliance after each ozone season, if the total number of emissions reduction credits or banked allowances held by sources or other persons subject to the trading program exceeds 10 percent of the sum of the allowable ozone season NO_X emissions for all sources subject to the trading program, then all banked allowances used for compliance for the following ozone season shall be subject to the following:

(*i*) A ratio will be established according to the following formula: (0.10) × (the sum of the allowable ozone season NO_X emissions for all sources subject to the trading program) ÷ (the total number of banked emissions reduction credits or emissions allowances held by all sources or other persons subject to the trading program).

(*ii*) The ratio, determined using the formula specified in paragraph (b)(2)(ii)(E)(1)(i) of this section, will be multiplied by the number of banked

emissions reduction credits or emissions allowances held in each account at the time of compliance determination. The resulting product is the number of banked emissions reduction credits or emissions allowances in the account which can be used in the current year's ozone season at a rate of 1 credit or allowance for every 1 ton of emissions. The SIP shall specify that banked emissions reduction credits or emissions allowances in excess of the resulting product either may not be used for compliance, or may only be used for compliance at a rate no less than 2 credits or allowances for every 1 ton of emissions.

(*2*) At the time of compliance determination for each ozone season, if the total number of banked emissions reduction credits or emissions allowances held by a source subject to the trading program exceeds 10 percent of the source's allowable ozone season NO_X emissions, all banked emissions reduction credits or emissions allowances used for compliance in such ozone season by the source shall be subject to the following:

(*i*) The source may use an amount of banked emissions reduction credits or emissions allowances not greater than 10 percent of the source's allowable ozone season NO_X emissions for compliance at a rate of 1 credit or allowance for every 1 ton of emissions.

(*ii*) The SIP shall specify that banked emissions reduction credits or emissions allowances in excess of 10 percent of the source's allowable ozone season NO_X emissions may not be used for compliance, or may only be used for compliance at a rate no less than 2 credits or allowances for every 1 ton of emissions.

(c) The following jurisdictions (hereinafter referred to as ''States'') are subject to the requirement of this section:

(1) With respect to the 1-hour ozone NAAQS: Connecticut, Delaware, Illinois, Indiana, Kentucky, Maryland, Massachusetts, New Jersey, New York, North Carolina, Ohio, Pennsylvania, Rhode Island, South Carolina, Tennessee, Virginia, West Virginia, and the District of Columbia.

(2) With respect to the 1-hour ozone NAAQS, the portions of Missouri, Michigan, and Alabama within the fine grid of the OTAG modeling domain. The fine grid is the area encompassed by a box with the following geographic coordinates: Southwest Corner, 92 degrees West longitude and 32 degrees North latitude; and Northeast Corner, 69.5 degrees West longitude and 44 degrees North latitude.

(d)(1) The SIP submissions required under paragraph (a) of this section must be submitted to EPA by no later than October 30, 2000 for Phase I SIP submissions and no later than April 1, 2005 for Phase II SIP submissions.

(2) The State makes an official submission of its SIP revision to EPA only when:

(i) The submission conforms to the requirements of appendix V to this part; and

(ii) The State delivers five copies of the plan to the appropriate Regional Office, with a letter giving notice of such action.

(e)(1) Except as provided in paragraph (e)(2)(ii) of this section, the NO_X budget for a State listed in paragraph (c) of this section is defined as the total amount of NO_X emissions from all sources in that State, as indicated in paragraph (e)(2)(i) of this section with respect to that State, which the State must demonstrate that it will not exceed in the 2007 ozone season pursuant to paragraph (g)(1) of this section.

(2)(i) The State-by-State amounts of the NO_X budget, expressed in tons, are as follows:

State	Final budget
Alabama	119,827
Connecticut	42,850
Delaware	22,862
District of Columbia	6,657
Illinois	271,091
Indiana	230,381
Kentucky	162,519
Maryland	81,947
Massachusetts	84,848
Michigan	190,908
Missouri	61,406
New Jersey	96,876
New York	240,322
North Carolina	165,306
Ohio	249,541
Pennsylvania	257,928
Rhode Island	9,378
South Carolina	123,496
Tennessee	198,286
Virginia	180,521
West Virginia	83,921
Total	$3,031,527

(ii) (A) For purposes of paragraph (e)(2)(i) of this section, in the case of each State listed in paragraphs (e)(2)(ii)(B) through (E) of this section, the NO_X budget is defined as the total amount of NO_X emissions from all sources in the specified counties in that State, as indicated in paragraph (e)(2)(i) of this section with respect to the State, which the State must demonstrate that it will not exceed in the 2007 ozone season pursuant to paragraph (g)(1) of this section.

(B) In the case of Alabama, the counties are: Autauga, Bibb, Blount, Calhoun, Chambers, Cherokee, Chilton, Clay, Cleburne, Colbert, Coosa, Cullman, Dallas, De Kalb, Elmore, Etowah, Fayette, Franklin, Greene, Hale, Jackson, Jefferson, Lamar, Lauderdale, Lawrence, Lee, Limestone, Macon, Madison, Marion, Marshall, Morgan, Perry, Pickens, Randolph, Russell, St. Clair, Shelby, Sumter, Talladega, Tallapoosa, Tuscaloosa, Walker, and Winston.

(C) [Reserved]

(D) In the case of Michigan, the counties are: Allegan, Barry, Bay, Berrien, Branch, Calhoun, Cass, Clinton, Eaton, Genesee, Gratiot, Hillsdale, Ingham, Ionia, Isabella, Jackson, Kalamazoo, Kent, Lapeer, Lenawee, Livingston, Macomb, Mecosta, Midland, Monroe, Montcalm, Muskegon, Newaygo, Oakland, Oceana, Ottawa, Saginaw, St. Clair, St. Joseph, Sanilac, Shiawassee, Tuscola, Van Buren, Washtenaw, and Wayne.

(E) In the case of Missouri, the counties are: Bollinger, Butler, Cape Girardeau, Carter, Clark, Crawford, Dent, Dunklin, Franklin, Gasconade, Iron, Jefferson, Lewis, Lincoln, Madison, Marion, Mississippi, Montgomery, New Madrid, Oregon, Pemiscot, Perry, Pike, Ralls, Reynolds, Ripley, St. Charles, St. Genevieve, St. Francois, St. Louis, St. Louis City, Scott, Shannon, Stoddard, Warren, Washington, and Wayne.

(3) The State-by-State amounts of the portion of the NO_X budget provided in paragraph (e)(1) of this section, expressed in tons, that the States may include in a Phase II SIP submission are as follows:

State	Phase II incremental budget
Alabama	4,968
Connecticut	41
Delaware	660
District of Columbia	1
Illinois	7,055
Indiana	4,244
Kentucky	2,556
Maryland	780
Massachusetts	1,023
Michigan	1,033
New Jersey	−994
New York	1,659
North Carolina	6,026
Ohio	2,741
Pennsylvania	10,230
Rhode Island	192
South Carolina	4,260
Tennessee	2,877
Virginia	6,168
West Virginia	1,124
Total	56,644

(4)(i) Notwithstanding the State's obligation to comply with the budgets set forth in paragraph (e)(2) of this section, a SIP revision may allow sources required by the revision to implement NO_X emission control measures to demonstrate compliance in the first and second ozone seasons in which any sources covered by a Phase I or Phase II SIP submission are subject to control measures under paragraph (b)(1)(i) of this section using credit issued from the State's compliance supplement pool, as set forth in paragraph (e)(4)(iii) of this section.

(ii) A source may not use credit from the compliance supplement pool to demonstrate compliance after the second ozone season in which any sources are covered by a Phase I or Phase II SIP submission.

(iii) The State-by-State amounts of the compliance supplement pool are as follows:

State	Compliance supplement pool (tons of NO_X)
Alabama	8,962
Connecticut	569
Delaware	168
District of Columbia	0
Illinois	17,688
Indiana	19,915
Kentucky	13,520
Maryland	3,882
Massachusetts	404
Michigan	9,907
Missouri	5,630
New Jersey	1,550
New York	2,764
North Carolina	10,737

State	Compliance supplement pool (tons of NO_X)
Ohio	22,301
Pennsylvania	15,763
Rhode Island	15
South Carolina	5,344
Tennessee	10,565
Virginia	5,504
West Virginia	16,709
Total	182,625

(iv) The SIP revision may provide for the distribution of the compliance supplement pool to sources that are required to implement control measures using one or both of the following two mechanisms:

(A) The State may issue some or all of the compliance supplement pool to sources that implement emissions reductions during the ozone season beyond all applicable requirements in the first ozone season in which any sources covered by a Phase I or Phase II SIP submission are subject to control measures under paragraph (b)(1)(i) of this section.

(*1*) The State shall complete the issuance process by no later than the commencement of the first ozone season in which any sources covered by a Phase I or Phase II SIP submission are subject to control measures under paragraph (b)(1)(i) of this section.

(*2*) The emissions reduction may not be required by the State's SIP or be otherwise required by the CAA.

(*3*) The emissions reductions must be verified by the source as actually having occurred during an ozone season between September 30, 1999 and the commencement of the first ozone season in which any sources covered by a Phase I or Phase II SIP submission are subject to control measures under paragraph (b)(1)(i) of this section.

(*4*) The emissions reduction must be quantified according to procedures set forth in the SIP revision and approved by EPA. Emissions reductions implemented by sources serving electric generators with a nameplate capacity greater than 25 MWe, or boilers, combustion turbines or combined cycle units with a maximum design heat input greater than 250 mmBtu/hr, must be quantified according to the requirements in paragraph (i)(4) of this section.

(*5*) If the SIP revision contains approved provisions for an emissions trading program, sources that receive credit according to the requirements of this paragraph may trade the credit to other sources or persons according to the provisions in the trading program.

(B) The State may issue some or all of the compliance supplement pool to sources that demonstrate a need for an extension of the earliest date on which any sources covered by a Phase I or Phase II SIP submission are subject to control measures under paragraph (b)(1)(i) of this section according to the following provisions:

(*1*) The State shall initiate the issuance process by the later date of September 30 before the first ozone season in which any sources covered by a Phase I or Phase II SIP submission are subject to control measures under paragraph (b)(1)(i) of this section or after the State issues credit according to the procedures in paragraph (e)(4)(iv)(A) of this section.

(*2*) The State shall complete the issuance process by no later than the commencement of the first ozone season in which any sources covered by a Phase I or Phase II SIP submission are subject to control measures under paragraph (b)(1)(i) of this section.

(*3*) The State shall issue credit to a source only if the source demonstrates the following:

(*i*) For a source used to generate electricity, compliance with the SIP revision's applicable control measures by the commencement of the first ozone season in which any sources covered by a Phase I or Phase II SIP submission are subject to control measures under paragraph (b)(1)(i) of this section, would create undue risk for the reliability of the electricity supply. This demonstration must include a showing that it would not be feasible to import electricity from other electricity generation systems during the installation of control technologies necessary to comply with the SIP revision.

(*ii*) For a source not used to generate electricity, compliance with the SIP revision's applicable control measures by the commencement of the first

ozone season in which any sources covered by a Phase I or Phase II SIP submission are subject to control measures under paragraph (b)(1)(i) of this section would create undue risk for the source or its associated industry to a degree that is comparable to the risk described in paragraph (e)(4)(iv)(B)(*3*)(*i*) of this section.

(*iii*) For a source subject to an approved SIP revision that allows for early reduction credits in accordance with paragraph (e)(4)(iv)(A) of this section, it was not possible for the source to comply with applicable control measures by generating early reduction credits or acquiring early reduction credits from other sources.

(*iv*) For a source subject to an approved emissions trading program, it was not possible to comply with applicable control measures by acquiring sufficient credit from other sources or persons subject to the emissions trading program.

(*4*) The State shall ensure the public an opportunity, through a public hearing process, to comment on the appropriateness of allocating compliance supplement pool credits to a source under paragraph (e)(3)(iv)(B) of this section.

(5) If, no later than February 22, 1999, any member of the public requests revisions to the source-specific data and vehicle miles traveled (VMT) and nonroad mobile growth rates, VMT distribution by vehicle class, average speed by roadway type, inspection and maintenance program parameters, and other input parameters used to establish the State budgets set forth in paragraph (e)(2) of this section or the 2007 baseline sub-inventory information set forth in paragraph (g)(2)(ii) of this section, then EPA will act on that request no later than April 23, 1999 provided:

(i) The request is submitted in electronic format;

(ii) Information is provided to corroborate and justify the need for the requested modification;

(iii) The request includes the following data information regarding any electricity-generating source at issue:

(A) Federal Information Placement System (FIPS) State Code;

(B) FIPS County Code;

(C) Plant name;

(D) Plant ID numbers (ORIS code preferred, State agency tracking number also or otherwise);

(E) Unit ID numbers (a unit is a boiler or other combustion device);

(F) Unit type;

(G) Primary fuel on a heat input basis;

(H) Maximum rated heat input capacity of unit;

(I) Nameplate capacity of the largest generator the unit serves;

(J) Ozone season heat inputs for the years 1995 and 1996;

(K) 1996 (or most recent) average NO_X rate for the ozone season;

(L) Latitude and longitude coordinates;

(M) Stack parameter information ;

(N) Operating parameter information;

(O) Identification of specific change to the inventory; and

(P) Reason for the change;

(iv) The request includes the following data information regarding any non-electricity generating point source at issue:

(A) FIPS State Code;

(B) FIPS County Code;

(C) Plant name;

(D) Facility primary standard industrial classification code (SIC);

(E) Plant ID numbers (NEDS, AIRS/AFS, and State agency tracking number also or otherwise);

(F) Unit ID numbers (a unit is a boiler or other combustion device);

(G) Primary source classification code (SCC);

(H) Maximum rated heat input capacity of unit;

(I) 1995 ozone season or typical ozone season daily NO_X emissions;

(J) 1995 existing NO_X control efficiency;

(K) Latitude and longitude coordinates;

(L) Stack parameter information;

(M) Operating parameter information;

(N) Identification of specific change to the inventory; and

(O) Reason for the change;

(v) The request includes the following data information regarding any stationary area source or nonroad mobile source at issue:

(A) FIPS State Code;

(B) FIPS County Code;

(C) Primary source classification code (SCC);

(D) 1995 ozone season or typical ozone season daily NO_X emissions;

(E) 1995 existing NO_X control efficiency;

(F) Identification of specific change to the inventory; and

(G) Reason for the change;

(vi) The request includes the following data information regarding any highway mobile source at issue:

(A) FIPS State Code;

(B) FIPS County Code;

(C) Primary source classification code (SCC) or vehicle type;

(D) 1995 ozone season or typical ozone season daily vehicle miles traveled (VMT);

(E) 1995 existing NO_X control programs;

(F) identification of specific change to the inventory; and

(G) reason for the change.

(f) Each SIP revision must set forth control measures to meet the NO_X budget in accordance with paragraph (b)(1)(i) of this section, which include the following:

(1) A description of enforcement methods including, but not limited to:

(i) Procedures for monitoring compliance with each of the selected control measures;

(ii) Procedures for handling violations; and

(iii) A designation of agency responsibility for enforcement of implementation.

(2) Should a State elect to impose control measures on fossil fuel-fired NO_X sources serving electric generators with a nameplate capacity greater than 25 MWe or boilers, combustion turbines or combined cycle units with a maximum design heat input greater than 250 mmBtu/hr as a means of meeting its NO_X budget, then those measures must:

(i)(A) Impose a NO_X mass emissions cap on each source;

(B) Impose a NO_X emissions rate limit on each source and assume maximum operating capacity for every such source for purposes of estimating mass NO_X emissions; or

(C) Impose any other regulatory requirement which the State has demonstrated to EPA provides equivalent or greater assurance than options in paragraphs (f)(2)(i)(A) or (f)(2)(i)(B) of this section that the State will comply with its NO_X budget in the 2007 ozone season; and

(ii) Impose enforceable mechanisms, in accordance with paragraphs (b)(1) (i) and (ii) of this section, to assure that collectively all such sources, including new or modified units, will not exceed in the 2007 ozone season the total NO_X emissions projected for such sources by the State pursuant to paragraph (g) of this section.

(3) For purposes of paragraph (f)(2) of this section, the term ''fossil fuel-fired'' means, with regard to a NO_X source:

(i) The combustion of fossil fuel, alone or in combination with any other fuel, where fossil fuel actually combusted comprises more than 50 percent of the annual heat input on a Btu basis during any year starting in 1995 or, if a NO_X source had no heat input starting in 1995, during the last year of operation of the NO_X source prior to 1995; or

(ii) The combustion of fossil fuel, alone or in combination with any other fuel, where fossil fuel is projected to comprise more than 50 percent of the annual heat input on a Btu basis during any year; provided that the NO_X source shall be ''fossil fuel-fired'' as of the date, during such year, on which the NO_X source begins combusting fossil fuel.

(g)(1) Each SIP revision must demonstrate that the control measures contained in it are adequate to provide for the timely compliance with the State's NO_X budget during the 2007 ozone season.

(2) The demonstration must include the following:

(i) Each revision must contain a detailed baseline inventory of NO_X mass emissions from the following sources in the year 2007, absent the control measures specified in the SIP submission: electric generating units (EGU), non-electric generating units (non-EGU), area, nonroad and highway sources. The State must use the same baseline emissions inventory that EPA used in calculating the State's NO_X budget, as

set forth for the State in paragraph (g)(2)(ii) of this section, except that EPA may direct the State to use different baseline inventory information if the State fails to certify that it has implemented all of the control measures assumed in developing the baseline inventory.

(ii) The revised NO_X emissions sub-inventories for each State, expressed in tons per ozone season, are as follows:

State	EGU	Non-EGU	Area	Nonroad	Highway	Total
Alabama	29,022	43,415	28,762	20,146	51,274	172,619
Connecticut	2,652	5,216	4,821	10,736	19,424	42,849
Delaware	5,250	2,473	1,129	5,651	8,358	22,861
District of Columbia	207	282	830	3,135	2,204	6,658
Illinois	32,372	59,577	9,369	56,724	112,518	270,560
Indiana	47,731	47,363	29,070	26,494	79,307	229,965
Kentucky	36,503	25,669	31,807	15,025	53,268	162,272
Maryland	14,656	12,585	4,448	20,026	30,183	81,898
Massachusetts	15,146	10,298	11,048	20,166	28,190	84,848
Michigan	32,228	60,055	31,721	26,935	78,763	229,702
Missouri	24,216	21,602	7,341	20,829	51,615	125,603
New Jersey	10,250	15,464	12,431	23,565	35,166	96,876
New York	31,036	25,477	17,423	42,091	124,261	240,288
North Carolina	31,821	26,434	11,067	22,005	73,695	165,022
Ohio	48,990	40,194	21,860	43,380	94,850	249,274
Pennsylvania	47,469	70,132	17,842	30,571	91,578	257,592
Rhode Island	997	1,635	448	2,455	3,843	9,378
South Carolina	16,772	27,787	9,415	14,637	54,494	123,105
Tennessee	25,814	39,636	13,333	52,920	66,342	198,045
Virginia	17,187	35,216	27,738	27,859	72,195	180,195
West Virginia	26,859	20,238	5,459	10,433	20,844	83,833
Wisconsin	17,381	19,853	11,253	17,965	69,319	135,771
Total	544,961	640,317	321,827	540,215	1,310,466	3,357,786

Note to paragraph (g)(2)(ii): Totals may not sum due to rounding.

(iii) Each revision must contain a summary of NO_X mass emissions in 2007 projected to result from implementation of each of the control measures specified in the SIP submission and from all NO_X sources together following implementation of all such control measures, compared to the baseline 2007 NO_X emissions inventory for the State described in paragraph (g)(2)(i) of this section. The State must provide EPA with a summary of the computations, assumptions, and judgments used to determine the degree of reduction in projected 2007 NO_X emissions that will be achieved from the implementation of the new control measures compared to the baseline emissions inventory.

(iv) Each revision must identify the sources of the data used in the projection of emissions.

(h) Each revision must comply with §51.116 of this part (regarding data availability).

(i) Each revision must provide for monitoring the status of compliance with any control measures adopted to meet the NO_X budget. Specifically, the revision must meet the following requirements:

(1) The revision must provide for legally enforceable procedures for requiring owners or operators of stationary sources to maintain records of and periodically report to the State:

(i) Information on the amount of NO_X emissions from the stationary sources; and

(ii) Other information as may be necessary to enable the State to determine whether the sources are in compliance with applicable portions of the control measures;

(2) The revision must comply with §51.212 of this part (regarding testing, inspection, enforcement, and complaints);

(3) If the revision contains any transportation control measures, then the revision must comply with §51.213 of this part (regarding transportation control measures);

(4) If the revision contains measures to control fossil fuel-fired NO_X sources serving electric generators with a

nameplate capacity greater than 25 MWe or boilers, combustion turbines or combined cycle units with a maximum design heat input greater than 250 mmBtu/hr, then the revision must require such sources to comply with the monitoring provisions of part 75, subpart H.

(5) For purposes of paragraph (i)(4) of this section, the term ''fossil fuel-fired'' means, with regard to a NO_X source:

(i) The combustion of fossil fuel, alone or in combination with any other fuel, where fossil fuel actually combusted comprises more than 50 percent of the annual heat input on a Btu basis during any year starting in 1995 or, if a NO_X source had no heat input starting in 1995, during the last year of operation of the NO_X source prior to 1995; or

(ii) The combustion of fossil fuel, alone or in combination with any other fuel, where fossil fuel is projected to comprise more than 50 percent of the annual heat input on a Btu basis during any year, provided that the NO_X source shall be ''fossil fuel-fired'' as of the date, during such year, on which the NO_X source begins combusting fossil fuel.

(j) Each revision must show that the State has legal authority to carry out the revision, including authority to:

(1) Adopt emissions standards and limitations and any other measures necessary for attainment and maintenance of the State's NO_X budget specified in paragraph (e) of this section;

(2) Enforce applicable laws, regulations, and standards, and seek injunctive relief;

(3) Obtain information necessary to determine whether air pollution sources are in compliance with applicable laws, regulations, and standards, including authority to require recordkeeping and to make inspections and conduct tests of air pollution sources;

(4) Require owners or operators of stationary sources to install, maintain, and use emissions monitoring devices and to make periodic reports to the State on the nature and amounts of emissions from such stationary sources; also authority for the State to make such data available to the public as reported and as correlated with any applicable emissions standards or limitations.

(k)(1) The provisions of law or regulation which the State determines provide the authorities required under this section must be specifically identified, and copies of such laws or regulations must be submitted with the SIP revision.

(2) Legal authority adequate to fulfill the requirements of paragraphs (j)(3) and (4) of this section may be delegated to the State under section 114 of the CAA.

(l)(1) A revision may assign legal authority to local agencies in accordance with § 51.232 of this part.

(2) Each revision must comply with § 51.240 of this part (regarding general plan requirements).

(m) Each revision must comply with § 51.280 of this part (regarding resources).

(n) For purposes of the SIP revisions required by this section, EPA may make a finding as applicable under section 179(a)(1)–(4) of the CAA, 42 U.S.C. 7509(a)(1)–(4), starting the sanctions process set forth in section 179(a) of the CAA. Any such finding will be deemed a finding under § 52.31(c) of this part and sanctions will be imposed in accordance with the order of sanctions and the terms for such sanctions established in § 52.31 of this part.

(o) Each revision must provide for State compliance with the reporting requirements set forth in § 51.122 of this part.

(p)(1) Notwithstanding any other provision of this section, if a State adopts regulations substantively identical to 40 CFR part 96 (the model NO_X budget trading program for SIPs), incorporates such part by reference into its regulations, or adopts regulations that differ substantively from such part only as set forth in paragraph (p)(2) of this section, then that portion of the State's SIP revision is automatically approved as satisfying the same portion of the State's NO_X emission reduction obligations as the State projects such regulations will satisfy, provided that:

(i) The State has the legal authority to take such action and to implement its responsibilities under such regulations, and

(ii) The SIP revision accurately reflects the NO_X emissions reductions to be expected from the State's implementation of such regulations.

(2) If a State adopts an emissions trading program that differs substantively from 40 CFR part 96 in only the following respects, then such portion of the State's SIP revision is approved as set forth in paragraph (p)(1) of this section:

(i) The State may expand the applicability provisions of the trading program to include units (as defined in 40 CFR 96.2) that are smaller than the size criteria thresholds set forth in 40 CFR 96.4(a);

(ii) The State may decline to adopt the exemption provisions set forth in 40 CFR 96.4(b);

(iii) The State may decline to adopt the opt-in provisions set forth in subpart I of 40 CFR part 96;

(iv) The State may decline to adopt the allocation provisions set forth in subpart E of 40 CFR part 96 and may instead adopt any methodology for allocating NO_X allowances to individual sources, provided that:

(A) The State's methodology does not allow the State to allocate NO_X allowances in excess of the total amount of NO_X emissions which the State has assigned to its trading program; and

(B) The State's methodology conforms with the timing requirements for submission of allocations to the Administrator set forth in 40 CFR 96.41; and

(v) The State may decline to adopt the early reduction credit provisions set forth in 40 CFR 96.55(c) and may instead adopt any methodology for issuing credit from the State's compliance supplement pool that complies with paragraph (e)(3) of this section.

(3) If a State adopts an emissions trading program that differs substantively from 40 CFR part 96 other than as set forth in paragraph (p)(2) of this section, then such portion of the State's SIP revision is not automatically approved as set forth in paragraph (p)(1) of this section but will be reviewed by the Administrator for approvability in accordance with the other provisions of this section.

(q) *Stay of Findings of Significant Contribution with respect to the 8-hour standard.* Notwithstanding any other provisions of this subpart, the effectiveness of paragraph (a)(2) of this section is stayed.

(r)(1) Notwithstanding any provisions of paragraph (p) of this section, subparts A through I of part 96 of this chapter, and any State's SIP to the contrary, the Administrator will not carry out any of the functions set forth for the Administrator in subparts A through I of part 96 of this chapter, or in any emissions trading program in a State's SIP approved under paragraph (p) of this section, with regard to any ozone season that occurs after September 30, 2008.

(2) Except as provided in §51.123(bb) with regard to an ozone season that occurs before January 1, 2012, a State whose SIP is approved as meeting the requirements of this section and that includes an emissions trading program approved under paragraph (p) of this section must revise the SIP to adopt control measures that satisfy the same portion of the State's NO_X emission reduction requirements under this section as the State projected such emissions trading program would satisfy.

[63 FR 57491, Oct. 27, 1998, as amended at 63 FR 71225, Dec. 24, 1998; 64 FR 26305, May 14, 1999; 65 FR 11230, Mar. 2, 2000; 65 FR 56251, Sept. 18, 2000; 69 FR 21642, Apr. 21, 2004; 70 FR 25317, May 12, 2005; 70 FR 51597, Aug. 31, 2005; 73 FR 21538, Apr. 22, 2008; 76 FR 48353, Aug. 8, 2011]

§51.122 Emissions reporting requirements for SIP revisions relating to budgets for NO_X emissions.

(a) As used in this section, words and terms shall have the meanings set forth in §51.50.

(b) For its transport SIP revision under §51.121, each state must submit to EPA NO_X emissions data as described in this section.

(c) Each revision must provide for periodic reporting by the state of NO_X emissions data to demonstrate whether the state's emissions are consistent with the projections contained in its approved SIP submission.

(1) For the every-year reporting cycle, each revision must provide for reporting of NO_X emissions data every year as follows:

(i) The state must report to EPA emissions data from all NO_X sources

within the state for which the state specified control measures in its SIP submission under § 51.121(g), including all sources for which the state has adopted measures that differ from the measures incorporated into the baseline inventory for the year 2007 that the state developed in accordance with § 51.121(g).

(ii) If sources report NO_X emissions data to EPA for a given year pursuant to a trading program approved under § 51.121(p) or pursuant to the monitoring and reporting requirements of 40 CFR part 75, then the state need not provide an every-year cycle report to EPA for such sources.

(2) For the three-year cycle reporting, each plan must provide for triennial (*i.e.*, every third year) reporting of NO_X emissions data from all sources within the state.

(3) The data availability requirements in § 51.116 must be followed for all data submitted to meet the requirements of paragraphs (b)(1) and (2) of this section.

(d) The data reported in paragraph (b) of this section must meet the requirements of subpart A of this part.

(e) Approval of ozone season calculation by EPA. Each state must submit for EPA approval an example of the calculation procedure used to calculate ozone season emissions along with sufficient information to verify the calculated value of ozone season emissions.

(f) Reporting schedules.

(1) Data collection is to begin during the ozone season 1 year prior to the state's NO_X SIP Call compliance date.

(2) Reports are to be submitted according to paragraph (b) of this section.

(3) Through 2011, reports are to be submitted according to the schedule in Table 1 of this paragraph. After 2011, triennial reports are to be submitted every third year and annual reports are to be submitted each year that a triennial report is not required.

TABLE 1—SCHEDULE FOR SUBMITTING REPORTS

Data collection year	Type of report required
2005	Triennial.
2006	Annual.
2007	Annual.
2008	Triennial.
2009	Annual.
2010	Annual.
2011	Triennial.

(4) States must submit data for a required year within the time specified after the end of the inventory year for which the data are collected. The first inventory (the 2009 inventory year) and all subsequent years will be due 12 months following the end of the inventory year, *i.e.*, the 2009 inventory must be reported to EPA by December 31, 2010.

(g) Data reporting procedures are given in subpart A. When submitting a formal NO_X Budget Emissions Report and associated data, states shall notify the appropriate EPA Regional Office.

[73 FR 76558, Dec. 17, 2008]

§ 51.123 Findings and requirements for submission of State implementation plan revisions relating to emissions of oxides of nitrogen pursuant to the Clean Air Interstate Rule.

(a)(1) Under section 110(a)(1) of the CAA, 42 U.S.C. 7410(a)(1), the Administrator determines that each State identified in paragraph (c)(1) and (2) of this section must submit a SIP revision to comply with the requirements of section 110(a)(2)(D)(i)(I) of the CAA, 42 U.S.C. 7410(a)(2)(D)(i)(I), through the adoption of adequate provisions prohibiting sources and other activities from emitting NO_X in amounts that will contribute significantly to nonattainment in, or interfere with maintenance by, one or more other States with respect to the fine particles ($PM_{2.5}$) NAAQS.

(2)(a) Under section 110(a)(1) of the CAA, 42 U.S.C. 7410(a)(1), the Administrator determines that each State identified in paragraph (c)(1) and (3) of this section must submit a SIP revision to comply with the requirements of section 110(a)(2)(D)(i)(I) of the CAA, 42 U.S.C. 7410(a)(2)(D)(i)(I), through the adoption of adequate provisions prohibiting sources and other activities from emitting NO_X in amounts that will contribute significantly to nonattainment in, or interfere with maintenance by,

one or more other States with respect to the 8-hour ozone NAAQS.

(3) Notwithstanding the other provisions of this section, such provisions are not applicable as they relate to the State of Minnesota as of December 3, 2009.

(b) For each State identified in paragraph (c) of this section, the SIP revision required under paragraph (a) of this section will contain adequate provisions, for purposes of complying with section 110(a)(2)(D)(i)(I) of the CAA, 42 U.S.C. 7410(a)(2)(D)(i)(I), only if the SIP revision contains control measures that assure compliance with the applicable requirements of this section.

(c) In addition to being subject to the requirements in paragraphs (b) and (d) of this section:

(1) Alabama, Delaware, Florida, Illinois, Indiana, Iowa, Kentucky, Louisiana, Maryland, Michigan, Mississippi, Missouri, New Jersey, New York, North Carolina, Ohio, Pennsylvania, South Carolina, Tennessee, Virginia, West Virginia, Wisconsin, and the District of Columbia shall be subject to the requirements contained in paragraphs (e) through (cc) of this section;

(2) Georgia, Minnesota, and Texas shall be subject to the requirements in paragraphs (e) through (o) and (cc) of this section; and

(3) Arkansas, Connecticut, and Massachusetts shall be subject to the requirements contained in paragraphs (q) through (cc) of this section.

(d)(1) The State's SIP revision under paragraph (a) of this section must be submitted to EPA by no later than September 11, 2006.

(2) The requirements of appendix V to this part shall apply to the SIP revision under paragraph (a) of this section.

(3) The State shall deliver 5 copies of the SIP revision under paragraph (a) of this section to the appropriate Regional Office, with a letter giving notice of such action.

(e) The State's SIP revision shall contain control measures and demonstrate that they will result in compliance with the State's Annual EGU NO_X Budget, if applicable, and achieve the State's Annual Non-EGU NO_X Reduction Requirement, if applicable, for the appropriate periods. The amounts of the State's Annual EGU NO_X Budget and Annual Non-EGU NO_X Reduction Requirement shall be determined as follows:

(1)(i) The Annual EGU NO_X Budget for the State is defined as the total amount of NO_X emissions from all EGUs in that State for a year, if the State meets the requirements of paragraph (a)(1) of this section by imposing control measures, at least in part, on EGUs. If the State imposes control measures under this section on only EGUs, the Annual EGU NO_X Budget for the State shall not exceed the amount, during the indicated periods, specified in paragraph (e)(2) of this section.

(ii) The Annual Non-EGU NO_X Reduction Requirement, if applicable, is defined as the total amount of NO_X emission reductions that the State demonstrates, in accordance with paragraph (g) of this section, it will achieve from non-EGUs during the appropriate period. If the State meets the requirements of paragraph (a)(1) of this section by imposing control measures on only non-EGUs, then the State's Annual Non-EGU NO_X Reduction Requirement shall equal or exceed, during the appropriate periods, the amount determined in accordance with paragraph (e)(3) of this section.

(iii) If a State meets the requirements of paragraph (a)(1) of this section by imposing control measures on both EGUs and non-EGUs, then:

(A) The Annual Non-EGU NO_X Reduction Requirement shall equal or exceed the difference between the amount specified in paragraph (e)(2) of this section for the appropriate period and the amount of the State's Annual EGU NO_X Budget specified in the SIP revision for the appropriate period; and

(B) The Annual EGU NO_X Budget shall not exceed, during the indicated periods, the amount specified in paragraph (e)(2) of this section plus the amount of the Annual Non-EGU NO_X Reduction Requirement under paragraph (e)(1)(iii)(A) of this section for the appropriate period.

(2) For a State that complies with the requirements of paragraph (a)(1) of this section by imposing control measures on only EGUs, the amount of the Annual EGU NO_X Budget, in tons of

NO_X per year, shall be as follows, for the indicated State for the indicated period:

State	Annual EGU NO_X budget for 2009–2014 (tons)	Annual EGU NO_X budget for 2015 and thereafter (tons)
Alabama	69,020	57,517
Delaware	4,166	3,472
District of Columbia	144	120
Florida	99,445	82,871
Georgia	66,321	55,268
Illinois	76,230	63,525
Indiana	108,935	90,779
Iowa	32,692	27,243
Kentucky	83,205	69,337
Louisiana	35,512	29,593
Maryland	27,724	23,104
Michigan	65,304	54,420
Minnesota	31,443	26,203
Mississippi	17,807	14,839
Missouri	59,871	49,892
New Jersey	12,670	10,558
New York	45,617	38,014
North Carolina	62,183	51,819
Ohio	108,667	90,556
Pennsylvania	99,049	82,541
South Carolina	32,662	27,219
Tennessee	50,973	42,478
Texas	181,014	150,845
Virginia	36,074	30,062
West Virginia	74,220	61,850
Wisconsin	40,759	33,966

(3) For a State that complies with the requirements of paragraph (a)(1) of this section by imposing control measures on only non-EGUs, the amount of the Annual Non-EGU NO_X Reduction Requirement, in tons of NO_X per year, shall be determined, for the State for 2009 and thereafter, by subtracting the amount of the State's Annual EGU NO_X Budget for the appropriate year, specified in paragraph (e)(2) of this section from the amount of the State's NO_X baseline EGU emissions inventory projected for the appropriate year, specified in Table 5 of ''Regional and State SO_2 and NO_X Budgets'', March 2005 (available at *http://www.epa.gov/cleanairinterstaterule*).

(4)(i) Notwithstanding the State's obligation to comply with paragraph (e)(2) or (3) of this section, the State's SIP revision may allow sources required by the revision to implement control measures to demonstrate compliance using credit issued from the State's compliance supplement pool, as set forth in paragraph (e)(4)(ii) of this section.

(ii) The State-by-State amounts of the compliance supplement pool are as follows:

State	Compliance supplement pool
Alabama	10,166
Delaware	843
District of Columbia	0
Florida	8,335
Georgia	12,397
Illinois	11,299
Indiana	20,155
Iowa	6,978
Kentucky	14,935
Louisiana	2,251
Maryland	4,670
Michigan	8,347
Minnesota	6,528
Mississippi	3,066
Missouri	9,044
New Jersey	660
New York	0
North Carolina	0
Ohio	25,037
Pennsylvania	16,009
South Carolina	2,600
Tennessee	8,944
Texas	772
Virginia	5,134
West Virginia	16,929
Wisconsin	4,898

(iii) The SIP revision may provide for the distribution of credits from the compliance supplement pool to sources that are required to implement control measures using one or both of the following two mechanisms:

(A) The State may issue credit from compliance supplement pool to sources that are required by the SIP revision to implement NO_X emission control measures and that implement NO_X emission reductions in 2007 and 2008 that are not necessary to comply with any State or federal emissions limitation applicable at any time during such years. Such a source may be issued one credit from the compliance supplement pool for each ton of such emission reductions in 2007 and 2008.

(*1*) The State shall complete the issuance process by January 1, 2010.

(*2*) The emissions reductions for which credits are issued must have been demonstrated by the owners and operators of the source to have occurred during 2007 and 2008 and not to be necessary to comply with any applicable State or federal emissions limitation.

(*3*) The emissions reductions for which credits are issued must have

been quantified by the owners and operators of the source:

(*i*) For EGUs and for fossil-fuel-fired non-EGUs that are boilers or combustion turbines with a maximum design heat input greater than 250 mmBut/hr, using emissions data determined in accordance with subpart H of part 75 of this chapter; and

(*ii*) For non-EGUs not described in paragraph (e)(4)(iii)(A)(3)(i) of this section, using emissions data determined in accordance with subpart H of part 75 of this chapter or, if the State demonstrates that compliance with subpart H of part 75 of this chapter is not practicable, determined, to the extent practicable, with the same degree of assurance with which emissions data are determined for sources subject to subpart H of part 75.

(*4*) If the SIP revision contains approved provisions for an emissions trading program, the owners and operators of sources that receive credit according to the requirements of this paragraph may transfer the credit to other sources or persons according to the provisions in the emissions trading program.

(B) The State may issue credit from the compliance supplement pool to sources that are required by the SIP revision to implement NO_X emission control measures and whose owners and operators demonstrate a need for an extension, beyond 2009, of the deadline for the source for implementing such emission controls.

(*1*) The State shall complete the issuance process by January 1, 2010.

(*2*) The State shall issue credit to a source only if the owners and operators of the source demonstrate that:

(*i*) For a source used to generate electricity, implementation of the SIP revision's applicable control measures by 2009 would create undue risk for the reliability of the electricity supply. This demonstration must include a showing that it would not be feasible for the owners and operators of the source to obtain a sufficient amount of electricity, to prevent such undue risk, from other electricity generation facilities during the installation of control technology at the source necessary to comply with the SIP revision.

(*ii*) For a source not used to generate electricity, compliance with the SIP revision's applicable control measures by 2009 would create undue risk for the source or its associated industry to a degree that is comparable to the risk described in paragraph (e)(4)(iii)(B)(2)(i) of this section.

(*iii*) This demonstration must include a showing that it would not be possible for the source to comply with applicable control measures by obtaining sufficient credits under paragraph (e)(4)(iii)(A) of this section, or by acquiring sufficient credits from other sources or persons, to prevent undue risk.

(f) Each SIP revision must set forth control measures to meet the amounts specified in paragraph (e) of this section, as applicable, including the following:

(1) A description of enforcement methods including, but not limited to:

(i) Procedures for monitoring compliance with each of the selected control measures;

(ii) Procedures for handling violations; and

(iii) A designation of agency responsibility for enforcement of implementation.

(2)(i) If a State elects to impose control measures on EGUs, then those measures must impose an annual NO_X mass emissions cap on all such sources in the State.

(ii) If a State elects to impose control measures on fossil fuel-fired non-EGUs that are boilers or combustion turbines with a maximum design heat input greater than 250 mmBtu/hr, then those measures must impose an annual NO_X mass emissions cap on all such sources in the State.

(iii) If a State elects to impose control measures on non-EGUs other than those described in paragraph (f)(2)(ii) of this section, then those measures must impose an annual NO_X mass emissions cap on all such sources in the State or the State must demonstrate why such emissions cap is not practicable and adopt alternative requirements that ensure that the State will comply with its requirements under paragraph (e) of this section, as applicable, in 2009 and subsequent years.

(g)(1) Each SIP revision that contains control measures covering non-EGUs as part or all of a State's obligation in meeting its requirement under paragraph (a)(1) of this section must demonstrate that such control measures are adequate to provide for the timely compliance with the State's Annual Non-EGU NO_X Reduction Requirement under paragraph (e) of this section and are not adopted or implemented by the State, as of May 12, 2005, and are not adopted or implemented by the Federal government, as of the date of submission of the SIP revision by the State to EPA.

(2) The demonstration under paragraph (g)(1) of this section must include the following, with respect to each source category of non-EGUs for which the SIP revision requires control measures:

(i) A detailed historical baseline inventory of NO_X mass emissions from the source category in a representative year consisting, at the State's election, of 2002, 2003, 2004, or 2005, or an average of 2 or more of those years, absent the control measures specified in the SIP revision.

(A) This inventory must represent estimates of actual emissions based on monitoring data in accordance with subpart H of part 75 of this chapter, if the source category is subject to monitoring requirements in accordance with subpart H of part 75 of this chapter.

(B) In the absence of monitoring data in accordance with subpart H of part 75 of this chapter, actual emissions must be quantified, to the maximum extent practicable, with the same degree of assurance with which emissions are quantified for sources subject to subpart H of part 75 of this chapter and using source-specific or source-category-specific assumptions that ensure a source's or source category's actual emissions are not overestimated. If a State uses factors to estimate emissions, production or utilization, or effectiveness of controls or rules for a source category, such factors must be chosen to ensure that emissions are not overestimated.

(C) For measures to reduce emissions from motor vehicles, emission estimates must be based on an emissions model that has been approved by EPA for use in SIP development and must be consistent with the planning assumptions regarding vehicle miles traveled and other factors current at the time of the SIP development.

(D) For measures to reduce emissions from nonroad engines or vehicles, emission estimates methodologies must be approved by EPA.

(ii) A detailed baseline inventory of NO_X mass emissions from the source category in the years 2009 and 2015, absent the control measures specified in the SIP revision and reflecting changes in these emissions from the historical baseline year to the years 2009 and 2015, based on projected changes in the production input or output, population, vehicle miles traveled, economic activity, or other factors as applicable to this source category.

(A) These inventories must account for implementation of any control measures that are otherwise required by final rules already promulgated, as of May 12, 2005, or adopted or implemented by any federal agency, as of the date of submission of the SIP revision by the State to EPA, and must exclude any control measures specified in the SIP revision to meet the NO_X emissions reduction requirements of this section.

(B) Economic and population forecasts must be as specific as possible to the applicable industry, State, and county of the source or source category and must be consistent with both national projections and relevant official planning assumptions, including estimates of population and vehicle miles traveled developed through consultation between State and local transportation and air quality agencies. However, if these official planning assumptions are inconsistent with official U.S. Census projections of population or with energy consumption projections contained in the U.S. Department of Energy's most recent Annual Energy Outlook, then the SIP revision must make adjustments to correct the inconsistency or must demonstrate how the official planning assumptions are more accurate.

(C) These inventories must account for any changes in production method, materials, fuels, or efficiency that are

expected to occur between the historical baseline year and 2009 or 2015, as appropriate.

(iii) A projection of NO_X mass emissions in 2009 and 2015 from the source category assuming the same projected changes as under paragraph (g)(2)(ii) of this section and resulting from implementation of each of the control measures specified in the SIP revision.

(A) These inventories must address the possibility that the State's new control measures may cause production or utilization, and emissions, to shift to unregulated or less stringently regulated sources in the source category in the same or another State, and these inventories must include any such amounts of emissions that may shift to such other sources.

(B) The State must provide EPA with a summary of the computations, assumptions, and judgments used to determine the degree of reduction in projected 2009 and 2015 NO_X emissions that will be achieved from the implementation of the new control measures compared to the relevant baseline emissions inventory.

(iv) The result of subtracting the amounts in paragraph (g)(2)(iii) of this section for 2009 and 2015, respectively, from the lower of the amounts in paragraph (g)(2)(i) or (g)(2)(ii) of this section for 2009 and 2015, respectively, may be credited towards the State's Annual Non-EGU NO_X Reduction Requirement in paragraph (e)(3) of this section for the appropriate period.

(v) Each SIP revision must identify the sources of the data used in each estimate and each projection of emissions.

(h) Each SIP revision must comply with §51.116 (regarding data availability).

(i) Each SIP revision must provide for monitoring the status of compliance with any control measures adopted to meet the State's requirements under paragraph (e) of this section as follows:

(1) The SIP revision must provide for legally enforceable procedures for requiring owners or operators of stationary sources to maintain records of, and periodically report to the State:

(i) Information on the amount of NO_X emissions from the stationary sources; and

(ii) Other information as may be necessary to enable the State to determine whether the sources are in compliance with applicable portions of the control measures;

(2) The SIP revision must comply with §51.212 (regarding testing, inspection, enforcement, and complaints);

(3) If the SIP revision contains any transportation control measures, then the SIP revision must comply with §51.213 (regarding transportation control measures);

(4)(i) If the SIP revision contains measures to control EGUs, then the SIP revision must require such sources to comply with the monitoring, recordkeeping, and reporting provisions of subpart H of part 75 of this chapter.

(ii) If the SIP revision contains measures to control fossil fuel-fired non-EGUs that are boilers or combustion turbines with a maximum design heat input greater than 250 mmBtu/hr, then the SIP revision must require such sources to comply with the monitoring, recordkeeping, and reporting provisions of subpart H of part 75 of this chapter.

(iii) If the SIP revision contains measures to control any other non-EGUs that are not described in paragraph (i)(4)(ii) of this section, then the SIP revision must require such sources to comply with the monitoring, recordkeeping, and reporting provisions of subpart H of part 75 of this chapter, or the State must demonstrate why such requirements are not practicable and adopt alternative requirements that ensure that the required emissions reductions will be quantified, to the maximum extent practicable, with the same degree of assurance with which emissions are quantified for sources subject to subpart H of part 75 of this chapter.

(j) Each SIP revision must show that the State has legal authority to carry out the SIP revision, including authority to:

(1) Adopt emissions standards and limitations and any other measures necessary for attainment and maintenance of the State's relevant Annual EGU NO_X Budget or the Annual Non-

EGU NO_X Reduction Requirement, as applicable, under paragraph (e) of this section;

(2) Enforce applicable laws, regulations, and standards and seek injunctive relief;

(3) Obtain information necessary to determine whether air pollution sources are in compliance with applicable laws, regulations, and standards, including authority to require recordkeeping and to make inspections and conduct tests of air pollution sources; and

(4)(i) Require owners or operators of stationary sources to install, maintain, and use emissions monitoring devices and to make periodic reports to the State on the nature and amounts of emissions from such stationary sources; and

(ii) Make the data described in paragraph (j)(4)(i) of this section available to the public within a reasonable time after being reported and as correlated with any applicable emissions standards or limitations.

(k)(1) The provisions of law or regulation that the State determines provide the authorities required under this section must be specifically identified, and copies of such laws or regulations must be submitted with the SIP revision.

(2) Legal authority adequate to fulfill the requirements of paragraphs (j)(3) and (4) of this section may be delegated to the State under section 114 of the CAA.

(l)(1) A SIP revision may assign legal authority to local agencies in accordance with § 51.232.

(2) Each SIP revision must comply with § 51.240 (regarding general plan requirements).

(m) Each SIP revision must comply with § 51.280 (regarding resources).

(n) Each SIP revision must provide for State compliance with the reporting requirements in § 51.125.

(o)(1) Notwithstanding any other provision of this section, if a State adopts regulations substantively identical to subparts AA through II of part 96 of this chapter (CAIR NO_X Annual Trading Program), incorporates such subparts by reference into its regulations, or adopts regulations that differ substantively from such subparts only as set forth in paragraph (o)(2) of this section, then such emissions trading program in the State's SIP revision is automatically approved as meeting the requirements of paragraph (e) of this section, provided that the State has the legal authority to take such action and to implement its responsibilities under such regulations. Before January 1, 2009, a State's regulations shall be considered to be substantively identical to subparts AA through II of part 96 of this chapter, or differing substantively only as set forth in paragraph (o)(2) of this section, regardless of whether the State's regulations include the definition of ''Biomass'', paragraph (3) of the definition of ''Cogeneration unit'', and the second sentence of the definition of ''Total energy input'' in § 96.102 of this chapter promulgated on October 19, 2007, provided that the State timely submits to the Administrator a SIP revision that revises the State's regulations to include such provisions. Submission to the Administrator of a SIP revision that revises the State's regulations to include such provisions shall be considered timely if the submission is made by January 1, 2009.

(2) If a State adopts an emissions trading program that differs substantively from subparts AA through II of part 96 of this chapter only as follows, then the emissions trading program is approved as set forth in paragraph (o)(1) of this section.

(i) The State may decline to adopt the CAIR NO_X opt-in provisions of:

(A) Subpart II of this part and the provisions applicable only to CAIR NO_X opt-in units in subparts AA through HH of this part;

(B) Section 96.188(b) of this chapter and the provisions of subpart II of this part applicable only to CAIR NO_X opt-in units under § 96.188(b); or

(C) Section 96.188(c) of this chapter and the provisions of subpart II of this part applicable only to CAIR NO_X opt-in units under § 96.188(c).

(ii) The State may decline to adopt the allocation provisions set forth in subpart EE of part 96 of this chapter and may instead adopt any methodology for allocating CAIR NO_X allowances to individual sources, as follows:

(A) The State's methodology must not allow the State to allocate CAIR NO_X allowances for a year in excess of the amount in the State's Annual EGU NO_X Budget for such year;

(B) The State's methodology must require that, for EGUs commencing operation before January 1, 2001, the State will determine, and notify the Administrator of, each unit's allocation of CAIR NO_X allowances by October 31, 2006 for 2009, 2010, and 2011 and by October 31, 2008 and October 31 of each year thereafter for 4th the year after the year of the notification deadline;

(C) The State's methodology must require that, for EGUs commencing operation on or after January 1, 2001, the State will determine, and notify the Administrator of, each unit's allocation of CAIR NO_X allowances by October 31 of the year for which the CAIR NO_X allowances are allocated; and

(D) The State's methodology for allocating the compliance supplement pool must be substantively identical to §97.143 (except that the permitting authority makes the allocations and the Administrator records the allocations made by the permitting authority) or otherwise in accordance with paragraph (e)(4) of this section.

(3) A State that adopts an emissions trading program in accordance with paragraph (o)(1) or (2) of this section is not required to adopt an emissions trading program in accordance with paragraph (aa)(1) or (2) of this section or §96.124(o)(1) or (2).

(4) If a State adopts an emissions trading program that differs substantively from subparts AA through HH of part 96 of this chapter, other than as set forth in paragraph (o)(2) of this section, then such emissions trading program is not automatically approved as set forth in paragraph (o)(1) or (2) of this section and will be reviewed by the Administrator for approvability in accordance with the other provisions of this section, provided that the NO_X allowances issued under such emissions trading program shall not, and the SIP revision shall state that such NO_X allowances shall not, qualify as CAIR NO_X allowances or CAIR NO_X Ozone Season allowances under any emissions trading program approved under paragraphs (o)(1) or (2) or (aa)(1) or (2) of this section.

(p) Notwithstanding any other provision of this section, a State may adopt, and include in a SIP revision submitted by March 31, 2007, regulations relating to the Federal CAIR NO_X Annual Trading Program under subparts AA through HH of part 97 of this chapter as follows:

(1) The State may adopt, as CAIR NO_X allowance allocation provisions replacing the provisions in subpart EE of part 97 of this chapter:

(i) Allocation provisions substantively identical to subpart EE of part 96 of this chapter, under which the permitting authority makes the allocations; or

(ii) Any methodology for allocating CAIR NO_X allowances to individual sources under which the permitting authority makes the allocations, provided that:

(A) The State's methodology must not allow the permitting authority to allocate CAIR NO_X allowances for a year in excess of the amount in the State's Annual EGU NO_X budget for such year.

(B) The State's methodology must require that, for EGUs commencing operation before January 1, 2001, the permitting authority will determine, and notify the Administrator of, each unit's allocation of CAIR NO_X allowances by April 30, 2007 for 2009, 2010, and 2011 and by October 31, 2008 and October 31 of each year thereafter for the 4th year after the year of the notification deadline.

(C) The State's methodology must require that, for EGUs commencing operation on or after January 1, 2001, the permitting authority will determine, and notify the Administrator of, each unit's allocation of CAIR NO_X allowances by October 31 of the year for which the CAIR NO_X allowances are allocated.

(2) The State may adopt, as compliance supplement pool provisions replacing the provisions in §97.143 of this chapter:

(i) Provisions for allocating the State's compliance supplement pool that are substantively identical to §97.143 of this chapter, except that the

permitting authority makes the allocations and the Administrator records the allocations made by the permitting authority;

(ii) Provisions for allocating the State's compliance supplement pool that are substantively identical to § 96.143 of this chapter; or

(iii) Other provisions for allocating the State's compliance supplement pool that are in accordance with paragraph (e)(4) of this section.

(3) The State may adopt CAIR opt-in unit provisions as follows:

(i) Provisions for CAIR opt-in units, including provisions for applications for CAIR opt-in permits, approval of CAIR opt-in permits, treatment of units as CAIR opt-in units, and allocation and recordation of CAIR NO_X allowances for CAIR opt-in units, that are substantively identical to subpart II of part 96 of this chapter and the provisions of subparts AA through HH that are applicable to CAIR opt-in units or units for which a CAIR opt-in permit application is submitted and not withdrawn and a CAIR opt-in permit is not yet issued or denied;

(ii) Provisions for CAIR opt-in units, including provisions for applications for CAIR opt-in permits, approval of CAIR opt-in permits, treatment of units as CAIR opt-in units, and allocation and recordation of CAIR NO_X allowances for CAIR opt-in units, that are substantively identical to subpart II of part 96 of this chapter and the provisions of subparts AA through HH that are applicable to CAIR opt-in units or units for which a CAIR opt-in permit application is submitted and not withdrawn and a CAIR opt-in permit is not yet issued or denied, except that the provisions exclude § 96.188(b) of this chapter and the provisions of subpart II of part 96 of this chapter that apply only to units covered by § 96.188(b) of this chapter; or

(iii) Provisions for applications for CAIR opt-in units, including provisions for CAIR opt-in permits, approval of CAIR opt-in permits, treatment of units as CAIR opt-in units, and allocation and recordation of CAIR NO_X allowances for CAIR opt-in units, that are substantively identical to subpart II of part 96 of this chapter and the provisions of subparts AA through HH that are applicable to CAIR opt-in units or units for which a CAIR opt-in permit application is submitted and not withdrawn and a CAIR opt-in permit is not yet issued or denied, except that the provisions exclude § 96.188(c) of this chapter and the provisions of subpart II of part 96 of this chapter that apply only to units covered by § 96.188(c) of this chapter.

(q) The State's SIP revision shall contain control measures and demonstrate that they will result in compliance with the State's Ozone Season EGU NO_X Budget, if applicable, and achieve the State's Ozone Season Non-EGU NO_X Reduction Requirement, if applicable, for the appropriate periods. The amounts of the State's Ozone Season EGU NO_X Budget and Ozone Season Non-EGU NO_X Reduction Requirement shall be determined as follows:

(1)(i) The Ozone Season EGU NO_X Budget for the State is defined as the total amount of NO_X emissions from all EGUs in that State for an ozone season, if the State meets the requirements of paragraph (a)(2) of this section by imposing control measures, at least in part, on EGUs. If the State imposes control measures under this section on only EGUs, the Ozone Season EGU NO_X Budget for the State shall not exceed the amount, during the indicated periods, specified in paragraph (q)(2) of this section.

(ii) The Ozone Season Non-EGU NO_X Reduction Requirement, if applicable, is defined as the total amount of NO_X emission reductions that the State demonstrates, in accordance with paragraph (s) of this section, it will achieve from non-EGUs during the appropriate period. If the State meets the requirements of paragraph (a)(2) of this section by imposing control measures on only non-EGUs, then the State's Ozone Season Non-EGU NO_X Reduction Requirement shall equal or exceed, during the appropriate periods, the amount determined in accordance with paragraph (q)(3) of this section.

(iii) If a State meets the requirements of paragraph (a)(2) of this section by imposing control measures on both EGUs and non-EGUs, then:

(A) The Ozone Season Non-EGU NO_X Reduction Requirement shall equal or exceed the difference between the

amount specified in paragraph (q)(2) of this section for the appropriate period and the amount of the State's Ozone Season EGU NO_X Budget specified in the SIP revision for the appropriate period; and

(B) The Ozone Season EGU NO_X Budget shall not exceed, during the indicated periods, the amount specified in paragraph (q)(2) of this section plus the amount of the Ozone Season Non-EGU NO_X Reduction Requirement under paragraph (q)(1)(iii)(A) of this section for the appropriate period.

(2) For a State that complies with the requirements of paragraph (a)(2) of this section by imposing control measures on only EGUs, the amount of the Ozone Season EGU NO_X Budget, in tons of NO_X per ozone season, shall be as follows, for the indicated State for the indicated period:

State	Ozone season EGU NO_X budget for 2009–2014 (tons)	Ozone season EGU NO_X budget for 2015 and thereafter (tons)
Alabama	32,182	26,818
Arkansas	11,515	9,596
Connecticut	2,559	2,559
Delaware	2,226	1,855
District of Columbia	112	94
Florida	47,912	39,926
Illinois	30,701	28,981
Indiana	45,952	39,273
Iowa	14,263	11,886
Kentucky	36,045	30,587
Louisiana	17,085	14,238
Maryland	12,834	10,695
Massachusetts	7,551	6,293
Michigan	28,971	24,142
Mississippi	8,714	7,262
Missouri	26,678	22,231
New Jersey	6,654	5,545
New York	20,632	17,193
North Carolina	28,392	23,660
Ohio	45,664	39,945
Pennsylvania	42,171	35,143
South Carolina	15,249	12,707
Tennessee	22,842	19,035
Virginia	15,994	13,328
West Virginia	26,859	26,525
Wisconsin	17,987	14,989

(3) For a State that complies with the requirements of paragraph (a)(2) of this section by imposing control measures on only non-EGUs, the amount of the Ozone Season Non-EGU NO_X Reduction Requirement, in tons of NO_X per ozone season, shall be determined, for the State for 2009 and thereafter, by subtracting the amount of the State's Ozone Season EGU NO_X Budget for the appropriate year, specified in paragraph (q)(2) of this section, from the amount of the State's NO_X baseline EGU emissions inventory projected for the ozone season in the appropriate year, specified in Table 7 of ''Regional and State SO_2 and NO_X Budgets'', March 2005 (available at: *http://www.epa.gov/cleanairinterstaterule*).

(4) Notwithstanding the State's obligation to comply with paragraph (q)(2) or (3) of this section, the State's SIP revision may allow sources required by the revision to implement NO_X emission control measures to demonstrate compliance using NO_X SIP Call allowances allocated under the NO_X Budget Trading Program for any ozone season during 2003 through 2008 that have not been deducted by the Administrator under the NO_X Budget Trading Program, if the SIP revision ensures that such allowances will not be available for such deduction under the NO_X Budget Trading Program.

(r) Each SIP revision must set forth control measures to meet the amounts specified in paragraph (q) of this section, as applicable, including the following:

(1) A description of enforcement methods including, but not limited to:

(i) Procedures for monitoring compliance with each of the selected control measures;

(ii) Procedures for handling violations; and

(iii) A designation of agency responsibility for enforcement of implementation.

(2)(i) If a State elects to impose control measures on EGUs, then those measures must impose an ozone season NO_X mass emissions cap on all such sources in the State.

(ii) If a State elects to impose control measures on fossil fuel-fired non-EGUs that are boilers or combustion turbines with a maximum design heat input greater than 250 mmBtu/hr, then those measures must impose an ozone season NO_X mass emissions cap on all such sources in the State.

(iii) If a State elects to impose control measures on non-EGUs other than those described in paragraph (r)(2)(ii) of this section, then those measures must impose an ozone season NO_X mass emissions cap on all such sources in

the State or the State must demonstrate why such emissions cap is not practicable and adopt alternative requirements that ensure that the State will comply with its requirements under paragraph (q) of this section, as applicable, in 2009 and subsequent years.

(s)(1) Each SIP revision that contains control measures covering non-EGUs as part or all of a State's obligation in meeting its requirement under paragraph (a)(2) of this section must demonstrate that such control measures are adequate to provide for the timely compliance with the State's Ozone Season Non-EGU NO_X Reduction Requirement under paragraph (q) of this section and are not adopted or implemented by the State, as of May 12, 2005, and are not adopted or implemented by the federal government, as of the date of submission of the SIP revision by the State to EPA.

(2) The demonstration under paragraph (s)(1) of this section must include the following, with respect to each source category of non-EGUs for which the SIP revision requires control measures:

(i) A detailed historical baseline inventory of NO_X mass emissions from the source category in a representative ozone season consisting, at the State's election, of the ozone season in 2002, 2003, 2004, or 2005, or an average of 2 or more of those ozone seasons, absent the control measures specified in the SIP revision.

(A) This inventory must represent estimates of actual emissions based on monitoring data in accordance with subpart H of part 75 of this chapter, if the source category is subject to monitoring requirements in accordance with subpart H of part 75 of this chapter.

(B) In the absence of monitoring data in accordance with subpart H of part 75 of this chapter, actual emissions must be quantified, to the maximum extent practicable, with the same degree of assurance with which emissions are quantified for sources subject to subpart H of part 75 of this chapter and using source-specific or source-category-specific assumptions that ensure a source's or source category's actual emissions are not overestimated. If a State uses factors to estimate emissions, production or utilization, or effectiveness of controls or rules for a source category, such factors must be chosen to ensure that emissions are not overestimated.

(C) For measures to reduce emissions from motor vehicles, emission estimates must be based on an emissions model that has been approved by EPA for use in SIP development and must be consistent with the planning assumptions regarding vehicle miles traveled and other factors current at the time of the SIP development.

(D) For measures to reduce emissions from nonroad engines or vehicles, emission estimates methodologies must be approved by EPA.

(ii) A detailed baseline inventory of NO_X mass emissions from the source category in ozone seasons 2009 and 2015, absent the control measures specified in the SIP revision and reflecting changes in these emissions from the historical baseline ozone season to the ozone seasons 2009 and 2015, based on projected changes in the production input or output, population, vehicle miles traveled, economic activity, or other factors as applicable to this source category.

(A) These inventories must account for implementation of any control measures that are adopted or implemented by the State, as of May 12, 2005, or adopted or implemented by the federal government, as of the date of submission of the SIP revision by the State to EPA, and must exclude any control measures specified in the SIP revision to meet the NO_X emissions reduction requirements of this section.

(B) Economic and population forecasts must be as specific as possible to the applicable industry, State, and county of the source or source category and must be consistent with both national projections and relevant official planning assumptions including estimates of population and vehicle miles traveled developed through consultation between State and local transportation and air quality agencies. However, if these official planning assumptions are inconsistent with official U.S. Census projections of population or with energy consumption projections contained in the U.S. Department of Energy's most recent Annual Energy

Outlook, then the SIP revision must make adjustments to correct the inconsistency or must demonstrate how the official planning assumptions are more accurate.

(C) These inventories must account for any changes in production method, materials, fuels, or efficiency that are expected to occur between the historical baseline ozone season and ozone season 2009 or ozone season 2015, as appropriate.

(iii) A projection of NO_X mass emissions in ozone season 2009 and ozone season 2015 from the source category assuming the same projected changes as under paragraph (s)(2)(ii) of this section and resulting from implementation of each of the control measures specified in the SIP revision.

(A) These inventories must address the possibility that the State's new control measures may cause production or utilization, and emissions, to shift to unregulated or less stringently regulated sources in the source category in the same or another State, and these inventories must include any such amounts of emissions that may shift to such other sources.

(B) The State must provide EPA with a summary of the computations, assumptions, and judgments used to determine the degree of reduction in projected ozone season 2009 and ozone season 2015 NO_X emissions that will be achieved from the implementation of the new control measures compared to the relevant baseline emissions inventory.

(iv) The result of subtracting the amounts in paragraph (s)(2)(iii) of this section for ozone season 2009 and ozone season 2015, respectively, from the lower of the amounts in paragraph (s)(2)(i) or (s)(2)(ii) of this section for ozone season 2009 and ozone season 2015, respectively, may be credited towards the State's Ozone Season Non-EGU NO_X Reduction Requirement in paragraph (q)(3) of this section for the appropriate period.

(v) Each SIP revision must identify the sources of the data used in each estimate and each projection of emissions.

(t) Each SIP revision must comply with §51.116 (regarding data availability).

(u) Each SIP revision must provide for monitoring the status of compliance with any control measures adopted to meet the State's requirements under paragraph (q) of this section as follows:

(1) The SIP revision must provide for legally enforceable procedures for requiring owners or operators of stationary sources to maintain records of, and periodically report to the State:

(i) Information on the amount of NO_X emissions from the stationary sources; and

(ii) Other information as may be necessary to enable the State to determine whether the sources are in compliance with applicable portions of the control measures;

(2) The SIP revision must comply with §51.212 (regarding testing, inspection, enforcement, and complaints);

(3) If the SIP revision contains any transportation control measures, then the SIP revision must comply with §51.213 (regarding transportation control measures);

(4)(i) If the SIP revision contains measures to control EGUs, then the SIP revision must require such sources to comply with the monitoring, recordkeeping, and reporting provisions of subpart H of part 75 of this chapter.

(ii) If the SIP revision contains measures to control fossil fuel-fired non-EGUs that are boilers or combustion turbines with a maximum design heat input greater than 250 mmBtu/hr, then the SIP revision must require such sources to comply with the monitoring, recordkeeping, and reporting provisions of subpart H of part 75 of this chapter.

(iii) If the SIP revision contains measures to control any other non-EGUs that are not described in paragraph (u)(4)(ii) of this section, then the SIP revision must require such sources to comply with the monitoring, recordkeeping, and reporting provisions of subpart H of part 75 of this chapter, or the State must demonstrate why such requirements are not practicable and adopt alternative requirements that ensure that the required emissions reductions will be quantified, to the maximum extent practicable, with the same degree of assurance with which emissions are quantified for sources

subject to subpart H of part 75 of this chapter.

(v) Each SIP revision must show that the State has legal authority to carry out the SIP revision, including authority to:

(1) Adopt emissions standards and limitations and any other measures necessary for attainment and maintenance of the State's relevant Ozone Season EGU NO_X Budget or the Ozone Season Non-EGU NO_X Reduction Requirement, as applicable, under paragraph (q) of this section;

(2) Enforce applicable laws, regulations, and standards and seek injunctive relief;

(3) Obtain information necessary to determine whether air pollution sources are in compliance with applicable laws, regulations, and standards, including authority to require recordkeeping and to make inspections and conduct tests of air pollution sources; and

(4)(i) Require owners or operators of stationary sources to install, maintain, and use emissions monitoring devices and to make periodic reports to the State on the nature and amounts of emissions from such stationary sources; and

(ii) Make the data described in paragraph (v)(4)(i) of this section available to the public within a reasonable time after being reported and as correlated with any applicable emissions standards or limitations.

(w)(1) The provisions of law or regulation that the State determines provide the authorities required under this section must be specifically identified, and copies of such laws or regulations must be submitted with the SIP revision.

(2) Legal authority adequate to fulfill the requirements of paragraphs (v)(3) and (4) of this section may be delegated to the State under section 114 of the CAA.

(x)(1) A SIP revision may assign legal authority to local agencies in accordance with § 51.232.

(2) Each SIP revision must comply with § 51.240 (regarding general plan requirements).

(y) Each SIP revision must comply with § 51.280 (regarding resources).

(z) Each SIP revision must provide for State compliance with the reporting requirements in § 51.125.

(aa)(1) Notwithstanding any other provision of this section, if a State adopts regulations substantively identical to subparts AAAA through IIII of part 96 of this chapter (CAIR Ozone Season NO_X Trading Program), incorporates such subparts by reference into its regulations, or adopts regulations that differ substantively from such subparts only as set forth in paragraph (aa)(2) of this section, then such emissions trading program in the State's SIP revision is automatically approved as meeting the requirements of paragraph (q) of this section, provided that the State has the legal authority to take such action and to implement its responsibilities under such regulations. Before January 1, 2009, a State's regulations shall be considered to be substantively identical to subparts AAAA through IIII of part 96 of the chapter, or differing substantively only as set forth in paragraph (o)(2) of this section, regardless of whether the State's regulations include the definition of ''Biomass'', paragraph (3) of the definition of ''Cogeneration unit'', and the second sentence of the definition of ''Total energy input'' in § 96.302 of this chapter promulgated on October 19, 2007, provided that the State timely submits to the Administrator a SIP revision that revises the State's regulations to include such provisions. Submission to the Administrator of a SIP revision that revises the State's regulations to include such provisions shall be considered timely if the submission is made by January 1, 2009.

(2) If a State adopts an emissions trading program that differs substantively from subparts AAAA through IIII of part 96 of this chapter only as follows, then the emissions trading program is approved as set forth in paragraph (aa)(1) of this section.

(i) The State may expand the applicability provisions in § 96.304 to include all non-EGUs subject to the State's emissions trading program approved under § 51.121(p).

(ii) The State may decline to adopt the CAIR NO_X Ozone Season opt-in provisions of:

(A) Subpart IIII of this part and the provisions applicable only to CAIR NO_X Ozone Season opt-in units in subparts AAAA through HHHH of this part;

(B) Section 96.388(b) of this chapter and the provisions of subpart IIII of this part applicable only to CAIR NO_X Ozone Season opt-in units under §96.388(b); or

(C) Section 96.388(c) of this chapter and the provisions of subpart IIII of this part applicable only to CAIR NO_X Ozone Season opt-in units under §96.388(c).

(iii) The State may decline to adopt the allocation provisions set forth in subpart EEEE of part 96 of this chapter and may instead adopt any methodology for allocating CAIR NO_X Ozone Season allowances to individual sources, as follows:

(A) The State may provide for issuance of an amount of CAIR Ozone Season NO_X allowances for an ozone season, in addition to the amount in the State's Ozone Season EGU NO_X Budget for such ozone season, not exceeding the amount of NO_X SIP Call allowances allocated for the ozone season under the NO_X Budget Trading Program to non-EGUs that the applicability provisions in §96.304 are expanded to include under paragraph (aa)(2)(i) of this section;

(B) The State's methodology must not allow the State to allocate CAIR Ozone Season NO_X allowances for an ozone season in excess of the amount in the State's Ozone Season EGU NO_X Budget for such ozone season plus any additional amount of CAIR Ozone Season NO_X allowances issued under paragraph (aa)(2)(iii)(A) of this section for such ozone season;

(C) The State's methodology must require that, for EGUs commencing operation before January 1, 2001, the State will determine, and notify the Administrator of, each unit's allocation of CAIR NO_X allowances by October 31, 2006 for the ozone seasons 2009, 2010, and 2011 and by October 31, 2008 and October 31 of each year thereafter for the ozone season in the 4th year after the year of the notification deadline; and

(D) The State's methodology must require that, for EGUs commencing operation on or after January 1, 2001, the State will determine, and notify the Administrator of, each unit's allocation of CAIR Ozone Season NO_X allowances by July 31 of the calendar year of the ozone season for which the CAIR Ozone Season NO_X allowances are allocated.

(3) A State that adopts an emissions trading program in accordance with paragraph (aa)(1) or (2) of this section is not required to adopt an emissions trading program in accordance with paragraph (o)(1) or (2) of this section or §51.153(o)(1) or (2).

(4) If a State adopts an emissions trading program that differs substantively from subparts AAAA through IIII of part 96 of this chapter, other than as set forth in paragraph (aa)(2) of this section, then such emissions trading program is not automatically approved as set forth in paragraph (aa)(1) or (2) of this section and will be reviewed by the Administrator for approvability in accordance with the other provisions of this section, provided that the NO_X allowances issued under such emissions trading program shall not, and the SIP revision shall state that such NO_X allowances shall not, qualify as CAIR NO_X allowances or CAIR Ozone Season NO_X allowances under any emissions trading program approved under paragraphs (o)(1) or (2) or (aa)(1) or (2) of this section.

(bb)(1)(i) The State may revise its SIP to provide that, for each ozone season during which a State implements control measures on EGUs or non-EGUs through an emissions trading program approved under paragraph (aa)(1) or (2) of this section, such EGUs and non-EGUs shall not be subject to the requirements of the State's SIP meeting the requirements of §51.121, if the State meets the requirement in paragraph (bb)(1)(ii) of this section.

(ii) For a State under paragraph (bb)(1)(i) of this section, if the State's amount of tons specified in paragraph (q)(2) of this section exceeds the State's amount of NO_X SIP Call allowances allocated for the ozone season in 2009 or in any year thereafter for the same types and sizes of units as those covered by the amount of tons specified in paragraph (q)(2) of this section, then the State must replace the former amount for such ozone season by the

latter amount for such ozone season in applying paragraph (q) of this section.

(2) Rhode Island may revise its SIP to provide that, for each ozone season during which Rhode Island implements control measures on EGUs and non-EGUs through an emissions trading program adopted in regulations that differ substantively from subparts AAAA through IIII of part 96 of this chapter as set forth in this paragraph, such EGUs and non-EGUs shall not be subject to the requirements of the State's SIP meeting the requirements of § 51.121.

(i) Rhode Island must expand the applicability provisions in § 96.304 to include all non-EGUs subject to Rhode Island's emissions trading program approved under § 51.121(p).

(ii) Rhode Island may decline to adopt the CAIR NO_X Ozone Season opt-in provisions of:

(A) Subpart IIII of this part and the provisions applicable only to CAIR NO_X Ozone Season opt-in units in subparts AAAA through HHHH of this part;

(B) Section 96.388(b) of this chapter and the provisions of subpart IIII of this part applicable only to CAIR NO_X Ozone Season opt-in units under § 96.388(b); or

(C) Section 96.388(c) of this chapter and the provisions of subpart IIII of this part applicable only to CAIR NO_X Ozone Season opt-in units under § 96.388(c).

(iii) Rhode Island may adopt the allocation provisions set forth in subpart EEEE of part 96 of this chapter, provided that Rhode Island must provide for issuance of an amount of CAIR Ozone Season NO_X allowances for an ozone season not exceeding 936 tons for 2009 and thereafter;

(iv) Rhode Island may adopt any methodology for allocating CAIR NO_X Ozone Season allowances to individual sources, as follows:

(A) Rhode Island's methodology must not allow Rhode Island to allocate CAIR Ozone Season NO_X allowances for an ozone season in excess of 936 tons for 2009 and thereafter;

(B) Rhode Island's methodology must require that, for EGUs commencing operation before January 1, 2001, Rhode Island will determine, and notify the Administrator of, each unit's allocation of CAIR NO_X allowances by October 31, 2006 for the ozone seasons 2009, 2010, and 2011 and by October 31, 2008 and October 31 of each year thereafter for the ozone season in the 4th year after the year of the notification deadline; and

(C) Rhode Island's methodology must require that, for EGUs commencing operation on or after January 1, 2001, Rhode Island will determine, and notify the Administrator of, each unit's allocation of CAIR Ozone Season NO_X allowances by July 31 of the calendar year of the ozone season for which the CAIR Ozone Season NO_X allowances are allocated.

(3) Notwithstanding a SIP revision by a State authorized under paragraph (bb)(1) of this section or by Rhode Island under paragraph (bb)(2) of this section, if the State's or Rhode Island's SIP that, without such SIP revision, imposes control measures on EGUs or non-EGUs under § 51.121 is determined by the Administrator to meet the requirements of § 51.121, such SIP shall be deemed to continue to meet the requirements of § 51.121.

(cc) The terms used in this section shall have the following meanings:

Administrator means the Administrator of the United States Environmental Protection Agency or the Administrator's duly authorized representative.

Allocate or *allocation* means, with regard to allowances, the determination of the amount of allowances to be initially credited to a source or other entity.

Biomass means—

(1) Any organic material grown for the purpose of being converted to energy;

(2) Any organic byproduct of agriculture that can be converted into energy; or

(3) Any material that can be converted into energy and is nonmerchantable for other purposes, that is segregated from other nonmerchantable material, and that is;

(i) A forest-related organic resource, including mill residues, precommercial thinnings, slash, brush, or byproduct from conversion of trees to merchantable material; or

(ii) A wood material, including pallets, crates, dunnage, manufacturing and construction materials (other than pressure-treated, chemically-treated, or painted wood products), and landscape or right-of-way tree trimmings.

Boiler means an enclosed fossil- or other-fuel-fired combustion device used to produce heat and to transfer heat to recirculating water, steam, or other medium.

Bottoming-cycle cogeneration unit means a cogeneration unit in which the energy input to the unit is first used to produce useful thermal energy and at least some of the reject heat from the useful thermal energy application or process is then used for electricity production.

Clean Air Act or *CAA* means the Clean Air Act, 42 U.S.C. 7401, *et seq*.

Cogeneration unit means a stationary, fossil-fuel-fired boiler or stationary, fossil-fuel-fired combustion turbine:

(1) Having equipment used to produce electricity and useful thermal energy for industrial, commercial, heating, or cooling purposes through the sequential use of energy; and

(2) Producing during the 12-month period starting on the date the unit first produces electricity and during any calendar year after the calendar year in which the unit first produces electricity—

(i) For a topping-cycle cogeneration unit,

(A) Useful thermal energy not less than 5 percent of total energy output; and

(B) Useful power that, when added to one-half of useful thermal energy produced, is not less then 42.5 percent of total energy input, if useful thermal energy produced is 15 percent or more of total energy output, or not less than 45 percent of total energy input, if useful thermal energy produced is less than 15 percent of total energy output.

(ii) For a bottoming-cycle cogeneration unit, useful power not less than 45 percent of total energy input;

(3) Provided that the total energy input under paragraphs (2)(i)(B) and (2)(ii) of this definition shall equal the unit's total energy input from all fuel except biomass if the unit is a boiler.

Combustion turbine means:

(1) An enclosed device comprising a compressor, a combustor, and a turbine and in which the flue gas resulting from the combustion of fuel in the combustor passes through the turbine, rotating the turbine; and

(2) If the enclosed device under paragraph (1) of this definition is combined cycle, any associated duct burner, heat recovery steam generator, and steam turbine.

Commence operation means to have begun any mechanical, chemical, or electronic process, including, with regard to a unit, start-up of a unit's combustion chamber.

Electric generating unit or *EGU* means:

(1)(i) Except as provided in paragraph (2) of this definition, a stationary, fossil-fuel-fired boiler or stationary, fossil-fuel-fired combustion turbine serving at any time, since the later of November 15, 1990 or the start-up of the unit's combustion chamber, a generator with nameplate capacity of more than 25 MWe producing electricity for sale.

(ii) If a stationary boiler or stationary combustion turbine that, under paragraph (1)(i) of this section, is not an electric generating unit begins to combust fossil fuel or to serve a generator with nameplate capacity of more than 25 MWe producing electricity for sale, the unit shall become an electric generating unit as provided in paragraph (1)(i) of this section on the first date on which it both combusts fossil fuel and serves such generator.

(2) A unit that meets the requirements set forth in paragraphs (2)(i)(A), (2)(ii)(A), or (2)(ii)(B) of this definition paragraph shall not be an electric generating unit:

(i)(A) Any unit that is an electric generating unit under paragraph (1)(i) or (ii) of this definition:

(*1*) Qualifying as a cogeneration unit during the 12-month period starting on the date the unit first produces electricity and continuing to qualify as a cogeneration unit; and

(*2*) Not serving at any time, since the later of November 15, 1990 or the start-up of the unit's combustion chamber, a generator with nameplate capacity of more than 25 MWe supplying in any calendar year more than one-third of

the unit's potential electric output capacity or 219,000 MWh, whichever is greater, to any utility power distribution system for sale.

(B) If a unit qualifies as a cogeneration unit during the 12-month period starting on the date the unit first produces electricity and meets the requirements of paragraphs (2)(i)(A) of this section for at least one calendar year, but subsequently no longer meets all such requirements, the unit shall become an electric generating unit starting on the earlier of January 1 after the first calendar year during which the unit first no longer qualifies as a cogeneration unit or January 1 after the first calendar year during which the unit no longer meets the requirements of paragraph (2)(i)(A)(*2*) of this section.

(ii)(A) Any unit that is an electric generating unit under paragraph (1)(i) or (ii) of this definition commencing operation before January 1, 1985:

(*1*) Qualifying as a solid waste incineration unit; and

(*2*) With an average annual fuel consumption of non-fossil fuel for 1985–1987 exceeding 80 percent (on a Btu basis) and an average annual fuel consumption of non-fossil fuel for any 3 consecutive calendar years after 1990 exceeding 80 percent (on a Btu basis).

(B) Any unit that is an electric generating unit under paragraph (1)(i) or (ii) of this definition commencing operation on or after January 1, 1985:

(*1*) Qualifying as a solid waste incineration unit; and

(*2*) With an average annual fuel consumption of non-fossil fuel for the first 3 calendar years of operation exceeding 80 percent (on a Btu basis) and an average annual fuel consumption of non-fossil fuel for any 3 consecutive calendar years after 1990 exceeding 80 percent (on a Btu basis).

(C) If a unit qualifies as a solid waste incineration unit and meets the requirements of paragraph (2)(ii)(A) or (B) of this section for at least 3 consecutive calendar years, but subsequently no longer meets all such requirements, the unit shall become an electric generating unit starting on the earlier of January 1 after the first calendar year during which the unit first no longer qualifies as a solid waste incineration unit or January 1 after the first 3 consecutive calendar years after 1990 for which the unit has an average annual fuel consumption of fossil fuel of 20 percent or more.

Fossil fuel means natural gas, petroleum, coal, or any form of solid, liquid, or gaseous fuel derived from such material.

Fossil-fuel-fired means, with regard to a unit, combusting any amount of fossil fuel in any calendar year.

Generator means a device that produces electricity.

Maximum design heat input means the maximum amount of fuel per hour (in Btu/hr) that a unit is capable of combusting on a steady state basis as of the initial installation of the unit as specified by the manufacturer of the unit.

NAAQS means National Ambient Air Quality Standard.

Nameplate capacity means, starting from the initial installation of a generator, the maximum electrical generating output (in MWe) that the generator is capable of producing on a steady state basis and during continuous operation (when not restricted by seasonal or other deratings) as of such installation as specified by the manufacturer of the generator or, starting from the completion of any subsequent physical change in the generator resulting in an increase in the maximum electrical generating output (in MWe) that the generator is capable of producing on a steady state basis and during continuous operation (when not restricted by seasonal or other deratings), such increased maximum amount as of such completion as specified by the person conducting the physical change.

Non-EGU means a source of NO_X emissions that is not an EGU.

NO_X Budget Trading Program means a multi-state nitrogen oxides air pollution control and emission reduction program approved and administered by the Administrator in accordance with subparts A through I of this part and § 51.121, as a means of mitigating interstate transport of ozone and nitrogen oxides.

NO_X SIP Call allowance means a limited authorization issued by the Administrator under the NO_X Budget

Trading Program to emit up to one ton of nitrogen oxides during the ozone season of the specified year or any year thereafter, provided that the provision in §51.121(b)(2)(ii)(E) shall not be used in applying this definition.

Ozone season means the period, which begins May 1 and ends September 30 of any year.

Potential electrical output capacity means 33 percent of a unit's maximum design heat input, divided by 3,413 Btu/kWh, divided by 1,000 kWh/MWh, and multiplied by 8,760 hr/yr.

Sequential use of energy means:

(1) For a topping-cycle cogeneration unit, the use of reject heat from electricity production in a useful thermal energy application or process; or

(2) For a bottoming-cycle cogeneration unit, the use of reject heat from useful thermal energy application or process in electricity production.

Solid waste incineration unit means a stationary, fossil-fuel-fired boiler or stationary, fossil-fuel-fired combustion turbine that is a ''solid waste incineration unit'' as defined in section 129(g)(1) of the Clean Air Act.

Topping-cycle cogeneration unit means a cogeneration unit in which the energy input to the unit is first used to produce useful power, including electricity, and at least some of the reject heat from the electricity production is then used to provide useful thermal energy.

Total energy input means, with regard to a cogeneration unit, total energy of all forms supplied to the cogeneration unit, excluding energy produced by the cogeneration unit itself. Each form of energy supplied shall be measured by the lower heating value of that form of energy calculated as follows:

$$LHV = HHV - 10.55(W + 9H)$$

Where:

LHV = lower heating value of fuel in Btu/lb,
HHV = higher heating value of fuel in Btu/lb,
W = Weight % of moisture in fuel, and
H = Weight % of hydrogen in fuel.

Total energy output means, with regard to a cogeneration unit, the sum of useful power and useful thermal energy produced by the cogeneration unit.

Unit means a stationary, fossil-fuel-fired boiler or a stationary, fossil-fuel-fired combustion turbine.

Useful power means, with regard to a cogeneration unit, electricity or mechanical energy made available for use, excluding any such energy used in the power production process (which process includes, but is not limited to, any on-site processing or treatment of fuel combusted at the unit and any on-site emission controls).

Useful thermal energy means, with regard to a cogeneration unit, thermal energy that is:

(1) Made available to an industrial or commercial process, excluding any heat contained in condensate return or makeup water;

(2) Used in a heating application (e.g., space heating or domestic hot water heating); or

(3) Used in a space cooling application (*i.e.*, thermal energy used by an absorption chiller).

Utility power distribution system means the portion of an electricity grid owned or operated by a utility and dedicated to delivering electricity to customers.

(dd) New Hampshire may revise its SIP to implements control measures on EGUs and non-EGUs through an emissions trading program adopted in regulations that differ substantively from subparts AAAA through IIII of part 96 of this chapter as set forth in this paragraph.

(1) New Hampshire must expand the applicability provisions in §96.304 of this chapter to include all non-EGUs subject to New Hampshire's emissions trading program at New Hampshire Code of Administrative Rules, chapter Env-A 3200 (2004).

(2) New Hampshire may decline to adopt the CAIR NO_X Ozone Season opt-in provisions of:

(i) Subpart IIII of this part and the provisions applicable only to CAIR NO_X Ozone Season opt-in units in subparts AAAA through HHHH of this part;

(ii) Section 96.388(b) of this chapter and the provisions of subpart IIII of this part applicable only to CAIR NO_X Ozone Season opt-in units under §96.388(b); or

(iii) Section 96.388(c) of this chapter and the provisions of subpart IIII of this part applicable only to CAIR NO_X Ozone Season opt-in units under §96.388(c).

(3) New Hampshire may adopt the allocation provisions set forth in subpart EEEE of part 96 of this chapter, provided that New Hampshire must provide for issuance of an amount of CAIR Ozone Season NO_X allowances for an ozone season not exceeding 3,000 tons for 2009 and thereafter;

(4) New Hampshire may adopt any methodology for allocating CAIR NO_X Ozone Season allowances to individual sources, as follows:

(i) New Hampshire's methodology must not allow New Hampshire to allocate CAIR Ozone Season NO_X allowances for an ozone season in excess of 3,000 tons for 2009 and thereafter;

(ii) New Hampshire's methodology must require that, for EGUs commencing operation before January 1, 2001, New Hampshire will determine, and notify the Administrator of, each unit's allocation of CAIR NO_X allowances by October 31, 2006 for the ozone seasons 2009, 2010, and 2011 and by October 31, 2008 and October 31 of each year thereafter for the ozone season in the 4th year after the year of the notification deadline; and

(iii) New Hampshire's methodology must require that, for EGUs commencing operation on or after January 1, 2001, New Hampshire will determine, and notify the Administrator of, each unit's allocation of CAIR Ozone Season NO_X allowances by July 31 of the calendar year of the ozone season for which the CAIR Ozone Season NO_X allowances are allocated.

(ee) Notwithstanding any other provision of this section, a State may adopt, and include in a SIP revision submitted by March 31, 2007, regulations relating to the Federal CAIR NO_X Ozone Season Trading Program under subparts AAAA through HHHH of part 97 of this chapter as follows:

(1) The State may adopt, as applicability provisions replacing the provisions in § 97.304 of this chapter, provisions for applicability that are substantively identical to the provisions in § 96.304 of this chapter expanded to include all non-EGUs subject to the State's emissions trading program approved under § 51.121(p). Before January 1, 2009, a State's applicability provisions shall be considered to be substantively identical to § 96.304 of this chapter (with the expansion allowed under this paragraph) regardless of whether the State's regulations include the definition of ''Biomass'', paragraph (3) of the definition of ''Cogeneration unit'', and the second sentence of the definition of ''Total energy input'' in § 97.102 of this chapter promulgated on October 19, 2007, provided that the State timely submits to the Administrator a SIP revision that revises the State's regulations to include such provisions. Submission to the Administrator of a SIP revision that revises the State's regulations to include such provisions shall be considered timely if the submission is made by January 1, 2009.

(2) The State may adopt, as CAIR NO_X Ozone Season allowance allocation provisions replacing the provisions in subpart EEEE of part 97 of this chapter:

(i) Allocation provisions substantively identical to subpart EEEE of part 96 of this chapter, under which the permitting authority makes the allocations; or

(ii) Any methodology for allocating CAIR NO_X Ozone Season allowances to individual sources under which the permitting authority makes the allocations, provided that:

(A) The State may provide for issuance of an amount of CAIR Ozone Season NO_X allowances for an ozone season, in addition to the amount in the State's Ozone Season EGU NO_X Budget for such ozone season, not exceeding the portion of the State's trading program budget, under the State's emissions trading program approved under § 51.121(p), attributed to the non-EGUs that the applicability provisions in § 96.304 of this chapter are expanded to include under paragraph (ee)(1) of this section.

(B) The State's methodology must not allow the State to allocate CAIR Ozone Season NO_X allowances for an ozone season in excess of the amount in the State's Ozone Season EGU NO_X Budget for such ozone season plus any additional amount of CAIR Ozone Season NO_X allowances issued under paragraph (ee)(2)(ii)(A) of this section for such ozone season.

(C) The State's methodology must require that, for EGUs commencing operation before January 1, 2001, the permitting authority will determine, and notify the Administrator of, each unit's allocation of CAIR NO_X Ozone Season allowances by April 30, 2007 for 2009, 2010, and 2011 and by October 31, 2008 and October 31 of each year thereafter for the 4th year after the year of the notification deadline.

(D) The State's methodology must require that, for EGUs commencing operation on or after January 1, 2001, the permitting authority will determine, and notify the Administrator of, each unit's allocation of CAIR NO_X Ozone Season allowances by July 31 of the year for which the CAIR NO_X Ozone Season allowances are allocated.

(3) The State may adopt CAIR opt-in unit provisions as follows:

(i) Provisions for CAIR opt-in units, including provisions for applications for CAIR opt-in permits, approval of CAIR opt-in permits, treatment of units as CAIR opt-in units, and allocation and recordation of CAIR NO_X Ozone Season allowances for CAIR opt-in units, that are substantively identical to subpart IIII of part 96 of this chapter and the provisions of subparts AAAA through HHHH that are applicable to CAIR opt-in units or units for which a CAIR opt-in permit application is submitted and not withdrawn and a CAIR opt-in permit is not yet issued or denied;

(ii) Provisions for CAIR opt-in units, including provisions for applications for CAIR opt-in permits, approval of CAIR opt-in permits, treatment of units as CAIR opt-in units, and allocation and recordation of CAIR NO_X Ozone Season allowances for CAIR opt-in units, that are substantively identical to subpart IIII of part 96 of this chapter and the provisions of subparts AAAA through HHHH that are applicable to CAIR opt-in units or units for which a CAIR opt-in permit application is submitted and not withdrawn and a CAIR opt-in permit is not yet issued or denied, except that the provisions exclude §96.388(b) of this chapter and the provisions of subpart IIII of part 96 of this chapter that apply only to units covered by §96.388(b) of this chapter; or

(iii) Provisions for applications for CAIR opt-in units, including provisions for CAIR opt-in permits, approval of CAIR opt-in permits, treatment of units as CAIR opt-in units, and allocation and recordation of CAIR NO_X allowances for CAIR opt-in units, that are substantively identical to subpart IIII of part 96 of this chapter and the provisions of subparts AAAA through HHHH that are applicable to CAIR opt-in units or units for which a CAIR opt-in permit application is submitted and not withdrawn and a CAIR opt-in permit is not yet issued or denied, except that the provisions exclude §96.388(c) of this chapter and the provisions of subpart IIII of part 96 of this chapter that apply only to units covered by §96.388(c) of this chapter.

(ff) Notwithstanding any provisions of paragraphs (a) through (ee) of this section, subparts AA through II and AAAA through IIII of part 96 of this chapter, subparts AA through II and AAAA through IIII of part 97 of this chapter, and any State's SIP to the contrary:

(1) With regard to any control period that begins after December 31, 2011, the Administrator:

(i) Rescinds the determination in paragraph (a) of this section that the States identified in paragraph (c) of this section must submit a SIP revision with respect to the fine particles ($PM_{2.5}$) NAAQS and the 8-hour ozone NAAQS meeting the requirements of paragraphs (b) through (ee) of this section; and

(ii) Will not carry out any of the functions set forth for the Administrator in subparts AA through II and AAAA through IIII of part 96 of this chapter, subparts AA through II and AAAA through IIII of part 97 of this chapter, or in any emissions trading program provisions in a State's SIP approved under this section;

(2) The Administrator will not deduct for excess emissions any CAIR NO_X allowances or CAIR NO_X Ozone Season allowances allocated for 2012 or any year thereafter;

(3) By November 7, 2011, the Administrator will remove from the CAIR NO_X Allowance Tracking System accounts all CAIR NO_X allowances allocated for

a control period in 2012 and any subsequent year, and, thereafter, no holding or surrender of CAIR NO_X allowances will be required with regard to emissions or excess emissions for such control periods; and

(4) By November 7, 2011, the Administrator will remove from the CAIR NO_X Ozone Season Allowance Tracking System accounts all CAIR NO_X Ozone Season allowances allocated for a control period in 2012 and any subsequent year, and, thereafter, no holding or surrender of CAIR NO_X Ozone Season allowances will be required with regard to emissions or excess emissions for such control periods.

[70 FR 25319, May 12, 2005, as amended at 71 FR 25301, 25370, Apr. 28, 2006; 71 FR 74793, Dec. 13, 2006; 72 FR 59203, Oct. 19, 2007; 74 FR 56726, Nov. 3, 2009; 76 FR 48353, Aug. 8, 2011]

§ 51.124 Findings and requirements for submission of State implementation plan revisions relating to emissions of sulfur dioxide pursuant to the Clean Air Interstate Rule.

(a)(1) Under section 110(a)(1) of the CAA, 42 U.S.C. 7410(a)(1), the Administrator determines that each State identified in paragraph (c) of this section must submit a SIP revision to comply with the requirements of section 110(a)(2)(D)(i)(I) of the CAA, 42 U.S.C. 7410(a)(2)(D)(i)(I), through the adoption of adequate provisions prohibiting sources and other activities from emitting SO_2 in amounts that will contribute significantly to nonattainment in, or interfere with maintenance by, one or more other States with respect to the fine particles ($PM_{2.5}$) NAAQS.

(2) Notwithstanding the other provisions of this section, such provisions are not applicable as they relate to the State of Minnesota as of December 3, 2009.

(b) For each State identified in paragraph (c) of this section, the SIP revision required under paragraph (a) of this section will contain adequate provisions, for purposes of complying with section 110(a)(2)(D)(i)(I) of the CAA, 42 U.S.C. 7410(a)(2)(D)(i)(I), only if the SIP revision contains control measures that assure compliance with the applicable requirements of this section.

(c) The following States are subject to the requirements of this section: Alabama, Delaware, Florida, Georgia, Illinois, Indiana, Iowa, Kentucky, Louisiana, Maryland, Michigan, Minnesota, Mississippi, Missouri, New Jersey, New York, North Carolina, Ohio, Pennsylvania, South Carolina, Tennessee, Texas, Virginia, West Virginia, Wisconsin, and the District of Columbia.

(d)(1) The SIP revision under paragraph (a) of this section must be submitted to EPA by no later than September 11, 2006.

(2) The requirements of appendix V to this part shall apply to the SIP revision under paragraph (a) of this section.

(3) The State shall deliver 5 copies of the SIP revision under paragraph (a) of this section to the appropriate Regional Office, with a letter giving notice of such action.

(e) The State's SIP revision shall contain control measures and demonstrate that they will result in compliance with the State's Annual EGU SO_2 Budget, if applicable, and achieve the State's Annual Non-EGU SO_2 Reduction Requirement, if applicable, for the appropriate periods. The amounts of the State's Annual EGU SO_2 Budget and Annual Non-EGU SO_2 Reduction Requirement shall be determined as follows:

(1)(i) The Annual EGU SO_2 Budget for the State is defined as the total amount of SO_2 emissions from all EGUs in that State for a year, if the State meets the requirements of paragraph (a) of this section by imposing control measures, at least in part, on EGUs. If the State imposes control measures under this section on only EGUs, the Annual EGU SO_2 Budget for the State shall not exceed the amount, during the indicated periods, specified in paragraph (e)(2) of this section.

(ii) The Annual Non-EGU SO_2 Reduction Requirement, if applicable, is defined as the total amount of SO_2 emission reductions that the State demonstrates, in accordance with paragraph (g) of this section, it will achieve from non-EGUs during the appropriate period. If the State meets the requirements of paragraph (a) of this section by imposing control measures on only non-EGUs, then the State's Annual Non-EGU SO_2 Reduction Requirement

shall equal or exceed, during the appropriate periods, the amount determined in accordance with paragraph (e)(3) of this section.

(iii) If a State meets the requirements of paragraph (a) of this section by imposing control measures on both EGUs and non-EGUs, then:

(A) The Annual Non-EGU SO_2 Reduction Requirement shall equal or exceed the difference between the amount specified in paragraph (e)(2) of this section for the appropriate period and the amount of the State's Annual EGU SO_2 Budget specified in the SIP revision for the appropriate period; and

(B) The Annual EGU SO_2 Budget shall not exceed, during the indicated periods, the amount specified in paragraph (e)(2) of this section plus the amount of the Annual Non-EGU SO_2 Reduction Requirement under paragraph (e)(1)(iii)(A) of this section for the appropriate period.

(2) For a State that complies with the requirements of paragraph (a) of this section by imposing control measures on only EGUs, the amount of the Annual EGU SO_2 Budget, in tons of SO_2 per year, shall be as follows, for the indicated State for the indicated period:

State	Annual EGU SO_2 budget for 2010–2014 (tons)	Annual EGU SO_2 budget for 2015 and thereafter (tons)
Alabama	157,582	110,307
Delaware	22,411	15,687
District of Columbia	708	495
Florida	253,450	177,415
Georgia	213,057	149,140
Illinois	192,671	134,869
Indiana	254,599	178,219
Iowa	64,095	44,866
Kentucky	188,773	132,141
Louisiana	59,948	41,963
Maryland	70,697	49,488
Michigan	178,605	125,024
Minnesota	49,987	34,991
Mississippi	33,763	23,634
Missouri	137,214	96,050
New Jersey	32,392	22,674
New York	135,139	94,597
North Carolina	137,342	96,139
Ohio	333,520	233,464
Pennsylvania	275,990	193,193
South Carolina	57,271	40,089
Tennessee	137,216	96,051
Texas	320,946	224,662
Virginia	63,478	44,435
West Virginia	215,881	151,117
Wisconsin	87,264	61,085

(3) For a State that complies with the requirements of paragraph (a) of this section by imposing control measures on only non-EGUs, the amount of the Annual Non-EGU SO_2 Reduction Requirement, in tons of SO_2 per year, shall be determined, for the State for 2010 and thereafter, by subtracting the amount of the State's Annual EGU SO_2 Budget for the appropriate year, specified in paragraph (e)(2) of this section, from an amount equal to 2 times the State's Annual EGU SO_2 Budget for 2010 through 2014, specified in paragraph (e)(2) of this section.

(f) Each SIP revision must set forth control measures to meet the amounts specified in paragraph (e) of this section, as applicable, including the following:

(1) A description of enforcement methods including, but not limited to:

(i) Procedures for monitoring compliance with each of the selected control measures;

(ii) Procedures for handling violations; and

(iii) A designation of agency responsibility for enforcement of implementation.

(2)(i) If a State elects to impose control measures on EGUs, then those measures must impose an annual SO_2

mass emissions cap on all such sources in the State.

(ii) If a State elects to impose control measures on fossil fuel-fired non-EGUs that are boilers or combustion turbines with a maximum design heat input greater than 250 mmBtu/hr, then those measures must impose an annual SO_2 mass emissions cap on all such sources in the State.

(iii) If a State elects to impose control measures on non-EGUs other than those described in paragraph (f)(2)(ii) of this section, then those measures must impose an annual SO_2 mass emissions cap on all such sources in the State, or the State must demonstrate why such emissions cap is not practicable, and adopt alternative requirements that ensure that the State will comply with its requirements under paragraph (e) of this section, as applicable, in 2010 and subsequent years.

(g)(1) Each SIP revision that contains control measures covering non-EGUs as part or all of a State's obligation in meeting its requirement under paragraph (a) of this section must demonstrate that such control measures are adequate to provide for the timely compliance with the State's Annual Non-EGU SO_2 Reduction Requirement under paragraph (e) of this section and are not adopted or implemented by the State, as of May 12, 2005, and are not adopted or implemented by the federal government, as of the date of submission of the SIP revision by the State to EPA.

(2) The demonstration under paragraph (g)(1) of this section must include the following, with respect to each source category of non-EGUs for which the SIP revision requires control measures:

(i) A detailed historical baseline inventory of SO_2 mass emissions from the source category in a representative year consisting, at the State's election, of 2002, 2003, 2004, or 2005, or an average of 2 or more of those years, absent the control measures specified in the SIP revision.

(A) This inventory must represent estimates of actual emissions based on monitoring data in accordance with part 75 of this chapter, if the source category is subject to part 75 monitoring requirements in accordance with part 75 of this chapter.

(B) In the absence of monitoring data in accordance with part 75 of this chapter, actual emissions must be quantified, to the maximum extent practicable, with the same degree of assurance with which emissions are quantified for sources subject to part 75 of this chapter and using source-specific or source-category-specific assumptions that ensure a source's or source category's actual emissions are not overestimated. If a State uses factors to estimate emissions, production or utilization, or effectiveness of controls or rules for a source category, such factors must be chosen to ensure that emissions are not overestimated.

(C) For measures to reduce emissions from motor vehicles, emission estimates must be based on an emissions model that has been approved by EPA for use in SIP development and must be consistent with the planning assumptions regarding vehicle miles traveled and other factors current at the time of the SIP development.

(D) For measures to reduce emissions from nonroad engines or vehicles, emission estimates methodologies must be approved by EPA.

(ii) A detailed baseline inventory of SO_2 mass emissions from the source category in the years 2010 and 2015, absent the control measures specified in the SIP revision and reflecting changes in these emissions from the historical baseline year to the years 2010 and 2015, based on projected changes in the production input or output, population, vehicle miles traveled, economic activity, or other factors as applicable to this source category.

(A) These inventories must account for implementation of any control measures that are adopted or implemented by the State, as of May 12, 2005, or adopted or implemented by the federal government, as of the date of submission of the SIP revision by the State to EPA, and must exclude any control measures specified in the SIP revision to meet the SO_2 emissions reduction requirements of this section.

(B) Economic and population forecasts must be as specific as possible to the applicable industry, State, and county of the source or source category

and must be consistent with both national projections and relevant official planning assumptions, including estimates of population and vehicle miles traveled developed through consultation between State and local transportation and air quality agencies. However, if these official planning assumptions are inconsistent with official U.S. Census projections of population or with energy consumption projections contained in the U.S. Department of Energy's most recent Annual Energy Outlook, then the SIP revision must make adjustments to correct the inconsistency or must demonstrate how the official planning assumptions are more accurate.

(C) These inventories must account for any changes in production method, materials, fuels, or efficiency that are expected to occur between the historical baseline year and 2010 or 2015, as appropriate.

(iii) A projection of SO_2 mass emissions in 2010 and 2015 from the source category assuming the same projected changes as under paragraph (g)(2)(ii) of this section and resulting from implementation of each of the control measures specified in the SIP revision.

(A) These inventories must address the possibility that the State's new control measures may cause production or utilization, and emissions, to shift to unregulated or less stringently regulated sources in the source category in the same or another State, and these inventories must include any such amounts of emissions that may shift to such other sources.

(B) The State must provide EPA with a summary of the computations, assumptions, and judgments used to determine the degree of reduction in projected 2010 and 2015 SO_2 emissions that will be achieved from the implementation of the new control measures compared to the relevant baseline emissions inventory.

(iv) The result of subtracting the amounts in paragraph (g)(2)(iii) of this section for 2010 and 2015, respectively, from the lower of the amounts in paragraph (g)(2)(i) or (g)(2)(ii) of this section for 2010 and 2015, respectively, may be credited towards the State's Annual Non-EGU SO_2 Reduction Requirement in paragraph (e)(3) of this section for the appropriate period.

(v) Each SIP revision must identify the sources of the data used in each estimate and each projection of emissions.

(h) Each SIP revision must comply with §51.116 (regarding data availability).

(i) Each SIP revision must provide for monitoring the status of compliance with any control measures adopted to meet the State's requirements under paragraph (e) of this section, as follows:

(1) The SIP revision must provide for legally enforceable procedures for requiring owners or operators of stationary sources to maintain records of, and periodically report to the State:

(i) Information on the amount of SO_2 emissions from the stationary sources; and

(ii) Other information as may be necessary to enable the State to determine whether the sources are in compliance with applicable portions of the control measures;

(2) The SIP revision must comply with §51.212 (regarding testing, inspection, enforcement, and complaints);

(3) If the SIP revision contains any transportation control measures, then the SIP revision must comply with §51.213 (regarding transportation control measures);

(4)(i) If the SIP revision contains measures to control EGUs, then the SIP revision must require such sources to comply with the monitoring, recordkeeping, and reporting provisions of part 75 of this chapter.

(ii) If the SIP revision contains measures to control fossil fuel-fired non-EGUs that are boilers or combustion turbines with a maximum design heat input greater than 250 mmBtu/hr, then the SIP revision must require such sources to comply with the monitoring, recordkeeping, and reporting provisions of part 75 of this chapter.

(iii) If the SIP revision contains measures to control any other non-EGUs that are not described in paragraph (i)(4)(ii) of this section, then the SIP revision must require such sources to comply with the monitoring, recordkeeping, and reporting provisions of part 75 of this chapter, or the State

must demonstrate why such requirements are not practicable and adopt alternative requirements that ensure that the required emissions reductions will be quantified, to the maximum extent practicable, with the same degree of assurance with which emissions are quantified for sources subject to part 75 of this chapter.

(j) Each SIP revision must show that the State has legal authority to carry out the SIP revision, including authority to:

(1) Adopt emissions standards and limitations and any other measures necessary for attainment and maintenance of the State's relevant Annual EGU SO_2 Budget or the Annual Non-EGU SO_2 Reduction Requirement, as applicable, under paragraph (e) of this section;

(2) Enforce applicable laws, regulations, and standards and seek injunctive relief;

(3) Obtain information necessary to determine whether air pollution sources are in compliance with applicable laws, regulations, and standards, including authority to require recordkeeping and to make inspections and conduct tests of air pollution sources; and

(4)(i) Require owners or operators of stationary sources to install, maintain, and use emissions monitoring devices and to make periodic reports to the State on the nature and amounts of emissions from such stationary sources; and

(ii) Make the data described in paragraph (j)(4)(i) of this section available to the public within a reasonable time after being reported and as correlated with any applicable emissions standards or limitations.

(k)(1) The provisions of law or regulation that the State determines provide the authorities required under this section must be specifically identified, and copies of such laws or regulations must be submitted with the SIP revision.

(2) Legal authority adequate to fulfill the requirements of paragraphs (j)(3) and (4) of this section may be delegated to the State under section 114 of the CAA.

(l)(1) A SIP revision may assign legal authority to local agencies in accordance with § 51.232.

(2) Each SIP revision must comply with § 51.240 (regarding general plan requirements).

(m) Each SIP revision must comply with § 51.280 (regarding resources).

(n) Each SIP revision must provide for State compliance with the reporting requirements in § 51.125.

(o)(1) Notwithstanding any other provision of this section, if a State adopts regulations substantively identical to subparts AAA through III of part 96 of this chapter (CAIR SO_2 Trading Program), incorporates such subparts by reference into its regulations, or adopts regulations that differ substantively from such subparts only as set forth in paragraph (o)(2) of this section, then such emissions trading program in the State's SIP revision is automatically approved as meeting the requirements of paragraph (e) of this section, provided that the State has the legal authority to take such action and to implement its responsibilities under such regulations. Before January 1, 2009, a State's regulations shall be considered to be substantively identical to subparts AAA through III of part 96 of the chapter, or differing substantively only as set forth in paragraph (o)(2) of this section, regardless of whether the State's regulations include the definition of ''Biomass'', paragraph (3) of the definition of ''Cogeneration unit'', and the second sentence of the definition of ''Total energy input'' in § 96.202 of this chapter promulgated on October 19, 2007, provided that the State timely submits to the Administrator a SIP revision that revises the State's regulations to include such provisions. Submission to the Administrator of a SIP revision that revises the State's regulations to include such provisions shall be considered timely if the submission is made by January 1, 2009.

(2) If a State adopts an emissions trading program that differs substantively from subparts AAA through III of part 96 of this chapter only as follows, then the emissions trading program is approved as set forth in paragraph (o)(1) of this section.

(i) The State may decline to adopt the CAIR SO_2 opt-in provisions of subpart III of this part and the provisions applicable only to CAIR SO_2 opt-in units in subparts AAA through HHH of this part.

(ii) The State may decline to adopt the CAIR SO_2 opt-in provisions of §96.288(b) of this chapter and the provisions of subpart III of this part applicable only to CAIR SO_2 opt-in units under §96.288(b).

(iii) The State may decline to adopt the CAIR SO_2 opt-in provisions of §96.288(c) of this chapter and the provisions of subpart II of this part applicable only to CAIR SO_2 opt-in units under §96.288(c).

(3) A State that adopts an emissions trading program in accordance with paragraph (o)(1) or (2) of this section is not required to adopt an emissions trading program in accordance with §96.123 (o)(1) or (2) or (aa)(1) or (2) of this chapter.

(4) If a State adopts an emissions trading program that differs substantively from subparts AAA through III of part 96 of this chapter, other than as set forth in paragraph (o)(2) of this section, then such emissions trading program is not automatically approved as set forth in paragraph (o)(1) or (2) of this section and will be reviewed by the Administrator for approvability in accordance with the other provisions of this section, provided that the SO_2 allowances issued under such emissions trading program shall not, and the SIP revision shall state that such SO_2 allowances shall not, qualify as CAIR SO_2 allowances under any emissions trading program approved under paragraph (o)(1) or (2) of this section.

(p) If a State's SIP revision does not contain an emissions trading program approved under paragraph (o)(1) or (2) of this section but contains control measures on EGUs as part or all of a State's obligation in meeting its requirement under paragraph (a) of this section:

(1) The SIP revision shall provide, for each year that the State has such obligation, for the permanent retirement of an amount of Acid Rain allowances allocated to sources in the State for that year and not deducted by the Administrator under the Acid Rain Program and any emissions trading program approved under paragraph (o)(1) or (2) of this section, equal to the difference between—

(A) The total amount of Acid Rain allowances allocated under the Acid Rain Program to the sources in the State for that year; and

(B) If the State's SIP revision contains only control measures on EGUs, the State's Annual EGU SO_2 Budget for the appropriate period as specified in paragraph (e)(2) of this section or, if the State's SIP revision contains control measures on EGUs and non-EGUs, the State's Annual EGU SO_2 Budget for the appropriate period as specified in the SIP revision.

(2) The SIP revision providing for permanent retirement of Acid Rain allowances under paragraph (p)(1) of this section must ensure that such allowances are not available for deduction by the Administrator under the Acid Rain Program and any emissions trading program approved under paragraph (o)(1) or (2) of this section.

(q) The terms used in this section shall have the following meanings:

Acid Rain allowance means a limited authorization issued by the Administrator under the Acid Rain Program to emit up to one ton of sulfur dioxide during the specified year or any year thereafter, except as otherwise provided by the Administrator.

Acid Rain Program means a multi-State sulfur dioxide and nitrogen oxides air pollution control and emissions reduction program established by the Administrator under title IV of the CAA and parts 72 through 78 of this chapter.

Administrator means the Administrator of the United States Environmental Protection Agency or the Administrator's duly authorized representative.

Allocate or *allocation* means, with regard to allowances, the determination of the amount of allowances to be initially credited to a source or other entity.

Biomass means—

(1) Any organic material grown for the purpose of being converted to energy;

(2) Any organic byproduct of agriculture that can be converted into energy; or

(3) Any material that can be converted into energy and is nonmerchantable for other purposes, that is segregated from other nonmerchantable material, and that is;

(i) A forest-related organic resource, including mill residues, precommercial thinnings, slash, brush, or byproduct from conversion of trees to merchantable material; or

(ii) A wood material, including pallets, crates, dunnage, manufacturing and construction materials (other than pressure-treated, chemically-treated, or painted wood products), and landscape or right-of-way tree trimmings.

Boiler means an enclosed fossil- or other-fuel-fired combustion device used to produce heat and to transfer heat to recirculating water, steam, or other medium.

Bottoming-cycle cogeneration unit means a cogeneration unit in which the energy input to the unit is first used to produce useful thermal energy and at least some of the reject heat from the useful thermal energy application or process is then used for electricity production.

Clean Air Act or *CAA* means the Clean Air Act, 42 U.S.C. 7401, *et seq*.

Cogeneration unit means a stationary, fossil-fuel-fired boiler or stationary, fossil-fuel-fired combustion turbine:

(1) Having equipment used to produce electricity and useful thermal energy for industrial, commercial, heating, or cooling purposes through the sequential use of energy; and

(2) Producing during the 12-month period starting on the date the unit first produces electricity and during any calendar year after the calendar year in which the unit first produces electricity—

(i) For a topping-cycle cogeneration unit,

(A) Useful thermal energy not less than 5 percent of total energy output; and

(B) Useful power that, when added to one-half of useful thermal energy produced, is not less then 42.5 percent of total energy input, if useful thermal energy produced is 15 percent or more of total energy output, or not less than 45 percent of total energy input, if useful thermal energy produced is less than 15 percent of total energy output.

(ii) For a bottoming-cycle cogeneration unit, useful power not less than 45 percent of total energy input;

(3) Provided that the total energy input under paragraphs (2)(i)(B) and (2)(ii) of this definition shall equal the unit's total energy input from all fuel except biomass if the unit is a boiler.

Combustion turbine means:

(1) An enclosed device comprising a compressor, a combustor, and a turbine and in which the flue gas resulting from the combustion of fuel in the combustor passes through the turbine, rotating the turbine; and

(2) If the enclosed device under paragraph (1) of this definition is combined cycle, any associated duct burner, heat recovery steam generator, and steam turbine.

Commence operation means to have begun any mechanical, chemical, or electronic process, including, with regard to a unit, start-up of a unit's combustion chamber.

Electric generating unit or *EGU* means:

(1)(i) Except as provided in paragraph (2) of this definition, a stationary, fossil-fuel-fired boiler or stationary, fossil-fuel-fired combustion turbine serving at any time, since the later of November 15, 1990 or the start-up of the unit's combustion chamber, a generator with nameplate capacity of more than 25 MWe producing electricity for sale.

(ii) If a stationary boiler or stationary combustion turbine that, under paragraph (1)(i) of this section, is not an electric generating unit begins to combust fossil fuel or to serve a generator with nameplate capacity of more than 25 MWe producing electricity for sale, the unit shall become an electric generating unit as provided in paragraph (1)(i) of this section on the first date on which it both combusts fossil fuel and serves such generator.

(2) A unit that meets the requirements set forth in paragraphs (2)(i)(A), (2)(ii)(A), or (2)(ii)(B) of this definition paragraph shall not be an electric generating unit:

(i)(A) Any unit that is an electric generating unit under paragraph (1)(i) or (ii) of this definition:

(*1*) Qualifying as a cogeneration unit during the 12-month period starting on the date the unit first produces electricity and continuing to qualify as a cogeneration unit; and

(*2*) Not serving at any time, since the later of November 15, 1990 or the start-up of the unit's combustion chamber, a generator with nameplate capacity of more than 25 MWe supplying in any calendar year more than one-third of the unit's potential electric output capacity or 219,000 MWh, whichever is greater, to any utility power distribution system for sale.

(B) If a unit qualifies as a cogeneration unit during the 12-month period starting on the date the unit first produces electricity and meets the requirements of paragraphs (2)(i)(A) of this section for at least one calendar year, but subsequently no longer meets all such requirements, the unit shall become an electric generating unit starting on the earlier of January 1 after the first calendar year during which the unit first no longer qualifies as a cogeneration unit or January 1 after the first calendar year during which the unit no longer meets the requirements of paragraph (2)(i)(A)(*2*) of this section.

(ii)(A) Any unit that is an electric generating unit under paragraph (1)(i) or (ii) of this definition commencing operation before January 1, 1985:

(*1*) Qualifying as a solid waste incineration unit; and

(*2*) With an average annual fuel consumption of non-fossil fuel for 1985–1987 exceeding 80 percent (on a Btu basis) and an average annual fuel consumption of non-fossil fuel for any 3 consecutive calendar years after 1990 exceeding 80 percent (on a Btu basis).

(B) Any unit that is an electric generating unit under paragraph (1)(i) or (ii) of this definition commencing operation on or after January 1, 1985:

(*1*) Qualifying as a solid waste incineration unit; and

(*2*) With an average annual fuel consumption of non-fossil fuel for the first 3 calendar years of operation exceeding 80 percent (on a Btu basis) and an average annual fuel consumption of non-fossil fuel for any 3 consecutive calendar years after 1990 exceeding 80 percent (on a Btu basis).

(C) If a unit qualifies as a solid waste incineration unit and meets the requirements of paragraph (2)(ii)(A) or (B) of this section for at least 3 consecutive calendar years, but subsequently no longer meets all such requirements, the unit shall become an electric generating unit starting on the earlier of January 1 after the first calendar year during which the unit first no longer qualifies as a solid waste incineration unit or January 1 after the first 3 consecutive calendar years after 1990 for which the unit has an average annual fuel consumption of fossil fuel of 20 percent or more.

Fossil fuel means natural gas, petroleum, coal, or any form of solid, liquid, or gaseous fuel derived from such material.

Fossil-fuel-fired means, with regard to a unit, combusting any amount of fossil fuel in any calendar year.

Generator means a device that produces electricity.

Maximum design heat input means the maximum amount of fuel per hour (in Btu/hr) that a unit is capable of combusting on a steady state basis as of the initial installation of the unit as specified by the manufacturer of the unit.

NAAQS means National Ambient Air Quality Standard.

Nameplate capacity means, starting from the initial installation of a generator, the maximum electrical generating output (in MWe) that the generator is capable of producing on a steady state basis and during continuous operation (when not restricted by seasonal or other deratings as of such installation as specified by the manufacturer of the generator or, starting from the completion of any subsequent physical change in the generator resulting in an increase in the maximum electrical generating output (in MWe) that the generator is capable of producing on a steady state basis and during continuous operation (when not restricted by seasonal or other deratings), such increased maximum amount as of such completion as specified by the person conducting the physical change.

Non-EGU means a source of SO_2 emissions that is not an EGU.

Potential electrical output capacity means 33 percent of a unit's maximum design heat input, divided by 3,413 Btu/kWh, divided by 1,000 kWh/MWh, and multiplied by 8,760 hr/yr.

Sequential use of energy means:

(1) For a topping-cycle cogeneration unit, the use of reject heat from electricity production in a useful thermal energy application or process; or

(2) For a bottoming-cycle cogeneration unit, the use of reject heat from useful thermal energy application or process in electricity production.

Solid waste incineration unit means a stationary, fossil-fuel-fired boiler or stationary, fossil-fuel-fired combustion turbine that is a ''solid waste incineration unit'' as defined in section 129(g)(1) of the Clean Air Act.

Topping-cycle cogeneration unit means a cogeneration unit in which the energy input to the unit is first used to produce useful power, including electricity, and at least some of the reject heat from the electricity production is then used to provide useful thermal energy.

Total energy input means, with regard to a cogeneration unit, total energy of all forms supplied to the cogeneration unit, excluding energy produced by the cogeneration unit itself.

Total energy output means, with regard to a cogeneration unit, the sum of useful power and useful thermal energy produced by the cogeneration unit. Each form of energy supplied shall be measured by the lower heating value of that form of energy calculated as follows:

$$LHV = HHV - 10.55(W + 9H)$$

Where:

LHV = lower heating value of fuel in Btu/lb,
HHV = higher heating value of fuel in Btu/lb,
W = Weight % of moisture in fuel, and
H = Weight % of hydrogen in fuel.

Unit means a stationary, fossil-fuel-fired boiler or a stationary, fossil-fuel fired combustion turbine.

Useful power means, with regard to a cogeneration unit, electricity or mechanical energy made available for use, excluding any such energy used in the power production process (which process includes, but is not limited to, any on-site processing or treatment of fuel combusted at the unit and any on-site emission controls).

Useful thermal energy means, with regard to a cogeneration unit, thermal energy that is:

(1) Made available to an industrial or commercial process, excluding any heat contained in condensate return or makeup water;

(2) Used in a heating application (e.g., space heating or domestic hot water heating); or

(3) Used in a space cooling application (*i.e.*, thermal energy used by an absorption chiller).

Utility power distribution system means the portion of an electricity grid owned or operated by a utility and dedicated to delivering electricity to customers.

(r) Notwithstanding any other provision of this section, a State may adopt, and include in a SIP revision submitted by March 31, 2007, regulations relating to the Federal CAIR SO_2 Trading Program under subparts AAA through HHH of part 97 of this chapter as follows. The State may adopt the following CAIR opt-in unit provisions:

(1) Provisions for CAIR opt-in units, including provisions for applications for CAIR opt-in permits, approval of CAIR opt-in permits, treatment of units as CAIR opt-in units, and allocation and recordation of CAIR SO_2 allowances for CAIR opt-in units, that are substantively identical to subpart III of part 96 of this chapter and the provisions of subparts AAA through HHH that are applicable to CAIR opt-in units or units for which a CAIR opt-in permit application is submitted and not withdrawn and a CAIR opt-in permit is not yet issued or denied;

(2) Provisions for CAIR opt-in units, including provisions for applications for CAIR opt-in permits, approval of CAIR opt-in permits, treatment of units as CAIR opt-in units, and allocation and recordation of CAIR SO_2 allowances for CAIR opt-in units, that are substantively identical to subpart III of part 96 of this chapter and the provisions of subparts AAA through HHH that are applicable to CAIR opt-in units or units for which a CAIR opt-in permit application is submitted and not withdrawn and a CAIR opt-in permit is not yet issued or denied, except that the provisions exclude § 96.288(b) of

this chapter and the provisions of subpart III of part 96 of this chapter that apply only to units covered by § 96.288(b) of this chapter; or

(3) Provisions for applications for CAIR opt-in units, including provisions for CAIR opt-in permits, approval of CAIR opt-in permits, treatment of units as CAIR opt-in units, and allocation and recordation of CAIR SO_2 allowances for CAIR opt-in units, that are substantively identical to subpart III of part 96 of this chapter and the provisions of subparts AAA through HHH that are applicable to CAIR opt-in units or units for which a CAIR opt-in permit application is submitted and not withdrawn and a CAIR opt-in permit is not yet issued or denied, except that the provisions exclude § 96.288(c) of this chapter and the provisions of subpart III of part 96 of this chapter that apply only to units covered by § 96.288(c) of this chapter.

(s) Notwithstanding any provisions of paragraphs (a) through (r) of this section, subparts AAA through III of part 96 of this chapter, subparts AAA through III of part 97 of this chapter, and any State's SIP to the contrary:

(1) With regard to any control period that begins after December 31, 2011, the Administrator:

(i) Rescinds the determination in paragraph (a) of this section that the States identified in paragraph (c) of this section must submit a SIP revision with respect to the fine particles ($PM_{2.5}$) NAAQS meeting the requirements of paragraphs (b) through (r) of this section; and

(ii) Will not carry out any of the functions set forth for the Administrator in subparts AAA through III of part 96 of this chapter, subparts AAA through III of part 97 of this chapter, or in any emissions trading program in a State's SIP approved under this section; and

(2) The Administrator will not deduct for excess emissions any CAIR SO_2 allowances allocated for 2012 or any year thereafter.

[70 FR 25328, May 12, 2005, as amended at 71 FR 25302, 25372, Apr. 28, 2006; 71 FR 74793, Dec. 13, 2006; 72 FR 59204, Oct. 19, 2007; 74 FR 56726, Nov. 3, 2009; 76 FR 48353, Aug. 8, 2011]

§ 51.125 [Reserved]

§ 51.126 Determination of widespread use of ORVR and waiver of CAA section 182(b)(3) Stage II gasoline vapor recovery requirements.

(a) Pursuant to section 202(a)(6) of the Clean Air Act, the Administrator has determined that, effective May 16, 2012, onboard refueling vapor recovery (ORVR) systems are in widespread use in the motor vehicle fleet within the United States.

(b) Effective May 16, 2012, the Administrator waives the requirement of Clean Air Act section 182(b)(3) for Stage II vapor recovery systems in ozone nonattainment areas regardless of classification. States must submit and receive EPA approval of a revision to their approved State Implementation Plans before removing Stage II requirements that are contained therein.

[77 FR 28782, May 16, 2012]

Subpart H—Prevention of Air Pollution Emergency Episodes

SOURCE: 51 FR 40668, Nov. 7, 1986, unless otherwise noted.

§ 51.150 Classification of regions for episode plans.

(a) This section continues the classification system for episode plans. Each region is classified separately with respect to each of the following pollutants: Sulfur oxides, particulate matter, carbon monoxide, nitrogen dioxide, and ozone.

(b) *Priority I Regions* means any area with greater ambient concentrations than the following:

(1) Sulfur dioxide—100 $\mu g/m^3$ (0.04 ppm) annual arithmetic mean; 455 $\mu g/m^3$ (0.17 ppm) 24-hour maximum.

(2) Particulate matter—95 $\mu g/m^3$ annual geometric mean; 325 $\mu g/m^3$ 24-hour maximum.

(3) Carbon monoxide—55 mg/m^3 (48 ppm) 1-hour maximum; 14 mg/m^3 (12 ppm) 8-hour maximum.

(4) Nitrogen dioxide—100 $\mu g/m^3$ (0.06 ppm) annual arithmetic mean.

(5) Ozone—195 $\mu g/m^3$ (0.10 ppm) 1-hour maximum.

(c) *Priority IA Region* means any area which is Priority I primarily because of emissions from a single point source.

(d) *Priority II Region* means any area which is not a Priority I region and has ambient concentrations between the following:

(1) Sulfur Dioxides—60–100 μg/m³ (0.02–0.04 ppm) annual arithmetic mean; 260–445 μg/m³ (0.10–0.17 ppm) 24-hour maximum; any concentration above 1,300 μg/m³ (0.50 ppm) three-hour average.

(2) Particulate matter—60–95 μg/m³ annual geometric mean; 150–325 μg/m³ 24-hour maximum.

(e) In the absence of adequate monitoring data, appropriate models must be used to classify an area under paragraph (b) of this section, consistent with the requirements contained in § 51.112(a).

(f) Areas which do not meet the above criteria are classified Priority III.

[51 FR 40668, Nov. 7, 1986, as amended at 58 FR 38822, July 20, 1993]

§ 51.151 Significant harm levels.

Each plan for a Priority I region must include a contingency plan which must, as a mimimum, provide for taking action necessary to prevent ambient pollutant concentrations at any location in such region from reaching the following levels:

Sulfur dioxide—2.620 μg/m³ (1.0 ppm) 24-hour average.

PM_{10}—600 micrograms/cubic meter; 24-hour average.

Carbon monoxide—57.5 mg/m³ (50 ppm) 8-hour average; 86.3 mg/m³ (75 ppm) 4-hour average; 144 mg/m³ (125 ppm) 1-hour average.

Ozone—1,200 ug/m³ (0.6 ppm) 2-hour average.

Nitrogen dioxide—3.750 ug/m³ (2.0 ppm) 1-hour average; 938 ug/m³ (0.5 ppm) 24-hour average.

[51 FR 40668, Nov. 7, 1986, as amended at 52 FR 24713, July 1, 1987]

§ 51.152 Contingency plans.

(a) Each contingency plan must—

(1) Specify two or more stages of episode criteria such as those set forth in appendix L to this part, or their equivalent;

(2) Provide for public announcement whenever any episode stage has been determined to exist; and

(3) Specify adequate emission control actions to be taken at each episode stage. (Examples of emission control actions are set forth in appendix L.)

(b) Each contingency plan for a Priority I region must provide for the following:

(1) Prompt acquisition of forecasts of atmospheric stagnation conditions and of updates of such forecasts as frequently as they are issued by the National Weather Service.

(2) Inspection of sources to ascertain compliance with applicable emission control action requirements.

(3) Communications procedures for transmitting status reports and orders as to emission control actions to be taken during an episode stage, including procedures for contact with public officials, major emission sources, public health, safety, and emergency agencies and news media.

(c) Each plan for a Priority IA and II region must include a contingency plan that meets, as a minimum, the requirements of paragraphs (b)(1) and (b)(2) of this section. Areas classified Priority III do not need to develop episode plans.

(d) Notwithstanding the requirements of paragraphs (b) and (c) of this section, the Administrator may, at his discretion—

(1) Exempt from the requirements of this section those portions of Priority I, IA, or II regions which have been designated as attainment or unclassifiable for national primary and secondary standards under section 107 of the Act; or

(2) Limit the requirements pertaining to emission control actions in Priority I regions to—

(i) Urbanized areas as identified in the most recent United States Census, and

(ii) Major emitting facilities, as defined by section 169(1) of the Act, outside the urbanized areas.

§ 51.153 Reevaluation of episode plans.

(a) States should periodically reevaluate priority classifications of all Regions or portion of Regions within their borders. The reevaluation must consider the three most recent years of air quality data. If the evaluation indicates a change to a higher priority

classification, appropriate changes in the episode plan must be made as expeditiously as practicable.

(b) [Reserved]

Subpart I—Review of New Sources and Modifications

SOURCE: 51 FR 40669, Nov. 7, 1986, unless otherwise noted.

§51.160 Legally enforceable procedures.

(a) Each plan must set forth legally enforceable procedures that enable the State or local agency to determine whether the construction or modification of a facility, building, structure or installation, or combination of these will result in—

(1) A violation of applicable portions of the control strategy; or

(2) Interference with attainment or maintenance of a national standard in the State in which the proposed source (or modification) is located or in a neighboring State.

(b) Such procedures must include means by which the State or local agency responsible for final decision-making on an application for approval to construct or modify will prevent such construction or modification if—

(1) It will result in a violation of applicable portions of the control strategy; or

(2) It will interfere with the attainment or maintenance of a national standard.

(c) The procedures must provide for the submission, by the owner or operator of the building, facility, structure, or installation to be constructed or modified, of such information on—

(1) The nature and amounts of emissions to be emitted by it or emitted by associated mobile sources;

(2) The location, design, construction, and operation of such facility, building, structure, or installation as may be necessary to permit the State or local agency to make the determination referred to in paragraph (a) of this section.

(d) The procedures must provide that approval of any construction or modification must not affect the responsibility to the owner or operator to comply with applicable portions of the control strategy.

(e) The procedures must identify types and sizes of facilities, buildings, structures, or installations which will be subject to review under this section. The plan must discuss the basis for determining which facilities will be subject to review.

(f) The procedures must discuss the air quality data and the dispersion or other air quality modeling used to meet the requirements of this subpart.

(1) All applications of air quality modeling involved in this subpart shall be based on the applicable models, data bases, and other requirements specified in appendix W of this part (Guideline on Air Quality Models).

(2) Where an air quality model specified in appendix W of this part (Guideline on Air Quality Models) is inappropriate, the model may be modified or another model substituted. Such a modification or substitution of a model may be made on a case-by-case basis or, where appropriate, on a generic basis for a specific State program. Written approval of the Administrator must be obtained for any modification or substitution. In addition, use of a modified or substituted model must be subject to notice and opportunity for public comment under procedures set forth in §51.102.

[51 FR 40669, Nov. 7, 1986, as amended at 58 FR 38822, July 20, 1993; 60 FR 40468, Aug. 9, 1995; 61 FR 41840, Aug. 12, 1996]

§51.161 Public availability of information.

(a) The legally enforceable procedures in §51.160 must also require the State or local agency to provide opportunity for public comment on information submitted by owners and operators. The public information must include the agency's analysis of the effect of construction or modification on ambient air quality, including the agency's proposed approval or disapproval.

(b) For purposes of paragraph (a) of this section, opportunity for public comment shall include, as a minimum—

(1) Availability for public inspection in at least one location in the area affected of the information submitted by

the owner or operator and of the State or local agency's analysis of the effect on air quality;

(2) A 30-day period for submittal of public comment; and

(3) A notice by prominent advertisement in the area affected of the location of the source information and analysis specified in paragraph (b)(1) of this section.

(c) Where the 30-day comment period required in paragraph (b) of this section would conflict with existing requirements for acting on requests for permission to construct or modify, the State may submit for approval a comment period which is consistent with such existing requirements.

(d) A copy of the notice required by paragraph (b) of this section must also be sent to the Administrator through the appropriate Regional Office, and to all other State and local air pollution control agencies having jurisdiction in the region in which such new or modified installation will be located. The notice also must be sent to any other agency in the region having responsibility for implementing the procedures required under this subpart. For lead, a copy of the notice is required for all point sources. The definition of point for lead is given in § 51.100(k)(2).

§ 51.162 Identification of responsible agency.

Each plan must identify the State or local agency which will be responsible for meeting the requirements of this subpart in each area of the State. Where such responsibility rests with an agency other than an air pollution control agency, such agency will consult with the appropriate State or local air pollution control agency in carrying out the provisions of this subpart.

§ 51.163 Administrative procedures.

The plan must include the administrative procedures, which will be followed in making the determination specified in paragraph (a) of § 51.160.

§ 51.164 Stack height procedures.

Such procedures must provide that the degree of emission limitation required of any source for control of any air pollutant must not be affected by so much of any source's stack height that exceeds good engineering practice or by any other dispersion technique, except as provided in § 51.118(b). Such procedures must provide that before a State issues a permit to a source based on a good engineering practice stack height that exceeds the height allowed by § 51.100(ii) (1) or (2), the State must notify the public of the availability of the demonstration study and must provide opportunity for public hearing on it. This section does not require such procedures to restrict in any manner the actual stack height of any source.

§ 51.165 Permit requirements.

(a) State Implementation Plan and Tribal Implementation Plan provisions satisfying sections 172(c)(5) and 173 of the Act shall meet the following conditions:

(1) All such plans shall use the specific definitions. Deviations from the following wording will be approved only if the State specifically demonstrates that the submitted definition is more stringent, or at least as stringent, in all respects as the corresponding definition below:

(i) *Stationary source* means any building, structure, facility, or installation which emits or may emit a regulated NSR pollutant.

(ii) *Building, structure, facility, or installation* means all of the pollutant-emitting activities which belong to the same industrial grouping, are located on one or more contiguous or adjacent properties, and are under the control of the same person (or persons under common control) except the activities of any vessel. Pollutant-emitting activities shall be considered as part of the same industrial grouping if they belong to the same *Major Group* (*i.e.*, which have the same two-digit code) as described in the *Standard Industrial Classification Manual, 1972,* as amended by the 1977 Supplement (U.S. Government Printing Office stock numbers 4101–0065 and 003–005–00176–0, respectively).

(iii) *Potential to emit* means the maximum capacity of a stationary source to emit a pollutant under its physical and operational design. Any physical or operational limitation on the capacity of the source to emit a pollutant,

including air pollution control equipment and restrictions on hours of operation or on the type or amount of material combusted, stored, or processed, shall be treated as part of its design only if the limitation or the effect it would have on emissions is federally enforceable. Secondary emissions do not count in determining the potential to emit of a stationary source.

(iv)(A) *Major stationary source* means:

(*1*) Any stationary source of air pollutants that emits, or has the potential to emit, 100 tons per year or more of any regulated NSR pollutant, except that lower emissions thresholds shall apply in areas subject to subpart 2, subpart 3, or subpart 4 of part D, title I of the Act, according to paragraphs (a)(1)(iv)(A)(*1*)(*i*) through (*vi*) of this section.

(*i*) 50 tons per year of volatile organic compounds in any serious ozone nonattainment area.

(*ii*) 50 tons per year of volatile organic compounds in an area within an ozone transport region, except for any severe or extreme ozone nonattainment area.

(*iii*) 25 tons per year of volatile organic compounds in any severe ozone nonattainment area.

(*iv*) 10 tons per year of volatile organic compounds in any extreme ozone nonattainment area.

(*v*) 50 tons per year of carbon monoxide in any serious nonattainment area for carbon monoxide, where stationary sources contribute significantly to carbon monoxide levels in the area (as determined under rules issued by the Administrator).

(*vi*) 70 tons per year of PM–10 in any serious nonattainment area for PM–10;

(*2*) For the purposes of applying the requirements of paragraph (a)(8) of this section to stationary sources of nitrogen oxides located in an ozone nonattainment area or in an ozone transport region, any stationary source which emits, or has the potential to emit, 100 tons per year or more of nitrogen oxides emissions, except that the emission thresholds in paragraphs (a)(1)(iv)(A)(*2*)(*i*) through (*vi*) of this section shall apply in areas subject to subpart 2 of part D, title I of the Act.

(*i*) 100 tons per year or more of nitrogen oxides in any ozone nonattainment area classified as marginal or moderate.

(*ii*) 100 tons per year or more of nitrogen oxides in any ozone nonattainment area classified as a transitional, submarginal, or incomplete or no data area, when such area is located in an ozone transport region.

(*iii*) 100 tons per year or more of nitrogen oxides in any area designated under section 107(d) of the Act as attainment or unclassifiable for ozone that is located in an ozone transport region.

(*iv*) 50 tons per year or more of nitrogen oxides in any serious nonattainment area for ozone.

(*v*) 25 tons per year or more of nitrogen oxides in any severe nonattainment area for ozone.

(*vi*) 10 tons per year or more of nitrogen oxides in any extreme nonattainment area for ozone; or

(*3*) Any physical change that would occur at a stationary source not qualifying under paragraphs (a)(1)(iv)(A)(*1*) or (*2*) of this section as a major stationary source, if the change would constitute a major stationary source by itself.

(B) A major stationary source that is major for volatile organic compounds shall be considered major for ozone

(C) The fugitive emissions of a stationary source shall not be included in determining for any of the purposes of this paragraph whether it is a major stationary source, unless the source belongs to one of the following categories of stationary sources:

(*1*) Coal cleaning plants (with thermal dryers);

(*2*) Kraft pulp mills;

(*3*) Portland cement plants;

(*4*) Primary zinc smelters;

(*5*) Iron and steel mills;

(*6*) Primary aluminum ore reduction plants;

(*7*) Primary copper smelters;

(*8*) Municipal incinerators capable of charging more than 250 tons of refuse per day;

(*9*) Hydrofluoric, sulfuric, or nitric acid plants;

(*10*) Petroleum refineries;

(*11*) Lime plants;

(*12*) Phosphate rock processing plants;

(*13*) Coke oven batteries;

(*14*) Sulfur recovery plants;

(*15*) Carbon black plants (furnace process);

(*16*) Primary lead smelters;

(*17*) Fuel conversion plants;

(*18*) Sintering plants;

(*19*) Secondary metal production plants;

(*20*) Chemical process plants—The term chemical processing plant shall not include ethanol production facilities that produce ethanol by natural fermentation included in NAICS codes 325193 or 312140;

(*21*) Fossil-fuel boilers (or combination thereof) totaling more than 250 million British thermal units per hour heat input;

(*22*) Petroleum storage and transfer units with a total storage capacity exceeding 300,000 barrels;

(*23*) Taconite ore processing plants;

(*24*) Glass fiber processing plants;

(*25*) Charcoal production plants;

(*26*) Fossil fuel-fired steam electric plants of more than 250 million British thermal units per hour heat input; and

(*27*) Any other stationary source category which, as of August 7, 1980, is being regulated under section 111 or 112 of the Act.

(v)(A) *Major modification* means any physical change in or change in the method of operation of a major stationary source that would result in:

(*1*) A significant emissions increase of a regulated NSR pollutant (as defined in paragraph (a)(1)(xxxvii) of this section); and

(*2*) A significant net emissions increase of that pollutant from the major stationary source.

(B) Any significant emissions increase (as defined in paragraph (a)(1)(xxvii) of this section) from any emissions units or net emissions increase (as defined in paragraph (a)(1)(vi) of this section) at a major stationary source that is significant for volatile organic compounds shall be considered significant for ozone.

(C) A physical change or change in the method of operation shall not include:

(*1*) Routine maintenance, repair and replacement. Routine maintenance, repair and replacement shall include, but not be limited to, any activity(s) that meets the requirements of the equipment replacement provisions contained in paragraph (h) of this section;

NOTE TO PARAGRAPH (a)(1)(v)(C)(*1*): On December 24, 2003, the second sentence of this paragraph (a)(1)(v)(C)(*1*) is stayed indefinitely by court order. The stayed provisions will become effective immediately if the court terminates the stay. At that time, EPA will publish a document in the FEDERAL REGISTER advising the public of the termination of the stay.

(*2*) Use of an alternative fuel or raw material by reason of an order under sections 2 (a) and (b) of the Energy Supply and Environmental Coordination Act of 1974 (or any superseding legislation) or by reason of a natural gas curtailment plan pursuant to the Federal Power Act;

(*3*) Use of an alternative fuel by reason of an order or rule section 125 of the Act;

(*4*) Use of an alternative fuel at a steam generating unit to the extent that the fuel is generated from municipal solid waste;

(*5*) Use of an alternative fuel or raw material by a stationary source which;

(*i*) The source was capable of accommodating before December 21, 1976, unless such change would be prohibited under any federally enforceable permit condition which was established after December 12, 1976 pursuant to 40 CFR 52.21 or under regulations approved pursuant to 40 CFR subpart I or § 51.166, or

(*ii*) The source is approved to use under any permit issued under regulations approved pursuant to this section;

(*6*) An increase in the hours of operation or in the production rate, unless such change is prohibited under any federally enforceable permit condition which was established after December 21, 1976 pursuant to 40 CFR 52.21 or regulations approved pursuant to 40 CFR part 51 subpart I or 40 CFR 51.166.

(*7*) Any change in ownership at a stationary source.

(*8*) [Reserved]

(*9*) The installation, operation, cessation, or removal of a temporary clean coal technology demonstration project, provided that the project complies with:

(*i*) The State Implementation Plan for the State in which the project is located, and

(*ii*) Other requirements necessary to attain and maintain the national ambient air quality standard during the project and after it is terminated.

(D) This definition shall not apply with respect to a particular regulated NSR pollutant when the major stationary source is complying with the requirements under paragraph (f) of this section for a PAL for that pollutant. Instead, the definition at paragraph (f)(2)(viii) of this section shall apply.

(E) For the purpose of applying the requirements of (a)(8) of this section to modifications at major stationary sources of nitrogen oxides located in ozone nonattainment areas or in ozone transport regions, whether or not subject to subpart 2, part D, title I of the Act, any significant net emissions increase of nitrogen oxides is considered significant for ozone.

(F) Any physical change in, or change in the method of operation of, a major stationary source of volatile organic compounds that results in any increase in emissions of volatile organic compounds from any discrete operation, emissions unit, or other pollutant emitting activity at the source shall be considered a significant net emissions increase and a major modification for ozone, if the major stationary source is located in an extreme ozone nonattainment area that is subject to subpart 2, part D, title I of the Act.

(G) Fugitive emissions shall not be included in determining for any of the purposes of this section whether a physical change in or change in the method of operation of a major stationary source is a major modification, unless the source belongs to one of the source categories listed in paragraph (a)(1)(iv)(C) of this section.

(vi)(A) *Net emissions increase* means, with respect to any regulated NSR pollutant emitted by a major stationary source, the amount by which the sum of the following exceeds zero:

(*1*) The increase in emissions from a particular physical change or change in the method of operation at a stationary source as calculated pursuant to paragraph (a)(2)(ii) of this section; and

(*2*) Any other increases and decreases in actual emissions at the major stationary source that are contemporaneous with the particular change and are otherwise creditable. Baseline actual emissions for calculating increases and decreases under this paragraph (a)(1)(vi)(A)(*2*) shall be determined as provided in paragraph (a)(1)(xxxv) of this section, except that paragraphs (a)(1)(xxxv)(A)(*3*) and (a)(1)(xxxv)(B)(*4*) of this section shall not apply.

(B) An increase or decrease in actual emissions is contemporaneous with the increase from the particular change only if it occurs before the date that the increase from the particular change occurs;

(C) An increase or decrease in actual emissions is creditable only if:

(*1*) It occurs within a reasonable period to be specified by the reviewing authority; and

(*2*) The reviewing authority has not relied on it in issuing a permit for the source under regulations approved pursuant to this section, which permit is in effect when the increase in actual emissions from the particular change occurs; and

(*3*) As it pertains to an increase or decrease in fugitive emissions (to the extent quantifiable), it occurs at an emissions unit that is part of one of the source categories listed in paragraph (a)(1)(iv)(C) of this section or it occurs at an emissions unit that is located at a major stationary source that belongs to one of the listed source categories. Fugitive emission increases or decreases are not creditable for those emissions units located at a facility whose primary activity is not represented by one of the source categories listed in paragraph (a)(1)(iv)(C) of this section and that are not, by themselves, part of a listed source category.

(D) An increase in actual emissions is creditable only to the extent that the new level of actual emissions exceeds the old level.

(E) A decrease in actual emissions is creditable only to the extent that:

(*1*) The old level of actual emission or the old level of allowable emissions

whichever is lower, exceeds the new level of actual emissions;

(*2*) It is enforceable as a practical matter at and after the time that actual construction on the particular change begins; and

(*3*) The reviewing authority has not relied on it in issuing any permit under regulations approved pursuant to 40 CFR part 51 subpart I or the State has not relied on it in demonstrating attainment or reasonable further progress;

(*4*) It has approximately the same qualitative significance for public health and welfare as that attributed to the increase from the particular change; and

(F) An increase that results from a physical change at a source occurs when the emissions unit on which construction occurred becomes operational and begins to emit a particular pollutant. Any replacement unit that requires shakedown becomes operational only after a reasonable shakedown period, not to exceed 180 days.

(G) Paragraph (a)(1)(xii)(B) of this section shall not apply for determining creditable increases and decreases or after a change.

(vii) *Emissions unit* means any part of a stationary source that emits or would have the potential to emit any regulated NSR pollutant and includes an electric steam generating unit as defined in paragraph (a)(1)(xx) of this section. For purposes of this section, there are two types of emissions units as described in paragraphs (a)(1)(vii)(A) and (B) of this section.

(A) A new emissions unit is any emissions unit which is (or will be) newly constructed and which has existed for less than 2 years from the date such emissions unit first operated.

(B) An existing emissions unit is any emissions unit that does not meet the requirements in paragraph (a)(1)(vii)(A) of this section. A replacement unit, as defined in paragraph (a)(1)(xxi) of this section, is an existing emissions unit.

(viii) *Secondary emissons* means emissions which would occur as a result of the construction or operation of a major stationary source or major modification, but do not come from the major stationary source or major modification itself. For the purpose of this section, secondary emissions must be specific, well defined, quantifiable, and impact the same general area as the stationary source or modification which causes the secondary emissions. Secondary emissions include emissions from any offsite support facility which would not be constructed or increase its emissions except as a result of the construction of operation of the major stationary source of major modification. Secondary emissions do not include any emissions which come directly from a mobile source such as emissions from the tailpipe of a motor vehicle, from a train, or from a vessel.

(ix) *Fugitive emissions* means those emissions which could not reasonably pass through a stack, chimney, vent or other functionally equivalent opening.

(x)(A) *Significant* means, in reference to a net emissions increase or the potential of a source to emit any of the following pollutants, a rate of emissions that would equal or exceed any of the following rates:

POLLUTANT EMISSION RATE

Carbon monoxide: 100 tons per year (tpy)
Nitrogen oxides: 40 tpy
Sulfur dioxide: 40 tpy
Ozone: 40 tpy of volatile organic compounds or nitrogen oxides
Lead: 0.6 tpy
PM_{10}: 15 tpy
$PM_{2.5}$: 10 tpy of direct $PM_{2.5}$ emissions; 40 tpy of sulfur dioxide emissions; 40 tpy of nitrogen oxide emissions unless demonstrated not to be a $PM_{2.5}$ precursor under paragraph (a)(1)(xxxvii) of this section

(B) Notwithstanding the significant emissions rate for ozone in paragraph (a)(1)(x)(A) of this section, significant means, in reference to an emissions increase or a net emissions increase, any increase in actual emissions of volatile organic compounds that would result from any physical change in, or change in the method of operation of, a major stationary source locating in a serious or severe ozone nonattainment area that is subject to subpart 2, part D, title I of the Act, if such emissions increase of volatile organic compounds exceeds 25 tons per year.

(C) For the purposes of applying the requirements of paragraph (a)(8) of this section to modifications at major stationary sources of nitrogen oxides located in an ozone nonattainment area

or in an ozone transport region, the significant emission rates and other requirements for volatile organic compounds in paragraphs (a)(1)(x)(A), (B), and (E) of this section shall apply to nitrogen oxides emissions.

(D) Notwithstanding the significant emissions rate for carbon monoxide under paragraph (a)(1)(x)(A) of this section, significant means, in reference to an emissions increase or a net emissions increase, any increase in actual emissions of carbon monoxide that would result from any physical change in, or change in the method of operation of, a major stationary source in a serious nonattainment area for carbon monoxide if such increase equals or exceeds 50 tons per year, provided the Administrator has determined that stationary sources contribute significantly to carbon monoxide levels in that area.

(E) Notwithstanding the significant emissions rates for ozone under paragraphs (a)(1)(x)(A) and (B) of this section, any increase in actual emissions of volatile organic compounds from any emissions unit at a major stationary source of volatile organic compounds located in an extreme ozone nonattainment area that is subject to subpart 2, part D, title I of the Act shall be considered a significant net emissions increase.

(xi) *Allowable emissions* means the emissions rate of a stationary source calculated using the maximum rated capacity of the source (unless the source is subject to federally enforceable limits which restrict the operating rate, or hours of operation, or both) and the most stringent of the following:

(A) The applicable standards set forth in 40 CFR part 60 or 61;

(B) Any applicable State Implementation Plan emissions limitation including those with a future compliance date; or

(C) The emissions rate specified as a federally enforceable permit condition, including those with a future compliance date.

(xii)(A) *Actual emissions* means the actual rate of emissions of a regulated NSR pollutant from an emissions unit, as determined in accordance with paragraphs (a)(1)(xii)(B) through (D) of this section, except that this definition shall not apply for calculating whether a significant emissions increase has occurred, or for establishing a PAL under paragraph (f) of this section. Instead, paragraphs (a)(1)(xxviii) and (xxxv) of this section shall apply for those purposes.

(B) In general, actual emissions as of a particular date shall equal the average rate, in tons per year, at which the unit actually emitted the pollutant during a consecutive 24-month period which precedes the particular date and which is representative of normal source operation. The reviewing authority shall allow the use of a different time period upon a determination that it is more representative of normal source operation. Actual emissions shall be calculated using the unit's actual operating hours, production rates, and types of materials processed, stored, or combusted during the selected time period.

(C) The reviewing authority may presume that source-specific allowable emissions for the unit are equivalent to the actual emissions of the unit.

(D) For any emissions unit that has not begun normal operations on the particular date, actual emissions shall equal the potential to emit of the unit on that date.

(xiii) *Lowest achievable emission rate (LAER)* means, for any source, the more stringent rate of emissions based on the following:

(A) The most stringent emissions limitation which is contained in the implementation plan of any State for such class or category of stationary source, unless the owner or operator of the proposed stationary source demonstrates that such limitations are not achievable; or

(B) The most stringent emissions limitation which is achieved in practice by such class or category of stationary sources. This limitation, when applied to a modification, means the lowest achievable emissions rate for the new or modified emissions units within or stationary source. In no event shall the application of the term permit a proposed new or modified stationary source to emit any pollutant in excess of the amount allowable under

an applicable new source standard of performance.

(xiv) *Federally enforceable* means all limitations and conditions which are enforceable by the Administrator, including those requirements developed pursuant to 40 CFR parts 60 and 61, requirements within any applicable State implementation plan, any permit requirements established pursuant to 40 CFR 52.21 or under regulations approved pursuant to 40 CFR part 51, subpart I, including operating permits issued under an EPA-approved program that is incorporated into the State implementation plan and expressly requires adherence to any permit issued under such program.

(xv) *Begin actual construction* means in general, initiation of physical on-site construction activities on an emissions unit which are of a permanent nature. Such activities include, but are not limited to, installation of building supports and foundations, laying of underground pipework, and construction of permanent storage structures. With respect to a change in method of operating this term refers to those on-site activities other than preparatory activities which mark the initiation of the change.

(xvi) *Commence* as applied to construction of a major stationary source or major modification means that the owner or operator has all necessary preconstruction approvals or permits and either has:

(A) Begun, or caused to begin, a continuous program of actual on-site construction of the source, to be completed within a reasonable time; or

(B) Entered into binding agreements or contractual obligations, which cannot be canceled or modified without substantial loss to the owner or operator, to undertake a program of actual construction of the source to be completed within a reasonable time.

(xvii) *Necessary preconstruction approvals or permits* means those Federal air quality control laws and regulations and those air quality control laws and regulations which are part of the applicable State Implementation Plan.

(xviii) *Construction* means any physical change or change in the method of operation (including fabrication, erection, installation, demolition, or modification of an emissions unit) that would result in a change in emissions.

(xix) *Volatile organic compounds (VOC)* is as defined in § 51.100(s) of this part.

(xx) *Electric utility steam generating unit* means any steam electric generating unit that is constructed for the purpose of supplying more than one-third of its potential electric output capacity and more than 25 MW electrical output to any utility power distribution system for sale. Any steam supplied to a steam distribution system for the purpose of providing steam to a steam-electric generator that would produce electrical energy for sale is also considered in determining the electrical energy output capacity of the affected facility.

(xxi) *Replacement unit* means an emissions unit for which all the criteria listed in paragraphs (a)(1)(xxi)(A) through (D) of this section are met. No creditable emission reductions shall be generated from shutting down the existing emissions unit that is replaced.

(A) The emissions unit is a reconstructed unit within the meaning of § 60.15(b)(1) of this chapter, or the emissions unit completely takes the place of an existing emissions unit.

(B) The emissions unit is identical to or functionally equivalent to the replaced emissions unit.

(C) The replacement does not alter the basic design parameters (as discussed in paragraph (h)(2) of this section) of the process unit.

(D) The replaced emissions unit is permanently removed from the major stationary source, otherwise permanently disabled, or permanently barred from operation by a permit that is enforceable as a practical matter. If the replaced emissions unit is brought back into operation, it shall constitute a new emissions unit.

(xxii) *Temporary clean coal technology demonstration project* means a clean coal technology demonstration project that is operated for a period of 5 years or less, and which complies with the State Implementation Plan for the State in which the project is located and other requirements necessary to attain and maintain the national ambient air quality standards during the project and after it is terminated.

(xxiii) *Clean coal technology* means any technology, including technologies applied at the precombustion, combustion, or post combustion stage, at a new or existing facility which will achieve significant reductions in air emissions of sulfur dioxide or oxides of nitrogen associated with the utilization of coal in the generation of electricity, or process steam which was not in widespread use as of November 15, 1990.

(xxiv) *Clean coal technology demonstration project* means a project using funds appropriated under the heading ''Department of Energy-Clean Coal Technology,'' up to a total amount of $2,500,000,000 for commercial demonstration of clean coal technology, or similar projects funded through appropriations for the Environmental Protection Agency. The Federal contribution for a qualifying project shall be at least 20 percent of the total cost of the demonstration project.

(xxv) [Reserved]

(xxvi) *Pollution prevention* means any activity that through process changes, product reformulation or redesign, or substitution of less polluting raw materials, eliminates or reduces the release of air pollutants (including fugitive emissions) and other pollutants to the environment prior to recycling, treatment, or disposal; it does not mean recycling (other than certain ''in-process recycling'' practices), energy recovery, treatment, or disposal.

(xxvii) *Significant emissions increase* means, for a regulated NSR pollutant, an increase in emissions that is significant (as defined in paragraph (a)(1)(x) of this section) for that pollutant.

(xxviii)(A) *Projected actual emissions* means, the maximum annual rate, in tons per year, at which an existing emissions unit is projected to emit a regulated NSR pollutant in any one of the 5 years (12-month period) following the date the unit resumes regular operation after the project, or in any one of the 10 years following that date, if the project involves increasing the emissions unit's design capacity or its potential to emit of that regulated NSR pollutant and full utilization of the unit would result in a significant emissions increase or a significant net emissions increase at the major stationary source.

(B) In determining the projected actual emissions under paragraph (a)(1)(xxviii)(A) of this section before beginning actual construction, the owner or operator of the major stationary source:

(*1*) Shall consider all relevant information, including but not limited to, historical operational data, the company's own representations, the company's expected business activity and the company's highest projections of business activity, the company's filings with the State or Federal regulatory authorities, and compliance plans under the approved plan; and

(*2*) Shall include fugitive emissions to the extent quantifiable, and emissions associated with startups, shutdowns, and malfunctions; and

(*3*) Shall exclude, in calculating any increase in emissions that results from the particular project, that portion of the unit's emissions following the project that an existing unit could have accommodated during the consecutive 24-month period used to establish the baseline actual emissions under paragraph (a)(1)(xxxv) of this section and that are also unrelated to the particular project, including any increased utilization due to product demand growth; or,

(*4*) In lieu of using the method set out in paragraphs (a)(1)(xxviii)(B)(*1*) through (*3*) of this section, may elect to use the emissions unit's potential to emit, in tons per year, as defined under paragraph (a)(1)(iii) of this section.

(xxix) [Reserved]

(xxx) *Nonattainment major new source review (NSR) program* means a major source preconstruction permit program that has been approved by the Administrator and incorporated into the plan to implement the requirements of this section, or a program that implements part 51, appendix S, Sections I through VI of this chapter. Any permit issued under such a program is a major NSR permit.

(xxxi) *Continuous emissions monitoring system (CEMS)* means all of the equipment that may be required to meet the data acquisition and availability requirements of this section, to sample, condition (if applicable), analyze, and

provide a record of emissions on a continuous basis.

(xxxii) *Predictive emissions monitoring system (PEMS)* means all of the equipment necessary to monitor process and control device operational parameters (for example, control device secondary voltages and electric currents) and other information (for example, gas flow rate, O_2 or CO_2 concentrations), and calculate and record the mass emissions rate (for example, lb/hr) on a continuous basis.

(xxxiii) *Continuous parameter monitoring system (CPMS)* means all of the equipment necessary to meet the data acquisition and availability requirements of this section, to monitor process and control device operational parameters (for example, control device secondary voltages and electric currents) and other information (for example, gas flow rate, O_2 or CO_2 concentrations), and to record average operational parameter value(s) on a continuous basis.

(xxxiv) *Continuous emissions rate monitoring system (CERMS)* means the total equipment required for the determination and recording of the pollutant mass emissions rate (in terms of mass per unit of time).

(xxxv) *Baseline actual emissions* means the rate of emissions, in tons per year, of a regulated NSR pollutant, as determined in accordance with paragraphs (a)(1)(xxxv)(A) through (D) of this section.

(A) For any existing electric utility steam generating unit, baseline actual emissions means the average rate, in tons per year, at which the unit actually emitted the pollutant during any consecutive 24-month period selected by the owner or operator within the 5-year period immediately preceding when the owner or operator begins actual construction of the project. The reviewing authority shall allow the use of a different time period upon a determination that it is more representative of normal source operation.

(*1*) The average rate shall include fugitive emissions to the extent quantifiable, and emissions associated with startups, shutdowns, and malfunctions.

(*2*) The average rate shall be adjusted downward to exclude any non-compliant emissions that occurred while the source was operating above any emission limitation that was legally enforceable during the consecutive 24-month period.

(*3*) For a regulated NSR pollutant, when a project involves multiple emissions units, only one consecutive 24-month period must be used to determine the baseline actual emissions for the emissions units being changed. A different consecutive 24-month period can be used for each regulated NSR pollutant.

(*4*) The average rate shall not be based on any consecutive 24-month period for which there is inadequate information for determining annual emissions, in tons per year, and for adjusting this amount if required by paragraph (a)(1)(xxxv)(A)(*2*) of this section.

(B) For an existing emissions unit (other than an electric utility steam generating unit), baseline actual emissions means the average rate, in tons per year, at which the emissions unit actually emitted the pollutant during any consecutive 24-month period selected by the owner or operator within the 10-year period immediately preceding either the date the owner or operator begins actual construction of the project, or the date a complete permit application is received by the reviewing authority for a permit required either under this section or under a plan approved by the Administrator, whichever is earlier, except that the 10-year period shall not include any period earlier than November 15, 1990.

(*1*) The average rate shall include fugitive emissions to the extent quantifiable, and emissions associated with startups, shutdowns, and malfunctions.

(*2*) The average rate shall be adjusted downward to exclude any non-compliant emissions that occurred while the source was operating above an emission limitation that was legally enforceable during the consecutive 24-month period.

(*3*) The average rate shall be adjusted downward to exclude any emissions that would have exceeded an emission limitation with which the major stationary source must currently comply, had such major stationary source been required to comply with such limitations during the consecutive 24-month

period. However, if an emission limitation is part of a maximum achievable control technology standard that the Administrator proposed or promulgated under part 63 of this chapter, the baseline actual emissions need only be adjusted if the State has taken credit for such emissions reductions in an attainment demonstration or maintenance plan consistent with the requirements of paragraph (a)(3)(ii)(G) of this section.

(*4*) For a regulated NSR pollutant, when a project involves multiple emissions units, only one consecutive 24-month period must be used to determine the baseline actual emissions for the emissions units being changed. A different consecutive 24-month period can be used For each regulated NSR pollutant.

(*5*) The average rate shall not be based on any consecutive 24-month period for which there is inadequate information for determining annual emissions, in tons per year, and for adjusting this amount if required by paragraphs (a)(1)(xxxv)(B)(*2*) and (*3*) of this section.

(C) For a new emissions unit, the baseline actual emissions for purposes of determining the emissions increase that will result from the initial construction and operation of such unit shall equal zero; and thereafter, for all other purposes, shall equal the unit's potential to emit.

(D) For a PAL for a major stationary source, the baseline actual emissions shall be calculated for existing electric utility steam generating units in accordance with the procedures contained in paragraph (a)(1)(xxxv)(A) of this section, for other existing emissions units in accordance with the procedures contained in paragraph (a)(1)(xxxv)(B) of this section, and for a new emissions unit in accordance with the procedures contained in paragraph (a)(1)(xxxv)(C) of this section.

(xxxvi) [Reserved]

(xxxvii) *Regulated NSR pollutant,* for purposes of this section, means the following:

(A) Nitrogen oxides or any volatile organic compounds;

(B) Any pollutant for which a national ambient air quality standard has been promulgated;

(C) Any pollutant that is identified under this paragraph (a)(1)(xxxvii)(C) as a constituent or precursor of a general pollutant listed under paragraph (a)(1)(xxxvii)(A) or (B) of this section, provided that such constituent or precursor pollutant may only be regulated under NSR as part of regulation of the general pollutant. Precursors identified by the Administrator for purposes of NSR are the following:

(*1*) Volatile organic compounds and nitrogen oxides are precursors to ozone in all ozone nonattainment areas.

(*2*) Sulfur dioxide is a precursor to $PM_{2.5}$ in all $PM_{2.5}$ nonattainment areas.

(*3*) Nitrogen oxides are presumed to be precursors to $PM_{2.5}$ in all $PM_{2.5}$ nonattainment areas, unless the State demonstrates to the Administrator's satisfaction or EPA demonstrates that emissions of nitrogen oxides from sources in a specific area are not a significant contributor to that area's ambient $PM_{2.5}$ concentrations.

(*4*) Volatile organic compounds and ammonia are presumed not to be precursors to $PM_{2.5}$ in any $PM_{2.5}$ nonattainment area, unless the State demonstrates to the Administrator's satisfaction or EPA demonstrates that emissions of volatile organic compounds or ammonia from sources in a specific area are a significant contributor to that area's ambient $PM_{2.5}$ concentrations; or

(D) $PM_{2.5}$ emissions and PM_{10} emissions shall include gaseous emissions from a source or activity which condense to form particulate matter at ambient temperatures. On or after January 1, 2011 (or any earlier date established in the upcoming rulemaking codifying test methods), such condensable particulate matter shall be accounted for in applicability determinations and in establishing emissions limitations for $PM_{2.5}$ and PM_{10} in nonattainment major NSR permits. Compliance with emissions limitations for $PM_{2.5}$ and PM_{10} issued prior to this date shall not be based on condensable particulate matter unless required by the terms and conditions of the permit or the applicable implementation plan. Applicability determinations made prior to this date without accounting for condensable particulate matter shall not be considered in violation of

this section unless the applicable implementation plan required condensable particulate matter to be included.

(xxxviii) *Reviewing authority* means the State air pollution control agency, local agency, other State agency, Indian tribe, or other agency authorized by the Administrator to carry out a permit program under this section and § 51.166, or the Administrator in the case of EPA-implemented permit programs under § 52.21.

(xxxix) *Project* means a physical change in, or change in the method of operation of, an existing major stationary source.

(xl) *Best available control technology (BACT)* means an emissions limitation (including a visible emissions standard) based on the maximum degree of reduction for each regulated NSR pollutant which would be emitted from any proposed major stationary source or major modification which the reviewing authority, on a case-by-case basis, taking into account energy, environmental, and economic impacts and other costs, determines is achievable for such source or modification through application of production processes or available methods, systems, and techniques, including fuel cleaning or treatment or innovative fuel combustion techniques for control of such pollutant. In no event shall application of best available control technology result in emissions of any pollutant which would exceed the emissions allowed by any applicable standard under 40 CFR part 60 or 61. If the reviewing authority determines that technological or economic limitations on the application of measurement methodology to a particular emissions unit would make the imposition of an emissions standard infeasible, a design, equipment, work practice, operational standard, or combination thereof, may be prescribed instead to satisfy the requirement for the application of BACT. Such standard shall, to the degree possible, set forth the emissions reduction achievable by implementation of such design, equipment, work practice or operation, and shall provide for compliance by means which achieve equivalent results.

(xli) *Prevention of Significant Deterioration (PSD) permit* means any permit that is issued under a major source preconstruction permit program that has been approved by the Administrator and incorporated into the plan to implement the requirements of § 51.166 of this chapter, or under the program in § 52.21 of this chapter.

(xlii) *Federal Land Manager* means, with respect to any lands in the United States, the Secretary of the department with authority over such lands.

(xliii)(A) In general, *process unit* means any collection of structures and/or equipment that processes, assembles, applies, blends, or otherwise uses material inputs to produce or store an intermediate or a completed product. A single stationary source may contain more than one process unit, and a process unit may contain more than one emissions unit.

(B) Pollution control equipment is not part of the process unit, unless it serves a dual function as both process and control equipment. Administrative and warehousing facilities are not part of the process unit.

(C) For replacement cost purposes, components shared between two or more process units are proportionately allocated based on capacity.

(D) The following list identifies the process units at specific categories of stationary sources.

(*1*) For a steam electric generating facility, the process unit consists of those portions of the plant that contribute directly to the production of electricity. For example, at a pulverized coal-fired facility, the process unit would generally be the combination of those systems from the coal receiving equipment through the emission stack (excluding post-combustion pollution controls), including the coal handling equipment, pulverizers or coal crushers, feedwater heaters, ash handling, boiler, burners, turbine-generator set, condenser, cooling tower, water treatment system, air preheaters, and operating control systems. Each separate generating unit is a separate process unit.

(*2*) For a petroleum refinery, there are several categories of process units: those that separate and/or distill petroleum feedstocks; those that change molecular structures; petroleum treating processes; auxiliary facilities, such as

steam generators and hydrogen production units; and those that load, unload, blend or store intermediate or completed products.

(*3*) For an incinerator, the process unit would consist of components from the feed pit or refuse pit to the stack, including conveyors, combustion devices, heat exchangers and steam generators, quench tanks, and fans.

NOTE TO PARAGRAPH (a)(1)(xliii): By a court order on December 24, 2003, this paragraph (a)(1)(xliii) is stayed indefinitely. The stayed provisions will become effective immediately if the court terminates the stay. At that time, EPA will publish a document in the FEDERAL REGISTER advising the public of the termination of the stay.

(xliv) *Functionally equivalent component* means a component that serves the same purpose as the replaced component.

NOTE TO PARAGRAPH (a)(1)(xliv): By a court order on December 24, 2003, this paragraph (a)(1)(xliv) is stayed indefinitely. The stayed provisions will become effective immediately if the court terminates the stay. At that time, EPA will publish a document in the FEDERAL REGISTER advising the public of the termination of the stay.

(xlv) *Fixed capital cost* means the capital needed to provide all the depreciable components. ''Depreciable components'' refers to all components of fixed capital cost and is calculated by subtracting land and working capital from the total capital investment, as defined in paragraph (a)(1)(xlvi) of this section.

NOTE TO PARAGRAPH (a)(1)(xlv): By a court order on December 24, 2003, this paragraph (a)(1)(xlv) is stayed indefinitely. The stayed provisions will become effective immediately if the court terminates the stay. At that time, EPA will publish a document in the FEDERAL REGISTER advising the public of the termination of the stay.

(xlvi) *Total capital investment* means the sum of the following: All costs required to purchase needed process equipment (purchased equipment costs); the costs of labor and materials for installing that equipment (direct installation costs); the costs of site preparation and buildings; other costs such as engineering, construction and field expenses, fees to contractors, startup and performance tests, and contingencies (indirect installation costs); land for the process equipment; and working capital for the process equipment.

NOTE TO PARAGRAPH (a)(1)(xlvi): By a court order on December 24, 2003, this paragraph (a)(1)(xlvi) is stayed indefinitely. The stayed provisions will become effective immediately if the court terminates the stay. At that time, EPA will publish a document in the FEDERAL REGISTER advising the public of the termination of the stay.

(2) *Applicability procedures.* (i) Each plan shall adopt a preconstruction review program to satisfy the requirements of sections 172(c)(5) and 173 of the Act for any area designated nonattainment for any national ambient air quality standard under subpart C of 40 CFR part 81. Such a program shall apply to any new major stationary source or major modification that is major for the pollutant for which the area is designated nonattainment under section 107(d)(1)(A)(i) of the Act, if the stationary source or modification would locate anywhere in the designated nonattainment area.

(ii) Each plan shall use the specific provisions of paragraphs (a)(2)(ii)(A) through (F) of this section. Deviations from these provisions will be approved only if the State specifically demonstrates that the submitted provisions are more stringent than or at least as stringent in all respects as the corresponding provisions in paragraphs (a)(2)(ii)(A) through (F) of this section.

(A) Except as otherwise provided in paragraphs (a)(2)(iii) and (iv) of this section, and consistent with the definition of major modification contained in paragraph (a)(1)(v)(A) of this section, a project is a major modification for a regulated NSR pollutant if it causes two types of emissions increases—a significant emissions increase (as defined in paragraph (a)(1)(xxvii) of this section), and a significant net emissions increase (as defined in paragraphs (a)(1)(vi) and (x) of this section). The project is not a major modification if it does not cause a significant emissions increase. If the project causes a significant emissions increase, then the project is a major modification only if it also results in a significant net emissions increase.

(B) The procedure for calculating (before beginning actual construction)

whether a significant emissions increase (*i.e.*, the first step of the process) will occur depends upon the type of emissions units being modified, according to paragraphs (a)(2)(ii)(C) through (F) of this section. The procedure for calculating (before beginning actual construction) whether a significant net emissions increase will occur at the major stationary source (*i.e.*, the second step of the process) is contained in the definition in paragraph (a)(1)(vi) of this section. Regardless of any such preconstruction projections, a major modification results if the project causes a significant emissions increase and a significant net emissions increase.

(C) *Actual-to-projected-actual applicability test for projects that only involve existing emissions units.* A significant emissions increase of a regulated NSR pollutant is projected to occur if the sum of the difference between the projected actual emissions (as defined in paragraph (a)(1)(xxviii) of this section) and the baseline actual emissions (as defined in paragraphs (a)(1)(xxxv)(A) and (B) of this section, as applicable), for each existing emissions unit, equals or exceeds the significant amount for that pollutant (as defined in paragraph (a)(1)(x) of this section).

(D) *Actual-to-potential test for projects that only involve construction of a new emissions unit(s).* A significant emissions increase of a regulated NSR pollutant is projected to occur if the sum of the difference between the potential to emit (as defined in paragraph (a)(1)(iii) of this section) from each new emissions unit following completion of the project and the baseline actual emissions (as defined in paragraph (a)(1)(xxxv)(C) of this section) of these units before the project equals or exceeds the significant amount for that pollutant (as defined in paragraph (a)(1)(x) of this section).

(E) [Reserved]

(F) *Hybrid test for projects that involve multiple types of emissions units.* A significant emissions increase of a regulated NSR pollutant is projected to occur if the sum of the emissions increases for each emissions unit, using the method specified in paragraphs (a)(2)(ii)(C) through (D) of this section as applicable with respect to each emissions unit, for each type of emissions unit equals or exceeds the significant amount for that pollutant (as defined in paragraph (a)(1)(x) of this section).

(iii) The plan shall require that for any major stationary source for a PAL for a regulated NSR pollutant, the major stationary source shall comply with requirements under paragraph (f) of this section.

(3)(i) Each plan shall provide that for sources and modifications subject to any preconstruction review program adopted pursuant to this subsection the baseline for determining credit for emissions reductions is the emissions limit under the applicable State Implementation Plan in effect at the time the application to construct is filed, except that the offset baseline shall be the actual emissions of the source from which offset credit is obtained where;

(A) The demonstration of reasonable further progress and attainment of ambient air quality standards is based upon the actual emissions of sources located within a designated nonattainment area for which the preconstruction review program was adopted; or

(B) The applicable State Implementation Plan does not contain an emissions limitation for that source or source category.

(ii) The plan shall further provide that:

(A) Where the emissions limit under the applicable State Implementation Plan allows greater emissions than the potential to emit of the source, emissions offset credit will be allowed only for control below this potential;

(B) For an existing fuel combustion source, credit shall be based on the allowable emissions under the applicable State Implementation Plan for the type of fuel being burned at the time the application to construct is filed. If the existing source commits to switch to a cleaner fuel at some future date, emissions offset credit based on the allowable (or actual) emissions for the fuels involved is not acceptable, unless the permit is conditioned to require the use of a specified alternative control measure which would achieve the same degree of emissions reduction should the source switch back to a

dirtier fuel at some later date. The reviewing authority should ensure that adequate long-term supplies of the new fuel are available before granting emissions offset credit for fuel switches,

(C)(*1*) Emissions reductions achieved by shutting down an existing emission unit or curtailing production or operating hours may be generally credited for offsets if they meet the requirements in paragraphs (a)(3)(ii)(C)(*1*)(*i*) through (*ii*) of this section.

(*i*) Such reductions are surplus, permanent, quantifiable, and federally enforceable.

(*ii*) The shutdown or curtailment occurred after the last day of the base year for the SIP planning process. For purposes of this paragraph, a reviewing authority may choose to consider a prior shutdown or curtailment to have occurred after the last day of the base year if the projected emissions inventory used to develop the attainment demonstration explicitly includes the emissions from such previously shutdown or curtailed emission units. However, in no event may credit be given for shutdowns that occurred before August 7, 1977.

(*2*) Emissions reductions achieved by shutting down an existing emissions unit or curtailing production or operating hours and that do not meet the requirements in paragraph (a)(3)(ii)(C)(*1*)(*ii*) of this section may be generally credited only if:

(*i*) The shutdown or curtailment occurred on or after the date the construction permit application is filed; or

(*ii*) The applicant can establish that the proposed new emissions unit is a replacement for the shutdown or curtailed emissions unit, and the emissions reductions achieved by the shutdown or curtailment met the requirements of paragraph (a)(3)(ii)(C)(*1*)(*i*) of this section.

(D) No emissions credit may be allowed for replacing one hydrocarbon compound with another of lesser reactivity, except for those compounds listed in Table 1 of EPA's ''Recommended Policy on Control of Volatile Organic Compounds'' (42 FR 35314, July 8, 1977; (This document is also available from Mr. Ted Creekmore, Office of Air Quality Planning and Standards, (MD–15) Research Triangle Park, NC 27711.))

(E) All emission reductions claimed as offset credit shall be federally enforceable;

(F) Procedures relating to the permissible location of offsetting emissions shall be followed which are at least as stringent as those set out in 40 CFR part 51 appendix S section IV.D.

(G) Credit for an emissions reduction can be claimed to the extent that the reviewing authority has not relied on it in issuing any permit under regulations approved pursuant to 40 CFR part 51 subpart I or the State has not relied on it in demonstration attainment or reasonable further progress.

(H) [Reserved]

(I) [Reserved]

(J) The total tonnage of increased emissions, in tons per year, resulting from a major modification that must be offset in accordance with section 173 of the Act shall be determined by summing the difference between the allowable emissions after the modification (as defined by paragraph (a)(1)(xi) of this section) and the actual emissions before the modification (as defined in paragraph (a)(1)(xii) of this section) for each emissions unit.

(4) Each plan may provide that the provisions of this paragraph do not apply to a source or modification that would be a major stationary source or major modification only if fugitive emissions, to the extent quantifiable, are considered in calculating the potential to emit of the stationary source or modification and the source does not belong to any of the following categories:

(i) Coal cleaning plants (with thermal dryers);

(ii) Kraft pulp mills;

(iii) Portland cement plants;

(iv) Primary zinc smelters;

(v) Iron and steel mills;

(vi) Primary aluminum ore reduction plants;

(vii) Primary copper smelters;

(viii) Municipal incinerators capable of charging more than 250 tons of refuse per day;

(ix) Hydrofluoric, sulfuric, or citric acid plants;

(x) Petroleum refineries;

(xi) Lime plants;

(xii) Phosphate rock processing plants;

(xiii) Coke oven batteries;

(xiv) Sulfur recovery plants;

(xv) Carbon black plants (furnace process);

(xvi) Primary lead smelters;

(xvii) Fuel conversion plants;

(xviii) Sintering plants;

(xix) Secondary metal production plants;

(xx) Chemical process plants—The term chemical processing plant shall not include ethanol production facilities that produce ethanol by natural fermentation included in NAICS codes 325193 or 312140;

(xxi) Fossil-fuel boilers (or combination thereof) totaling more than 250 million British thermal units per hour heat input;

(xxii) Petroleum storage and transfer units with a total storage capacity exceeding 300,000 barrels;

(xxiii) Taconite ore processing plants;

(xxiv) Glass fiber processing plants;

(xxv) Charcoal production plants;

(xxvi) Fossil fuel-fired steam electric plants of more than 250 million British thermal units per hour heat input;

(xxvii) Any other stationary source category which, as of August 7, 1980, is being regulated under section 111 or 112 of the Act.

(5) Each plan shall include enforceable procedures to provide that:

(i) Approval to construct shall not relieve any owner or operator of the responsibility to comply fully with applicable provision of the plan and any other requirements under local, State or Federal law.

(ii) At such time that a particular source or modification becomes a major stationary source or major modification solely by virtue of a relaxation in any enforcement limitation which was established after August 7, 1980, on the capacity of the source or modification otherwise to emit a pollutant, such as a restriction on hours of operation, then the requirements of regulations approved pursuant to this section shall apply to the source or modification as though construction had not yet commenced on the source or modification;

(6) Each plan shall provide that, except as otherwise provided in paragraph (a)(6)(vi) of this section, the following specific provisions apply with respect to any regulated NSR pollutant emitted from projects at existing emissions units at a major stationary source (other than projects at a source with a PAL) in circumstances where there is a reasonable possibility, within the meaning of paragraph (a)(6)(vi) of this section, that a project that is not a part of a major modification may result in a significant emissions increase of such pollutant, and the owner or operator elects to use the method specified in paragraphs (a)(1)(xxviii)(B)(*1*) through (*3*) of this section for calculating projected actual emissions. Deviations from these provisions will be approved only if the State specifically demonstrates that the submitted provisions are more stringent than or at least as stringent in all respects as the corresponding provisions in paragraphs (a)(6)(i) through (vi) of this section.

(i) Before beginning actual construction of the project, the owner or operator shall document and maintain a record of the following information:

(A) A description of the project;

(B) Identification of the emissions unit(s) whose emissions of a regulated NSR pollutant could be affected by the project; and

(C) A description of the applicability test used to determine that the project is not a major modification for any regulated NSR pollutant, including the baseline actual emissions, the projected actual emissions, the amount of emissions excluded under paragraph (a)(1)(xxviii)(B)(*3*) of this section and an explanation for why such amount was excluded, and any netting calculations, if applicable.

(ii) If the emissions unit is an existing electric utility steam generating unit, before beginning actual construction, the owner or operator shall provide a copy of the information set out in paragraph (a)(6)(i) of this section to the reviewing authority. Nothing in this paragraph (a)(6)(ii) shall be construed to require the owner or operator of such a unit to obtain any determination from the reviewing authority before beginning actual construction.

(iii) The owner or operator shall monitor the emissions of any regulated NSR pollutant that could increase as a

result of the project and that is emitted by any emissions units identified in paragraph (a)(6)(i)(B) of this section; and calculate and maintain a record of the annual emissions, in tons per year on a calendar year basis, for a period of 5 years following resumption of regular operations after the change, or for a period of 10 years following resumption of regular operations after the change if the project increases the design capacity or potential to emit of that regulated NSR pollutant at such emissions unit.

(iv) If the unit is an existing electric utility steam generating unit, the owner or operator shall submit a report to the reviewing authority within 60 days after the end of each year during which records must be generated under paragraph (a)(6)(iii) of this section setting out the unit's annual emissions during the year that preceded submission of the report.

(v) If the unit is an existing unit other than an electric utility steam generating unit, the owner or operator shall submit a report to the reviewing authority if the annual emissions, in tons per year, from the project identified in paragraph (a)(6)(i) of this section, exceed the baseline actual emissions (as documented and maintained pursuant to paragraph (a)(6)(i)(C) of this section, by a significant amount (as defined in paragraph (a)(1)(x) of this section) for that regulated NSR pollutant, and if such emissions differ from the preconstruction projection as documented and maintained pursuant to paragraph (a)(6)(i)(C) of this section. Such report shall be submitted to the reviewing authority within 60 days after the end of such year. The report shall contain the following:

(A) The name, address and telephone number of the major stationary source;

(B) The annual emissions as calculated pursuant to paragraph (a)(6)(iii) of this section; and

(C) Any other information that the owner or operator wishes to include in the report (e.g., an explanation as to why the emissions differ from the preconstruction projection).

(vi) A ''reasonable possibility'' under paragraph (a)(6) of this section occurs when the owner or operator calculates the project to result in either:

(A) A projected actual emissions increase of at least 50 percent of the amount that is a ''significant emissions increase,'' as defined under paragraph (a)(1)(xxvii) of this section (without reference to the amount that is a significant net emissions increase), for the regulated NSR pollutant; or

(B) A projected actual emissions increase that, added to the amount of emissions excluded under paragraph (a)(1)(xxviii)(B)(*3*), sums to at least 50 percent of the amount that is a ''significant emissions increase,'' as defined under paragraph (a)(1)(xxvii) of this section (without reference to the amount that is a significant net emissions increase), for the regulated NSR pollutant. For a project for which a reasonable possibility occurs only within the meaning of paragraph (a)(6)(vi)(B) of this section, and not also within the meaning of paragraph (a)(6)(vi)(A) of this section, then provisions (a)(6)(ii) through (v) do not apply to the project.

(7) Each plan shall provide that the owner or operator of the source shall make the information required to be documented and maintained pursuant to paragraph (a)(6) of this section available for review upon a request for inspection by the reviewing authority or the general public pursuant to the requirements contained in §70.4(b)(3)(viii) of this chapter.

(8) The plan shall provide that the requirements of this section applicable to major stationary sources and major modifications of volatile organic compounds shall apply to nitrogen oxides emissions from major stationary sources and major modifications of nitrogen oxides in an ozone transport region or in any ozone nonattainment area, except in ozone nonattainment areas or in portions of an ozone transport region where the Administrator has granted a NO_X waiver applying the standards set forth under section 182(f) of the Act and the waiver continues to apply.

(9)(i) The plan shall require that in meeting the emissions offset requirements of paragraph (a)(3) of this section, the ratio of total actual emissions reductions to the emissions increase

shall be at least 1:1 unless an alternative ratio is provided for the applicable nonattainment area in paragraphs (a)(9)(ii) through (a)(9)(iv) of this section.

(ii) The plan shall require that in meeting the emissions offset requirements of paragraph (a)(3) of this section for ozone nonattainment areas that are subject to subpart 2, part D, title I of the Act, the ratio of total actual emissions reductions of VOC to the emissions increase of VOC shall be as follows:

(A) In any marginal nonattainment area for ozone—at least 1.1:1;

(B) In any moderate nonattainment area for ozone—at least 1.15:1;

(C) In any serious nonattainment area for ozone—at least 1.2:1;

(D) In any severe nonattainment area for ozone—at least 1.3:1 (except that the ratio may be at least 1.2:1 if the approved plan also requires all existing major sources in such nonattainment area to use BACT for the control of VOC); and

(E) In any extreme nonattainment area for ozone—at least 1.5:1 (except that the ratio may be at least 1.2:1 if the approved plan also requires all existing major sources in such nonattainment area to use BACT for the control of VOC); and

(iii) Notwithstanding the requirements of paragraph (a)(9)(ii) of this section for meeting the requirements of paragraph (a)(3) of this section, the ratio of total actual emissions reductions of VOC to the emissions increase of VOC shall be at least 1.15:1 for all areas within an ozone transport region that is subject to subpart 2, part D, title I of the Act, except for serious, severe, and extreme ozone nonattainment areas that are subject to subpart 2, part D, title I of the Act.

(iv) The plan shall require that in meeting the emissions offset requirements of paragraph (a)(3) of this section for ozone nonattainment areas that are subject to subpart 1, part D, title I of the Act (but are not subject to subpart 2, part D, title I of the Act, including 8-hour ozone nonattainment areas subject to 40 CFR 51.902(b)), the ratio of total actual emissions reductions of VOC to the emissions increase of VOC shall be at least 1:1.

(10) The plan shall require that the requirements of this section applicable to major stationary sources and major modifications of PM–10 shall also apply to major stationary sources and major modifications of PM–10 precursors, except where the Administrator determines that such sources do not contribute significantly to PM–10 levels that exceed the PM–10 ambient standards in the area.

(11) The plan shall require that in meeting the emissions offset requirements of paragraph (a)(3) of this section, the emissions offsets obtained shall be for the same regulated NSR pollutant unless interprecursor offsetting is permitted for a particular pollutant as specified in this paragraph. The plan may allow the offset requirements in paragraph (a)(3) of this section for direct $PM_{2.5}$ emissions or emissions of precursors of $PM_{2.5}$ to be satisfied by offsetting reductions in direct $PM_{2.5}$ emissions or emissions of any $PM_{2.5}$ precursor identified under paragraph (a)(1)(xxxvii)(C) of this section if such offsets comply with the interprecursor trading hierarchy and ratio established in the approved plan for a particular nonattainment area.

(b)(1) Each plan shall include a preconstruction review permit program or its equivalent to satisfy the requirements of section 110(a)(2)(D)(i) of the Act for any new major stationary source or major modification as defined in paragraphs (a)(1) (iv) and (v) of this section. Such a program shall apply to any such source or modification that would locate in any area designated as attainment or unclassifiable for any national ambient air quality standard pursuant to section 107 of the Act, when it would cause or contribute to a violation of any national ambient air quality standard.

(2) A major source or major modification will be considered to cause or contribute to a violation of a national ambient air quality standard when such source or modification would, at a minimum, exceed the following significance levels at any locality that does not or would not meet the applicable national standard:

Pollutant	Annual	Averaging time (hours)			
		24	8	3	1
SO_2	1.0 μg/m³	5 μg/m³		25 μg/m³	
PM_{10}	1.0 μg/m³	5 μg/m³			
$PM_{2.5}$	0.3 μg/m³	1.2 μg/m³			
NO_2	1.0 μg/m³				
CO			0.5 mg/m³		2 mg/m³

(3) Such a program may include a provision which allows a proposed major source or major modification subject to paragraph (b) of this section to reduce the impact of its emissions upon air quality by obtaining sufficient emission reductions to, at a minimum, compensate for its adverse ambient impact where the major source or major modification would otherwise cause or contribute to a violation of any national ambient air quality standard. The plan shall require that, in the absence of such emission reductions, the State or local agency shall deny the proposed construction.

(4) The requirements of paragraph (b) of this section shall not apply to a major stationary source or major modification with respect to a particular pollutant if the owner or operator demonstrates that, as to that pollutant, the source or modification is located in an area designated as nonattainment pursuant to section 107 of the Act.

(c)–(e) [Reserved]

(f) *Actuals PALs*. The plan shall provide for PALs according to the provisions in paragraphs (f)(1) through (15) of this section.

(1) *Applicability*. (i) The reviewing authority may approve the use of an actuals PAL for any existing major stationary source (except as provided in paragraph (f)(1)(ii) of this section) if the PAL meets the requirements in paragraphs (f)(1) through (15) of this section. The term ''PAL'' shall mean ''actuals PAL'' throughout paragraph (f) of this section.

(ii) The reviewing authority shall not allow an actuals PAL for VOC or NO_X for any major stationary source located in an extreme ozone nonattainment area.

(iii) Any physical change in or change in the method of operation of a major stationary source that maintains its total source-wide emissions below the PAL level, meets the requirements in paragraphs (f)(1) through (15) of this section, and complies with the PAL permit:

(A) Is not a major modification for the PAL pollutant;

(B) Does not have to be approved through the plan's nonattainment major NSR program; and

(C) Is not subject to the provisions in paragraph (a)(5)(ii) of this section (restrictions on relaxing enforceable emission limitations that the major stationary source used to avoid applicability of the nonattainment major NSR program).

(iv) Except as provided under paragraph (f)(1)(iii)(C) of this section, a major stationary source shall continue to comply with all applicable Federal or State requirements, emission limitations, and work practice requirements that were established prior to the effective date of the PAL.

(2) *Definitions*. The plan shall use the definitions in paragraphs (f)(2)(i) through (xi) of this section for the purpose of developing and implementing regulations that authorize the use of actuals PALs consistent with paragraphs (f)(1) through (15) of this section. When a term is not defined in these paragraphs, it shall have the meaning given in paragraph (a)(1) of this section or in the Act.

(i) *Actuals PAL* for a major stationary source means a PAL based on the baseline actual emissions (as defined in paragraph (a)(1)(xxxv) of this section) of all emissions units (as defined in paragraph (a)(1)(vii) of this section) at the source, that emit or have the potential to emit the PAL pollutant.

(ii) *Allowable emissions* means ''allowable emissions'' as defined in paragraph (a)(1)(xi) of this section, except as this definition is modified according to paragraphs (f)(2)(ii)(A) through (B) of this section.

(A) The allowable emissions for any emissions unit shall be calculated considering any emission limitations that are enforceable as a practical matter on the emissions unit's potential to emit.

(B) An emissions unit's potential to emit shall be determined using the definition in paragraph (a)(1)(iii) of this section, except that the words ''or enforceable as a practical matter'' should be added after ''federally enforceable.''

(iii) *Small emissions unit* means an emissions unit that emits or has the potential to emit the PAL pollutant in an amount less than the significant level for that PAL pollutant, as defined in paragraph (a)(1)(x) of this section or in the Act, whichever is lower.

(iv) *Major emissions unit* means:

(A) Any emissions unit that emits or has the potential to emit 100 tons per year or more of the PAL pollutant in an attainment area; or

(B) Any emissions unit that emits or has the potential to emit the PAL pollutant in an amount that is equal to or greater than the major source threshold for the PAL pollutant as defined by the Act for nonattainment areas. For example, in accordance with the definition of major stationary source in section 182(c) of the Act, an emissions unit would be a major emissions unit for VOC if the emissions unit is located in a serious ozone nonattainment area and it emits or has the potential to emit 50 or more tons of VOC per year.

(v) *Plantwide applicability limitation (PAL)* means an emission limitation expressed in tons per year, for a pollutant at a major stationary source, that is enforceable as a practical matter and established source-wide in accordance with paragraphs (f)(1) through (f)(15) of this section.

(vi) *PAL effective date* generally means the date of issuance of the PAL permit. However, the PAL effective date for an increased PAL is the date any emissions unit which is part of the PAL major modification becomes operational and begins to emit the PAL pollutant.

(vii) *PAL effective period* means the period beginning with the PAL effective date and ending 10 years later.

(viii) *PAL major modification* means, notwithstanding paragraphs (a)(1)(v) and (vi) of this section (the definitions for major modification and net emissions increase), any physical change in or change in the method of operation of the PAL source that causes it to emit the PAL pollutant at a level equal to or greater than the PAL.

(ix) *PAL permit* means the major NSR permit, the minor NSR permit, or the State operating permit under a program that is approved into the plan, or the title V permit issued by the reviewing authority that establishes a PAL for a major stationary source.

(x) *PAL pollutant* means the pollutant for which a PAL is established at a major stationary source.

(xi) *Significant emissions unit* means an emissions unit that emits or has the potential to emit a PAL pollutant in an amount that is equal to or greater than the significant level (as defined in paragraph (a)(1)(x) of this section or in the Act, whichever is lower) for that PAL pollutant, but less than the amount that would qualify the unit as a major emissions unit as defined in paragraph (f)(2)(iv) of this section.

(3) *Permit application requirements.* As part of a permit application requesting a PAL, the owner or operator of a major stationary source shall submit the following information to the reviewing authority for approval:

(i) A list of all emissions units at the source designated as small, significant or major based on their potential to emit. In addition, the owner or operator of the source shall indicate which, if any, Federal or State applicable requirements, emission limitations or work practices apply to each unit.

(ii) Calculations of the baseline actual emissions (with supporting documentation). Baseline actual emissions are to include emissions associated not only with operation of the unit, but also emissions associated with startup, shutdown and malfunction.

(iii) The calculation procedures that the major stationary source owner or operator proposes to use to convert the monitoring system data to monthly emissions and annual emissions based on a 12-month rolling total for each month as required by paragraph (f)(13)(i) of this section.

(4) *General requirements for establishing PALs.* (i) The plan allows the reviewing authority to establish a PAL at a major stationary source, provided that at a minimum, the requirements in paragraphs (f)(4)(i)(A) through (G) of this section are met.

(A) The PAL shall impose an annual emission limitation in tons per year, that is enforceable as a practical matter, for the entire major stationary source. For each month during the PAL effective period after the first 12 months of establishing a PAL, the major stationary source owner or operator shall show that the sum of the monthly emissions from each emissions unit under the PAL for the previous 12 consecutive months is less than the PAL (a 12-month average, rolled monthly). For each month during the first 11 months from the PAL effective date, the major stationary source owner or operator shall show that the sum of the preceding monthly emissions from the PAL effective date for each emissions unit under the PAL is less than the PAL.

(B) The PAL shall be established in a PAL permit that meets the public participation requirements in paragraph (f)(5) of this section.

(C) The PAL permit shall contain all the requirements of paragraph (f)(7) of this section.

(D) The PAL shall include fugitive emissions, to the extent quantifiable, from all emissions units that emit or have the potential to emit the PAL pollutant at the major stationary source.

(E) Each PAL shall regulate emissions of only one pollutant.

(F) Each PAL shall have a PAL effective period of 10 years.

(G) The owner or operator of the major stationary source with a PAL shall comply with the monitoring, recordkeeping, and reporting requirements provided in paragraphs (f)(12) through (14) of this section for each emissions unit under the PAL through the PAL effective period.

(ii) At no time (during or after the PAL effective period) are emissions reductions of a PAL pollutant, which occur during the PAL effective period, creditable as decreases for purposes of offsets under paragraph (a)(3)(ii) of this section unless the level of the PAL is reduced by the amount of such emissions reductions and such reductions would be creditable in the absence of the PAL.

(5) *Public participation requirement for PALs.* PALs for existing major stationary sources shall be established, renewed, or increased through a procedure that is consistent with §§51.160 and 51.161 of this chapter. This includes the requirement that the reviewing authority provide the public with notice of the proposed approval of a PAL permit and at least a 30-day period for submittal of public comment. The reviewing authority must address all material comments before taking final action on the permit.

(6) *Setting the 10-year actuals PAL level.* (i) Except as provided in paragraph (f)(6)(ii) of this section, the plan shall provide that the actuals PAL level for a major stationary source shall be established as the sum of the baseline actual emissions (as defined in paragraph (a)(1)(xxxv) of this section) of the PAL pollutant for each emissions unit at the source; plus an amount equal to the applicable significant level for the PAL pollutant under paragraph (a)(1)(x) of this section or under the Act, whichever is lower. When establishing the actuals PAL level, for a PAL pollutant, only one consecutive 24-month period must be used to determine the baseline actual emissions for all existing emissions units. However, a different consecutive 24-month period may be used for each different PAL pollutant. Emissions associated with units that were permanently shut down after this 24-month period must be subtracted from the PAL level. The reviewing authority shall specify a reduced PAL level(s) (in tons/yr) in the PAL permit to become effective on the future compliance date(s) of any applicable Federal or State regulatory requirement(s) that the reviewing authority is aware of prior to issuance of the PAL permit. For instance, if the source owner or operator will be required to reduce emissions from industrial boilers in half from baseline emissions of 60 ppm NO_X to a new rule limit of 30 ppm, then the permit shall contain a future effective PAL level that is equal to the current

PAL level reduced by half of the original baseline emissions of such unit(s).

(ii) For newly constructed units (which do not include modifications to existing units) on which actual construction began after the 24-month period, in lieu of adding the baseline actual emissions as specified in paragraph (f)(6)(i) of this section, the emissions must be added to the PAL level in an amount equal to the potential to emit of the units.

(7) *Contents of the PAL permit.* The plan shall require that the PAL permit contain, at a minimum, the information in paragraphs (f)(7)(i) through (x) of this section.

(i) The PAL pollutant and the applicable source-wide emission limitation in tons per year.

(ii) The PAL permit effective date and the expiration date of the PAL (PAL effective period).

(iii) Specification in the PAL permit that if a major stationary source owner or operator applies to renew a PAL in accordance with paragraph (f)(10) of this section before the end of the PAL effective period, then the PAL shall not expire at the end of the PAL effective period. It shall remain in effect until a revised PAL permit is issued by the reviewing authority.

(iv) A requirement that emission calculations for compliance purposes include emissions from startups, shutdowns and malfunctions.

(v) A requirement that, once the PAL expires, the major stationary source is subject to the requirements of paragraph (f)(9) of this section.

(vi) The calculation procedures that the major stationary source owner or operator shall use to convert the monitoring system data to monthly emissions and annual emissions based on a 12-month rolling total for each month as required by paragraph (f)(13)(i) of this section.

(vii) A requirement that the major stationary source owner or operator monitor all emissions units in accordance with the provisions under paragraph (f)(12) of this section.

(viii) A requirement to retain the records required under paragraph (f)(13) of this section on site. Such records may be retained in an electronic format.

(ix) A requirement to submit the reports required under paragraph (f)(14) of this section by the required deadlines.

(x) Any other requirements that the reviewing authority deems necessary to implement and enforce the PAL.

(8) *PAL effective period and reopening of the PAL permit.* The plan shall require the information in paragraphs (f)(8)(i) and (ii) of this section.

(i) *PAL effective period.* The reviewing authority shall specify a PAL effective period of 10 years.

(ii) *Reopening of the PAL permit.* (A) During the PAL effective period, the plan shall require the reviewing authority to reopen the PAL permit to:

(*1*) Correct typographical/calculation errors made in setting the PAL or reflect a more accurate determination of emissions used to establish the PAL.

(*2*) Reduce the PAL if the owner or operator of the major stationary source creates creditable emissions reductions for use as offsets under paragraph (a)(3)(ii) of this section.

(*3*) Revise the PAL to reflect an increase in the PAL as provided under paragraph (f)(11) of this section.

(B) The plan shall provide the reviewing authority discretion to reopen the PAL permit for the following:

(*1*) Reduce the PAL to reflect newly applicable Federal requirements (for example, NSPS) with compliance dates after the PAL effective date.

(*2*) Reduce the PAL consistent with any other requirement, that is enforceable as a practical matter, and that the State may impose on the major stationary source under the plan.

(*3*) Reduce the PAL if the reviewing authority determines that a reduction is necessary to avoid causing or contributing to a NAAQS or PSD increment violation, or to an adverse impact on an air quality related value that has been identified for a Federal Class I area by a Federal Land Manager and for which information is available to the general public.

(C) Except for the permit reopening in paragraph (f)(8)(ii)(A)(*1*) of this section for the correction of typographical/calculation errors that do not increase the PAL level, all other reopenings shall be carried out in accordance with the public participation

requirements of paragraph (f)(5) of this section.

(9) *Expiration of a PAL.* Any PAL which is not renewed in accordance with the procedures in paragraph (f)(10) of this section shall expire at the end of the PAL effective period, and the requirements in paragraphs (f)(9)(i) through (v) of this section shall apply.

(i) Each emissions unit (or each group of emissions units) that existed under the PAL shall comply with an allowable emission limitation under a revised permit established according to the procedures in paragraphs (f)(9)(i)(A) through (B) of this section.

(A) Within the time frame specified for PAL renewals in paragraph (f)(10)(ii) of this section, the major stationary source shall submit a proposed allowable emission limitation for each emissions unit (or each group of emissions units, if such a distribution is more appropriate as decided by the reviewing authority) by distributing the PAL allowable emissions for the major stationary source among each of the emissions units that existed under the PAL. If the PAL had not yet been adjusted for an applicable requirement that became effective during the PAL effective period, as required under paragraph (f)(10)(v) of this section, such distribution shall be made as if the PAL had been adjusted.

(B) The reviewing authority shall decide whether and how the PAL allowable emissions will be distributed and issue a revised permit incorporating allowable limits for each emissions unit, or each group of emissions units, as the reviewing authority determines is appropriate.

(ii) Each emissions unit(s) shall comply with the allowable emission limitation on a 12-month rolling basis. The reviewing authority may approve the use of monitoring systems (source testing, emission factors, etc.) other than CEMS, CERMS, PEMS or CPMS to demonstrate compliance with the allowable emission limitation.

(iii) Until the reviewing authority issues the revised permit incorporating allowable limits for each emissions unit, or each group of emissions units, as required under paragraph (f)(9)(i)(A) of this section, the source shall continue to comply with a source-wide, multi-unit emissions cap equivalent to the level of the PAL emission limitation.

(iv) Any physical change or change in the method of operation at the major stationary source will be subject to the nonattainment major NSR requirements if such change meets the definition of major modification in paragraph (a)(1)(v) of this section.

(v) The major stationary source owner or operator shall continue to comply with any State or Federal applicable requirements (BACT, RACT, NSPS, etc.) that may have applied either during the PAL effective period or prior to the PAL effective period except for those emission limitations that had been established pursuant to paragraph (a)(5)(ii) of this section, but were eliminated by the PAL in accordance with the provisions in paragraph (f)(1)(iii)(C) of this section.

(10) *Renewal of a PAL.* (i) The reviewing authority shall follow the procedures specified in paragraph (f)(5) of this section in approving any request to renew a PAL for a major stationary source, and shall provide both the proposed PAL level and a written rationale for the proposed PAL level to the public for review and comment. During such public review, any person may propose a PAL level for the source for consideration by the reviewing authority.

(ii) *Application deadline.* The plan shall require that a major stationary source owner or operator shall submit a timely application to the reviewing authority to request renewal of a PAL. A timely application is one that is submitted at least 6 months prior to, but not earlier than 18 months from, the date of permit expiration. This deadline for application submittal is to ensure that the permit will not expire before the permit is renewed. If the owner or operator of a major stationary source submits a complete application to renew the PAL within this time period, then the PAL shall continue to be effective until the revised permit with the renewed PAL is issued.

(iii) *Application requirements.* The application to renew a PAL permit shall contain the information required in paragraphs (f)(10)(iii)(A) through (D) of this section.

(A) The information required in paragraphs (f)(3)(i) through (iii) of this section.

(B) A proposed PAL level.

(C) The sum of the potential to emit of all emissions units under the PAL (with supporting documentation).

(D) Any other information the owner or operator wishes the reviewing authority to consider in determining the appropriate level for renewing the PAL.

(iv) *PAL adjustment.* In determining whether and how to adjust the PAL, the reviewing authority shall consider the options outlined in paragraphs (f)(10)(iv)(A) and (B) of this section. However, in no case may any such adjustment fail to comply with paragraph (f)(10)(iv)(C) of this section.

(A) If the emissions level calculated in accordance with paragraph (f)(6) of this section is equal to or greater than 80 percent of the PAL level, the reviewing authority may renew the PAL at the same level without considering the factors set forth in paragraph (f)(10)(iv)(B) of this section; or

(B) The reviewing authority may set the PAL at a level that it determines to be more representative of the source's baseline actual emissions, or that it determines to be appropriate considering air quality needs, advances in control technology, anticipated economic growth in the area, desire to reward or encourage the source's voluntary emissions reductions, or other factors as specifically identified by the reviewing authority in its written rationale.

(C) Notwithstanding paragraphs (f)(10)(iv)(A) and (B) of this section,

(*1*) If the potential to emit of the major stationary source is less than the PAL, the reviewing authority shall adjust the PAL to a level no greater than the potential to emit of the source; and

(*2*) The reviewing authority shall not approve a renewed PAL level higher than the current PAL, unless the major stationary source has complied with the provisions of paragraph (f)(11) of this section (increasing a PAL).

(v) If the compliance date for a State or Federal requirement that applies to the PAL source occurs during the PAL effective period, and if the reviewing authority has not already adjusted for such requirement, the PAL shall be adjusted at the time of PAL permit renewal or title V permit renewal, whichever occurs first.

(11) *Increasing a PAL during the PAL effective period.* (i) The plan shall require that the reviewing authority may increase a PAL emission limitation only if the major stationary source complies with the provisions in paragraphs (f)(11)(i)(A) through (D) of this section.

(A) The owner or operator of the major stationary source shall submit a complete application to request an increase in the PAL limit for a PAL major modification. Such application shall identify the emissions unit(s) contributing to the increase in emissions so as to cause the major stationary source's emissions to equal or exceed its PAL.

(B) As part of this application, the major stationary source owner or operator shall demonstrate that the sum of the baseline actual emissions of the small emissions units, plus the sum of the baseline actual emissions of the significant and major emissions units assuming application of BACT equivalent controls, plus the sum of the allowable emissions of the new or modified emissions unit(s) exceeds the PAL. The level of control that would result from BACT equivalent controls on each significant or major emissions unit shall be determined by conducting a new BACT analysis at the time the application is submitted, unless the emissions unit is currently required to comply with a BACT or LAER requirement that was established within the preceding 10 years. In such a case, the assumed control level for that emissions unit shall be equal to the level of BACT or LAER with which that emissions unit must currently comply.

(C) The owner or operator obtains a major NSR permit for all emissions unit(s) identified in paragraph (f)(11)(i)(A) of this section, regardless of the magnitude of the emissions increase resulting from them (that is, no significant levels apply). These emissions unit(s) shall comply with any emissions requirements resulting from the nonattainment major NSR program process (for example, LAER),

even though they have also become subject to the PAL or continue to be subject to the PAL.

(D) The PAL permit shall require that the increased PAL level shall be effective on the day any emissions unit that is part of the PAL major modification becomes operational and begins to emit the PAL pollutant.

(ii) The reviewing authority shall calculate the new PAL as the sum of the allowable emissions for each modified or new emissions unit, plus the sum of the baseline actual emissions of the significant and major emissions units (assuming application of BACT equivalent controls as determined in accordance with paragraph (f)(11)(i)(B)), plus the sum of the baseline actual emissions of the small emissions units.

(iii) The PAL permit shall be revised to reflect the increased PAL level pursuant to the public notice requirements of paragraph (f)(5) of this section.

(12) *Monitoring requirements for PALs*—(i) *General requirements*. (A) Each PAL permit must contain enforceable requirements for the monitoring system that accurately determines plantwide emissions of the PAL pollutant in terms of mass per unit of time. Any monitoring system authorized for use in the PAL permit must be based on sound science and meet generally acceptable scientific procedures for data quality and manipulation. Additionally, the information generated by such system must meet minimum legal requirements for admissibility in a judicial proceeding to enforce the PAL permit.

(B) The PAL monitoring system must employ one or more of the four general monitoring approaches meeting the minimum requirements set forth in paragraphs (f)(12)(ii)(A) through (D) of this section and must be approved by the reviewing authority.

(C) Notwithstanding paragraph (f)(12)(i)(B) of this section, you may also employ an alternative monitoring approach that meets paragraph (f)(12)(i)(A) of this section if approved by the reviewing authority.

(D) Failure to use a monitoring system that meets the requirements of this section renders the PAL invalid.

(ii) Minimum Performance Requirements for Approved Monitoring Approaches. The following are acceptable general monitoring approaches when conducted in accordance with the minimum requirements in paragraphs (f)(12)(iii) through (ix) of this section:

(A) Mass balance calculations for activities using coatings or solvents;

(B) CEMS;

(C) CPMS or PEMS; and

(D) Emission Factors.

(iii) Mass Balance Calculations. An owner or operator using mass balance calculations to monitor PAL pollutant emissions from activities using coating or solvents shall meet the following requirements:

(A) Provide a demonstrated means of validating the published content of the PAL pollutant that is contained in or created by all materials used in or at the emissions unit;

(B) Assume that the emissions unit emits all of the PAL pollutant that is contained in or created by any raw material or fuel used in or at the emissions unit, if it cannot otherwise be accounted for in the process; and

(C) Where the vendor of a material or fuel, which is used in or at the emissions unit, publishes a range of pollutant content from such material, the owner or operator must use the highest value of the range to calculate the PAL pollutant emissions unless the reviewing authority determines there is site-specific data or a site-specific monitoring program to support another content within the range.

(iv) CEMS. An owner or operator using CEMS to monitor PAL pollutant emissions shall meet the following requirements:

(A) CEMS must comply with applicable Performance Specifications found in 40 CFR part 60, appendix B; and

(B) CEMS must sample, analyze and record data at least every 15 minutes while the emissions unit is operating.

(v) CPMS or PEMS. An owner or operator using CPMS or PEMS to monitor PAL pollutant emissions shall meet the following requirements:

(A) The CPMS or the PEMS must be based on current site-specific data demonstrating a correlation between the monitored parameter(s) and the PAL pollutant emissions across the

range of operation of the emissions unit; and

(B) Each CPMS or PEMS must sample, analyze, and record data at least every 15 minutes, or at another less frequent interval approved by the reviewing authority, while the emissions unit is operating.

(vi) Emission factors. An owner or operator using emission factors to monitor PAL pollutant emissions shall meet the following requirements:

(A) All emission factors shall be adjusted, if appropriate, to account for the degree of uncertainty or limitations in the factors' development;

(B) The emissions unit shall operate within the designated range of use for the emission factor, if applicable; and

(C) If technically practicable, the owner or operator of a significant emissions unit that relies on an emission factor to calculate PAL pollutant emissions shall conduct validation testing to determine a site-specific emission factor within 6 months of PAL permit issuance, unless the reviewing authority determines that testing is not required.

(vii) A source owner or operator must record and report maximum potential emissions without considering enforceable emission limitations or operational restrictions for an emissions unit during any period of time that there is no monitoring data, unless another method for determining emissions during such periods is specified in the PAL permit.

(viii) Notwithstanding the requirements in paragraphs (f)(12)(iii) through (vii) of this section, where an owner or operator of an emissions unit cannot demonstrate a correlation between the monitored parameter(s) and the PAL pollutant emissions rate at all operating points of the emissions unit, the reviewing authority shall, at the time of permit issuance:

(A) Establish default value(s) for determining compliance with the PAL based on the highest potential emissions reasonably estimated at such operating point(s); or

(B) Determine that operation of the emissions unit during operating conditions when there is no correlation between monitored parameter(s) and the PAL pollutant emissions is a violation of the PAL.

(ix) Re-validation. All data used to establish the PAL pollutant must be re-validated through performance testing or other scientifically valid means approved by the reviewing authority. Such testing must occur at least once every 5 years after issuance of the PAL.

(13) *Recordkeeping requirements.* (i) The PAL permit shall require an owner or operator to retain a copy of all records necessary to determine compliance with any requirement of paragraph (f) of this section and of the PAL, including a determination of each emissions unit's 12-month rolling total emissions, for 5 years from the date of such record.

(ii) The PAL permit shall require an owner or operator to retain a copy of the following records for the duration of the PAL effective period plus 5 years:

(A) A copy of the PAL permit application and any applications for revisions to the PAL; and

(B) Each annual certification of compliance pursuant to title V and the data relied on in certifying the compliance.

(14) *Reporting and notification requirements.* The owner or operator shall submit semi-annual monitoring reports and prompt deviation reports to the reviewing authority in accordance with the applicable title V operating permit program. The reports shall meet the requirements in paragraphs (f)(14)(i) through (iii).

(i) Semi-Annual Report. The semi-annual report shall be submitted to the reviewing authority within 30 days of the end of each reporting period. This report shall contain the information required in paragraphs (f)(14)(i)(A) through (G) of this section.

(A) The identification of owner and operator and the permit number.

(B) Total annual emissions (tons/year) based on a 12-month rolling total for each month in the reporting period recorded pursuant to paragraph (f)(13)(i) of this section.

(C) All data relied upon, including, but not limited to, any Quality Assurance or Quality Control data, in calculating the monthly and annual PAL pollutant emissions.

(D) A list of any emissions units modified or added to the major stationary source during the preceding 6-month period.

(E) The number, duration, and cause of any deviations or monitoring malfunctions (other than the time associated with zero and span calibration checks), and any corrective action taken.

(F) A notification of a shutdown of any monitoring system, whether the shutdown was permanent or temporary, the reason for the shutdown, the anticipated date that the monitoring system will be fully operational or replaced with another monitoring system, and whether the emissions unit monitored by the monitoring system continued to operate, and the calculation of the emissions of the pollutant or the number determined by method included in the permit, as provided by paragraph (f)(12)(vii) of this section.

(G) A signed statement by the responsible official (as defined by the applicable title V operating permit program) certifying the truth, accuracy, and completeness of the information provided in the report.

(ii) Deviation report. The major stationary source owner or operator shall promptly submit reports of any deviations or exceedance of the PAL requirements, including periods where no monitoring is available. A report submitted pursuant to §70.6(a)(3)(iii)(B) of this chapter shall satisfy this reporting requirement. The deviation reports shall be submitted within the time limits prescribed by the applicable program implementing §70.6(a)(3)(iii)(B) of this chapter. The reports shall contain the following information:

(A) The identification of owner and operator and the permit number;

(B) The PAL requirement that experienced the deviation or that was exceeded;

(C) Emissions resulting from the deviation or the exceedance; and

(D) A signed statement by the responsible official (as defined by the applicable title V operating permit program) certifying the truth, accuracy, and completeness of the information provided in the report.

(iii) Re-validation results. The owner or operator shall submit to the reviewing authority the results of any re-validation test or method within 3 months after completion of such test or method.

(15) *Transition requirements.* (i) No reviewing authority may issue a PAL that does not comply with the requirements in paragraphs (f)(1) through (15) of this section after the Administrator has approved regulations incorporating these requirements into a plan.

(ii) The reviewing authority may supersede any PAL which was established prior to the date of approval of the plan by the Administrator with a PAL that complies with the requirements of paragraphs (f)(1) through (15) of this section.

(g) If any provision of this section, or the application of such provision to any person or circumstance, is held invalid, the remainder of this section, or the application of such provision to persons or circumstances other than those as to which it is held invalid, shall not be affected thereby.

(h) *Equipment replacement provision.* Without regard to other considerations, routine maintenance, repair and replacement includes, but is not limited to, the replacement of any component of a process unit with an identical or functionally equivalent component(s), and maintenance and repair activities that are part of the replacement activity, provided that all of the requirements in paragraphs (h)(1) through (3) of this section are met.

(1) *Capital Cost threshold for Equipment Replacement.* (i) For an *electric utility steam generating unit,* as defined in §51.165(a)(1)(xx), the fixed capital cost of the replacement component(s) plus the cost of any associated maintenance and repair activities that are part of the replacement shall not exceed 20 percent of the replacement value of the process unit, at the time the equipment is replaced. For a process unit that is not an electric utility steam generating unit the fixed capital cost of the replacement component(s) plus the cost of any associated maintenance

and repair activities that are part of the replacement shall not exceed 20 percent of the replacement value of the process unit, at the time the equipment is replaced.

(ii) In determining the replacement value of the process unit; and, except as otherwise allowed under paragraph (h)(1)(iii) of this section, the owner or operator shall determine the replacement value of the process unit on an estimate of the fixed capital cost of constructing a new process unit, or on the current appraised value of the process unit.

(iii) As an alternative to paragraph (h)(1)(ii) of this section for determining the replacement value of a process unit, an owner or operator may choose to use insurance value (where the insurance value covers only complete replacement), investment value adjusted for inflation, or another accounting procedure if such procedure is based on Generally Accepted Accounting Principles, provided that the owner or operator sends a notice to the reviewing authority. The first time that an owner or operator submits such a notice for a particular process unit, the notice may be submitted at any time, but any subsequent notice for that process unit may be submitted only at the beginning of the process unit's fiscal year. Unless the owner or operator submits a notice to the reviewing authority, then paragraph (h)(1)(ii) of this section will be used to establish the replacement value of the process unit. Once the owner or operator submits a notice to use an alternative accounting procedure, the owner or operator must continue to use that procedure for the entire fiscal year for that process unit. In subsequent fiscal years, the owner or operator must continue to use this selected procedure unless and until the owner or operator sends another notice to the reviewing authority selecting another procedure consistent with this paragraph or paragraph (h)(1)(ii) of this section at the beginning of such fiscal year.

(2) *Basic design parameters*. The replacement does not change the basic design parameter(s) of the process unit to which the activity pertains.

NOTE TO PARAGRAPH (h): By a court order on December 24, 2003, this paragraph (h) is stayed indefinitely. The stayed provisions will become effective immediately if the court terminates the stay. At that time, EPA will publish a document in the FEDERAL REGISTER advising the public of the termination of the stay.

(i) Except as provided in paragraph (h)(2)(iii) of this section, for a process unit at a steam electric generating facility, the owner or operator may select as its basic design parameters either maximum hourly heat input and maximum hourly fuel consumption rate or maximum hourly electric output rate and maximum steam flow rate. When establishing fuel consumption specifications in terms of weight or volume, the minimum fuel quality based on British Thermal Units content shall be used for determining the basic design parameter(s) for a coal-fired electric utility steam generating unit.

(ii) Except as provided in paragraph (h)(2)(iii) of this section, the basic design parameter(s) for any process unit that is not at a steam electric generating facility are maximum rate of fuel or heat input, maximum rate of material input, or maximum rate of product output. Combustion process units will typically use maximum rate of fuel input. For sources having multiple end products and raw materials, the owner or operator should consider the primary product or primary raw material when selecting a basic design parameter.

(iii) If the owner or operator believes the basic design parameter(s) in paragraphs (h)(2)(i) and (ii) of this section is not appropriate for a specific industry or type of process unit, the owner or operator may propose to the reviewing authority an alternative basic design parameter(s) for the source's process unit(s). If the reviewing authority approves of the use of an alternative basic design parameter(s), the reviewing authority shall issue a permit that is legally enforceable that records such basic design parameter(s) and requires the owner or operator to comply with such parameter(s).

(iv) The owner or operator shall use credible information, such as results of historic maximum capability tests, design information from the manufacturer, or engineering calculations, in

establishing the magnitude of the basic design parameter(s) specified in paragraphs (h)(2)(i) and (ii) of this section.

(v) If design information is not available for a process unit, then the owner or operator shall determine the process unit's basic design parameter(s) using the maximum value achieved by the process unit in the five-year period immediately preceding the planned activity.

(vi) Efficiency of a process unit is not a basic design parameter.

(3) The replacement activity shall not cause the process unit to exceed any emission limitation, or operational limitation that has the effect of constraining emissions, that applies to the process unit and that is legally enforceable.

[51 FR 40669, Nov. 7, 1986]

EDITORIAL NOTE: For FEDERAL REGISTER citations affecting §51.165, see the List of CFR Sections Affected, which appears in the Finding Aids section of the printed volume and at *www.fdsys.gov*.

EFFECTIVE DATE NOTE: At 76 FR 17552, Mar. 30, 2011, §51.165, paragraphs (a)(1)(v)(G) and (v)(1)(vi)(C) *(3)* are stayed indefinitely.

§51.166 Prevention of significant deterioration of air quality.

(a)(1) *Plan requirements*. In accordance with the policy of section 101(b)(1) of the Act and the purposes of section 160 of the Act, each applicable State Implementation Plan and each applicable Tribal Implementation Plan shall contain emission limitations and such other measures as may be necessary to prevent significant deterioration of air quality.

(2) *Plan revisions*. If a State Implementation Plan revision would result in increased air quality deterioration over any baseline concentration, the plan revision shall include a demonstration that it will not cause or contribute to a violation of the applicable increment(s). If a plan revision proposing less restrictive requirements was submitted after August 7, 1977 but on or before any applicable baseline date and was pending action by the Administrator on that date, no such demonstration is necessary with respect to the area for which a baseline date would be established before final action is taken on the plan revision. Instead, the assessment described in paragraph (a)(4) of this section, shall review the expected impact to the applicable increment(s).

(3) *Required plan revision*. If the State or the Administrator determines that a plan is substantially inadequate to prevent significant deterioration or that an applicable increment is being violated, the plan shall be revised to correct the inadequacy or the violation. The plan shall be revised within 60 days of such a finding by a State or within 60 days following notification by the Administrator, or by such later date as prescribed by the Administrator after consultation with the State.

(4) *Plan assessment*. The State shall review the adequacy of a plan on a periodic basis and within 60 days of such time as information becomes available that an applicable increment is being violated.

(5) *Public participation*. Any State action taken under this paragraph shall be subject to the opportunity for public hearing in accordance with procedures equivalent to those established in §51.102.

(6) *Amendments*. (i) Any State required to revise its implementation plan by reason of an amendment to this section, with the exception of amendments to add new maximum allowable increases or other measures pursuant to section 166(a) of the Act, shall adopt and submit such plan revision to the Administrator for approval no later than 3 years after such amendment is published in the FEDERAL REGISTER. With regard to a revision to an implementation plan by reason of an amendment to paragraph (c) of this section to add maximum allowable increases or other measures, the State shall submit such plan revision to the Administrator for approval within 21 months after such amendment is published in the FEDERAL REGISTER.

(ii) Any revision to an implementation plan that would amend the provisions for the prevention of significant air quality deterioration in the plan shall specify when and as to what sources and modifications the revision is to take effect.

(iii) Any revision to an implementation plan that an amendment to this section required shall take effect no

later than the date of its approval and may operate prospectively.

(7) *Applicability*. Each plan shall contain procedures that incorporate the requirements in paragraphs (a)(7)(i) through (vi) of this section.

(i) The requirements of this section apply to the construction of any new major stationary source (as defined in paragraph (b)(1) of this section) or any project at an existing major stationary source in an area designated as attainment or unclassifiable under sections 107(d)(1)(A)(ii) or (iii) of the Act.

(ii) The requirements of paragraphs (j) through (r) of this section apply to the construction of any new major stationary source or the major modification of any existing major stationary source, except as this section otherwise provides.

(iii) No new major stationary source or major modification to which the requirements of paragraphs (j) through (r)(5) of this section apply shall begin actual construction without a permit that states that the major stationary source or major modification will meet those requirements.

(iv) Each plan shall use the specific provisions of paragraphs (a)(7)(iv)(*a*) through (*f*) of this section. Deviations from these provisions will be approved only if the State specifically demonstrates that the submitted provisions are more stringent than or at least as stringent in all respects as the corresponding provisions in paragraphs (a)(7)(iv)(*a*) through (*f*) of this section.

(*a*) Except as otherwise provided in paragraphs (a)(7)(v) and (vi) of this section, and consistent with the definition of major modification contained in paragraph (b)(2) of this section, a project is a major modification for a regulated NSR pollutant if it causes two types of emissions increases—a significant emissions increase (as defined in paragraph (b)(39) of this section), and a significant net emissions increase (as defined in paragraphs (b)(3) and (b)(23) of this section). The project is not a major modification if it does not cause a significant emissions increase. If the project causes a significant emissions increase, then the project is a major modification only if it also results in a significant net emissions increase.

(*b*) The procedure for calculating (before beginning actual construction) whether a significant emissions increase (*i.e.*, the first step of the process) will occur depends upon the type of emissions units being modified, according to paragraphs (a)(7)(iv)(*c*) through (*f*) of this section. The procedure for calculating (before beginning actual construction) whether a significant net emissions increase will occur at the major stationary source (*i.e.*, the second step of the process) is contained in the definition in paragraph (b)(3) of this section. Regardless of any such preconstruction projections, a major modification results if the project causes a significant emissions increase and a significant net emissions increase.

(*c*) *Actual-to-projected-actual applicability test for projects that only involve existing emissions units*. A significant emissions increase of a regulated NSR pollutant is projected to occur if the sum of the difference between the projected actual emissions (as defined in paragraph (b)(40) of this section) and the baseline actual emissions (as defined in paragraphs (b)(47)(i) and (ii) of this section) for each existing emissions unit, equals or exceeds the significant amount for that pollutant (as defined in paragraph (b)(23) of this section).

(*d*) *Actual-to-potential test for projects that only involve construction of a new emissions unit(s)*. A significant emissions increase of a regulated NSR pollutant is projected to occur if the sum of the difference between the potential to emit (as defined in paragraph (b)(4) of this section) from each new emissions unit following completion of the project and the baseline actual emissions (as defined in paragraph (b)(47)(iii) of this section) of these units before the project equals or exceeds the significant amount for that pollutant (as defined in paragraph (b)(23) of this section).

(*e*) [Reserved]

(*f*) *Hybrid test for projects that involve multiple types of emissions units*. A significant emissions increase of a regulated NSR pollutant is projected to occur if the sum of the emissions increases for each emissions unit, using the method specified in paragraphs

(a)(7)(iv)(*c*) through (*d*) of this section as applicable with respect to each emissions unit, for each type of emissions unit equals or exceeds the significant amount for that pollutant (as defined in paragraph (b)(23) of this section).

(v) The plan shall require that for any major stationary source for a PAL for a regulated NSR pollutant, the major stationary source shall comply with requirements under paragraph (w) of this section.

(b) *Definitions*. All State plans shall use the following definitions for the purposes of this section. Deviations from the following wording will be approved only if the State specifically demonstrates that the submitted definition is more stringent, or at least as stringent, in all respects as the corresponding definitions below:

(1)(i) *Major stationary source* means:

(*a*) Any of the following stationary sources of air pollutants which emits, or has the potential to emit, 100 tons per year or more of any regulated NSR pollutant: Fossil fuel-fired steam electric plants of more than 250 million British thermal units per hour heat input, coal cleaning plants (with thermal dryers), kraft pulp mills, portland cement plants, primary zinc smelters, iron and steel mill plants, primary aluminum ore reduction plants (with thermal dryers), primary copper smelters, municipal incinerators capable of charging more than 250 tons of refuse per day, hydrofluoric, sulfuric, and nitric acid plants, petroleum refineries, lime plants, phosphate rock processing plants, coke oven batteries, sulfur recovery plants, carbon black plants (furnace process), primary lead smelters, fuel conversion plants, sintering plants, secondary metal production plants, chemical process plants (which does not include ethanol production facilities that produce ethanol by natural fermentation included in NAICS codes 325193 or 312140), fossil-fuel boilers (or combinations thereof) totaling more than 250 million British thermal units per hour heat input, petroleum storage and transfer units with a total storage capacity exceeding 300,000 barrels, taconite ore processing plants, glass fiber processing plants, and charcoal production plants;

(*b*) Notwithstanding the stationary source size specified in paragraph (b)(1)(i)(*a*) of this section, any stationary source which emits, or has the potential to emit, 250 tons per year or more of a regulated NSR pollutant; or

(*c*) Any physical change that would occur at a stationary source not otherwise qualifying under paragraph (b)(1) of this section, as a major stationary source if the change would constitute a major stationary source by itself.

(ii) A major source that is major for volatile organic compounds or NO_X shall be considered major for ozone.

(iii) The fugitive emissions of a stationary source shall not be included in determining for any of the purposes of this section whether it is a major stationary source, unless the source belongs to one of the following categories of stationary sources:

(*a*) Coal cleaning plants (with thermal dryers);

(*b*) Kraft pulp mills;

(*c*) Portland cement plants;

(*d*) Primary zinc smelters;

(*e*) Iron and steel mills;

(*f*) Primary aluminum ore reduction plants;

(*g*) Primary copper smelters;

(*h*) Municipal incinerators capable of charging more than 250 tons of refuse per day;

(*i*) Hydrofluoric, sulfuric, or nitric acid plants;

(*j*) Petroleum refineries;

(*k*) Lime plants;

(*l*) Phosphate rock processing plants;

(*m*) Coke oven batteries;

(*n*) Sulfur recovery plants;

(*o*) Carbon black plants (furnace process);

(*p*) Primary lead smelters;

(*q*) Fuel conversion plants;

(*r*) Sintering plants;

(*s*) Secondary metal production plants;

(*t*) Chemical process plants—The term chemical processing plant shall not include ethanol production facilities that produce ethanol by natural fermentation included in NAICS codes 325193 or 312140;

(*u*) Fossil-fuel boilers (or combination thereof) totaling more than 250 million British thermal units per hour heat input;

(*v*) Petroleum storage and transfer units with a total storage capacity exceeding 300,000 barrels;

(*w*) Taconite ore processing plants;

(*x*) Glass fiber processing plants;

(*y*) Charcoal production plants;

(*z*) Fossil fuel-fired steam electric plants of more that 250 million British thermal units per hour heat input;

(*aa*) Any other stationary source category which, as of August 7, 1980, is being regulated under section 111 or 112 of the Act.

(2)(i) *Major modification* means any physical change in or change in the method of operation of a major stationary source that would result in: a significant emissions increase (as defined in paragraph (b)(39) of this section) of a regulated NSR pollutant (as defined in paragraph (b)(49) of this section); and a significant net emissions increase of that pollutant from the major stationary source.

(ii) Any significant emissions increase (as defined at paragraph (b)(39) of this section) from any emissions units or net emissions increase (as defined in paragraph (b)(3) of this section) at a major stationary source that is significant for volatile organic compounds or NO_X shall be considered significant for ozone.

(iii) A physical change or change in the method of operation shall not include:

(*a*) Routine maintenance, repair and replacement. Routine maintenance, repair and replacement shall include, but not be limited to, any activity(s) that meets the requirements of the equipment replacement provisions contained in paragraph (y) of this section;

NOTE TO PARAGRAPH (b)(2)(iii)(*a*): On December 24, 2003, the second sentence of this paragraph (b)(2)(iii)(*a*) is stayed indefinitely by court order. The stayed provisions will become effective immediately if the court terminates the stay. At that time, EPA will publish a document in the FEDERAL REGISTER advising the public of the termination of the stay.

(*b*) Use of an alternative fuel or raw material by reason of any order under section 2 (a) and (b) of the Energy Supply and Environmental Coordination Act of 1974 (or any superseding legislation) or by reason of a natural gas curtailment plan pursuant to the Federal Power Act;

(*c*) Use of an alternative fuel by reason of an order or rule under section 125 of the Act;

(*d*) Use of an alternative fuel at a steam generating unit to the extent that the fuel is generated from municipal solid waste;

(*e*) Use of an alternative fuel or raw material by a stationary source which:

(*1*) The source was capable of accommodating before January 6, 1975, unless such change would be prohibited under any federally enforceable permit condition which was established after January 6, 1975 pursuant to 40 CFR 52.21 or under regulations approved pursuant to 40 CFR subpart I or § 51.166; or

(*2*) The source is approved to use under any permit issued under 40 CFR 52.21 or under regulations approved pursuant to 40 CFR 51.166;

(*f*) An increase in the hours of operation or in the production rate, unless such change would be prohibited under any federally enforceable permit condition which was established after January 6, 1975, pursuant to 40 CFR 52.21 or under regulations approved pursuant to 40 CFR subpart I or § 51.166.

(*g*) Any change in ownership at a stationary source.

(*h*) [Reserved]

(*i*) The installation, operation, cessation, or removal of a temporary clean coal technology demonstration project, provided that the project complies with:

(*1*) The State implementation plan for the State in which the project is located; and

(*2*) Other requirements necessary to attain and maintain the national ambient air quality standards during the project and after it is terminated.

(*j*) The installation or operation of a permanent clean coal technology demonstration project that constitutes repowering, provided that the project does not result in an increase in the potential to emit of any regulated pollutant emitted by the unit. This exemption shall apply on a pollutant-by-pollutant basis.

(*k*) The reactivation of a very clean coal-fired electric utility steam generating unit.

(iv) This definition shall not apply with respect to a particular regulated NSR pollutant when the major stationary source is complying with the requirements under paragraph (w) of this section for a PAL for that pollutant. Instead, the definition at paragraph (w)(2)(viii) of this section shall apply.

(v) Fugitive emissions shall not be included in determining for any of the purposes of this section whether a physical change in or change in the method of operation of a major stationary source is a major modification, unless the source belongs to one of the source categories listed in paragraph (b)(1)(iii) of this section.

(3)(i) *Net emissions increase* means, with respect to any regulated NSR pollutant emitted by a major stationary source, the amount by which the sum of the following exceeds zero:

(*a*) The increase in emissions from a particular physical change or change in the method of operation at a stationary source as calculated pursuant to paragraph (a)(7)(iv) of this section; and

(*b*) Any other increases and decreases in actual emissions at the major stationary source that are contemporaneous with the particular change and are otherwise creditable. Baseline actual emissions for calculating increases and decreases under this paragraph (b)(3)(i)(*b*) shall be determined as provided in paragraph (b)(47), except that paragraphs (b)(47)(i)(*c*) and (b)(47)(ii)(*d*) of this section shall not apply.

(ii) An increase or decrease in actual emissions is contemporaneous with the increase from the particular change only if it occurs within a reasonable period (to be specified by the State) before the date that the increase from the particular change occurs.

(iii) An increase or decrease in actual emissions is creditable only if:

(*a*) It occurs within a reasonable period (to be specified by the reviewing authority); and

(*b*) The reviewing authority has not relied on it in issuing a permit for the source under regulations approved pursuant to this section, which permit is in effect when the increase in actual emissions from the particular change occurs; and

(*c*) The increase or decrease in emissions did not occur at a Clean Unit, except as provided in paragraphs (t)(8) and (u)(10) of this section.

(*d*) As it pertains to an increase or decrease in fugitive emissions (to the extent quantifiable), it occurs at an emissions unit that is part of one of the source categories listed in paragraph (b)(1)(iii) of this section or it occurs at an emission unit that is located at a major stationary source that belongs to one of the listed source categories. Fugitive emission increases or decreases are not included for those emissions units located at a facility whose primary activity is not represented by one of the source categories listed in paragraph (b)(1)(iii) of this section and that are not, by themselves, part of a listed source category.

(iv) An increase or decrease in actual emissions of sulfur dioxide, particulate matter, or nitrogen oxides that occurs before the applicable minor source baseline date is creditable only if it is required to be considered in calculating the amount of maximum allowable increases remaining available.

(v) An increase in actual emissions is creditable only to the extent that the new level of actual emissions exceeds the old level.

(vi) A decrease in actual emissions is creditable only to the extent that:

(*a*) The old level of actual emissions or the old level of allowable emissions, whichever is lower, exceeds the new level of actual emissions;

(*b*) It is enforceable as a practical matter at and after the time that actual construction on the particular change begins;

(*c*) It has approximately the same qualitative significance for public health and welfare as that attributed to the increase from the particular change; and

(vii) An increase that results from a physical change at a source occurs when the emissions unit on which construction occurred becomes operational and begins to emit a particular pollutant. Any replacement unit that requires shakedown becomes operational only after a reasonable shakedown period, not to exceed 180 days.

(viii) Paragraph (b)(21)(ii) of this section shall not apply for determining creditable increases and decreases.

(4) *Potential to emit* means the maximum capacity of a stationary source to emit a pollutant under its physical and operational design. Any physical or operational limitation on the capacity of the source to emit a pollutant, including air pollution control equipment and restrictions on hours of operation or on the type or amount of material combusted, stored, or processed, shall be treated as part of its design if the limitation or the effect it would have on emissions is federally enforceable. Secondary emissions do not count in determining the potential to emit of a stationary source.

(5) *Stationary source* means any building, structure, facility, or installation which emits or may emit a regulated NSR pollutant.

(6) *Building, structure, facility, or installation* means all of the pollutant-emitting activities which belong to the same industrial grouping, are located on one or more contiguous or adjacent properties, and are under the control of the same person (or persons under common control) except the activities of any vessel. Pollutant-emitting activities shall be considered as part of the same industrial grouping if they belong to the same *Major Group* (*i.e.*, which have the same two-digit code) as described in the *Standard Industrial Classification Manual, 1972,* as amended by the 1977 Supplement (U.S. Government Printing Office stock numbers 4101–0066 and 003–005–00176–0, respectively).

(7) *Emissions unit* means any part of a stationary source that emits or would have the potential to emit any regulated NSR pollutant and includes an electric utility steam generating unit as defined in paragraph (b)(30) of this section. For purposes of this section, there are two types of emissions units as described in paragraphs (b)(7)(i) and (ii) of this section.

(i) A new emissions unit is any emissions unit that is (or will be) newly constructed and that has existed for less than 2 years from the date such emissions unit first operated.

(ii) An existing emissions unit is any emissions unit that does not meet the requirements in paragraph (b)(7)(i) of this section. A replacement unit, as defined in paragraph (b)(32) of this section, is an existing emissions unit.

(8) *Construction* means any physical change or change in the method of operation (including fabrication, erection, installation, demolition, or modification of an emissions unit) that would result in a change in emissions.

(9) *Commence* as applied to construction of a major stationary source or major modification means that the owner or operator has all necessary preconstruction approvals or permits and either has:

(i) Begun, or caused to begin, a continuous program of actual on-site construction of the source, to be completed within a reasonable time; or

(ii) Entered into binding agreements or contractual obligations, which cannot be cancelled or modified without substantial loss to the owner or operator, to undertake a program of actual construction of the source to be completed within a reasonable time.

(10) *Necessary preconstruction approvals or permits* means those permits or approvals required under Federal air quality control laws and regulations and those air quality control laws and regulations which are part of the applicable State Implementation Plan.

(11) *Begin actual construction* means, in general, initiation of physical on-site construction activities on an emissions unit which are of a permanent nature. Such activities include, but are not limited to, installation of building supports and foundations, laying of underground pipework, and construction of permanent storage structures. With respect to a change in method of operation this term refers to those on-site activities, other than preparatory activities, which mark the initiation of the change.

(12) *Best available control technology* means an emissions limitation (including a visible emissions standard) based on the maximum degree of reduction for each a regulated NSR pollutant which would be emitted from any proposed major stationary source or major modification which the reviewing authority, on a case-by-case basis, taking into account energy, environmental, and economic impacts and other costs, determines is achievable for such

source or modification through application of production processes or available methods, systems, and techniques, including fuel cleaning or treatment or innovative fuel combination techniques for control of such pollutant. In no event shall application of best available control technology result in emissions of any pollutant which would exceed the emissions allowed by any applicable standard under 40 CFR parts 60 and 61. If the reviewing authority determines that technological or economic limitations on the application of measurement methodology to a particular emissions unit would make the imposition of an emissions standard infeasible, a design, equipment, work practice, operational standard or combination thereof, may be prescribed instead to satisfy the requirement for the application of best available control technology. Such standard shall, to the degree possible, set forth the emissions reduction achievable by implementation of such design, equipment, work practice or operation, and shall provide for compliance by means which achieve equivalent results.

(13)(i) *Baseline concentration* means that ambient concentration level that exists in the baseline area at the time of the applicable minor source baseline date. A baseline concentration is determined for each pollutant for which a minor source baseline date is established and shall include:

(*a*) The actual emissions, as defined in paragraph (b)(21) of this section, representative of sources in existence on the applicable minor source baseline date, except as provided in paragraph (b)(13)(ii) of this section;

(*b*) The allowable emissions of major stationary sources that commenced construction before the major source baseline date, but were not in operation by the applicable minor source baseline date.

(ii) The following will not be included in the baseline concentration and will affect the applicable maximum allowable increase(s):

(*a*) Actual emissions, as defined in paragraph (b)(21) of this section, from any major stationary source on which construction commenced after the major source baseline date; and

(*b*) Actual emissions increases and decreases, as defined in paragraph (b)(21) of this section, at any stationary source occurring after the minor source baseline date.

(14)(i) *Major source baseline date* means:

(*a*) In the case of PM_{10} and sulfur dioxide, January 6, 1975;

(*b*) In the case of nitrogen dioxide, February 8, 1988; and

(*c*) In the case of $PM_{2.5}$, October 20, 2010.

(ii) *Minor source baseline date* means the earliest date after the trigger date on which a major stationary source or a major modification subject to 40 CFR 52.21 or to regulations approved pursuant to 40 CFR 51.166 submits a complete application under the relevant regulations. The trigger date is:

(*a*) In the case of PM_{10} and sulfur dioxide, August 7, 1977;

(*b*) In the case of nitrogen dioxide, February 8, 1988; and

(*c*) In the case of $PM_{2.5}$, October 20, 2011.

(iii) The baseline date is established for each pollutant for which increments or other equivalent measures have been established if:

(*a*) The area in which the proposed source or modification would construct is designated as attainment or unclassifiable under section 107(d)(1)(A)(ii) or (iii) of the Act for the pollutant on the date of its complete application under 40 CFR 52.21 or under regulations approved pursuant to 40 CFR 51.166; and

(*b*) In the case of a major stationary source, the pollutant would be emitted in significant amounts, or, in the case of a major modification, there would be a significant net emissions increase of the pollutant.

(iv) Any minor source baseline date established originally for the TSP increments shall remain in effect and shall apply for purposes of determining the amount of available PM–10 increments, except that the reviewing authority may rescind any such minor source baseline date where it can be shown, to the satisfaction of the reviewing authority, that the emissions increase from the major stationary source, or the net emissions increase

from the major modification, responsible for triggering that date did not result in a significant amount of PM–10 emissions.

(15)(i) *Baseline area* means any intrastate area (and every part thereof) designated as attainment or unclassifiable under section 107(d)(1)(A)(ii) or (iii) of the Act in which the major source or major modification establishing the minor source baseline date would construct or would have an air quality impact for the pollutant for which the baseline date is established, as follows: Equal to or greater than 1 μg/m^3 (annual average) for SO_2, NO_2, or PM_{10}; or equal or greater than 0.3 μg/m^3 (annual average) for $PM_{2.5}$.

(ii) Area redesignations under section 107(d)(1)(A)(ii) or (iii) of the Act cannot intersect or be smaller than the area of impact of any major stationary source or major modification which:

(*a*) Establishes a minor source baseline date; or

(*b*) Is subject to 40 CFR 52.21 or under regulations approved pursuant to 40 CFR 51.166, and would be constructed in the same State as the State proposing the redesignation.

(iii) Any baseline area established originally for the TSP increments shall remain in effect and shall apply for purposes of determining the amount of available PM–10 increments, except that such baseline area shall not remain in effect if the permit authority rescinds the corresponding minor source baseline date in accordance with paragraph (b)(14)(iv) of this section.

(16) *Allowable emissions* means the emissions rate of a stationary source calculated using the maximum rated capacity of the source (unless the source is subject to federally enforceable limits which restrict the operating rate, or hours of operation, or both) and the most stringent of the following:

(i) The applicable standards as set forth in 40 CFR parts 60 and 61;

(ii) The applicable State Implementation Plan emissions limitation, including those with a future compliance date; or

(iii) The emissions rate specified as a federally enforceable permit condition.

(17) *Federally enforceable* means all limitations and conditions which are enforceable by the Administrator, including those requirements developed pursuant to 40 CFR parts 60 and 61, requirements within any applicable State implementation plan, any permit requirements established pursuant to 40 CFR 52.21 or under regulations approved pursuant to 40 CFR part 51, subpart I, including operating permits issued under an EPA-approved program that is incorporated into the State implementation plan and expressly requires adherence to any permit issued under such program.

(18) *Secondary emissions* means emissions which occur as a result of the construction or operation of a major stationary source or major modification, but do not come from the major stationary source or major modification itself. For the purposes of this section, secondary emissions must be specific, well defined, quantifiable, and impact the same general areas the stationary source modification which causes the secondary emissions. Secondary emissions include emissions from any offsite support facility which would not be constructed or increase its emissions except as a result of the construction or operation of the major stationary source or major modification. Secondary emissions do not include any emissions which come directly from a mobile source, such as emissions from the tailpipe of a motor vehicle, from a train, or from a vessel.

(19) *Innovative control technology* means any system of air pollution control that has not been adequately demonstrated in practice, but would have a substantial likelihood of achieving greater continuous emissions reduction than any control system in current practice or of achieving at least comparable reductions at lower cost in terms of energy, economics, or nonair quality environmental impacts.

(20) Fugitive emissions means those emissions which could not reasonably pass through a stack, chimney, vent, or other functionally equivalent opening.

(21)(i) *Actual emissions* means the actual rate of emissions of a regulated NSR pollutant from an emissions unit, as determined in accordance with paragraphs (b)(21)(ii) through (iv) of this section, except that this definition shall not apply for calculating whether

a significant emissions increase has occurred, or for establishing a PAL under paragraph (w) of this section. Instead, paragraphs (b)(40) and (b)(47) of this section shall apply for those purposes.

(ii) In general, actual emissions as of a particular date shall equal the average rate, in tons per year, at which the unit actually emitted the pollutant during a consecutive 24-month period which precedes the particular date and which is representative of normal source operation. The reviewing authority shall allow the use of a different time period upon a determination that it is more representative of normal source operation. Actual emissions shall be calculated using the unit's actual operating hours, production rates, and types of materials processed, stored, or combusted during the selected time period.

(iii) The reviewing authority may presume that source-specific allowable emissions for the unit are equivalent to the actual emissions of the unit.

(iv) For any emissions unit that has not begun normal operations on the particular date, actual emissions shall equal the potential to emit of the unit on that date.

(22) *Complete* means, in reference to an application for a permit, that the application contains all the information necessary for processing the application. Designating an application complete for purposes of permit processing does not preclude the reviewing authority from requesting or accepting any additional information.

(23)(i) *Significant* means, in reference to a net emissions increase or the potential of a source to emit any of the following pollutants, a rate of emissions that would equal or exceed any of the following rates:

POLLUTANT AND EMISSIONS RATE

Carbon monoxide: 100 tons per year (tpy)
Nitrogen oxides: 40 tpy
Sulfur dioxide: 40 tpy
Particulate matter: 25 tpy of particulate matter emissions. 15 tpy of PM_{10} emissions
$PM_{2.5}$: 10 tpy of direct $PM_{2.5}$ emissions; 40 tpy of sulfur dioxide emissions; 40 tpy of nitrogen oxide emissions unless demonstrated not to be a $PM_{2.5}$ precursor under paragraph (b)(49) of this section
Ozone: 40 tpy of volatile organic compounds or nitrogen oxides
Lead: 0.6 tpy
Fluorides: 3 tpy
Sulfuric acid mist: 7 tpy
Hydrogen sulfide (H_2S): 10 tpy
Total reduced sulfur (including H_2S): 10 tpy
Reduced sulfur compounds (including H_2S): 10 tpy
Municipal waste combustor organics (measured as total tetra-through octa-chlorinated dibenzo-p-dioxins and dibenzofurans): 3.2×10^{-6} megagrams per year (3.5×10^{-6} tons per year)
Municipal waste combustor metals (measured as particulate matter): 14 megagrams per year (15 tons per year)
Municipal waste combustor acid gases (measured as sulfur dioxide and hydrogen chloride): 36 megagrams per year (40 tons per year)
Municipal solid waste landfill emissions (measured as nonmethane organic compounds): 45 megagrams per year (50 tons per year)

(ii) *Significant* means, in reference to a net emissions increase or the potential of a source to emit a regulated NSR pollutant that paragraph (b)(23)(i) of this section, does not list, any emissions rate.

(iii) Notwithstanding paragraph (b)(23)(i) of this section, *significant* means any emissions rate or any net emissions increase associated with a major stationary source or major modification, which would construct within 10 kilometers of a Class I area, and have an impact on such area equal to or greater than 1 $\mu g/m^3$ (24-hour average).

(24) *Federal Land Manager* means, with respect to any lands in the United States, the Secretary of the department with authority over such lands.

(25) *High terrain* means any area having an elevation 900 feet or more above the base of the stack of a source.

(26) *Low terrain* means any area other than high terrain.

(27) *Indian Reservation* means any federally recognized reservation established by Treaty, Agreement, Executive Order, or Act of Congress.

(28) *Indian Governing Body* means the governing body of any tribe, band, or group of Indians subject to the jurisdiction of the United States and recognized by the United States as possessing power of self-government.

(29) *Volatile organic compounds (VOC)* is as defined in §51.100(s) of this part.

(30) *Electric utility steam generating unit* means any steam electric generating unit that is constructed for the purpose of supplying more than one-third of its potential electric output capacity and more than 25 MW electrical output to any utility power distribution system for sale. Any steam supplied to a steam distribution system for the purpose of providing steam to a steam-electric generator that would produce electrical energy for sale is also considered in determining the electrical energy output capacity of the affected facility.

(31) [Reserved]

(32) *Replacement unit* means an emissions unit for which all the criteria listed in paragraphs (b)(32)(i) through (iv) of this section are met. No creditable emission reductions shall be generated from shutting down the existing emissions unit that is replaced.

(i) The emissions unit is a reconstructed unit within the meaning of § 60.15(b)(1) of this chapter, or the emissions unit completely takes the place of an existing emissions unit.

(ii) The emissions unit is identical to or functionally equivalent to the replaced emissions unit.

(iii) The replacement does not change the basic design parameter(s) (as discussed in paragraph (y)(2) of this section) of the process unit.

(iv) The replaced emissions unit is permanently removed from the major stationary source, otherwise permanently disabled, or permanently barred from operation by a permit that is enforceable as a practical matter. If the replaced emissions unit is brought back into operation, it shall constitute a new emissions unit.

(33) *Clean coal technology* means any technology, including technologies applied at the precombustion, combustion, or post combustion stage, at a new or existing facility which will achieve significant reductions in air emissions of sulfur dioxide or oxides of nitrogen associated with the utilization of coal in the generation of electricity, or process steam which was not in widespread use as of November 15, 1990.

(34) *Clean coal technology demonstration project* means a project using funds appropriated under the heading ''Department of Energy—Clean Coal Technology'', up to a total amount of $2,500,000,000 for commercial demonstration of clean coal technology, or similar projects funded through appropriations for the Environmental Protection Agency. The Federal contribution for a qualifying project shall be at least 20 percent of the total cost of the demonstration project.

(35) *Temporary clean coal technology demonstration project* means a clean coal technology demonstration project that is operated for a period of 5 years or less, and which complies with the State implementation plan for the State in which the project is located and other requirements necessary to attain and maintain the national ambient air quality standards during and after the project is terminated.

(36)(i) *Repowering* means replacement of an existing coal-fired boiler with one of the following clean coal technologies: atmospheric or pressurized fluidized bed combustion, integrated gasification combined cycle, magnetohydrodynamics, direct and indirect coal-fired turbines, integrated gasification fuel cells, or as determined by the Administrator, in consultation with the Secretary of Energy, a derivative of one or more of these technologies, and any other technology capable of controlling multiple combustion emissions simultaneously with improved boiler or generation efficiency and with significantly greater waste reduction relative to the performance of technology in widespread commercial use as of November 15, 1990.

(ii) Repowering shall also include any oil and/or gas-fired unit which has been awarded clean coal technology demonstration funding as of January 1, 1991, by the Department of Energy.

(iii) The reviewing authority shall give expedited consideration to permit applications for any source that satisfies the requirements of this subsection and is granted an extension under section 409 of the Clean Air Act.

(37) *Reactivation of a very clean coal-fired electric utility steam generating unit* means any physical change or change in the method of operation associated with the commencement of commercial operations by a coal-fired utility unit

after a period of discontinued operation where the unit:

(i) Has not been in operation for the two-year period prior to the enactment of the Clean Air Act Amendments of 1990, and the emissions from such unit continue to be carried in the permitting authority's emissions inventory at the time of enactment;

(ii) Was equipped prior to shutdown with a continuous system of emissions control that achieves a removal efficiency for sulfur dioxide of no less than 85 percent and a removal efficiency for particulates of no less than 98 percent;

(iii) Is equipped with low-NO_X burners prior to the time of commencement of operations following reactivation; and

(iv) Is otherwise in compliance with the requirements of the Clean Air Act.

(38) *Pollution prevention* means any activity that through process changes, product reformulation or redesign, or substitution of less polluting raw materials, eliminates or reduces the release of air pollutants (including fugitive emissions) and other pollutants to the environment prior to recycling, treatment, or disposal; it does not mean recycling (other than certain ''in-process recycling'' practices), energy recovery, treatment, or disposal.

(39) *Significant emissions increase* means, for a regulated NSR pollutant, an increase in emissions that is significant (as defined in paragraph (b)(23) of this section) for that pollutant.

(40)(i) *Projected actual emissions* means the maximum annual rate, in tons per year, at which an existing emissions unit is projected to emit a regulated NSR pollutant in any one of the 5 years (12-month period) following the date the unit resumes regular operation after the project, or in any one of the 10 years following that date, if the project involves increasing the emissions unit's design capacity or its potential to emit that regulated NSR pollutant, and full utilization of the unit would result in a significant emissions increase, or a significant net emissions increase at the major stationary source.

(ii) In determining the projected actual emissions under paragraph (b)(40)(i) of this section (before beginning actual construction), the owner or operator of the major stationary source:

(*a*) Shall consider all relevant information, including but not limited to, historical operational data, the company's own representations, the company's expected business activity and the company's highest projections of business activity, the company's filings with the State or Federal regulatory authorities, and compliance plans under the approved plan; and

(*b*) Shall include fugitive emissions to the extent quantifiable, and emissions associated with startups, shutdowns, and malfunctions; and

(*c*) Shall exclude, in calculating any increase in emissions that results from the particular project, that portion of the unit's emissions following the project that an existing unit could have accommodated during the consecutive 24-month period used to establish the baseline actual emissions under paragraph (b)(47) of this section and that are also unrelated to the particular project, including any increased utilization due to product demand growth; or,

(*d*) In lieu of using the method set out in paragraphs (b)(40)(ii)(*a*) through (*c*) of this section, may elect to use the emissions unit's potential to emit, in tons per year, as defined under paragraph (b)(4) of this section.

(41) [Reserved]

(42) *Prevention of Significant Deterioration Program (PSD) program* means a major source preconstruction permit program that has been approved by the Administrator and incorporated into the plan to implement the requirements of this section, or the program in §52.21 of this chapter. Any permit issued under such a program is a major NSR permit.

(43) *Continuous emissions monitoring system (CEMS)* means all of the equipment that may be required to meet the data acquisition and availability requirements of this section, to sample, condition (if applicable), analyze, and provide a record of emissions on a continuous basis.

(44) *Predictive emissions monitoring system (PEMS)* means all of the equipment necessary to monitor process and control device operational parameters (for example, control device secondary

voltages and electric currents) and other information (for example, gas flow rate, O^2 or CO^2 concentrations), and calculate and record the mass emissions rate (for example, lb/hr) on a continuous basis.

(45) *Continuous parameter monitoring system (CPMS)* means all of the equipment necessary to meet the data acquisition and availability requirements of this section, to monitor process and control device operational parameters (for example, control device secondary voltages and electric currents) and other information (for example, gas flow rate, O^2 or CO^2 concentrations), and to record average operational parameter value(s) on a continuous basis.

(46) *Continuous emissions rate monitoring system (CERMS)* means the total equipment required for the determination and recording of the pollutant mass emissions rate (in terms of mass per unit of time).

(47) *Baseline actual emissions* means the rate of emissions, in tons per year, of a regulated NSR pollutant, as determined in accordance with paragraphs (b)(47)(i) through (iv) of this section.

(i) For any existing electric utility steam generating unit, baseline actual emissions means the average rate, in tons per year, at which the unit actually emitted the pollutant during any consecutive 24-month period selected by the owner or operator within the 5-year period immediately preceding when the owner or operator begins actual construction of the project. The reviewing authority shall allow the use of a different time period upon a determination that it is more representative of normal source operation.

(*a*) The average rate shall include fugitive emissions to the extent quantifiable, and emissions associated with startups, shutdowns, and malfunctions.

(*b*) The average rate shall be adjusted downward to exclude any non-compliant emissions that occurred while the source was operating above an emission limitation that was legally enforceable during the consecutive 24-month period.

(*c*) For a regulated NSR pollutant, when a project involves multiple emissions units, only one consecutive 24-month period must be used to determine the baseline actual emissions for the emissions units being changed. A different consecutive 24-month period can be used For each regulated NSR pollutant.

(*d*) The average rate shall not be based on any consecutive 24-month period for which there is inadequate information for determining annual emissions, in tons per year, and for adjusting this amount if required by paragraph (b)(47)(i)(*b*) of this section.

(ii) For an existing emissions unit (other than an electric utility steam generating unit), baseline actual emissions means the average rate, in tons per year, at which the emissions unit actually emitted the pollutant during any consecutive 24-month period selected by the owner or operator within the 10-year period immediately preceding either the date the owner or operator begins actual construction of the project, or the date a complete permit application is received by the reviewing authority for a permit required either under this section or under a plan approved by the Administrator, whichever is earlier, except that the 10-year period shall not include any period earlier than November 15, 1990.

(*a*) The average rate shall include fugitive emissions to the extent quantifiable, and emissions associated with startups, shutdowns, and malfunctions.

(*b*) The average rate shall be adjusted downward to exclude any non-compliant emissions that occurred while the source was operating above an emission limitation that was legally enforceable during the consecutive 24-month period.

(*c*) The average rate shall be adjusted downward to exclude any emissions that would have exceeded an emission limitation with which the major stationary source must currently comply, had such major stationary source been required to comply with such limitations during the consecutive 24-month period. However, if an emission limitation is part of a maximum achievable control technology standard that the Administrator proposed or promulgated under part 63 of this chapter, the baseline actual emissions need only be adjusted if the State has taken credit

for such emissions reductions in an attainment demonstration or maintenance plan consistent with the requirements of §51.165(a)(3)(ii)(G).

(*d*) For a regulated NSR pollutant, when a project involves multiple emissions units, only one consecutive 24-month period must be used to determine the baseline actual emissions for the emissions units being changed. A different consecutive 24-month period can be used For each regulated NSR pollutant.

(*e*) The average rate shall not be based on any consecutive 24-month period for which there is inadequate information for determining annual emissions, in tons per year, and for adjusting this amount if required by paragraphs (b)(47)(ii)(b) and (c) of this section.

(iii) For a new emissions unit, the baseline actual emissions for purposes of determining the emissions increase that will result from the initial construction and operation of such unit shall equal zero; and thereafter, for all other purposes, shall equal the unit's potential to emit.

(iv) For a PAL for a stationary source, the baseline actual emissions shall be calculated for existing electric utility steam generating units in accordance with the procedures contained in paragraph (b)(47)(i) of this section, for other existing emissions units in accordance with the procedures contained in paragraph (b)(47)(ii) of this section, and for a new emissions unit in accordance with the procedures contained in paragraph (b)(47)(iii) of this section.

(48) *Subject to regulation* means, for any air pollutant, that the pollutant is subject to either a provision in the Clean Air Act, or a nationally-applicable regulation codified by the Administrator in subchapter C of this chapter, that requires actual control of the quantity of emissions of that pollutant, and that such a control requirement has taken effect and is operative to control, limit or restrict the quantity of emissions of that pollutant released from the regulated activity. Except that:

(i) *Greenhouse gases (GHGs),* the air pollutant defined in §86.1818–12(a) of this chapter as the aggregate group of six greenhouse gases: Carbon dioxide, nitrous oxide, methane, hydrofluorocarbons, perfluorocarbons, and sulfur hexafluoride, shall not be subject to regulation except as provided in paragraphs (b)(48)(iv) through (v) of this section.

(ii) For purposes of paragraphs (b)(48)(iii) through (v) of this section, the term tpy CO_2 *equivalent emissions* (CO_2e) shall represent an amount of GHGs emitted, and shall be computed as follows:

(a) Multiplying the mass amount of emissions (tpy), for each of the six greenhouse gases in the pollutant GHGs, by the gas's associated global warming potential published at Table A–1 to subpart A of part 98 of this chapter—Global Warming Potentials. For purposes of this paragraph (b)(48)(ii)(a), prior to July 21, 2014, the mass of the greenhouse gas carbon dioxide shall not include carbon dioxide emissions resulting from the combustion or decomposition of non-fossilized and biodegradable organic material originating from plants, animals, or microorganisms (including products, byproducts, residues and waste from agriculture, forestry and related industries as well as the non-fossilized and biodegradable organic fractions of industrial and municipal wastes, including gases and liquids recovered from the decomposition of non-fossilized and biodegradable organic material).

(*b*) Sum the resultant value from paragraph (b)(48)(ii)(*a*) of this section for each gas to compute a tpy CO_2e.

(iii) The term *emissions increase* as used in paragraphs (b)(48)(iv) through (v) of this section shall mean that both a significant emissions increase (as calculated using the procedures in (a)(7)(iv) of this section) and a significant net emissions increase (as defined in paragraphs (b)(3) and (b)(23) of this section) occur. For the pollutant GHGs, an emissions increase shall be based on tpy CO_2e, and shall be calculated assuming the pollutant GHGs is a regulated NSR pollutant, and ''significant'' is defined as 75,000 tpy CO_2e instead of applying the value in paragraph (b)(23)(ii) of this section.

(iv) Beginning January 2, 2011, the pollutant GHGs is subject to regulation if:

(*a*) The stationary source is a new major stationary source for a regulated NSR pollutant that is not GHGs, and also will emit or will have the potential to emit 75,000 tpy CO_2e or more; or

(*b*) The stationary source is an existing major stationary source for a regulated NSR pollutant that is not GHGs, and also will have an emissions increase of a regulated NSR pollutant, and an emissions increase of 75,000 tpy CO_2e or more; and,

(v) Beginning July 1, 2011, in addition to the provisions in paragraph (b)(48)(iv) of this section, the pollutant GHGs shall also be subject to regulation:

(*a*) At a new stationary source that will emit or have the potential to emit 100,000 tpy CO_2e; or

(*b*) At an existing stationary source that emits or has the potential to emit 100,000 tpy CO_2e, when such stationary source undertakes a physical change or change in the method of operation that will result in an emissions increase of 75,000 tpy CO_2e or more.

(49) *Regulated NSR pollutant*, for purposes of this section, means the following:

(i) Any pollutant for which a national ambient air quality standard has been promulgated. This includes, but is not limited to, the following:

(*a*) $PM_{2.5}$ emissions and PM_{10} emissions shall include gaseous emissions from a source or activity which condense to form particulate matter at ambient temperatures. On or after January 1, 2011, such condensable particulate matter shall be accounted for in applicability determinations and in establishing emissions limitations for $PM_{2.5}$ and PM_{10} in PSD permits. Compliance with emissions limitations for $PM_{2.5}$ and PM_{10} issued prior to this date shall not be based on condensable particulate matter unless required by the terms and conditions of the permit or the applicable implementation plan. Applicability determinations made prior to this date without accounting for condensable particulate matter shall not be considered in violation of this section unless the applicable implementation plan required condensable particulate matter to be included;

(*b*) Any pollutant identified under this paragraph (b)(49)(i)(*b*) as a constituent or precursor to a pollutant for which a national ambient air quality standard has been promulgated. Precursors identified by the Administrator for purposes of NSR are the following:

(*1*) Volatile organic compounds and nitrogen oxides are precursors to ozone in all attainment and unclassifiable areas.

(*2*) Sulfur dioxide is a precursor to $PM_{2.5}$ in all attainment and unclassifiable areas.

(*3*) Nitrogen oxides are presumed to be precursors to $PM_{2.5}$ in all attainment and unclassifiable areas, unless the State demonstrates to the Administrator's satisfaction or EPA demonstrates that emissions of nitrogen oxides from sources in a specific area are not a significant contributor to that area's ambient $PM_{2.5}$ concentrations.

(*4*) Volatile organic compounds are presumed not to be precursors to $PM_{2.5}$ in any attainment or unclassifiable area, unless the State demonstrates to the Administrator's satisfaction or EPA demonstrates that emissions of volatile organic compounds from sources in a specific area are a significant contributor to that area's ambient $PM_{2.5}$ concentrations.

(ii) Any pollutant that is subject to any standard promulgated under section 111 of the Act;

(iii) Any Class I or II substance subject to a standard promulgated under or established by title VI of the Act;

(iv) Any pollutant that otherwise is subject to regulation under the Act as defined in paragraph (b)(48) of this section.

(v) Notwithstanding paragraphs (b)(49)(i) through (iv) of this section, the term *regulated NSR pollutant* shall not include any or all hazardous air pollutants either listed in section 112 of the Act, or added to the list pursuant to section 112(b)(2) of the Act, and which have not been delisted pursuant to section 112(b)(3) of the Act, unless the listed hazardous air pollutant is also regulated as a constituent or precursor of a general pollutant listed under section 108 of the Act.

(50) *Reviewing authority* means the State air pollution control agency,

local agency, other State agency, Indian tribe, or other agency authorized by the Administrator to carry out a permit program under §51.165 and this section, or the Administrator in the case of EPA-implemented permit programs under §52.21 of this chapter.

(51) *Project* means a physical change in, or change in method of operation of, an existing major stationary source.

(52) *Lowest achievable emission rate (LAER)* is as defined in §51.165(a)(1)(xiii).

(53)(i) In general, *process unit* means any collection of structures and/or equipment that processes, assembles, applies, blends, or otherwise uses material inputs to produce or store an intermediate or a completed product. A single stationary source may contain more than one process unit, and a process unit may contain more than one emissions unit.

(ii) Pollution control equipment is not part of the process unit, unless it serves a dual function as both process and control equipment. Administrative and warehousing facilities are not part of the process unit.

(iii) For replacement cost purposes, components shared between two or more process units are proportionately allocated based on capacity.

(iv) The following list identifies the process units at specific categories of stationary sources.

(*a*) For a steam electric generating facility, the process unit consists of those portions of the plant that contribute directly to the production of electricity. For example, at a pulverized coal-fired facility, the process unit would generally be the combination of those systems from the coal receiving equipment through the emission stack (excluding post-combustion pollution controls), including the coal handling equipment, pulverizers or coal crushers, feedwater heaters, ash handling, boiler, burners, turbine-generator set, condenser, cooling tower, water treatment system, air preheaters, and operating control systems. Each separate generating unit is a separate process unit.

(*b*) For a petroleum refinery, there are several categories of process units: those that separate and/or distill petroleum feedstocks; those that change molecular structures; petroleum treating processes; auxiliary facilities, such as steam generators and hydrogen production units; and those that load, unload, blend or store intermediate or completed products.

(*c*) For an incinerator, the process unit would consist of components from the feed pit or refuse pit to the stack, including conveyors, combustion devices, heat exchangers and steam generators, quench tanks, and fans.

NOTE TO PARAGRAPH (b)(53): By a court order on December 24, 2003, this paragraph (b)(53) is stayed indefinitely. The stayed provisions will become effective immediately if the court terminates the stay. At that time, EPA will publish a document in the FEDERAL REGISTER advising the public of the termination of the stay.

(54) *Functionally equivalent component* means a component that serves the same purpose as the replaced component.

NOTE TO PARAGRAPH (b)(54): By a court order on December 24, 2003, this paragraph (b)(54) is stayed indefinitely. The stayed provisions will become effective immediately if the court terminates the stay. At that time, EPA will publish a document in the FEDERAL REGISTER advising the public of the termination of the stay.

(55) *Fixed capital cost* means the capital needed to provide all the depreciable components. ''Depreciable components'' refers to all components of fixed capital cost and is calculated by subtracting land and working capital from the total capital investment, as defined in paragraph (b)(56) of this section.

NOTE TO PARAGRAPH (b)(55): By a court order on December 24, 2003, this paragraph (b)(55) is stayed indefinitely. The stayed provisions will become effective immediately if the court terminates the stay. At that time, EPA will publish a document in the FEDERAL REGISTER advising the public of the termination of the stay.

(56) *Total capital investment* means the sum of the following: all costs required to purchase needed process equipment (purchased equipment costs); the costs of labor and materials for installing that equipment (direct installation costs); the costs of site preparation and buildings; other costs such as engineering, construction and field expenses,

fees to contractors, startup and performance tests, and contingencies (indirect installation costs); land for the process equipment; and working capital for the process equipment.

NOTE TO PARAGRAPH (b)(56): By a court order on December 24, 2003, this paragraph (b)(56) is stayed indefinitely. The stayed provisions will become effective immediately if the court terminates the stay. At that time, EPA will publish a document in the FEDERAL REGISTER advising the public of the termination of the stay.

(c) *Ambient air increments and other measures.* (1) The plan shall contain emission limitations and such other measures as may be necessary to assure that in areas designated as Class I, II, or III, increases in pollutant concentrations over the baseline concentration shall be limited to the following:

Pollutant	Maximum allowable increase (micrograms per cubic meter)
Class I Area	
$PM_{2.5}$:	
Annual arithmetic mean	1
24-hr maximum	2
PM_{10}:	
Annual arithmetic mean	4
24-hr maximum	8
Sulfur dioxide:	
Annual arithmetic mean	2
24-hr maximum	5
3-hr maximum	25
Nitrogen dioxide:	
Annual arithmetic mean	2.5
Class II Area	
$PM_{2.5}$:	
Annual arithmetic mean	4
24-hr maximum	9
PM_{10}:	
Annual arithmetic mean	17
24-hr maximum	30
Sulfur dioxide:	
Annual arithmetic mean	20
24-hr maximum	91
3-hr maximum	512
Nitrogen dioxide:	
Annual arithmetic mean	25
Class III Area	
$PM_{2.5}$:	
Annual arithmetic mean	8
24-hr maximum	18
PM_{10}:	
Annual arithmetic mean	34
24-hr maximum	60
Sulfur dioxide:	
Annual arithmetic mean	40
24-hr maximum	182
3-hr maximum	700
Nitrogen dioxide:	
Annual arithmetic mean	50

For any period other than an annual period, the applicable maximum allowable increase may be exceeded during one such period per year at any one location.

(2) Where the State can demonstrate that it has alternative measures in its plan other than maximum allowable increases as defined under paragraph (c)(1) of this section, that satisfy the

requirements in sections 166(c) and 166(d) of the Clean Air Act for a regulated NSR pollutant for which the Administrator has established maximum allowable increases pursuant to section 166(a) of the Act, the requirements for maximum allowable increases for that pollutant under paragraph (c)(1) of this section shall not apply upon approval of the plan by the Administrator. The following regulated NSR pollutants are eligible for such treatment:

(i) Nitrogen dioxide.

(ii) $PM_{2.5}$.

(d) *Ambient air ceilings.* The plan shall provide that no concentration of a pollutant shall exceed:

(1) The concentration permitted under the national secondary ambient air quality standard, or

(2) The concentration permitted under the national primary ambient air quality standard, whichever concentration is lowest for the pollutant for a period of exposure.

(e) *Restrictions on area classifications.* The plan shall provide that—

(1) All of the following areas which were in existence on August 7, 1977, shall be Class I areas and may not be redesignated:

(i) International parks,

(ii) National wilderness areas which exceed 5,000 acres in size,

(iii) National memorial parks which exceed 5,000 acres in size, and

(iv) National parks which exceed 6,000 acres in size.

(2) Areas which were redesignated as Class I under regulations promulgated before August 7, 1977, shall remain Class I, but may be redesignated as provided in this section.

(3) Any other area, unless otherwise specified in the legislation creating such an area, is initially designated Class II, but may be redesignated as provided in this section.

(4) The following areas may be redesignated only as Class I or II:

(i) An area which as of August 7, 1977, exceeded 10,000 acres in size and was a national monument, a national primitive area, a national preserve, a national recreational area, a national wild and scenic river, a national wildlife refuge, a national lakeshore or seashore; and

(ii) A national park or national wilderness area established after August 7, 1977, which exceeds 10,000 acres in size.

(f) *Exclusions from increment consumption.* (1) The plan may provide that the following concentrations shall be excluded in determining compliance with a maximum allowable increase:

(i) Concentrations attributable to the increase in emissions from stationary sources which have converted from the use of petroleum products, natural gas, or both by reason of an order in effect under section 2 (a) and (b) of the Energy Supply and Environmental Coordination Act of 1974 (or any superseding legislation) over the emissions from such sources before the effective date of such an order;

(ii) Concentrations attributable to the increase in emissions from sources which have converted from using natural gas by reason of natural gas curtailment plan in effect pursuant to the Federal Power Act over the emissions from such sources before the effective date of such plan;

(iii) Concentrations of particulate matter attributable to the increase in emissions from construction or other temporary emission-related activities of new or modified sources;

(iv) The increase in concentrations attributable to new sources outside the United States over the concentrations attributable to existing sources which are included in the baseline concentration; and

(v) Concentrations attributable to the temporary increase in emissions of sulfur dioxide, particulate matter, or nitrogen oxides from stationary sources which are affected by plan revisions approved by the Administrator as meeting the criteria specified in paragraph (f)(4) of this section.

(2) If the plan provides that the concentrations to which paragraph (f)(1) (i) or (ii) of this section, refers shall be excluded, it shall also provide that no exclusion of such concentrations shall apply more than five years after the effective date of the order to which paragraph (f)(1)(i) of this section, refers or the plan to which paragraph (f)(1)(ii) of this section, refers, whichever is applicable. If both such order and plan are applicable, no such exclusion shall

apply more than five years after the later of such effective dates.

(3) [Reserved]

(4) For purposes of excluding concentrations pursuant to paragraph (f)(1)(v) of this section, the Administrator may approve a plan revision that:

(i) Specifies the time over which the temporary emissions increase of sulfur dioxide, particulate matter, or nitrogen oxides would occur. Such time is not to exceed 2 years in duration unless a longer time is approved by the Administrator.

(ii) Specifies that the time period for excluding certain contributions in accordance with paragraph (f)(4)(i) of this section, is not renewable;

(iii) Allows no emissions increase from a stationary source which would:

(*a*) Impact a Class I area or an area where an applicable increment is known to be violated; or

(*b*) Cause or contribute to the violation of a national ambient air quality standard;

(iv) Requires limitations to be in effect the end of the time period specified in accordance with paragraph (f)(4)(i) of this section, which would ensure that the emissions levels from stationary sources affected by the plan revision would not exceed those levels occurring from such sources before the plan revision was approved.

(g) *Redesignation.* (1) The plan shall provide that all areas of the State (except as otherwise provided under paragraph (e) of this section) shall be designated either Class I, Class II, or Class III. Any designation other than Class II shall be subject to the redesignation procedures of this paragraph. Redesignation (except as otherwise precluded by paragraph (e) of this section) may be proposed by the respective States or Indian Governing Bodies, as provided below, subject to approval by the Administrator as a revision to the applicable State implementation plan.

(2) The plan may provide that the State may submit to the Administrator a proposal to redesignate areas of the State Class I or Class II: *Provided,* That:

(i) At least one public hearing has been held in accordance with procedures established in § 51.102.

(ii) Other States, Indian Governing Bodies, and Federal Land Managers whose lands may be affected by the proposed redesignation were notified at least 30 days prior to the public hearing;

(iii) A discussion of the reasons for the proposed redesignation, including a satisfactory description and analysis of the health, environmental, economic, social, and energy effects of the proposed redesignation, was prepared and made available for public inspection at least 30 days prior to the hearing and the notice announcing the hearing contained appropriate notification of the availability of such discussion;

(iv) Prior to the issuance of notice respecting the redesignation of an area that includes any Federal lands, the State has provided written notice to the appropriate Federal Land Manager and afforded adequate opportunity (not in excess of 60 days) to confer with the State respecting the redesignation and to submit written comments and recommendations. In redesignating any area with respect to which any Federal Land Manager had submitted written comments and recommendations, the State shall have published a list of any inconsistency between such redesignation and such comments and recommendations (together with the reasons for making such redesignation against the recommendation of the Federal Land Manager); and

(v) The State has proposed the redesignation after consultation with the elected leadership of local and other substate general purpose governments in the area covered by the proposed redesignation.

(3) The plan may provide that any area other than an area to which paragraph (e) of this section refers may be redesignated as Class III if—

(i) The redesignation would meet the requirements of provisions established in accordance with paragraph (g)(2) of this section;

(ii) The redesignation, except any established by an Indian Governing Body, has been specifically approved by the Governor of the State, after consultation with the appropriate committees of the legislature, if it is in session, or with the leadership of the legislature, if it is not in session (unless State law

provides that such redesignation must be specifically approved by State legislation) and if general purpose units of local government representing a majority of the residents of the area to be redesignated enact legislation (including resolutions where appropriate) concurring in the redesignation;

(iii) The redesignation would not cause, or contribute to, a concentration of any air pollutant which would exceed any maximum allowable increase permitted under the classification of any other area or any national ambient air quality standard; and

(iv) Any permit application for any major stationary source or major modification subject to provisions established in accordance with paragraph (l) of this section which could receive a permit only if the area in question were redesignated as Class III, and any material submitted as part of that application, were available, insofar as was practicable, for public inspection prior to any public hearing on redesignation of any area as Class III.

(4) The plan shall provide that lands within the exterior boundaries of Indian Reservations may be redesignated only by the appropriate Indian Governing Body. The appropriate Indian Governing Body may submit to the Administrator a proposal to redesignate areas Class I, Class II, or Class III: *Provided*, That:

(i) The Indian Governing Body has followed procedures equivalent to those required of a State under paragraphs (g) (2), (3)(iii), and (3)(iv) of this section; and

(ii) Such redesignation is proposed after consultation with the State(s) in which the Indian Reservation is located and which border the Indian Reservation.

(5) The Administrator shall disapprove, within 90 days of submission, a proposed redesignation of any area only if he finds, after notice and opportunity for public hearing, that such redesignation does not meet the procedural requirements of this section or is inconsistent with paragraph (e) of this section. If any such disapproval occurs, the classification of the area shall be that which was in effect prior to the redesignation which was disapproved.

(6) If the Administrator disapproves any proposed area designation, the State or Indian Governing Body, as appropriate, may resubmit the proposal after correcting the deficiencies noted by the Administrator.

(h) *Stack heights*. The plan shall provide, as a minimum, that the degree of emission limitation required for control of any air pollutant under the plan shall not be affected in any manner by—

(1) So much of a stack height, not in existence before December 31, 1970, as exceeds good engineering practice, or

(2) Any other dispersion technique not implemented before then.

(i) *Exemptions*. (1) The plan may provide that requirements equivalent to those contained in paragraphs (j) through (r) of this section do not apply to a particular major stationary source or major modification if:

(i) The major stationary source would be a nonprofit health or nonprofit educational institution or a major modification that would occur at such an institution; or

(ii) The source or modification would be a major stationary source or major modification only if fugitive emissions, to the extent quantifiable, are considered in calculating the potential to emit of the stationary source or modification and such source does not belong to any of the following categories:

(*a*) Coal cleaning plants (with thermal dryers);

(*b*) Kraft pulp mills;

(*c*) Portland cement plants;

(*d*) Primary zinc smelters;

(*e*) Iron and steel mills;

(*f*) Primary aluminum ore reduction plants;

(*g*) Primary copper smelters;

(*h*) Municipal incinerators capable of charging more than 250 tons of refuse per day;

(*i*) Hydrofluoric, sulfuric, or nitric acid plants;

(*j*) Petroleum refineries;

(*k*) Lime plants;

(*l*) Phosphate rock processing plants;

(*m*) Coke oven batteries;

(*n*) Sulfur recovery plants;

(*o*) Carbon black plants (furnace process);

(*p*) Primary lead smelters;

(*q*) Fuel conversion plants;

(*r*) Sintering plants;

(*s*) Secondary metal production plants;

(*t*) Chemical process plants—The term chemical processing plant shall not include ethanol production facilities that produce ethanol by natural fermentation included in NAICS codes 325193 or 312140;

(*u*) Fossil-fuel boilers (or combination thereof) totaling more than 250 million British thermal units per hour heat input;

(*v*) Petroleum storage and transfer units with a total storage capacity exceeding 300,000 barrels;

(*w*) Taconite ore processing plants;

(*x*) Glass fiber processing plants;

(*y*) Charcoal production plants;

(*z*) Fossil fuel-fired steam electric plants of more than 250 million British thermal units per hour heat input;

(*aa*) Any other stationary source category which, as of August 7, 1980, is being regulated under section 111 or 112 of the Act; or

(iii) The source or modification is a portable stationary source which has previously received a permit under requirements equivalent to those contained in paragraphs (j) through (r) of this section, if:

(*a*) The source proposes to relocate and emissions of the source at the new location would be temporary; and

(*b*) The emissions from the source would not exceed its allowable emissions; and

(*c*) The emissions from the source would impact no Class I area and no area where an applicable increment is known to be violated; and

(*d*) Reasonable notice is given to the reviewing authority prior to the relocation identifying the proposed new location and the probable duration of operation at the new location. Such notice shall be given to the reviewing authority not less than 10 days in advance of the proposed relocation unless a different time duration is previously approved by the reviewing authority.

(2) The plan may provide that requirements equivalent to those contained in paragraphs (j) through (r) of this section do not apply to a major stationary source or major modification with respect to a particular pollutant if the owner or operator demonstrates that, as to that pollutant, the source or modification is located in an area designated as nonattainment under section 107 of the Act.

(3) The plan may provide that requirements equivalent to those contained in paragraphs (k), (m), and (o) of this section do not apply to a proposed major stationary source or major modification with respect to a particular pollutant, if the allowable emissions of that pollutant from a new source, or the net emissions increase of that pollutant from a modification, would be temporary and impact no Class I area and no area where an applicable increment is known to be violated.

(4) The plan may provide that requirements equivalent to those contained in paragraphs (k), (m), and (o) of this section as they relate to any maximum allowable increase for a Class II area do not apply to a modification of a major stationary source that was in existence on March 1, 1978, if the net increase in allowable emissions of each a regulated NSR pollutant from the modification after the application of best available control technology would be less than 50 tons per year.

(5) The plan may provide that the reviewing authority may exempt a proposed major stationary source or major modification from the requirements of paragraph (m) of this section, with respect to monitoring for a particular pollutant, if:

(i) The emissions increase of the pollutant from a new stationary source or the net emissions increase of the pollutant from a modification would cause, in any area, air quality impacts less than the following amounts:

(*a*) Carbon monoxide—575 ug/m^3, 8-hour average;

(*b*) Nitrogen dioxide—14 ug/m^3, annual average;

(*c*) $PM_{2.5}$– 0 μg/m^3;

NOTE TO PARAGRAPH (I)(5)(I)(*c*): In accordance with *Sierra Club* v. *EPA*, 706 F.3d 428 (D.C. Cir. 2013), no exemption is available with regard to $PM_{2.5}$.

(*d*) PM_{10}–10 μg/m^3, 24-hour average;

(*e*) Sulfur dioxide—13 ug/m^3, 24-hour average;

(*f*) Ozone;[1]

(*g*) Lead—0.1 μg/m³, 3-month average.

(*h*) Fluorides—0.25 μg/m³, 24-hour average;

(*i*) Total reduced sulfur—10 μg/m³, 1-hour average

(*j*) Hydrogen sulfide—0.2 μg/m³, 1-hour average;

(*k*) Reduced sulfur compounds—10 μg/m³, 1-hour average; or

(ii) The concentrations of the pollutant in the area that the source or modification would affect are less than the concentrations listed in paragraph (i)(5)(i) of this section; or

(iii) The pollutant is not listed in paragraph (i)(5)(i) of this section.

(6) If EPA approves a plan revision under 40 CFR 51.166 as in effect before August 7, 1980, any subsequent revision which meets the requirements of this section may contain transition provisions which parallel the transition provisions of 40 CFR 52.21(i)(9), (i)(10) and (m)(1)(v) as in effect on that date, which provisions relate to requirements for best available control technology and air quality analyses. Any such subsequent revision may not contain any transition provision which in the context of the revision would operate any less stringently than would its counterpart in 40 CFR 52.21.

(7) If EPA approves a plan revision under §51.166 as in effect [before July 31, 1987], any subsequent revision which meets the requirements of this section may contain transition provisions which parallel the transition provisions of §52.21 (i)(11), and (m)(1) (vii) and (viii) of this chapter as in effect on that date, these provisions being related to monitoring requirements for particulate matter. Any such subsequent revision may not contain any transition provision which in the context of the revision would operate any less stringently than would its counterpart in §52.21 of this chapter.

(8) The plan may provide that the permitting requirements equivalent to those contained in paragraph (k)(1)(ii) of this section do not apply to a stationary source or modification with respect to any maximum allowable increase for nitrogen oxides if the owner or operator of the source or modification submitted an application for a permit under the applicable permit program approved or promulgated under the Act before the provisions embodying the maximum allowable increase took effect as part of the plan and the permitting authority subsequently determined that the application as submitted before that date was complete.

(9) The plan may provide that the permitting requirements equivalent to those contained in paragraph (k)(1)(ii) of this section shall not apply to a stationary source or modification with respect to any maximum allowable increase for PM–10 if (i) the owner or operator of the source or modification submitted an application for a permit under the applicable permit program approved under the Act before the provisions embodying the maximum allowable increases for PM–10 took effect as part of the plan, and (ii) the permitting authority subsequently determined that the application as submitted before that date was complete. Instead, the applicable requirements equivalent to paragraph (k)(1)(ii) shall apply with respect to the maximum allowable increases for TSP as in effect on the date the application was submitted.

(10) The plan may provide that the requirements of paragraph (k)(1) of this section shall not apply to a stationary source or modification with respect to the national ambient air quality standards for $PM_{2.5}$ in effect on March 18, 2013 if:

(i) The reviewing authority has determined a permit application subject to this section to be complete on or before December 14, 2012. Instead, the requirements in paragraph (k)(1) of this section shall apply with respect to the national ambient air quality standards for $PM_{2.5}$ in effect at the time the reviewing authority determined the permit application to be complete; or

(ii) The reviewing authority has first published before March 18, 2013 a public notice of a preliminary determination for the permit application subject to this section. Instead, the requirements

[1] No *de minimis* air quality level is provided for ozone. However, any net emissions increase of 100 tons per year or more of volatile organic compounds or nitrogen oxides subject to PSD would be required to perform an ambient impact analysis, including the gathering of air quality data.

in paragraph (k)(1) of this section shall apply with respect to the national ambient air quality standards for $PM_{2.5}$ in effect at the time of first publication of a public notice on the preliminary determination.

(j) *Control technology review*. The plan shall provide that:

(1) A major stationary source or major modification shall meet each applicable emissions limitation under the State Implementation Plan and each applicable emission standards and standard of performance under 40 CFR parts 60 and 61.

(2) A new major stationary source shall apply best available control technology for each a regulated NSR pollutant that it would have the potential to emit in significant amounts.

(3) A major modification shall apply best available control technology for each a regulated NSR pollutant for which it would be a significant net emissions increase at the source. This requirement applies to each proposed emissions unit at which a net emissions increase in the pollutant would occur as a result of a physical change or change in the method of operation in the unit.

(4) For phased construction projects, the determination of best available control technology shall be reviewed and modified as appropriate at the least reasonable time which occurs no later than 18 months prior to commencement of construction of each independent phase of the project. At such time, the owner or operator of the applicable stationary source may be required to demonstrate the adequacy of any previous determination of best available control technology for the source.

(k) *Source impact analysis*—(1) *Required demonstration*. The plan shall provide that the owner or operator of the proposed source or modification shall demonstrate that allowable emission increases from the proposed source or modification, in conjunction with all other applicable emissions increases or reduction (including secondary emissions), would not cause or contribute to air pollution in violation of:

(i) Any national ambient air quality standard in any air quality control region; or

(ii) Any applicable maximum allowable increase over the baseline concentration in any area.

(2) [Reserved]

(l) *Air quality models*. The plan shall provide for procedures which specify that—

(1) All applications of air quality modeling involved in this subpart shall be based on the applicable models, data bases, and other requirements specified in appendix W of this part (Guideline on Air Quality Models).

(2) Where an air quality model specified in appendix W of this part (Guideline on Air Quality Models) is inappropriate, the model may be modified or another model substituted. Such a modification or substitution of a model may be made on a case-by-case basis or, where appropriate, on a generic basis for a specific State program. Written approval of the Administrator must be obtained for any modification or substitution. In addition, use of a modified or substituted model must be subject to notice and opportunity for public comment under procedures set forth in § 51.102.

(m) *Air quality analysis*—(1) *Preapplication analysis*. (i) The plan shall provide that any application for a permit under regulations approved pursuant to this section shall contain an analysis of ambient air quality in the area that the major stationary source or major modification would affect for each of the following pollutants:

(*a*) For the source, each pollutant that it would have the potential to emit in a significant amount;

(*b*) For the modification, each pollutant for which it would result in a significant net emissions increase.

(ii) The plan shall provide that, with respect to any such pollutant for which no National Ambient Air Quality Standard exists, the analysis shall contain such air quality monitoring data as the reviewing authority determines is necessary to assess ambient air quality for that pollutant in any area that the emissions of that pollutant would affect.

(iii) The plan shall provide that with respect to any such pollutant (other than nonmethane hydrocarbons) for which such a standard does exist, the analysis shall contain continuous air

quality monitoring data gathered for purposes of determining whether emissions of that pollutant would cause or contribute to a violation of the standard or any maxiumum allowable increase.

(iv) The plan shall provide that, in general, the continuous air monitoring data that is required shall have been gathered over a period of one year and shall represent the year preceding receipt of the application, except that, if the reviewing authority determines that a complete and adequate analysis can be accomplished with monitoring data gathered over a period shorter than one year (but not to be less than four months), the data that is required shall have been gathered over at least that shorter period.

(v) The plan may provide that the owner or operator of a proposed major stationary source or major modification of volatile organic compounds who satisfies all conditions of 40 CFR part 51 appendix S, section IV may provide postapproval monitoring data for ozone in lieu of providing preconstruction data as required under paragraph (m)(1) of this section.

(2) *Post-construction monitoring.* The plan shall provide that the owner or operator of a major stationary source or major modification shall, after construction of the stationary source or modification, conduct such ambient monitoring as the reviewing authority determines is necessary to determine the effect emissions from the stationary source or modification may have, or are having, on air quality in any area.

(3) *Operation of monitoring stations.* The plan shall provide that the owner or operator of a major stationary source or major modification shall meet the requirements of appendix B to part 58 of this chapter during the operation of monitoring stations for purposes of satisfying paragraph (m) of this section.

(n) *Source information.* (1) The plan shall provide that the owner or operator of a proposed source or modification shall submit all information necessary to perform any analysis or make any determination required under procedures established in accordance with this section.

(2) The plan may provide that such information shall include:

(i) A description of the nature, location, design capacity, and typical operating schedule of the source or modification, including specifications and drawings showing its design and plant layout;

(ii) A detailed schedule for construction of the source or modification;

(iii) A detailed description as to what system of continuous emission reduction is planned by the source or modification, emission estimates, and any other information as necessary to determine that best available control technology as applicable would be applied;

(3) The plan shall provide that upon request of the State, the owner or operator shall also provide information on:

(i) The air quality impact of the source or modification, including meteorological and topographical data necessary to estimate such impact; and

(ii) The air quality impacts and the nature and extent of any or all general commercial, residential, industrial, and other growth which has occurred since August 7, 1977, in the area the source or modification would affect.

(o) *Additional impact analyses.* The plan shall provide that—

(1) The owner or operator shall provide an analysis of the impairment to visibility, soils, and vegetation that would occur as a result of the source or modification and general commercial, residential, industrial, and other growth associated with the source or modification. The owner or operator need not provide an analysis of the impact on vegetation having no significant commercial or recreational value.

(2) The owner or operator shall provide an analysis of the air quality impact projected for the area as a result of general commercial, residential, industrial, and other growth associated with the source or modification.

(p) *Sources impacting Federal Class I areas—additional requirements*—(1) *Notice to EPA.* The plan shall provide that the reviewing authority shall transmit to the Administrator a copy of each permit application relating to a major

stationary source or major modification and provide notice to the Administrator of every action related to the consideration of such permit.

(2) *Federal Land Manager*. The Federal Land Manager and the Federal official charged with direct responsibility for management of Class I lands have an affirmative responsibility to protect the air quality related values (including visibility) of any such lands and to consider, in consultation with the Administrator, whether a proposed source or modification would have an adverse impact on such values.

(3) *Denial—impact on air quality related values*. The plan shall provide a mechanism whereby a Federal Land Manager of any such lands may present to the State, after the reviewing authority's preliminary determination required under procedures developed in accordance with paragraph (r) of this section, a demonstration that the emissions from the proposed source or modification would have an adverse impact on the air quality-related values (including visibility) of any Federal mandatory Class I lands, notwithstanding that the change in air quality resulting from emissions from such source or modification would not cause or contribute to concentrations which would exceed the maximum allowable increases for a Class I area. If the State concurs with such demonstration, the reviewing authority shall not issue the permit.

(4) *Class I Variances*. The plan may provide that the owner or operator of a proposed source or modification may demonstrate to the Federal Land Manager that the emissions from such source would have no adverse impact on the air quality related values of such lands (including visibility), notwithstanding that the change in air quality resulting from emissions from such source or modification would cause or contribute to concentrations which would exceed the maximum allowable increases for a Class I area. If the Federal land manager concurs with such demonstration and so certifies to the State, the reviewing authority may: *Provided*, That applicable requirements are otherwise met, issue the permit with such emission limitations as may be necessary to assure that emissions of sulfur dioxide, $PM_{2.5}$, PM_{10}, and nitrogen oxides would not exceed the following maximum allowable increases over minor source baseline concentration for such pollutants:

Pollutant	Maximum allowable increase (micrograms per cubic meter)
$PM_{2.5}$:	
Annual arithmetic mean	4
24-hr maximum	9
PM_{10}:	
Annual arithmetic mean	17
24-hr maximum	30
Sulfur dioxide:	
Annual arithmetic mean	20
24-hr maximum	91
3-hr maximum	325
Nitrogen dioxide:	
Annual arithmetic mean	25

(5) *Sulfur dioxide variance by Governor with Federal Land Manager's concurrence*. The plan may provide that—

(i) The owner or operator of a proposed source or modification which cannot be approved under procedures developed pursuant to paragraph (q)(4) of this section may demonstrate to the Governor that the source or modification cannot be constructed by reason of any maximum allowable increase for sulfur dioxide for periods of twenty-four hours or less applicable to any Class I area and, in the case of Federal mandatory Class I areas, that a variance under this clause would not adversely affect the air quality related

values of the area (including visibility);

(ii) The Governor, after consideration of the Federal Land Manager's recommendation (if any) and subject to his concurrence, may grant, after notice and an opportunity for a public hearing, a variance from such maximum allowable increase; and

(iii) If such variance is granted, the reviewing authority may issue a permit to such source or modification in accordance with provisions developed pursuant to paragraph (q)(7) of this section: *Provided,* That the applicable requirements of the plan are otherwise met.

(6) *Variance by the Governor with the President's concurrence.* The plan may provide that—

(i) The recommendations of the Governor and the Federal Land Manager shall be transferred to the President in any case where the Governor recommends a variance in which the Federal Land Manager does not concur;

(ii) The President may approve the Governor's recommendation if he finds that such variance is in the national interest; and

(iii) If such a variance is approved, the reviewing authority may issue a permit in accordance with provisions developed pursuant to the requirements of paragraph (q)(7) of this section: *Provided,* That the applicable requirements of the plan are otherwise met.

(7) *Emission limitations for Presidential or gubernatorial variance.* The plan shall provide that in the case of a permit issued under procedures developed pursuant to paragraph (q) (5) or (6) of this section, the source or modification shall comply with emission limitations as may be necessary to assure that emissions of sulfur dioxide from the source or modification would not (during any day on which the otherwise applicable maximum allowable increases are exceeded) cause or contribute to concentrations which would exceed the following maximum allowable increases over the baseline concentration and to assure that such emissions would not cause or contribute to concentrations which exceed the otherwise applicable maximum allowable increases for periods of exposure of 24 hours or less for more than 18 days, not necessarily consecutive, during any annual period:

MAXIMUM ALLOWABLE INCREASE

[Micrograms per cubic meter]

Period of exposure	Terrain areas	
	Low	High
24-hr maximum	36	62
3-hr maximum	130	221

(q) *Public participation.* The plan shall provide that—

(1) The reviewing authority shall notify all applicants within a specified time period as to the completeness of the application or any deficiency in the application or information submitted. In the event of such a deficiency, the date of receipt of the application shall be the date on which the reviewing authority received all required information.

(2) Within one year after receipt of a complete application, the reviewing authority shall:

(i) Make a preliminary determination whether construction should be approved, approved with conditions, or disapproved.

(ii) Make available in at least one location in each region in which the proposed source would be constructed a copy of all materials the applicant submitted, a copy of the preliminary determination, and a copy or summary of other materials, if any, considered in making the preliminary determination.

(iii) Notify the public, by advertisement in a newspaper of general circulation in each region in which the proposed source would be constructed, of the application, the preliminary determination, the degree of increment consumption that is expected from the source or modification, and of the opportunity for comment at a public hearing as well as written public comment.

(iv) Send a copy of the notice of public comment to the applicant, the Administrator and to officials and agencies having cognizance over the location where the proposed construction would occur as follows: Any other State or local air pollution control agencies, the chief executives of the

city and county where the source would be located; any comprehensive regional land use planning agency, and any State, Federal Land Manager, or Indian Governing body whose lands may be affected by emissions from the source or modification.

(v) Provide opportunity for a public hearing for interested persons to appear and submit written or oral comments on the air quality impact of the source, alternatives to it, the control technology required, and other appropriate considerations.

(vi) Consider all written comments submitted within a time specified in the notice of public comment and all comments received at any public hearing(s) in making a final decision on the approvability of the application. The reviewing authority shall make all comments available for public inspection in the same locations where the reviewing authority made available preconstruction information relating to the proposed source or modification.

(vii) Make a final determination whether construction should be approved, approved with conditions, or disapproved.

(viii) Notify the applicant in writing of the final determination and make such notification available for public inspection at the same location where the reviewing authority made available preconstruction information and public comments relating to the source.

(r) *Source obligation.* (1) The plan shall include enforceable procedures to provide that approval to construct shall not relieve any owner or operator of the responsibility to comply fully with applicable provisions of the plan and any other requirements under local, State or Federal law.

(2) The plan shall provide that at such time that a particular source or modification becomes a major stationary source or major modification solely by virtue of a relaxation in any enforceable limitation which was established after August 7, 1980, on the capacity of the source or modification otherwise to emit a pollutant, such as a restriction on hours of operation, then the requirements of paragraphs (j) through (s) of this section shall apply to the source or modification as though construction had not yet commenced on the source or modification.

(3)–(5) [Reserved]

(6) Each plan shall provide that, except as otherwise provided in paragraph (r)(6)(vi) of this section, the following specific provisions apply with respect to any regulated NSR pollutant emitted from projects at existing emissions units at a major stationary source (other than projects at a source with a PAL) in circumstances where there is a reasonable possibility, within the meaning of paragraph (r)(6)(vi) of this section, that a project that is not a part of a major modification may result in a significant emissions increase of such pollutant, and the owner or operator elects to use the method specified in paragraphs (b)(40)(ii)(*a*) through (*c*) of this section for calculating projected actual emissions. Deviations from these provisions will be approved only if the State specifically demonstrates that the submitted provisions are more stringent than or at least as stringent in all respects as the corresponding provisions in paragraphs (r)(6)(i) through (vi) of this section.

(i) Before beginning actual construction of the project, the owner or operator shall document and maintain a record of the following information:

(*a*) A description of the project;

(*b*) Identification of the emissions unit(s) whose emissions of a regulated NSR pollutant could be affected by the project; and

(*c*) A description of the applicability test used to determine that the project is not a major modification for any regulated NSR pollutant, including the baseline actual emissions, the projected actual emissions, the amount of emissions excluded under paragraph (b)(40)(ii)(*c*) of this section and an explanation for why such amount was excluded, and any netting calculations, if applicable.

(ii) If the emissions unit is an existing electric utility steam generating unit, before beginning actual construction, the owner or operator shall provide a copy of the information set out in paragraph (r)(6)(i) of this section to the reviewing authority. Nothing in this paragraph (r)(6)(ii) shall be construed to require the owner or operator

of such a unit to obtain any determination from the reviewing authority before beginning actual construction.

(iii) The owner or operator shall monitor the emissions of any regulated NSR pollutant that could increase as a result of the project and that is emitted by any emissions unit identified in paragraph (r)(6)(i)(*b*) of this section; and calculate and maintain a record of the annual emissions, in tons per year on a calendar year basis, for a period of 5 years following resumption of regular operations after the change, or for a period of 10 years following resumption of regular operations after the change if the project increases the design capacity or potential to emit of that regulated NSR pollutant at such emissions unit.

(iv) If the unit is an existing electric utility steam generating unit, the owner or operator shall submit a report to the reviewing authority within 60 days after the end of each year during which records must be generated under paragraph (r)(6)(iii) of this section setting out the unit's annual emissions during the calendar year that preceded submission of the report.

(v) If the unit is an existing unit other than an electric utility steam generating unit, the owner or operator shall submit a report to the reviewing authority if the annual emissions, in tons per year, from the project identified in paragraph (r)(6)(i) of this section, exceed the baseline actual emissions (as documented and maintained pursuant to paragraph (r)(6)(i)(*c*) of this section) by a significant amount (as defined in paragraph (b)(23) of this section) for that regulated NSR pollutant, and if such emissions differ from the preconstruction projection as documented and maintained pursuant to paragraph (r)(6)(i)(*c*) of this section. Such report shall be submitted to the reviewing authority within 60 days after the end of such year. The report shall contain the following:

(*a*) The name, address and telephone number of the major stationary source;

(*b*) The annual emissions as calculated pursuant to paragraph (r)(6)(iii) of this section; and

(*c*) Any other information that the owner or operator wishes to include in the report (e.g., an explanation as to why the emissions differ from the preconstruction projection).

(vi) A ''reasonable possibility'' under paragraph (r)(6) of this section occurs when the owner or operator calculates the project to result in either:

(*a*) A projected actual emissions increase of at least 50 percent of the amount that is a ''significant emissions increase,'' as defined under paragraph (b)(39) of this section (without reference to the amount that is a significant net emissions increase), for the regulated NSR pollutant; or

(*b*) A projected actual emissions increase that, added to the amount of emissions excluded under paragraph (b)(40)(ii)(*c*), sums to at least 50 percent of the amount that is a ''significant emissions increase,'' as defined under paragraph (b)(39) of this section (without reference to the amount that is a significant net emissions increase), for the regulated NSR pollutant. For a project for which a reasonable possibility occurs only within the meaning of paragraph (r)(6)(vi)(*b*) of this section, and not also within the meaning of paragraph (a)(6)(vi)(*a*) of this section, then provisions (a)(6)(ii) through (v) do not apply to the project.

(7) Each plan shall provide that the owner or operator of the source shall make the information required to be documented and maintained pursuant to paragraph (r)(6) of this section available for review upon request for inspection by the reviewing authority or the general public pursuant to the requirements contained in §70.4(b)(3)(viii) of this chapter.

(s) *Innovative control technology.* (1) The plan may provide that an owner or operator of a proposed major stationary source or major modification may request the reviewing authority to approve a system of innovative control technology.

(2) The plan may provide that the reviewing authority may, with the consent of the Governor(s) of other affected State(s), determine that the source or modification may employ a system of innovative control technology, if:

(i) The proposed control system would not cause or contribute to an unreasonable risk to public health, welfare, or safety in its operation or function;

(ii) The owner or operator agrees to achieve a level of continuous emissions reduction equivalent to that which would have been required under paragraph (j)(2) of this section, by a date specified by the reviewing authority. Such date shall not be later than 4 years from the time of startup or 7 years from permit issuance;

(iii) The source or modification would meet the requirements equivalent to those in paragraphs (j) and (k) of this section, based on the emissions rate that the stationary source employing the system of innovative control technology would be required to meet on the date specified by the reviewing authority;

(iv) The source or modification would not before the date specified by the reviewing authority:

(*a*) Cause or contribute to any violation of an applicable national ambient air quality standard; or

(*b*) Impact any area where an applicable increment is known to be violated;

(v) All other applicable requirements including those for public participation have been met.

(vi) The provisions of paragraph (p) of this section (relating to Class I areas) have been satisfied with respect to all periods during the life of the source or modification.

(3) The plan shall provide that the reviewing authority shall withdraw any approval to employ a system of innovative control technology made under this section, if:

(i) The proposed system fails by the specified date to achieve the required continuous emissions reduction rate; or

(ii) The proposed system fails before the specified date so as to contribute to an unreasonable risk to public health, welfare, or safety; or

(iii) The reviewing authority decides at any time that the proposed system is unlikely to achieve the required level of control or to protect the public health, welfare, or safety.

(4) The plan may provide that if a source or modification fails to meet the required level of continuous emissions reduction within the specified time period, or if the approval is withdrawn in accordance with paragraph (s)(3) of this section, the reviewing authority may allow the source or modification up to an additional 3 years to meet the requirement for the application of best available control technology through use of a demonstrated system of control.

(t)–(v) [Reserved]

(w) *Actuals PALs*. The plan shall provide for PALs according to the provisions in paragraphs (w)(1) through (15) of this section.

(1) *Applicability*. (i) The reviewing authority may approve the use of an actuals PAL for any existing major stationary source if the PAL meets the requirements in paragraphs (w)(1) through (15) of this section. The term ''PAL'' shall mean ''actuals PAL'' throughout paragraph (w) of this section.

(ii) Any physical change in or change in the method of operation of a major stationary source that maintains its total source-wide emissions below the PAL level, meets the requirements in paragraphs (w)(1) through (15) of this section, and complies with the PAL permit:

(*a*) Is not a major modification for the PAL pollutant;

(*b*) Does not have to be approved through the plan's major NSR program; and

(*c*) Is not subject to the provisions in paragraph (r)(2) of this section (restrictions on relaxing enforceable emission limitations that the major stationary source used to avoid applicability of the major NSR program).

(iii) Except as provided under paragraph (w)(1)(ii)(c) of this section, a major stationary source shall continue to comply with all applicable Federal or State requirements, emission limitations, and work practice requirements that were established prior to the effective date of the PAL.

(2) *Definitions*. The plan shall use the definitions in paragraphs (w)(2)(i) through (xi) of this section for the purpose of developing and implementing regulations that authorize the use of

actuals PALs consistent with paragraphs (w)(1) through (15) of this section. When a term is not defined in these paragraphs, it shall have the meaning given in paragraph (b) of this section or in the Act.

(i) *Actuals PAL* for a major stationary source means a PAL based on the baseline actual emissions (as defined in paragraph (b)(47) of this section) of all emissions units (as defined in paragraph (b)(7) of this section) at the source, that emit or have the potential to emit the PAL pollutant.

(ii) *Allowable emissions* means ''allowable emissions'' as defined in paragraph (b)(16) of this section, except as this definition is modified according to paragraphs (w)(2)(ii)(*a*) and (*b*) of this section.

(*a*) The allowable emissions for any emissions unit shall be calculated considering any emission limitations that are enforceable as a practical matter on the emissions unit's potential to emit.

(*b*) An emissions unit's potential to emit shall be determined using the definition in paragraph (b)(4) of this section, except that the words ''or enforceable as a practical matter'' should be added after ''federally enforceable.''

(iii) *Small emissions unit* means an emissions unit that emits or has the potential to emit the PAL pollutant in an amount less than the significant level for that PAL pollutant, as defined in paragraph (b)(23) of this section or in the Act, whichever is lower.

(iv) *Major emissions unit* means:

(*a*) Any emissions unit that emits or has the potential to emit 100 tons per year or more of the PAL pollutant in an attainment area; or

(*b*) Any emissions unit that emits or has the potential to emit the PAL pollutant in an amount that is equal to or greater than the major source threshold for the PAL pollutant as defined by the Act for nonattainment areas. For example, in accordance with the definition of major stationary source in section 182(c) of the Act, an emissions unit would be a major emissions unit for VOC if the emissions unit is located in a serious ozone nonattainment area and it emits or has the potential to emit 50 or more tons of VOC per year.

(v) *Plantwide applicability limitation (PAL)* means an emission limitation expressed in tons per year, for a pollutant at a major stationary source, that is enforceable as a practical matter and established source-wide in accordance with paragraphs (w)(1) through (15) of this section.

(vi) *PAL effective date* generally means the date of issuance of the PAL permit. However, the PAL effective date for an increased PAL is the date any emissions unit that is part of the PAL major modification becomes operational and begins to emit the PAL pollutant.

(vii) *PAL effective period* means the period beginning with the PAL effective date and ending 10 years later.

(viii) *PAL major modification* means, notwithstanding paragraphs (b)(2) and (b)(3) of this section (the definitions for major modification and net emissions increase), any physical change in or change in the method of operation of the PAL source that causes it to emit the PAL pollutant at a level equal to or greater than the PAL.

(ix) *PAL permit* means the major NSR permit, the minor NSR permit, or the State operating permit under a program that is approved into the plan, or the title V permit issued by the reviewing authority that establishes a PAL for a major stationary source.

(x) *PAL pollutant* means the pollutant for which a PAL is established at a major stationary source.

(xi) *Significant emissions unit* means an emissions unit that emits or has the potential to emit a PAL pollutant in an amount that is equal to or greater than the significant level (as defined in paragraph (b)(23) of this section or in the Act, whichever is lower) for that PAL pollutant, but less than the amount that would qualify the unit as a major emissions unit as defined in paragraph (w)(2)(iv) of this section.

(3) *Permit application requirements.* As part of a permit application requesting a PAL, the owner or operator of a major stationary source shall submit the following information in paragraphs (w)(3)(i) through (iii) of this section to the reviewing authority for approval.

(i) A list of all emissions units at the source designated as small, significant

or major based on their potential to emit. In addition, the owner or operator of the source shall indicate which, if any, Federal or State applicable requirements, emission limitations, or work practices apply to each unit.

(ii) Calculations of the baseline actual emissions (with supporting documentation). Baseline actual emissions are to include emissions associated not only with operation of the unit, but also emissions associated with startup, shutdown, and malfunction.

(iii) The calculation procedures that the major stationary source owner or operator proposes to use to convert the monitoring system data to monthly emissions and annual emissions based on a 12-month rolling total for each month as required by paragraph (w)(13)(i) of this section.

(4) *General requirements for establishing PALs.* (i) The plan allows the reviewing authority to establish a PAL at a major stationary source, provided that at a minimum, the requirements in paragraphs (w)(4)(i)(a) through (g) of this section are met.

(*a*) The PAL shall impose an annual emission limitation in tons per year, that is enforceable as a practical matter, for the entire major stationary source. For each month during the PAL effective period after the first 12 months of establishing a PAL, the major stationary source owner or operator shall show that the sum of the monthly emissions from each emissions unit under the PAL for the previous 12 consecutive months is less than the PAL (a 12-month average, rolled monthly). For each month during the first 11 months from the PAL effective date, the major stationary source owner or operator shall show that the sum of the preceding monthly emissions from the PAL effective date for each emissions unit under the PAL is less than the PAL.

(*b*) The PAL shall be established in a PAL permit that meets the public participation requirements in paragraph (w)(5) of this section.

(*c*) The PAL permit shall contain all the requirements of paragraph (w)(7) of this section.

(*d*) The PAL shall include fugitive emissions, to the extent quantifiable, from all emissions units that emit or have the potential to emit the PAL pollutant at the major stationary source.

(*e*) Each PAL shall regulate emissions of only one pollutant.

(*f*) Each PAL shall have a PAL effective period of 10 years.

(*g*) The owner or operator of the major stationary source with a PAL shall comply with the monitoring, recordkeeping, and reporting requirements provided in paragraphs (w)(12) through (14) of this section for each emissions unit under the PAL through the PAL effective period.

(ii) At no time (during or after the PAL effective period) are emissions reductions of a PAL pollutant that occur during the PAL effective period creditable as decreases for purposes of offsets under § 51.165(a)(3)(ii) of this chapter unless the level of the PAL is reduced by the amount of such emissions reductions and such reductions would be creditable in the absence of the PAL.

(5) *Public participation requirements for PALs.* PALs for existing major stationary sources shall be established, renewed, or increased, through a procedure that is consistent with §§ 51.160 and 51.161 of this chapter. This includes the requirement that the reviewing authority provide the public with notice of the proposed approval of a PAL permit and at least a 30-day period for submittal of public comment. The reviewing authority must address all material comments before taking final action on the permit.

(6) *Setting the 10-year actuals PAL level.* (i) Except as provided in paragraph (w)(6)(ii) of this section, the plan shall provide that the actuals PAL level for a major stationary source shall be established as the sum of the baseline actual emissions (as defined in paragraph (b)(47) of this section) of the PAL pollutant for each emissions unit at the source; plus an amount equal to the applicable significant level for the PAL pollutant under paragraph (b)(23) of this section or under the Act, whichever is lower. When establishing the actuals PAL level, for a PAL pollutant, only one consecutive 24-month period must be used to determine the baseline

actual emissions for all existing emissions units. However, a different consecutive 24-month period may be used for each different PAL pollutant. Emissions associated with units that were permanently shut down after this 24-month period must be subtracted from the PAL level. The reviewing authority shall specify a reduced PAL level(s) (in tons/yr) in the PAL permit to become effective on the future compliance date(s) of any applicable Federal or State regulatory requirement(s) that the reviewing authority is aware of prior to issuance of the PAL permit. For instance, if the source owner or operator will be required to reduce emissions from industrial boilers in half from baseline emissions of 60 ppm NO_X to a new rule limit of 30 ppm, then the permit shall contain a future effective PAL level that is equal to the current PAL level reduced by half of the original baseline emissions of such unit(s).

(ii) For newly constructed units (which do not include modifications to existing units) on which actual construction began after the 24-month period, in lieu of adding the baseline actual emissions as specified in paragraph (w)(6)(i) of this section, the emissions must be added to the PAL level in an amount equal to the potential to emit of the units.

(7) *Contents of the PAL permit.* The plan shall require that the PAL permit contain, at a minimum, the information in paragraphs (w)(7)(i) through (x) of this section.

(i) The PAL pollutant and the applicable source-wide emission limitation in tons per year.

(ii) The PAL permit effective date and the expiration date of the PAL (PAL effective period).

(iii) Specification in the PAL permit that if a major stationary source owner or operator applies to renew a PAL in accordance with paragraph (w)(10) of this section before the end of the PAL effective period, then the PAL shall not expire at the end of the PAL effective period. It shall remain in effect until a revised PAL permit is issued by the reviewing authority.

(iv) A requirement that emission calculations for compliance purposes include emissions from startups, shutdowns and malfunctions.

(v) A requirement that, once the PAL expires, the major stationary source is subject to the requirements of paragraph (w)(9) of this section.

(vi) The calculation procedures that the major stationary source owner or operator shall use to convert the monitoring system data to monthly emissions and annual emissions based on a 12-month rolling total for each month as required by paragraph (w)(3)(i) of this section.

(vii) A requirement that the major stationary source owner or operator monitor all emissions units in accordance with the provisions under paragraph (w)(13) of this section.

(viii) A requirement to retain the records required under paragraph (w)(13) of this section on site. Such records may be retained in an electronic format.

(ix) A requirement to submit the reports required under paragraph (w)(14) of this section by the required deadlines.

(x) Any other requirements that the reviewing authority deems necessary to implement and enforce the PAL.

(8) *PAL effective period and reopening of the PAL permit.* The plan shall require the information in paragraphs (w)(8)(i) and (ii) of this section.

(i) *PAL effective period.* The reviewing authority shall specify a PAL effective period of 10 years.

(ii) *Reopening of the PAL permit.* (*a*) During the PAL effective period, the plan shall require the reviewing authority to reopen the PAL permit to:

(*1*) Correct typographical/calculation errors made in setting the PAL or reflect a more accurate determination of emissions used to establish the PAL;

(*2*) Reduce the PAL if the owner or operator of the major stationary source creates creditable emissions reductions for use as offsets under §51.165(a)(3)(ii) of this chapter; and

(*3*) Revise the PAL to reflect an increase in the PAL as provided under paragraph (w)(11) of this section.

(*b*) The plan shall provide the reviewing authority discretion to reopen the PAL permit for the following:

(*1*) Reduce the PAL to reflect newly applicable Federal requirements (for example, NSPS) with compliance dates after the PAL effective date;

(*2*) Reduce the PAL consistent with any other requirement, that is enforceable as a practical matter, and that the State may impose on the major stationary source under the plan; and

(*3*) Reduce the PAL if the reviewing authority determines that a reduction is necessary to avoid causing or contributing to a NAAQS or PSD increment violation, or to an adverse impact on an AQRV that has been identified for a Federal Class I area by a Federal Land Manager and for which information is available to the general public.

(*c*) Except for the permit reopening in paragraph (w)(8)(ii)(*a*)(*1*) of this section for the correction of typographical/calculation errors that do not increase the PAL level, all reopenings shall be carried out in accordance with the public participation requirements of paragraph (w)(5) of this section.

(9) *Expiration of a PAL.* Any PAL that is not renewed in accordance with the procedures in paragraph (w)(10) of this section shall expire at the end of the PAL effective period, and the requirements in paragraphs (w)(9)(i) through (v) of this section shall apply.

(i) Each emissions unit (or each group of emissions units) that existed under the PAL shall comply with an allowable emission limitation under a revised permit established according to the procedures in paragraphs (w)(9)(i)(*a*) and (*b*) of this section.

(*a*) Within the time frame specified for PAL renewals in paragraph (w)(10)(ii) of this section, the major stationary source shall submit a proposed allowable emission limitation for each emissions unit (or each group of emissions units, if such a distribution is more appropriate as decided by the reviewing authority) by distributing the PAL allowable emissions for the major stationary source among each of the emissions units that existed under the PAL. If the PAL had not yet been adjusted for an applicable requirement that became effective during the PAL effective period, as required under paragraph (w)(10)(v) of this section, such distribution shall be made as if the PAL had been adjusted.

(*b*) The reviewing authority shall decide whether and how the PAL allowable emissions will be distributed and issue a revised permit incorporating allowable limits for each emissions unit, or each group of emissions units, as the reviewing authority determines is appropriate.

(ii) Each emissions unit(s) shall comply with the allowable emission limitation on a 12-month rolling basis. The reviewing authority may approve the use of monitoring systems (source testing,emission factors, etc.) other than CEMS, CERMS, PEMS or CPMS to demonstrate compliance with the allowable emission limitation.

(iii) Until the reviewing authority issues the revised permit incorporating allowable limits for each emissions unit, or each group of emissions units, as required under paragraph (w)(9)(i)(*b*) of this section, the source shall continue to comply with a source-wide, multi-unit emissions cap equivalent to the level of the PAL emission limitation.

(iv) Any physical change or change in the method of operation at the major stationary source will be subject to major NSR requirements if such change meets the definition of major modification in paragraph (b)(2) of this section.

(v) The major stationary source owner or operator shall continue to comply with any State or Federal applicable requirements (BACT, RACT, NSPS, etc.) that may have applied either during the PAL effective period or prior to the PAL effective period except for those emission limitations that had been established pursuant to paragraph (r)(2) of this section, but were eliminated by the PAL in accordance with the provisions in paragraph (w)(1)(ii)(c) of this section.

(10) *Renewal of a PAL.* (i) The reviewing authority shall follow the procedures specified in paragraph (w)(5) of this section in approving any request to renew a PAL for a major stationary source, and shall provide both the proposed PAL level and a written rationale for the proposed PAL level to the public for review and comment. During such public review, any person may propose a PAL level for the source for consideration by the reviewing authority.

(ii) *Application deadline.* The plan shall require that a major stationary

source owner or operator shall submit a timely application to the reviewing authority to request renewal of a PAL. A timely application is one that is submitted at least 6 months prior to, but not earlier than 18 months from, the date of permit expiration. This deadline for application submittal is to ensure that the permit will not expire before the permit is renewed. If the owner or operator of a major stationary source submits a complete application to renew the PAL within this time period, then the PAL shall continue to be effective until the revised permit with the renewed PAL is issued.

(iii) *Application requirements.* The application to renew a PAL permit shall contain the information required in paragraphs (w)(10)(iii) (*a*) through (*d*) of this section.

(*a*) The information required in paragraphs (w)(3)(i) through (iii) of this section.

(*b*) A proposed PAL level.

(*c*) The sum of the potential to emit of all emissions units under the PAL (with supporting documentation).

(*d*) Any other information the owner or operator wishes the reviewing authority to consider in determining the appropriate level for renewing the PAL.

(iv) *PAL adjustment.* In determining whether and how to adjust the PAL, the reviewing authority shall consider the options outlined in paragraphs (w)(10)(iv) (*a*) and (*b*) of this section. However, in no case may any such adjustment fail to comply with paragraph (w)(10)(iv)(*c*) of this section.

(*a*) If the emissions level calculated in accordance with paragraph (w)(6) of this section is equal to or greater than 80 percent of the PAL level, the reviewing authority may renew the PAL at the same level without considering the factors set forth in paragraph (w)(10)(iv)(*b*) of this section; or

(*b*) The reviewing authority may set the PAL at a level that it determines to be more representative of the source's baseline actual emissions, or that it determines to be appropriate considering air quality needs, advances in control technology, anticipated economic growth in the area, desire to reward or encourage the source's voluntary emissions reductions, or other factors as specifically identified by the reviewing authority in its written rationale.

(*c*) Notwithstanding paragraphs (w)(10)(iv) (*a*) and (*b*) of this section:

(*1*) If the potential to emit of the major stationary source is less than the PAL, the reviewing authority shall adjust the PAL to a level no greater than the potential to emit of the source; and

(*2*) The reviewing authority shall not approve a renewed PAL level higher than the current PAL, unless the major stationary source has complied with the provisions of paragraph (w)(11) of this section (increasing a PAL).

(v) If the compliance date for a State or Federal requirement that applies to the PAL source occurs during the PAL effective period, and if the reviewing authority has not already adjusted for such requirement, the PAL shall be adjusted at the time of PAL permit renewal or title V permit renewal, whichever occurs first.

(11) *Increasing a PAL during the PAL effective period.* (i) The plan shall require that the reviewing authority may increase a PAL emission limitation only if the major stationary source complies with the provisions in paragraphs (w)(11)(i) (*a*) through (*d*) of this section.

(*a*) The owner or operator of the major stationary source shall submit a complete application to request an increase in the PAL limit for a PAL major modification. Such application shall identify the emissions unit(s) contributing to the increase in emissions so as to cause the major stationary source's emissions to equal or exceed its PAL.

(*b*) As part of this application, the major stationary source owner or operator shall demonstrate that the sum of the baseline actual emissions of the small emissions units, plus the sum of the baseline actual emissions of the significant and major emissions units assuming application of BACT equivalent controls, plus the sum of the allowable emissions of the new or modified emissions unit(s), exceeds the PAL. The level of control that would result from BACT equivalent controls on each significant or major emissions unit shall be determined by conducting

a new BACT analysis at the time the application is submitted, unless the emissions unit is currently required to comply with a BACT or LAER requirement that was established within the preceding 10 years. In such a case, the assumed control level for that emissions unit shall be equal to the level of BACT or LAER with which that emissions unit must currently comply.

(*c*) The owner or operator obtains a major NSR permit for all emissions unit(s) identified in paragraph (w)(11)(i)(*a*) of this section, regardless of the magnitude of the emissions increase resulting from them (that is, no significant levels apply). These emissions unit(s) shall comply with any emissions requirements resulting from the major NSR process (for example, BACT), even though they have also become subject to the PAL or continue to be subject to the PAL.

(*d*) The PAL permit shall require that the increased PAL level shall be effective on the day any emissions unit that is part of the PAL major modification becomes operational and begins to emit the PAL pollutant.

(ii) The reviewing authority shall calculate the new PAL as the sum of the allowable emissions for each modified or new emissions unit, plus the sum of the baseline actual emissions of the significant and major emissions units (assuming application of BACT equivalent controls as determined in accordance with paragraph (w)(11)(i)(*b*) of this section), plus the sum of the baseline actual emissions of the small emissions units.

(iii) The PAL permit shall be revised to reflect the increased PAL level pursuant to the public notice requirements of paragraph (w)(5) of this section.

(12) *Monitoring requirements for PALs*—(i) *General requirements.* (*a*) Each PAL permit must contain enforceable requirements for the monitoring system that accurately determines plantwide emissions of the PAL pollutant in terms of mass per unit of time. Any monitoring system authorized for use in the PAL permit must be based on sound science and meet generally acceptable scientific procedures for data quality and manipulation. Additionally, the information generated by such system must meet minimum legal requirements for admissibility in a judicial proceeding to enforce the PAL permit.

(*b*) The PAL monitoring system must employ one or more of the four general monitoring approaches meeting the minimum requirements set forth in paragraphs (w)(12)(ii) (*a*) through (*d*) of this section and must be approved by the reviewing authority.

(*c*) Notwithstanding paragraph (w)(12)(i)(*b*) of this section, you may also employ an alternative monitoring approach that meets paragraph (w)(12)(i)(*a*) of this section if approved by the reviewing authority.

(*d*) Failure to use a monitoring system that meets the requirements of this section renders the PAL invalid.

(ii) Minimum performance requirements for approved monitoring approaches. The following are acceptable general monitoring approaches when conducted in accordance with the minimum requirements in paragraphs (w)(12)(iii) through (ix) of this section:

(*a*) Mass balance calculations for activities using coatings or solvents;

(*b*) CEMS;

(*c*) CPMS or PEMS; and

(*d*) Emission factors.

(iii) Mass balance calculations. An owner or operator using mass balance calculations to monitor PAL pollutant emissions from activities using coating or solvents shall meet the following requirements:

(*a*) Provide a demonstrated means of validating the published content of the PAL pollutant that is contained in or created by all materials used in or at the emissions unit;

(*b*) Assume that the emissions unit emits all of the PAL pollutant that is contained in or created by any raw material or fuel used in or at the emissions unit, if it cannot otherwise be accounted for in the process; and

(*c*) Where the vendor of a material or fuel, which is used in or at the emissions unit, publishes a range of pollutant content from such material, the owner or operator must use the highest value of the range to calculate the PAL pollutant emissions unless the reviewing authority determines there is site-

specific data or a site-specific monitoring program to support another content within the range.

(iv) CEMS. An owner or operator using CEMS to monitor PAL pollutant emissions shall meet the following requirements:

(*a*) CEMS must comply with applicable Performance Specifications found in 40 CFR part 60, appendix B; and

(*b*) CEMS must sample, analyze, and record data at least every 15 minutes while the emissions unit is operating.

(v) CPMS or PEMS. An owner or operator using CPMS or PEMS to monitor PAL pollutant emissions shall meet the following requirements:

(*a*) The CPMS or the PEMS must be based on current site-specific data demonstrating a correlation between the monitored parameter(s) and the PAL pollutant emissions across the range of operation of the emissions unit; and

(*b*) Each CPMS or PEMS must sample, analyze, and record data at least every 15 minutes, or at another less frequent interval approved by the reviewing authority, while the emissions unit is operating.

(vi) Emission factors. An owner or operator using emission factors to monitor PAL pollutant emissions shall meet the following requirements:

(*a*) All emission factors shall be adjusted, if appropriate, to account for the degree of uncertainty or limitations in the factors' development;

(*b*) The emissions unit shall operate within the designated range of use for the emission factor, if applicable; and

(*c*) If technically practicable, the owner or operator of a significant emissions unit that relies on an emission factor to calculate PAL pollutant emissions shall conduct validation testing to determine a site-specific emission factor within 6 months of PAL permit issuance, unless the reviewing authority determines that testing is not required.

(vii) A source owner or operator must record and report maximum potential emissions without considering enforceable emission limitations or operational restrictions for an emissions unit during any period of time that there is no monitoring data, unless another method for determining emissions during such periods is specified in the PAL permit.

(viii) Notwithstanding the requirements in paragraphs (w)(12)(iii) through (vii) of this section, where an owner or operator of an emissions unit cannot demonstrate a correlation between the monitored parameter(s) and the PAL pollutant emissions rate at all operating points of the emissions unit, the reviewing authority shall, at the time of permit issuance:

(*a*) Establish default value(s) for determining compliance with the PAL based on the highest potential emissions reasonably estimated at such operating point(s); or

(*b*) Determine that operation of the emissions unit during operating conditions when there is no correlation between monitored parameter(s) and the PAL pollutant emissions is a violation of the PAL.

(ix) Re-validation. All data used to establish the PAL pollutant must be re-validated through performance testing or other scientifically valid means approved by the reviewing authority. Such testing must occur at least once every 5 years after issuance of the PAL.

(13) *Recordkeeping requirements.* (i) The PAL permit shall require an owner or operator to retain a copy of all records necessary to determine compliance with any requirement of paragraph (w) of this section and of the PAL, including a determination of each emissions unit's 12-month rolling total emissions, for 5 years from the date of such record.

(ii) The PAL permit shall require an owner or operator to retain a copy of the following records, for the duration of the PAL effective period plus 5 years:

(*a*) A copy of the PAL permit application and any applications for revisions to the PAL; and

(*b*) Each annual certification of compliance pursuant to title V and the data relied on in certifying the compliance.

(14) *Reporting and notification requirements.* The owner or operator shall submit semi-annual monitoring reports and prompt deviation reports to the reviewing authority in accordance with the applicable title V operating permit

program. The reports shall meet the requirements in paragraphs (w)(14)(i) through (iii) of this section.

(i) *Semi-annual report.* The semi-annual report shall be submitted to the reviewing authority within 30 days of the end of each reporting period. This report shall contain the information required in paragraphs (w)(14)(i)(*a*) through (*g*) of this section.

(*a*) The identification of owner and operator and the permit number.

(*b*) Total annual emissions (tons/year) based on a 12-month rolling total for each month in the reporting period recorded pursuant to paragraph (w)(13)(i) of this section.

(*c*) All data relied upon, including, but not limited to, any Quality Assurance or Quality Control data, in calculating the monthly and annual PAL pollutant emissions.

(*d*) A list of any emissions units modified or added to the major stationary source during the preceding 6-month period.

(*e*) The number, duration, and cause of any deviations or monitoring malfunctions (other than the time associated with zero and span calibration checks), and any corrective action taken.

(*f*) A notification of a shutdown of any monitoring system, whether the shutdown was permanent or temporary, the reason for the shutdown, the anticipated date that the monitoring system will be fully operational or replaced with another monitoring system, and whether the emissions unit monitored by the monitoring system continued to operate, and the calculation of the emissions of the pollutant or the number determined by method included in the permit, as provided by paragraph (w)(12)(vii) of this section.

(*g*) A signed statement by the responsible official (as defined by the applicable title V operating permit program) certifying the truth, accuracy, and completeness of the information provided in the report.

(ii) *Deviation report.* The major stationary source owner or operator shall promptly submit reports of any deviations or exceedance of the PAL requirements, including periods where no monitoring is available. A report submitted pursuant to § 70.6(a)(3)(iii)(B) of this chapter shall satisfy this reporting requirement. The deviation reports shall be submitted within the time limits prescribed by the applicable program implementing § 70.6(a)(3)(iii)(B) of this chapter. The reports shall contain the following information:

(*a*) The identification of owner and operator and the permit number;

(*b*) The PAL requirement that experienced the deviation or that was exceeded;

(*c*) Emissions resulting from the deviation or the exceedance; and

(*d*) A signed statement by the responsible official (as defined by the applicable title V operating permit program) certifying the truth, accuracy, and completeness of the information provided in the report.

(iii) Re-validation results. The owner or operator shall submit to the reviewing authority the results of any re-validation test or method within three months after completion of such test or method.

(15) *Transition requirements.* (i) No reviewing authority may issue a PAL that does not comply with the requirements in paragraphs (w)(1) through (15) of this section after the Administrator has approved regulations incorporating these requirements into a plan.

(ii) The reviewing authority may supersede any PAL which was established prior to the date of approval of the plan by the Administrator with a PAL that complies with the requirements of paragraphs (w)(1) through (15) of this section.

(x) If any provision of this section, or the application of such provision to any person or circumstance, is held invalid, the remainder of this section, or the application of such provision to persons or circumstances other than those as to which it is held invalid, shall not be affected thereby.

(y) *Equipment replacement provision.* Without regard to other considerations, routine maintenance, repair and replacement includes, but is not limited to, the replacement of any component of a process unit with an identical or functionally equivalent component(s), and maintenance and repair activities that are part of the replacement activity, provided that all of

the requirements in paragraphs (y)(1) through (3) of this section are met.

(1) *Capital Cost threshold for Equipment Replacement.* (i) For an *electric utility steam generating unit,* as defined in §51.166(b)(30), the fixed capital cost of the replacement component(s) plus the cost of any associated maintenance and repair activities that are part of the replacement shall not exceed 20 percent of the replacement value of the process unit, at the time the equipment is replaced. For a process unit that is not an electric utility steam generating unit the fixed capital cost of the replacement component(s) plus the cost of any associated maintenance and repair activities that are part of the replacement shall not exceed 20 percent of the replacement value of the process unit, at the time the equipment is replaced.

(ii) In determining the replacement value of the process unit; and, except as otherwise allowed under paragraph (y)(1)(iii) of this section, the owner or operator shall determine the replacement value of the process unit on an estimate of the fixed capital cost of constructing a new process unit, or on the current appraised value of the process unit.

(iii) As an alternative to paragraph (y)(1)(ii) of this section for determining the replacement value of a process unit, an owner or operator may choose to use insurance value (where the insurance value covers only complete replacement), investment value adjusted for inflation, or another accounting procedure if such procedure is based on Generally Accepted Accounting Principles, provided that the owner or operator sends a notice to the reviewing authority. The first time that an owner or operator submits such a notice for a particular process unit, the notice may be submitted at any time, but any subsequent notice for that process unit may be submitted only at the beginning of the process unit's fiscal year. Unless the owner or operator submits a notice to the reviewing authority, then paragraph (y)(1)(ii) of this section will be used to establish the replacement value of the process unit. Once the owner or operator submits a notice to use an alternative accounting procedure, the owner or operator must continue to use that procedure for the entire fiscal year for that process unit. In subsequent fiscal years, the owner or operator must continue to use this selected procedure unless and until the owner or operator sends another notice to the reviewing authority selecting another procedure consistent with this paragraph or paragraph (y)(1)(ii) of this section at the beginning of such fiscal year.

(2) *Basic design parameters.* The replacement does not change the basic design parameter(s) of the process unit to which the activity pertains.

(i) Except as provided in paragraph (y)(2)(iii) of this section, for a process unit at a steam electric generating facility, the owner or operator may select as its basic design parameters either maximum hourly heat input and maximum hourly fuel consumption rate or maximum hourly electric output rate and maximum steam flow rate. When establishing fuel consumption specifications in terms of weight or volume, the minimum fuel quality based on British Thermal Units content shall be used for determining the basic design parameter(s) for a coal-fired electric utility steam generating unit.

(ii) Except as provided in paragraph (y)(2)(iii) of this section, the basic design parameter(s) for any process unit that is not at a steam electric generating facility are maximum rate of fuel or heat input, maximum rate of material input, or maximum rate of product output. Combustion process units will typically use maximum rate of fuel input. For sources having multiple end products and raw materials, the owner or operator should consider the primary product or primary raw material when selecting a basic design parameter.

(iii) If the owner or operator believes the basic design parameter(s) in paragraphs (y)(2)(i) and (ii) of this section is not appropriate for a specific industry or type of process unit, the owner or operator may propose to the reviewing authority an alternative basic design parameter(s) for the source's process unit(s). If the reviewing authority approves of the use of an alternative basic design parameter(s), the reviewing authority shall issue a permit that

is legally enforceable that records such basic design parameter(s) and requires the owner or operator to comply with such parameter(s).

(iv) The owner or operator shall use credible information, such as results of historic maximum capability tests, design information from the manufacturer, or engineering calculations, in establishing the magnitude of the basic design parameter(s) specified in paragraphs (y)(2)(i) and (ii) of this section.

(v) If design information is not available for a process unit, then the owner or operator shall determine the process unit's basic design parameter(s) using the maximum value achieved by the process unit in the five-year period immediately preceding the planned activity.

(vi) Efficiency of a process unit is not a basic design parameter.

(3) The replacement activity shall not cause the process unit to exceed any emission limitation, or operational limitation that has the effect of constraining emissions, that applies to the process unit and that is legally enforceable.

NOTE TO PARAGRAPH (y): By a court order on December 24, 2003, this paragraph (y) is stayed indefinitely. The stayed provisions will become effective immediately if the court terminates the stay. At that time, EPA will publish a document in the FEDERAL REGISTER advising the public of the termination of the stay.

(Secs. 101(b)(1), 110, 160–169, 171–178, and 301(a), Clean Air Act, as amended (42 U.S.C. 7401(b)(1), 7410, 7470–7479, 7501–7508, and 7601(a)); sec. 129(a), Clean Air Act Amendments of 1977 (Pub. L. 95–95, 91 Stat. 685 (Aug. 7, 1977)))

[43 FR 26382, June 19, 1978]

EDITORIAL NOTE: For FEDERAL REGISTER citations affecting § 51.166, see the List of CFR Sections Affected, which appears in the Finding Aids section of the printed volume and at *www.fdsys.gov*.

EFFECTIVE DATE NOTE: At 76 FR 17553, Mar. 30, 2011, § 51.166 paragraphs (b)(2)(v) and (b)(3)(iii)*(d)* are stayed indefinitely.

Subpart J—Ambient Air Quality Surveillance

AUTHORITY: Secs. 110, 301(a), 313, 319, Clean Air Act (42 U.S.C. 7410, 7601(a), 7613, 7619).

§ 51.190 Ambient air quality monitoring requirements.

The requirements for monitoring ambient air quality for purposes of the plan are located in subpart C of part 58 of this chapter.

[44 FR 27569, May 10, 1979]

Subpart K—Source Surveillance

SOURCE: 51 FR 40673, Nov. 7, 1986, unless otherwise noted.

§ 51.210 General.

Each plan must provide for monitoring the status of compliance with any rules and regulations that set forth any portion of the control strategy. Specifically, the plan must meet the requirements of this subpart.

§ 51.211 Emission reports and recordkeeping.

The plan must provide for legally enforceable procedures for requiring owners or operators of stationary sources to maintain records of and periodically report to the State—

(a) Information on the nature and amount of emissions from the stationary sources; and

(b) Other information as may be necessary to enable the State to determine whether the sources are in compliance with applicable portions of the control strategy.

§ 51.212 Testing, inspection, enforcement, and complaints.

The plan must provide for—

(a) Periodic testing and inspection of stationary sources; and

(b) Establishment of a system for detecting violations of any rules and regulations through the enforcement of appropriate visible emission limitations and for investigating complaints.

(c) Enforceable test methods for each emission limit specified in the plan. For the purpose of submitting compliance certifications or establishing whether or not a person has violated or is in violation of any standard in this part, the plan must not preclude the use, including the exclusive use, of any credible evidence or information, relevant to whether a source would have

been in compliance with applicable requirements if the appropriate performance or compliance test or procedure had been performed. As an enforceable method, States may use:

(1) Any of the appropriate methods in appendix M to this part, Recommended Test Methods for State Implementation Plans; or

(2) An alternative method following review and approval of that method by the Administrator; or

(3) Any appropriate method in appendix A to 40 CFR part 60.

[51 FR 40673, Nov. 7, 1986, as amended at 55 FR 14249, Apr. 17, 1990; 62 FR 8328, Feb. 24, 1997]

§ 51.213 Transportation control measures.

(a) The plan must contain procedures for obtaining and maintaining data on actual emissions reductions achieved as a result of implementing transportation control measures.

(b) In the case of measures based on traffic flow changes or reductions in vehicle use, the data must include observed changes in vehicle miles traveled and average speeds.

(c) The data must be maintained in such a way as to facilitate comparison of the planned and actual efficacy of the transportation control measures.

[61 FR 30163, June 14, 1996]

§ 51.214 Continuous emission monitoring.

(a) The plan must contain legally enforceable procedures to—

(1) Require stationary sources subject to emission standards as part of an applicable plan to install, calibrate, maintain, and operate equipment for continuously monitoring and recording emissions; and

(2) Provide other information as specified in appendix P of this part.

(b) The procedures must—

(1) Identify the types of sources, by source category and capacity, that must install the equipment; and

(2) Identify for each source category the pollutants which must be monitored.

(c) The procedures must, as a minimum, require the types of sources set forth in appendix P of this part to meet the applicable requirements set forth therein.

(d)(1) The procedures must contain provisions that require the owner or operator of each source subject to continuous emission monitoring and recording requirements to maintain a file of all pertinent information for at least two years following the date of collection of that information.

(2) The information must include emission measurements, continuous monitoring system performance testing measurements, performance evaluations, calibration checks, and adjustments and maintenance performed on such monitoring systems and other reports and records required by appendix P of this part.

(e) The procedures must require the source owner or operator to submit information relating to emissions and operation of the emission monitors to the State to the extent described in appendix P at least as frequently as described therein.

(f)(1) The procedures must provide that sources subject to the requirements of paragraph (c) of this section must have installed all necessary equipment and shall have begun monitoring and recording within 18 months after either—

(i) The approval of a State plan requiring monitoring for that source; or

(ii) Promulgation by the Agency of monitoring requirements for that source.

(2) The State may grant reasonable extensions of this period to sources that—

(i) Have made good faith efforts to purchases, install, and begin the monitoring and recording of emission data; and

(ii) Have been unable to complete the installation within the period.

Subpart L—Legal Authority

SOURCE: 51 FR 40673, Nov. 7, 1986, unless otherwise noted.

§ 51.230 Requirements for all plans.

Each plan must show that the State has legal authority to carry out the plan, including authority to:

(a) Adopt emission standards and limitations and any other measures

necessary for attainment and maintenance of national standards.

(b) Enforce applicable laws, regulations, and standards, and seek injunctive relief.

(c) Abate pollutant emissions on an emergency basis to prevent substantial endangerment to the health of persons, i.e., authority comparable to that available to the Administrator under section 305 of the Act.

(d) Prevent construction, modification, or operation of a facility, building, structure, or installation, or combination thereof, which directly or indirectly results or may result in emissions of any air pollutant at any location which will prevent the attainment or maintenance of a national standard.

(e) Obtain information necessary to determine whether air pollution sources are in compliance with applicable laws, regulations, and standards, including authority to require recordkeeping and to make inspections and conduct tests of air pollution sources.

(f) Require owners or operators of stationary sources to install, maintain, and use emission monitoring devices and to make periodic reports to the State on the nature and amounts of emissions from such stationary sources; also authority for the State to make such data available to the public as reported and as correlated with any applicable emission standards or limitations.

§ 51.231 Identification of legal authority.

(a) The provisions of law or regulation which the State determines provide the authorities required under this section must be specifically identified, and copies of such laws or regulations be submitted with the plan.

(b) The plan must show that the legal authorities specified in this subpart are available to the State at the time of submission of the plan.

(c) Legal authority adequate to fulfill the requirements of § 51.230 (e) and (f) of this subpart may be delegated to the State under section 114 of the Act.

§ 51.232 Assignment of legal authority to local agencies.

(a) A State government agency other than the State air pollution control agency may be assigned responsibility for carrying out a portion of a plan if the plan demonstrates to the Administrator's satisfaction that the State governmental agency has the legal authority necessary to carry out the portion of plan.

(b) The State may authorize a local agency to carry out a plan, or portion thereof, within such local agency's jurisdiction if—

(1) The plan demonstrates to the Administrator's satisfaction that the local agency has the legal authority necessary to implement the plan or portion of it; and

(2) This authorization does not relieve the State of responsibility under the Act for carrying out such plan, or portion thereof.

Subpart M—Intergovernmental Consultation

AUTHORITY: Secs. 110, 121, 174(a), 301(a), Clean Air Act, as amended (42 U.S.C. 7410, 7421, 7504, and 7601(a)).

SOURCE: 44 FR 35179, June 18, 1979, unless otherwise noted.

AGENCY DESIGNATION

§ 51.240 General plan requirements.

Each State implementation plan must identify organizations, by official title, that will participate in developing, implementing, and enforcing the plan and the responsibilities of such organizations. The plan shall include any related agreements or memoranda of understanding among the organizations.

§ 51.241 Nonattainment areas for carbon monoxide and ozone.

(a) For each AQCR or portion of an AQCR in which the national primary standard for carbon monoxide or ozone will not be attained by July 1, 1979, the Governor (or Governors for interstate areas) shall certify, after consultation with local officials, the organization responsible for developing the revised implementation plan or portions thereof for such AQCR.

(b)–(f) [Reserved]

[44 FR 35179, June 18, 1979, as amended at 48 FR 29302, June 24, 1983; 60 FR 33922, June 29, 1995; 61 FR 16060, Apr. 11, 1996]

§ 51.242 [Reserved]

Subpart N—Compliance Schedules

SOURCE: 51 FR 40673, Nov. 7, 1986, unless otherwise noted.

§ 51.260 Legally enforceable compliance schedules.

(a) Each plan shall contain legally enforceable compliance schedules setting forth the dates by which all stationary and mobile sources or categories of such sources must be in compliance with any applicable requirement of the plan.

(b) The compliance schedules must contain increments of progress required by § 51.262 of this subpart.

§ 51.261 Final compliance schedules.

(a) Unless EPA grants an extension under subpart R, compliance schedules designed to provide for attainment of a primary standard must—

(1) Provide for compliance with the applicable plan requirements as soon as practicable; or

(2) Provide for compliance no later than the date specified for attainment of the primary standard under;

(b) Unless EPA grants an extension under subpart R, compliance schedules designed to provide for attainment of a secondary standard must—

(1) Provide for compliance with the applicable plan requirements in a reasonable time; or

(2) Provide for compliance no later than the date specified for the attainment of the secondary standard under § 51.110(c).

§ 51.262 Extension beyond one year.

(a) Any compliance schedule or revision of it extending over a period of more than one year from the date of its adoption by the State agency must provide for legally enforceable increments of progress toward compliance by each affected source or category of sources. The increments of progress must include—

(1) Each increment of progress specified in § 51.100(q); and

(2) Additional increments of progress as may be necessary to permit close and effective supervision of progress toward timely compliance.

(b) [Reserved]

Subpart O—Miscellaneous Plan Content Requirements

AUTHORITY: Secs. 110, 301(a), 313, 319, Clean Air Act (42 U.S.C. 7410, 7601(a), 7613, 7619).

§ 51.280 Resources.

Each plan must include a description of the resources available to the State and local agencies at the date of submission of the plan and of any additional resources needed to carry out the plan during the 5-year period following its submission. The description must include projections of the extent to which resources will be acquired at 1-, 3-, and 5-year intervals.

[51 FR 40674, Nov. 7, 1986]

§ 51.281 Copies of rules and regulations.

Emission limitations and other measures necessary for attainment and maintenance of any national standard, including any measures necessary to implement the requirements of subpart L must be adopted as rules and regulations enforceable by the State agency. Copies of all such rules and regulations must be submitted with the plan. Submittal of a plan setting forth proposed rules and regulations will not satisfy the requirements of this section nor will it be considered a timely submittal.

[51 FR 40674, Nov. 7, 1986]

§ 51.285 Public notification.

By March 1, 1980, the State shall submit a plan revision that contains provisions for:

(a) Notifying the public on a regular basis of instances or areas in which any primary standard was exceeded during any portion of the preceding calendar year,

(b) Advising the public of the health hazards associated with such an exceedance of a primary standard, and

(c) Increasing public awareness of:

(1) Measures which can be taken to prevent a primary standard from being exceeded, and

(2) Ways in which the public can participate in regulatory and other efforts to improve air quality.

[44 FR 27569, May 10, 1979]

§ 51.286 Electronic reporting.

States that wish to receive electronic documents must revise the State Implementation Plan to satisfy the requirements of 40 CFR Part 3—(Electronic reporting).

[70 FR 59887, Oct. 13, 2005]

Subpart P—Protection of Visibility

AUTHORITY: Secs. 110, 114, 121, 160–169, 169A, and 301 of the Clean Air Act, (42 U.S.C. 7410, 7414, 7421, 7470–7479, and 7601).

SOURCE: 45 FR 80089, Dec. 2, 1980, unless otherwise noted.

§ 51.300 Purpose and applicability.

(a) *Purpose*. The primary purposes of this subpart are to require States to develop programs to assure reasonable progress toward meeting the national goal of preventing any future, and remedying any existing, impairment of visibility in mandatory Class I Federal areas which impairment results from manmade air pollution; and to establish necessary additional procedures for new source permit applicants, States and Federal Land Managers to use in conducting the visibility impact analysis required for new sources under § 51.166. This subpart sets forth requirements addressing visibility impairment in its two principal forms: ''reasonably attributable'' impairment (*i.e.*, impairment attributable to a single source/small group of sources) and regional haze (*i.e.*, widespread haze from a multitude of sources which impairs visibility in every direction over a large area).

(b) *Applicability*—(1) *General Applicability*. The provisions of this subpart pertaining to implementation plan requirements for assuring reasonable progress in preventing any future and remedying any existing visibility impairment are applicable to:

(i) Each State which has a mandatory Class I Federal area identified in part 81, subpart D, of this title, and (ii) each State in which there is any source the emissions from which may reasonably be anticipated to cause or contribute to any impairment of visibility in any such area.

(2) The provisions of this subpart pertaining to implementation plans to address reasonably attributable visibility impairment are applicable to the following States:

Alabama, Alaska, Arizona, Arkansas, California, Colorado, Florida, Georgia, Hawaii, Idaho, Kentucky, Louisiana, Maine, Michigan, Minnesota, Missouri, Montana, Nevada, New Hampshire, New Jersey, New Mexico, North Carolina, North Dakota, Oklahoma, Oregon, South Carolina, South Dakota, Tennessee, Texas, Utah, Vermont, Virginia, Virgin Islands, Washington, West Virginia, Wyoming.

(3) The provisions of this subpart pertaining to implementation plans to address regional haze visibility impairment are applicable to all States as defined in section 302(d) of the Clean Air Act (CAA) except Guam, Puerto Rico, American Samoa, and the Northern Mariana Islands.

[45 FR 80089, Dec. 2, 1980, as amended at 64 FR 35763, July 1, 1999]

§ 51.301 Definitions.

For purposes of this subpart:

Adverse impact on visibility means, for purposes of section 307, visibility impairment which interferes with the management, protection, preservation, or enjoyment of the visitor's visual experience of the Federal Class I area. This determination must be made on a case-by-case basis taking into account the geographic extent, intensity, duration, frequency and time of visibility impairments, and how these factors correlate with (1) times of visitor use of the Federal Class I area, and (2) the frequency and timing of natural conditions that reduce visibility. This term does not include effects on integral vistas.

Agency means the U.S. Environmental Protection Agency.

BART-eligible source means an *existing stationary facility* as defined in this section.

Best Available Retrofit Technology (BART) means an emission limitation based on the degree of reduction

achievable through the application of the best system of continuous emission reduction for each pollutant which is emitted by an existing stationary facility. The emission limitation must be established, on a case-by-case basis, taking into consideration the technology available, the costs of compliance, the energy and nonair quality environmental impacts of compliance, any pollution control equipment in use or in existence at the source, the remaining useful life of the source, and the degree of improvement in visibility which may reasonably be anticipated to result from the use of such technology.

Building, structure, or facility means all of the pollutant-emitting activities which belong to the same industrial grouping, are located on one or more contiguous or adjacent properties, and are under the control of the same person (or persons under common control). Pollutant-emitting activities must be considered as part of the same industrial grouping if they belong to the same *Major Group* (*i.e.*, which have the same two-digit code) as described in the *Standard Industrial Classification Manual, 1972* as amended by the 1977 Supplement (U.S. Government Printing Office stock numbers 4101–0066 and 003–005–00176–0 respectively).

Deciview means a measurement of visibility impairment. A deciview is a haze index derived from calculated light extinction, such that uniform changes in haziness correspond to uniform incremental changes in perception across the entire range of conditions, from pristine to highly impaired. The deciview haze index is calculated based on the following equation (for the purposes of calculating deciview, the atmospheric light extinction coefficient must be calculated from aerosol measurements):

Deciview haze index=10 $\ln_e$ (b_{ext}/10 Mm^{-1}).

b_{ext}=the atmospheric light extinction coefficient, expressed in inverse megameters (Mm^{-1}).

Existing stationary facility means any of the following stationary sources of air pollutants, including any reconstructed source, which was not in operation prior to August 7, 1962, and was in existence on August 7, 1977, and has the potential to emit 250 tons per year or more of any air pollutant. In determining potential to emit, fugitive emissions, to the extent quantifiable, must be counted.

Fossil-fuel fired steam electric plants of more than 250 million British thermal units per hour heat input,

Coal cleaning plants (thermal dryers),

Kraft pulp mills,

Portland cement plants,

Primary zinc smelters,

Iron and steel mill plants,

Primary aluminum ore reduction plants,

Primary copper smelters,

Municipal incinerators capable of charging more than 250 tons of refuse per day,

Hydrofluoric, sulfuric, and nitric acid plants,

Petroleum refineries,

Lime plants,

Phosphate rock processing plants,

Coke oven batteries,

Sulfur recovery plants,

Carbon black plants (furnace process),

Primary lead smelters,

Fuel conversion plants,

Sintering plants,

Secondary metal production facilities,

Chemical process plants,

Fossil-fuel boilers of more than 250 million British thermal units per hour heat input,

Petroleum storage and transfer facilities with a capacity exceeding 300,000 barrels,

Taconite ore processing facilities,

Glass fiber processing plants, and

Charcoal production facilities.

Federal Class I area means any Federal land that is classified or reclassified *Class I*.

Federal Land Manager means the Secretary of the department with authority over the Federal Class I area (or the Secretary's designee) or, with respect to Roosevelt-Campobello International Park, the Chairman of the Roosevelt-Campobello International Park Commission.

Federally enforceable means all limitations and conditions which are enforceable by the Administrator under

the Clean Air Act including those requirements developed pursuant to parts 60 and 61 of this title, requirements within any applicable State Implementation Plan, and any permit requirements established pursuant to § 52.21 of this chapter or under regulations approved pursuant to part 51, 52, or 60 of this title.

Fixed capital cost means the capital needed to provide all of the depreciable components.

Fugitive Emissions means those emissions which could not reasonably pass through a stack, chimney, vent, or other functionally equivalent opening.

Geographic enhancement for the purpose of § 51.308 means a method, procedure, or process to allow a broad regional strategy, such as an emissions trading program designed to achieve greater reasonable progress than BART for regional haze, to accommodate BART for reasonably attributable impairment.

Implementation plan means, for the purposes of this part, any State Implementation Plan, Federal Implementation Plan, or Tribal Implementation Plan.

Indian tribe or *tribe* means any Indian tribe, band, nation, or other organized group or community, including any Alaska Native village, which is federally recognized as eligible for the special programs and services provided by the United States to Indians because of their status as Indians.

In existence means that the owner or operator has obtained all necessary preconstruction approvals or permits required by Federal, State, or local air pollution emissions and air quality laws or regulations and either has (1) begun, or caused to begin, a continuous program of physical on-site construction of the facility or (2) entered into binding agreements or contractual obligations, which cannot be cancelled or modified without substantial loss to the owner or operator, to undertake a program of construction of the facility to be completed in a reasonable time.

In operation means engaged in activity related to the primary design function of the source.

Installation means an identifiable piece of process equipment.

Integral vista means a view perceived from within the mandatory Class I Federal area of a specific landmark or panorama located outside the boundary of the mandatory Class I Federal area.

Least impaired days means the average visibility impairment (measured in deciviews) for the twenty percent of monitored days in a calendar year with the lowest amount of visibility impairment.

Major stationary source and major modification mean major stationary source and major modification, respectively, as defined in § 51.166.

Mandatory Class I Federal Area means any area identified in part 81, subpart D of this title.

Most impaired days means the average visibility impairment (measured in deciviews) for the twenty percent of monitored days in a calendar year with the highest amount of visibility impairment.

Natural conditions includes naturally occurring phenomena that reduce visibility as measured in terms of light extinction, visual range, contrast, or coloration.

Potential to emit means the maximum capacity of a stationary source to emit a pollutant under its physical and operational design. Any physical or operational limitation on the capacity of the source to emit a pollutant including air pollution control equipment and restrictions on hours of operation or on the type or amount of material combusted, stored, or processed, shall be treated as part of its design if the limitation or the effect it would have on emissions is federally enforceable. Secondary emissions do not count in determining the potential to emit of a stationary source.

Reasonably attributable means attributable by visual observation or any other technique the State deems appropriate.

Reasonably attributable visibility impairment means visibility impairment that is caused by the emission of air pollutants from one, or a small number of sources.

Reconstruction will be presumed to have taken place where the fixed capital cost of the new component exceeds 50 percent of the fixed capital cost of a comparable entirely new source. Any

final decision as to whether reconstruction has occurred must be made in accordance with the provisions of § 60.15 (f) (1) through (3) of this title.

Regional haze means visibility impairment that is caused by the emission of air pollutants from numerous sources located over a wide geographic area. Such sources include, but are not limited to, major and minor stationary sources, mobile sources, and area sources.

Secondary emissions means emissions which occur as a result of the construction or operation of an existing stationary facility but do not come from the existing stationary facility. Secondary emissions may include, but are not limited to, emissions from ships or trains coming to or from the existing stationary facility.

Significant impairment means, for purposes of § 51.303, visibility impairment which, in the judgment of the Administrator, interferes with the management, protection, preservation, or enjoyment of the visitor's visual experience of the mandatory Class I Federal area. This determination must be made on a case-by-case basis taking into account the geographic extent, intensity, duration, frequency and time of the visibility impairment, and how these factors correlate with (1) times of visitor use of the mandatory Class I Federal area, and (2) the frequency and timing of natural conditions that reduce visibility.

State means ''State'' as defined in section 302(d) of the CAA.

Stationary Source means any building, structure, facility, or installation which emits or may emit any air pollutant.

Visibility impairment means any humanly perceptible change in visibility (light extinction, visual range, contrast, coloration) from that which would have existed under natural conditions.

Visibility in any mandatory Class I Federal area includes any integral vista associated with that area.

[45 FR 80089, Dec. 2, 1980, as amended at 64 FR 35763, 35774, July 1, 1999]

§ 51.302 Implementation control strategies for reasonably attributable visibility impairment.

(a) *Plan Revision Procedures.* (1) Each State identified in § 51.300(b)(2) must have submitted, not later than September 2, 1981, an implementation plan meeting the requirements of this subpart pertaining to reasonably attributable visibility impairment.

(2)(i) The State, prior to adoption of any implementation plan to address reasonably attributable visibility impairment required by this subpart, must conduct one or more public hearings on such plan in accordance with § 51.102.

(ii) In addition to the requirements in § 51.102, the State must provide written notification of such hearings to each affected Federal Land Manager, and other affected States, and must state where the public can inspect a summary prepared by the Federal Land Managers of their conclusions and recommendations, if any, on the proposed plan revision.

(3) Submission of plans as required by this subpart must be conducted in accordance with the procedures in § 51.103.

(b) *State and Federal Land Manager Coordination.* (1) The State must identify to the Federal Land Managers, in writing and within 30 days of the date of promulgation of these regulations, the title of the official to which the Federal Land Manager of any mandatory Class I Federal area can submit a recommendation on the implementation of this subpart including, but not limited to:

(i) A list of integral vistas that are to be listed by the State for the purpose of implementing section 304,

(ii) Identification of impairment of visibility in any mandatory Class I Federal area(s), and

(iii) Identification of elements for inclusion in the visibility monitoring strategy required by section 305.

(2) The State must provide opportunity for consultation, in person and at least 60 days prior to holding any public hearing on the plan, with the Federal Land Manager on the proposed SIP revision required by this subpart.

This consultation must include the opportunity for the affected Federal Land Managers to discuss their:

(i) Assessment of impairment of visibility in any mandatory Class I Federal area, and

(ii) Recommendations on the development of the long-term strategy.

(3) The plan must provide procedures for continuing consultation between the State and Federal Land Manager on the implementation of the visibility protection program required by this subpart.

(c) *General plan requirements for reasonably attributable visibility impairment.* (1) The affected Federal Land Manager may certify to the State, at any time, that there exists reasonably attributable impairment of visibility in any mandatory Class I Federal area.

(2) The plan must contain the following to address reasonably attributable impairment:

(i) A long-term (10–15 years) strategy, as specified in § 51.305 and § 51.306, including such emission limitations, schedules of compliance, and such other measures including schedules for the implementation of the elements of the long-term strategy as may be necessary to make reasonable progress toward the national goal specified in § 51.300(a).

(ii) An assessment of visibility impairment and a discussion of how each element of the plan relates to the preventing of future or remedying of existing impairment of visibility in any mandatory Class I Federal area within the State.

(iii) Emission limitations representing BART and schedules for compliance with BART for each existing stationary facility identified according to paragraph (c)(4) of this section.

(3) The plan must require each source to maintain control equipment required by this subpart and establish procedures to ensure such control equipment is properly operated and maintained.

(4) For any existing reasonably attributable visibility impairment the Federal Land Manager certifies to the State under paragraph (c)(1) of this section, at least 6 months prior to plan submission or revision:

(i) The State must identify and analyze for BART each existing stationary facility which may reasonably be anticipated to cause or contribute to impairment of visibility in any mandatory Class I Federal area where the impairment in the mandatory Class I Federal area is reasonably attributable to that existing stationary facility. The State need not consider any integral vista the Federal Land Manager did not identify pursuant to § 51.304(b) at least 6 months before plan submission.

(ii) If the State determines that technologicial or economic limitations on the applicability of measurement methodology to a particular existing stationary facility would make the imposition of an emission standard infeasible it may instead prescribe a design, equipment, work practice, or other operational standard, or combination thereof, to require the application of BART. Such standard, to the degree possible, is to set forth the emission reduction to be achieved by implementation of such design, equipment, work practice or operation, and must provide for compliance by means which achieve equivalent results.

(iii) BART must be determined for fossil-fuel fired generating plants having a total generating capacity in excess of 750 megawatts pursuant to ''Guidelines for Determining Best Available Retrofit Technology for Coal-fired Power Plants and Other Existing Stationary Facilities'' (1980), which is incorporated by reference, exclusive of appendix E to the Guidelines, except that options more stringent than NSPS must be considered. Establishing a BART emission limitation equivalent to the NSPS level of control is not a sufficient basis to avoid the analysis of control options required by the guidelines. This document is EPA publication No. 450/3–80–009b and has been approved for incorporation by reference by the Director of the Federal Register in accordance with 5 U.S.C. 552(a) and 1 CFR part 51. It is for sale from the U.S. Department of Commerce, National Technical Information Service, 5285 Port Royal Road, Springfield, Virginia 22161. It is also available for inspection from the National Archives and Records Administration

(NARA). For information on the availability of this material at NARA, call 202–741–6030, or go to: *http://www.archives.gov/federal_register/index.html.*

(iv) The plan must require that each existing stationary facility required to install and operate BART do so as expeditiously as practicable but in no case later than five years after plan approval.

(v) The plan must provide for a BART analysis of any existing stationary facility that might cause or contribute to impairment of visibility in any mandatory Class I Federal area identified under this paragraph (c)(4) at such times, as determined by the Administrator, as new technology for control of the pollutant becomes reasonably available if:

(A) The pollutant is emitted by that existing stationary facility,

(B) Controls representing BART for the pollutant have not previously been required under this subpart, and

(C) The impairment of visibility in any mandatory Class I Federal area is reasonably attributable to the emissions of that pollutant.

[45 FR 80089, Dec. 2, 1980, as amended at 57 FR 40042, Sept. 1, 1992; 64 FR 35764, 35774, July 1, 1999; 69 FR 18803, Apr. 9, 2004; 70 FR 39156, July 6, 2005]

§ 51.303 Exemptions from control.

(a)(1) Any existing stationary facility subject to the requirement under § 51.302 to install, operate, and maintain BART may apply to the Administrator for an exemption from that requirement.

(2) An application under this section must include all available documentation relevant to the impact of the source's emissions on visibility in any mandatory Class I Federal area and a demonstration by the existing stationary facility that it does not or will not, by itself or in combination with other sources, emit any air pollutant which may be reasonably anticipated to cause or contribute to a significant impairment of visibility in any mandatory Class I Federal area.

(b) Any fossil-fuel fired power plant with a total generating capacity of 750 megawatts or more may receive an exemption from BART only if the owner or operator of such power plant demonstrates to the satisfaction of the Administrator that such power plant is located at such a distance from all mandatory Class I Federal areas that such power plant does not or will not, by itself or in combination with other sources, emit any air pollutant which may reasonably be anticipated to cause or contribute to significant impairment of visibility in any such mandatory Class I Federal area.

(c) Application under this § 51.303 must be accompanied by a written concurrence from the State with regulatory authority over the source.

(d) The existing stationary facility must give prior written notice to all affected Federal Land Managers of any application for exemption under this § 51.303.

(e) The Federal Land Manager may provide an initial recommendation or comment on the disposition of such application. Such recommendation, where provided, must be part of the exemption application. This recommendation is not to be construed as the concurrence required under paragraph (h) of this section.

(f) The Administrator, within 90 days of receipt of an application for exemption from control, will provide notice of receipt of an exemption application and notice of opportunity for public hearing on the application.

(g) After notice and opportunity for public hearing, the Administrator may grant or deny the exemption. For purposes of judicial review, final EPA action on an application for an exemption under this § 51.303 will not occur until EPA approves or disapproves the State Implementation Plan revision.

(h) An exemption granted by the Administrator under this § 51.303 will be effective only upon concurrence by all affected Federal Land Managers with the Administrator's determination.

[45 FR 80089, Dec. 2, 1980, as amended at 64 FR 35774, July 1, 1999]

§ 51.304 Identification of integral vistas.

(a) On or before December 31, 1985 the Federal Land Manager may identify any integral vista. The integral vista must be identified according to criteria the Federal Land Manager develops.

These criteria must include, but are not limited to, whether the integral vista is important to the visitor's visual experience of the mandatory Class I Federal area. Adoption of criteria must be preceded by reasonable notice and opportunity for public comment on the proposed criteria.

(b) The Federal Land Manager must notify the State of any integral vistas identified under paragraph (a) of this section, and the reasons therefor.

(c) The State must list in its implementation plan any integral vista the Federal Land Manager identifies at least six months prior to plan submission, and must list in its implementation plan at its earliest opportunity, and in no case later than at the time of the periodic review of the SIP required by § 51.306(c), any integral vista the Federal Land Manager identifies after that time.

(d) The State need not in its implementation plan list any integral vista the indentification of which was not made in accordance with the criteria in paragraph (a) of this section. In making this finding, the State must carefully consider the expertise of the Federal Land Manager in making the judgments called for by the criteria for identification. Where the State and the Federal Land Manager disagree on the identification of any integral vista, the State must give the Federal Land Manager an opportunity to consult with the Governor of the State.

[45 FR 80089, Dec. 2, 1980, as amended at 64 FR 35774, July 1, 1999]

§ 51.305 Monitoring for reasonably attributable visibility impairment.

(a) For the purposes of addressing reasonably attributable visibility impairment, each State containing a mandatory Class I Federal area must include in the plan a strategy for evaluating reasonably attributable visibility impairment in any mandatory Class I Federal area by visual observation or other appropriate monitoring techniques. Such strategy must take into account current and anticipated visibility monitoring research, the availability of appropriate monitoring techniques, and such guidance as is provided by the Agency.

(b) The plan must provide for the consideration of available visibility data and must provide a mechanism for its use in decisions required by this subpart.

[45 FR 80089, Dec. 2, 1980, as amended at 64 FR 35764, July 1, 1999]

§ 51.306 Long-term strategy requirements for reasonably attributable visibility impairment.

(a)(1) For the purposes of addressing reasonably attributable visibility impairment, each plan must include a long-term (10–15 years) strategy for making reasonable progress toward the national goal specified in § 51.300(a). This strategy must cover any existing impairment the Federal Land Manager certifies to the State at least 6 months prior to plan submission, and any integral vista of which the Federal Land Manager notifies the State at least 6 months prior to plan submission.

(2) A long-term strategy must be developed for each mandatory Class I Federal area located within the State and each mandatory Class I Federal area located outside the State which may be affected by sources within the State. This does not preclude the development of a single comprehensive plan for all such areas.

(3) The plan must set forth with reasonable specificity why the long-term strategy is adequate for making reasonable progress toward the national visibility goal, including remedying existing and preventing future impairment.

(b) The State must coordinate its long-term strategy for an area with existing plans and goals, including those provided by the affected Federal Land Managers, that may affect impairment of visibility in any mandatory Class I Federal area.

(c) The plan must provide for periodic review and revision, as appropriate, of the long-term strategy for addressing reasonably attributable visibility impairment. The plan must provide for such periodic review and revision not less frequently than every 3 years until the date of submission of the State's first plan addressing regional haze visibility impairment in accordance with § 51.308(b) and (c). On

or before this date, the State must revise its plan to provide for review and revision of a coordinated long-term strategy for addressing reasonably attributable and regional haze visibility impairment, and the State must submit the first such coordinated long-term strategy. Future coordinated long-term strategies must be submitted consistent with the schedule for periodic progress reports set forth in § 51.308(g). Until the State revises its plan to meet this requirement, the State must continue to comply with existing requirements for plan review and revision, and with all emission management requirements in the plan to address reasonably attributable impairment. This requirement does not affect any preexisting deadlines for State submittal of a long-term strategy review (or element thereof) between August 30, 1999, and the date required for submission of the State's first regional haze plan. In addition, the plan must provide for review of the long-term strategy as it applies to reasonably attributable impairment, and revision as appropriate, within 3 years of State receipt of any certification of reasonably attributable impairment from a Federal Land Manager. The review process must include consultation with the appropriate Federal Land Managers, and the State must provide a report to the public and the Administrator on progress toward the national goal. This report must include an assessment of:

(1) The progress achieved in remedying existing impairment of visibility in any mandatory Class I Federal area;

(2) The ability of the long-term strategy to prevent future impairment of visibility in any mandatory Class I Federal area;

(3) Any change in visibility since the last such report, or, in the case of the first report, since plan approval;

(4) Additional measures, including the need for SIP revisions, that may be necessary to assure reasonable progress toward the national visibility goal;

(5) The progress achieved in implementing BART and meeting other schedules set forth in the long-term strategy;

(6) The impact of any exemption granted under § 51.303;

(7) The need for BART to remedy existing visibility impairment of any integral vista listed in the plan since the last such report, or, in the case of the first report, since plan approval.

(d) The long-term strategy must provide for review of the impacts from any new major stationary source or major modifications on visibility in any mandatory Class I Federal area. This review of major stationary sources or major modifications must be in accordance with § 51.307, § 51.166, § 51.160, and any other binding guidance provided by the Agency insofar as these provisions pertain to protection of visibility in any mandatory Class I Federal areas.

(e) The State must consider, at a minimum, the following factors during the development of its long-term strategy:

(1) Emission reductions due to ongoing air pollution control programs,

(2) Additional emission limitations and schedules for compliance,

(3) Measures to mitigate the impacts of construction activities,

(4) Source retirement and replacement schedules,

(5) Smoke management techniques for agricultural and forestry management purposes including such plans as currently exist within the State for these purposes, and

(6) Enforceability of emission limitations and control measures.

(f) The plan must discuss the reasons why the above and other reasonable measures considered in the development of the long-term strategy were or were not adopted as part of the long-term strategy.

(g) The State, in developing the long-term strategy, must take into account the effect of new sources, and the costs of compliance, the time necessary for compliance, the energy and nonair quality environmental impacts of compliance, and the remaining useful life of any affected existing source and equipment therein.

[45 FR 80089, Dec. 2, 1980, as amended at 64 FR 35764, 35774, July 1, 1999]

§ 51.307 New source review.

(a) For purposes of new source review of any new major stationary source or

major modification that would be constructed in an area that is designated attainment or unclassified under section 107(d)(1)(D) or (E) of the CAA, the State plan must, in any review under § 51.166 with respect to visibility protection and analyses, provide for:

(1) Written notification of all affected Federal Land Managers of any proposed new major stationary source or major modification that may affect visibility in any Federal Class I area. Such notification must be made in writing and include a copy of all information relevant to the permit application within 30 days of receipt of and at least 60 days prior to public hearing by the State on the application for permit to construct. Such notification must include an analysis of the anticipated impacts on visibility in any Federal Class I area,

(2) Where the State requires or receives advance notification (e.g. early consultation with the source prior to submission of the application or notification of intent to monitor under § 51.166) of a permit application of a source that may affect visibility the State must notify all affected Federal Land Managers within 30 days of such advance notification, and

(3) Consideration of any analysis performed by the Federal Land Manager, provided within 30 days of the notification and analysis required by paragraph (a)(1) of this section, that such proposed new major stationary source or major modification may have an adverse impact on visibility in any Federal Class I area. Where the State finds that such an analysis does not demonstrate to the satisfaction of the State that an adverse impact will result in the Federal Class I area, the State must, in the notice of public hearing, either explain its decision or give notice as to where the explanation can be obtained.

(b) The plan shall also provide for the review of any new major stationary source or major modification:

(1) That may have an impact on any integral vista of a mandatory Class I Federal area, if it is identified in accordance with § 51.304 by the Federal Land Manager at least 12 months before submission of a complete permit application, except where the Federal Land Manager has provided notice and opportunity for public comment on the integral vista in which case the review must include impacts on any integral vista identified at least 6 months prior to submission of a complete permit application, unless the State determines under § 51.304(d) that the identification was not in accordance with the identification criteria, or

(2) That proposes to locate in an area classified as nonattainment under section 107(d)(1)(A), (B), or (C) of the Clean Air Act that may have an impact on visibility in any mandatory Class I Federal area.

(c) Review of any major stationary source or major modification under paragraph (b) of this section, shall be conducted in accordance with paragraph (a) of this section, and § 51.166(o), (p)(1) through (2), and (q). In conducting such reviews the State must ensure that the source's emissions will be consistent with making reasonable progress toward the national visibility goal referred to in § 51.300(a). The State may take into account the costs of compliance, the time necessary for compliance, the energy and nonair quality environmental impacts of compliance, and the useful life of the source.

(d) The State may require monitoring of visibility in any Federal Class I area near the proposed new stationary source or major modification for such purposes and by such means as the State deems necessary and appropriate.

[45 FR 80089, Dec. 2, 1980, as amended at 64 FR 35765, 35774, July 1, 1999]

§ 51.308 Regional haze program requirements.

(a) *What is the purpose of this section?* This section establishes requirements for implementation plans, plan revisions, and periodic progress reviews to address regional haze.

(b) *When are the first implementation plans due under the regional haze program?* Except as provided in § 51.309(c), each State identified in § 51.300(b)(3) must submit, for the entire State, an implementation plan for regional haze meeting the requirements of paragraphs (d) and (e) of this section no later than December 17, 2007.

(c) [Reserved]

(d) *What are the core requirements for the implementation plan for regional haze?* The State must address regional haze in each mandatory Class I Federal area located within the State and in each mandatory Class I Federal area located outside the State which may be affected by emissions from within the State. To meet the core requirements for regional haze for these areas, the State must submit an implementation plan containing the following plan elements and supporting documentation for all required analyses:

(1) *Reasonable progress goals.* For each mandatory Class I Federal area located within the State, the State must establish goals (expressed in deciviews) that provide for reasonable progress towards achieving natural visibility conditions. The reasonable progress goals must provide for an improvement in visibility for the most impaired days over the period of the implementation plan and ensure no degradation in visibility for the least impaired days over the same period.

(i) In establishing a reasonable progress goal for any mandatory Class I Federal area within the State, the State must:

(A) Consider the costs of compliance, the time necessary for compliance, the energy and non-air quality environmental impacts of compliance, and the remaining useful life of any potentially affected sources, and include a demonstration showing how these factors were taken into consideration in selecting the goal.

(B) Analyze and determine the rate of progress needed to attain natural visibility conditions by the year 2064. To calculate this rate of progress, the State must compare baseline visibility conditions to natural visibility conditions in the mandatory Federal Class I area and determine the uniform rate of visibility improvement (measured in deciviews) that would need to be maintained during each implementation period in order to attain natural visibility conditions by 2064. In establishing the reasonable progress goal, the State must consider the uniform rate of improvement in visibility and the emission reduction measures needed to achieve it for the period covered by the implementation plan.

(ii) For the period of the implementation plan, if the State establishes a reasonable progress goal that provides for a slower rate of improvement in visibility than the rate that would be needed to attain natural conditions by 2064, the State must demonstrate, based on the factors in paragraph (d)(1)(i)(A) of this section, that the rate of progress for the implementation plan to attain natural conditions by 2064 is not reasonable; and that the progress goal adopted by the State is reasonable. The State must provide to the public for review as part of its implementation plan an assessment of the number of years it would take to attain natural conditions if visibility improvement continues at the rate of progress selected by the State as reasonable.

(iii) In determining whether the State's goal for visibility improvement provides for reasonable progress towards natural visibility conditions, the Administrator will evaluate the demonstrations developed by the State pursuant to paragraphs (d)(1)(i) and (d)(1)(ii) of this section.

(iv) In developing each reasonable progress goal, the State must consult with those States which may reasonably be anticipated to cause or contribute to visibility impairment in the mandatory Class I Federal area. In any situation in which the State cannot agree with another such State or group of States that a goal provides for reasonable progress, the State must describe in its submittal the actions taken to resolve the disagreement. In reviewing the State's implementation plan submittal, the Administrator will take this information into account in determining whether the State's goal for visibility improvement provides for reasonable progress towards natural visibility conditions.

(v) The reasonable progress goals established by the State are not directly enforceable but will be considered by the Administrator in evaluating the adequacy of the measures in the implementation plan to achieve the progress goal adopted by the State.

(vi) The State may not adopt a reasonable progress goal that represents

less visibility improvement than is expected to result from implementation of other requirements of the CAA during the applicable planning period.

(2) *Calculations of baseline and natural visibility conditions.* For each mandatory Class I Federal area located within the State, the State must determine the following visibility conditions (expressed in deciviews):

(i) Baseline visibility conditions for the most impaired and least impaired days. The period for establishing baseline visibility conditions is 2000 to 2004. Baseline visibility conditions must be calculated, using available monitoring data, by establishing the average degree of visibility impairment for the most and least impaired days for each calendar year from 2000 to 2004. The baseline visibility conditions are the average of these annual values. For mandatory Class I Federal areas without onsite monitoring data for 2000–2004, the State must establish baseline values using the most representative available monitoring data for 2000–2004, in consultation with the Administrator or his or her designee;

(ii) For an implementation plan that is submitted by 2003, the period for establishing baseline visibility conditions for the period of the first long-term strategy is the most recent 5-year period for which visibility monitoring data are available for the mandatory Class I Federal areas addressed by the plan. For mandatory Class I Federal areas without onsite monitoring data, the State must establish baseline values using the most representative available monitoring data, in consultation with the Administrator or his or her designee;

(iii) Natural visibility conditions for the most impaired and least impaired days. Natural visibility conditions must be calculated by estimating the degree of visibility impairment existing under natural conditions for the most impaired and least impaired days, based on available monitoring information and appropriate data analysis techniques; and

(iv)(A) For the first implementation plan addressing the requirements of paragraphs (d) and (e) of this section, the number of deciviews by which baseline conditions exceed natural visibility conditions for the most impaired and least impaired days; or

(B) For all future implementation plan revisions, the number of deciviews by which current conditions, as calculated under paragraph (f)(1) of this section, exceed natural visibility conditions for the most impaired and least impaired days.

(3) *Long-term strategy for regional haze.* Each State listed in § 51.300(b)(3) must submit a long-term strategy that addresses regional haze visibility impairment for each mandatory Class I Federal area within the State and for each mandatory Class I Federal area located outside the State which may be affected by emissions from the State. The long-term strategy must include enforceable emissions limitations, compliance schedules, and other measures as necessary to achieve the reasonable progress goals established by States having mandatory Class I Federal areas. In establishing its long-term strategy for regional haze, the State must meet the following requirements:

(i) Where the State has emissions that are reasonably anticipated to contribute to visibility impairment in any mandatory Class I Federal area located in another State or States, the State must consult with the other State(s) in order to develop coordinated emission management strategies. The State must consult with any other State having emissions that are reasonably anticipated to contribute to visibility impairment in any mandatory Class I Federal area within the State.

(ii) Where other States cause or contribute to impairment in a mandatory Class I Federal area, the State must demonstrate that it has included in its implementation plan all measures necessary to obtain its share of the emission reductions needed to meet the progress goal for the area. If the State has participated in a regional planning process, the State must ensure it has included all measures needed to achieve its apportionment of emission reduction obligations agreed upon through that process.

(iii) The State must document the technical basis, including modeling, monitoring and emissions information,

on which the State is relying to determine its apportionment of emission reduction obligations necessary for achieving reasonable progress in each mandatory Class I Federal area it affects. The State may meet this requirement by relying on technical analyses developed by the regional planning organization and approved by all State participants. The State must identify the baseline emissions inventory on which its strategies are based. The baseline emissions inventory year is presumed to be the most recent year of the consolidate periodic emissions inventory.

(iv) The State must identify all anthropogenic sources of visibility impairment considered by the State in developing its long-term strategy. The State should consider major and minor stationary sources, mobile sources, and area sources.

(v) The State must consider, at a minimum, the following factors in developing its long-term strategy:

(A) Emission reductions due to ongoing air pollution control programs, including measures to address reasonably attributable visibility impairment;

(B) Measures to mitigate the impacts of construction activities;

(C) Emissions limitations and schedules for compliance to achieve the reasonable progress goal;

(D) Source retirement and replacement schedules;

(E) Smoke management techniques for agricultural and forestry management purposes including plans as currently exist within the State for these purposes;

(F) Enforceability of emissions limitations and control measures; and

(G) The anticipated net effect on visibility due to projected changes in point, area, and mobile source emissions over the period addressed by the long-term strategy.

(4) *Monitoring strategy and other implementation plan requirements.* The State must submit with the implementation plan a monitoring strategy for measuring, characterizing, and reporting of regional haze visibility impairment that is representative of all mandatory Class I Federal areas within the State. This monitoring strategy must be coordinated with the monitoring strategy required in §51.305 for reasonably attributable visibility impairment. Compliance with this requirement may be met through participation in the Interagency Monitoring of Protected Visual Environments network. The implementation plan must also provide for the following:

(i) The establishment of any additional monitoring sites or equipment needed to assess whether reasonable progress goals to address regional haze for all mandatory Class I Federal areas within the State are being achieved.

(ii) Procedures by which monitoring data and other information are used in determining the contribution of emissions from within the State to regional haze visibility impairment at mandatory Class I Federal areas both within and outside the State.

(iii) For a State with no mandatory Class I Federal areas, procedures by which monitoring data and other information are used in determining the contribution of emissions from within the State to regional haze visibility impairment at mandatory Class I Federal areas in other States.

(iv) The implementation plan must provide for the reporting of all visibility monitoring data to the Administrator at least annually for each mandatory Class I Federal area in the State. To the extent possible, the State should report visibility monitoring data electronically.

(v) A statewide inventory of emissions of pollutants that are reasonably anticipated to cause or contribute to visibility impairment in any mandatory Class I Federal area. The inventory must include emissions for a baseline year, emissions for the most recent year for which data are available, and estimates of future projected emissions. The State must also include a commitment to update the inventory periodically.

(vi) Other elements, including reporting, recordkeeping, and other measures, necessary to assess and report on visibility.

(e) *Best Available Retrofit Technology (BART) requirements for regional haze visibility impairment.* The State must

submit an implementation plan containing emission limitations representing BART and schedules for compliance with BART for each BART-eligible source that may reasonably be anticipated to cause or contribute to any impairment of visibility in any mandatory Class I Federal area, unless the State demonstrates that an emissions trading program or other alternative will achieve greater reasonable progress toward natural visibility conditions.

(1) To address the requirements for BART, the State must submit an implementation plan containing the following plan elements and include documentation for all required analyses:

(i) A list of all BART-eligible sources within the State.

(ii) A determination of BART for each BART-eligible source in the State that emits any air pollutant which may reasonably be anticipated to cause or contribute to any impairment of visibility in any mandatory Class I Federal area. All such sources are subject to BART.

(A) The determination of BART must be based on an analysis of the best system of continuous emission control technology available and associated emission reductions achievable for each BART-eligible source that is subject to BART within the State. In this analysis, the State must take into consideration the technology available, the costs of compliance, the energy and nonair quality environmental impacts of compliance, any pollution control equipment in use at the source, the remaining useful life of the source, and the degree of improvement in visibility which may reasonably be anticipated to result from the use of such technology.

(B) The determination of BART for fossil-fuel fired power plants having a total generating capacity greater than 750 megawatts must be made pursuant to the guidelines in appendix Y of this part (Guidelines for BART Determinations Under the Regional Haze Rule).

(C) *Exception.* A State is not required to make a determination of BART for SO_2 or for NO_X if a BART-eligible source has the potential to emit less than 40 tons per year of such pollutant(s), or for PM_{10} if a BART-eligible source has the potential to emit less than 15 tons per year of such pollutant.

(iii) If the State determines in establishing BART that technological or economic limitations on the applicability of measurement methodology to a particular source would make the imposition of an emission standard infeasible, it may instead prescribe a design, equipment, work practice, or other operational standard, or combination thereof, to require the application of BART. Such standard, to the degree possible, is to set forth the emission reduction to be achieved by implementation of such design, equipment, work practice or operation, and must provide for compliance by means which achieve equivalent results.

(iv) A requirement that each source subject to BART be required to install and operate BART as expeditiously as practicable, but in no event later than 5 years after approval of the implementation plan revision.

(v) A requirement that each source subject to BART maintain the control equipment required by this subpart and establish procedures to ensure such equipment is properly operated and maintained.

(2) A State may opt to implement or require participation in an emissions trading program or other alternative measure rather than to require sources subject to BART to install, operate, and maintain BART. Such an emissions trading program or other alternative measure must achieve greater reasonable progress than would be achieved through the installation and operation of BART. For all such emission trading programs or other alternative measures, the State must submit an implementation plan containing the following plan elements and include documentation for all required analyses:

(i) A demonstration that the emissions trading program or other alternative measure will achieve greater reasonable progress than would have resulted from the installation and operation of BART at all sources subject to BART in the State and covered by the alternative program. This demonstration must be based on the following:

(A) A list of all BART-eligible sources within the State.

(B) A list of all BART-eligible sources and all BART source categories covered by the alternative program. The State is not required to include every BART source category or every BART-eligible source within a BART source category in an alternative program, but each BART-eligible source in the State must be subject to the requirements of the alternative program, have a federally enforceable emission limitation determined by the State and approved by EPA as meeting BART in accordance with section 302(c) or paragraph (e)(1) of this section, or otherwise addressed under paragraphs (e)(1) or (e)(4)of this section.

(C) An analysis of the best system of continuous emission control technology available and associated emission reductions achievable for each source within the State subject to BART and covered by the alternative program. This analysis must be conducted by making a determination of BART for each source subject to BART and covered by the alternative program as provided for in paragraph (e)(1) of this section, unless the emissions trading program or other alternative measure has been designed to meet a requirement other than BART (such as the core requirement to have a long-term strategy to achieve the reasonable progress goals established by States). In this case, the State may determine the best system of continuous emission control technology and associated emission reductions for similar types of sources within a source category based on both source-specific and category-wide information, as appropriate.

(D) An analysis of the projected emissions reductions achievable through the trading program or other alternative measure.

(E) A determination under paragraph (e)(3) of this section or otherwise based on the clear weight of evidence that the trading program or other alternative measure achieves greater reasonable progress than would be achieved through the installation and operation of BART at the covered sources.

(ii) [Reserved]

(iii) A requirement that all necessary emission reductions take place during the period of the first long-term strategy for regional haze. To meet this requirement, the State must provide a detailed description of the emissions trading program or other alternative measure, including schedules for implementation, the emission reductions required by the program, all necessary administrative and technical procedures for implementing the program, rules for accounting and monitoring emissions, and procedures for enforcement.

(iv) A demonstration that the emission reductions resulting from the emissions trading program or other alternative measure will be surplus to those reductions resulting from measures adopted to meet requirements of the CAA as of the baseline date of the SIP.

(v) At the State's option, a provision that the emissions trading program or other alternative measure may include a geographic enhancement to the program to address the requirement under § 51.302(c) related to BART for reasonably attributable impairment from the pollutants covered under the emissions trading program or other alternative measure.

(vi) For plans that include an emissions trading program that establishes a cap on total annual emissions of SO_2 or NO_X from sources subject to the program, requires the owners and operators of sources to hold allowances or authorizations to emit equal to emissions, and allows the owners and operators of sources and other entities to purchase, sell, and transfer allowances, the following elements are required concerning the emissions covered by the cap:

(A) Applicability provisions defining the sources subject to the program. The State must demonstrate that the applicability provisions (including the size criteria for including sources in the program) are designed to prevent any significant potential shifting within the State of production and emissions from sources in the program to sources outside the program. In the case of a program covering sources in

multiple States, the States must demonstrate that the applicability provisions in each State cover essentially the same size facilities and, if source categories are specified, cover the same source categories and prevent any significant, potential shifting within such States of production and emissions to sources outside the program.

(B) Allowance provisions ensuring that the total value of allowances (in tons) issued each year under the program will not exceed the emissions cap (in tons) on total annual emissions from the sources in the program.

(C) Monitoring provisions providing for consistent and accurate measurements of emissions from sources in the program to ensure that each allowance actually represents the same specified tonnage of emissions and that emissions are measured with similar accuracy at all sources in the program. The monitoring provisions must require that boilers, combustion turbines, and cement kilns in the program allowed to sell or transfer allowances must comply with the requirements of part 75 of this chapter. The monitoring provisions must require that other sources in the program allowed to sell or transfer allowances must provide emissions information with the same precision, reliability, accessibility, and timeliness as information provided under part 75 of this chapter.

(D) Recordkeeping provisions that ensure the enforceability of the emissions monitoring provisions and other program requirements. The recordkeeping provisions must require that boilers, combustion turbines, and cement kilns in the program allowed to sell or transfer allowances must comply with the recordkeeping provisions of part 75 of this chapter. The recordkeeping provisions must require that other sources in the program allowed to sell or transfer allowances must comply with recordkeeping requirements that, as compared with the recordkeeping provisions under part 75 of this chapter, are of comparable stringency and require recording of comparable types of information and retention of the records for comparable periods of time.

(E) Reporting provisions requiring timely reporting of monitoring data with sufficient frequency to ensure the enforceability of the emissions monitoring provisions and other program requirements and the ability to audit the program. The reporting provisions must require that boilers, combustion turbines, and cement kilns in the program allowed to sell or transfer allowances must comply with the reporting provisions of part 75 of this chapter, except that, if the Administrator is not the tracking system administrator for the program, emissions may be reported to the tracking system administrator, rather than to the Administrator. The reporting provisions must require that other sources in the program allowed to sell or transfer allowances must comply with reporting requirements that, as compared with the reporting provisions under part 75 of this chapter, are of comparable stringency and require reporting of comparable types of information and require comparable timeliness and frequency of reporting.

(F) Tracking system provisions which provide for a tracking system that is publicly available in a secure, centralized database to track in a consistent manner all allowances and emissions in the program.

(G) Authorized account representative provisions ensuring that the owners and operators of a source designate one individual who is authorized to represent the owners and operators in all matters pertaining to the trading program.

(H) Allowance transfer provisions providing procedures that allow timely transfer and recording of allowances, minimize administrative barriers to the operation of the allowance market, and ensure that such procedures apply uniformly to all sources and other potential participants in the allowance market.

(I) Compliance provisions prohibiting a source from emitting a total tonnage of a pollutant that exceeds the tonnage value of its allowance holdings, including the methods and procedures for determining whether emissions exceed allowance holdings. Such method and procedures shall apply consistently from source to source.

(J) Penalty provisions providing for mandatory allowance deductions for

excess emissions that apply consistently from source to source. The tonnage value of the allowances deducted shall equal at least three times the tonnage of the excess emissions.

(K) For a trading program that allows banking of allowances, provisions clarifying any restrictions on the use of these banked allowances.

(L) Program assessment provisions providing for periodic program evaluation to assess whether the program is accomplishing its goals and whether modifications to the program are needed to enhance performance of the program.

(3) A State which opts under 40 CFR 51.308(e)(2) to implement an emissions trading program or other alternative measure rather than to require sources subject to BART to install, operate, and maintain BART may satisfy the final step of the demonstration required by that section as follows: If the distribution of emissions is not substantially different than under BART, and the alternative measure results in greater emission reductions, then the alternative measure may be deemed to achieve greater reasonable progress. If the distribution of emissions is significantly different, the State must conduct dispersion modeling to determine differences in visibility between BART and the trading program for each impacted Class I area, for the worst and best 20 percent of days. The modeling would demonstrate ''greater reasonable progress'' if both of the following two criteria are met:

(i) Visibility does not decline in any Class I area, and

(ii) There is an overall improvement in visibility, determined by comparing the average differences between BART and the alternative over all affected Class I areas.

(4) A State subject to a trading program established in accordance with § 52.38 or § 52.39 under a Transport Rule Federal Implementation Plan need not require BART-eligible fossil fuel-fired steam electric plants in the State to install, operate, and maintain BART for the pollutant covered by such trading program in the State. A State that chooses to meet the emission reduction requirements of the Transport Rule by submitting a SIP revision that establishes a trading program and is approved as meeting the requirements of § 52.38 or § 52.39 also need not require BART-eligible fossil fuel-fired steam electric plants in the State to install, operate, and maintain BART for the pollutant covered by such trading program in the State. A State may adopt provisions, consistent with the requirements applicable to the State for a trading program established in accordance with § 52.38 or § 52.39 under the Transport Rule Federal Implementation Plan or established under a SIP revision that is approved as meeting the requirements of § 52.38 or § 52.39, for a geographic enhancement to the program to address the requirement under § 51.302(c) related to BART for reasonably attributable impairment from the pollutant covered by such trading program in that State.

(5) After a State has met the requirements for BART or implemented emissions trading program or other alternative measure that achieves more reasonable progress than the installation and operation of BART, BART-eligible sources will be subject to the requirements of paragraph (d) of this section in the same manner as other sources.

(6) Any BART-eligible facility subject to the requirement under paragraph (e) of this section to install, operate, and maintain BART may apply to the Administrator for an exemption from that requirement. An application for an exemption will be subject to the requirements of § 51.303(a)(2)–(h).

(f) *Requirements for comprehensive periodic revisions of implementation plans for regional haze.* Each State identified in § 51.300(b)(3) must revise and submit its regional haze implementation plan revision to EPA by July 31, 2018 and every ten years thereafter. In each plan revision, the State must evaluate and reassess all of the elements required in paragraph (d) of this section, taking into account improvements in monitoring data collection and analysis techniques, control technologies, and other relevant factors. In evaluating and reassessing these elements, the State must address the following:

(1) Current visibility conditions for the most impaired and least impaired days, and actual progress made towards natural conditions during the

previous implementation period. The period for calculating current visibility conditions is the most recent five year period preceding the required date of the implementation plan submittal for which data are available. Current visibility conditions must be calculated based on the annual average level of visibility impairment for the most and least impaired days for each of these five years. Current visibility conditions are the average of these annual values.

(2) The effectiveness of the long-term strategy for achieving reasonable progress goals over the prior implementation period(s); and

(3) Affirmation of, or revision to, the reasonable progress goal in accordance with the procedures set forth in paragraph (d)(1) of this section. If the State established a reasonable progress goal for the prior period which provided a slower rate of progress than that needed to attain natural conditions by the year 2064, the State must evaluate and determine the reasonableness, based on the factors in paragraph (d)(1)(i)(A) of this section, of additional measures that could be adopted to achieve the degree of visibility improvement projected by the analysis contained in the first implementation plan described in paragraph (d)(1)(i)(B) of this section.

(g) *Requirements for periodic reports describing progress towards the reasonable progress goals.* Each State identified in § 51.300(b)(3) must submit a report to the Administrator every 5 years evaluating progress towards the reasonable progress goal for each mandatory Class I Federal area located within the State and in each mandatory Class I Federal area located outside the State which may be affected by emissions from within the State. The first progress report is due 5 years from submittal of the initial implementation plan addressing paragraphs (d) and (e) of this section. The progress reports must be in the form of implementation plan revisions that comply with the procedural requirements of § 51.102 and § 51.103. Periodic progress reports must contain at a minimum the following elements:

(1) A description of the status of implementation of all measures included in the implementation plan for achieving reasonable progress goals for mandatory Class I Federal areas both within and outside the State.

(2) A summary of the emissions reductions achieved throughout the State through implementation of the measures described in paragraph (g)(1) of this section.

(3) For each mandatory Class I Federal area within the State, the State must assess the following visibility conditions and changes, with values for most impaired and least impaired days expressed in terms of 5-year averages of these annual values.

(i) The current visibility conditions for the most impaired and least impaired days;

(ii) The difference between current visibility conditions for the most impaired and least impaired days and baseline visibility conditions;

(iii) The change in visibility impairment for the most impaired and least impaired days over the past 5 years;

(4) An analysis tracking the change over the past 5 years in emissions of pollutants contributing to visibility impairment from all sources and activities within the State. Emissions changes should be identified by type of source or activity. The analysis must be based on the most recent updated emissions inventory, with estimates projected forward as necessary and appropriate, to account for emissions changes during the applicable 5-year period.

(5) An assessment of any significant changes in anthropogenic emissions within or outside the State that have occurred over the past 5 years that have limited or impeded progress in reducing pollutant emissions and improving visibility.

(6) An assessment of whether the current implementation plan elements and strategies are sufficient to enable the State, or other States with mandatory Federal Class I areas affected by emissions from the State, to meet all established reasonable progress goals.

(7) A review of the State's visibility monitoring strategy and any modifications to the strategy as necessary.

(h) *Determination of the adequacy of existing implementation plan.* At the same time the State is required to submit any 5-year progress report to EPA in accordance with paragraph (g) of

this section, the State must also take one of the following actions based upon the information presented in the progress report:

(1) If the State determines that the existing implementation plan requires no further substantive revision at this time in order to achieve established goals for visibility improvement and emissions reductions, the State must provide to the Administrator a negative declaration that further revision of the existing implementation plan is not needed at this time.

(2) If the State determines that the implementation plan is or may be inadequate to ensure reasonable progress due to emissions from sources in another State(s) which participated in a regional planning process, the State must provide notification to the Administrator and to the other State(s) which participated in the regional planning process with the States. The State must also collaborate with the other State(s) through the regional planning process for the purpose of developing additional strategies to address the plan's deficiencies.

(3) Where the State determines that the implementation plan is or may be inadequate to ensure reasonable progress due to emissions from sources in another country, the State shall provide notification, along with available information, to the Administrator.

(4) Where the State determines that the implementation plan is or may be inadequate to ensure reasonable progress due to emissions from sources within the State, the State shall revise its implementation plan to address the plan's deficiencies within one year.

(i) *What are the requirements for State and Federal Land Manager coordination?* (1) By November 29, 1999, the State must identify in writing to the Federal Land Managers the title of the official to which the Federal Land Manager of any mandatory Class I Federal area can submit any recommendations on the implementation of this subpart including, but not limited to:

(i) Identification of impairment of visibility in any mandatory Class I Federal area(s); and

(ii) Identification of elements for inclusion in the visibility monitoring strategy required by § 51.305 and this section.

(2) The State must provide the Federal Land Manager with an opportunity for consultation, in person and at least 60 days prior to holding any public hearing on an implementation plan (or plan revision) for regional haze required by this subpart. This consultation must include the opportunity for the affected Federal Land Managers to discuss their:

(i) Assessment of impairment of visibility in any mandatory Class I Federal area; and

(ii) Recommendations on the development of the reasonable progress goal and on the development and implementation of strategies to address visibility impairment.

(3) In developing any implementation plan (or plan revision), the State must include a description of how it addressed any comments provided by the Federal Land Managers.

(4) The plan (or plan revision) must provide procedures for continuing consultation between the State and Federal Land Manager on the implementation of the visibility protection program required by this subpart, including development and review of implementation plan revisions and 5-year progress reports, and on the implementation of other programs having the potential to contribute to impairment of visibility in mandatory Class I Federal areas.

[64 FR 35765, July 1, 1999, as amended at 70 FR 39156, July 6, 2005; 71 FR 60631, Oct. 13, 2006; 77 FR 33656, June 7, 2012]

§ 51.309 Requirements related to the Grand Canyon Visibility Transport Commission.

(a) What is the purpose of this section? This section establishes the requirements for the first regional haze implementation plan to address regional haze visibility impairment in the 16 Class I areas covered by the Grand Canyon Visibility Transport Commission Report. For the period through 2018, certain States (defined in paragraph (b) of this section as Transport Region States) may choose to implement the Commission's recommendations within the framework of the national regional haze program

and applicable requirements of the Act by complying with the provisions of this section. If a Transport Region State submits an implementation plan which is approved by EPA as meeting the requirements of this section, it will be deemed to comply with the requirements for reasonable progress with respect to the 16 Class I areas for the period from approval of the plan through 2018. Any Transport Region State electing not to submit an implementation plan under this section is subject to the requirements of § 51.308 in the same manner and to the same extent as any State not included within the Transport Region. Except as provided in paragraph (g) of this section, each Transport Region State is also subject to the requirements of § 51.308 with respect to any other Federal mandatory Class I areas within the State or affected by emissions from the State.

(b) *Definitions.* For the purposes of this section:

(1) *16 Class I areas* means the following mandatory Class I Federal areas on the Colorado Plateau: Grand Canyon National Park, Sycamore Canyon Wilderness, Petrified Forest National Park, Mount Baldy Wilderness, San Pedro Parks Wilderness, Mesa Verde National Park, Weminuche Wilderness, Black Canyon of the Gunnison Wilderness, West Elk Wilderness, Maroon Bells Wilderness, Flat Tops Wilderness, Arches National Park, Canyonlands National Park, Capital Reef National Park, Bryce Canyon National Park, and Zion National Park.

(2) *Transport Region State* means one of the States that is included within the Transport Region addressed by the Grand Canyon Visibility Transport Commission (Arizona, California, Colorado, Idaho, Nevada, New Mexico, Oregon, Utah, and Wyoming).

(3) *Commission Report* means the report of the Grand Canyon Visibility Transport Commission entitled ''Recommendations for Improving Western Vistas,'' dated June 10, 1996.

(4) *Fire* means wildfire, wildland fire (including prescribed natural fire), prescribed fire, and agricultural burning conducted and occurring on Federal, State, and private wildlands and farmlands.

(5) Milestone means the maximum level of annual regional SO_2 emissions, in tons per year, for a given year, assessed annually, through the year 2018, consistent with paragraph (d)(4) of this section.

(6) *Continuous decline in total mobile source emissions* means that the projected level of emissions from mobile sources of each listed pollutant in 2008, 2013, and 2018, are less than the projected level of emissions from mobile sources of each listed pollutant for the previous period (*i.e.*, 2008 less than 2003; 2013 less than 2008; and 2018 less than 2013).

(7) Base year means the year for which data for a source included within the program were used by the WRAP to calculate emissions as a starting point for development of the milestone required by paragraph (d)(4)(i) of this section.

(8) *Base year* means the year, generally a year between 1996 and 1998, for which data for a source included within the program were used by the WRAP to calculate base year emissions as a starting point for development of the Annex required by paragraph (f) of this section.

(9)–(12) [Reserved]

(13) *Eligible renewable energy resource*, for purposes of 40 CFR 51.309, means electricity generated by non-nuclear and non-fossil low or no air emission technologies.

(c) Implementation Plan Schedule. Each Transport Region State electing to submit an implementation plan under this section must submit such a plan no later than December 17, 2007. Indian Tribes may submit implementation plans after this deadline.

(d) *Requirements of the first implementation plan for States electing to adopt all of the recommendations of the Commission Report.* Except as provided for in paragraph (e) of this section, each Transport Region State must submit an implementation plan that meets the following requirements:

(1) *Time period covered.* The implementation plan must be effective through December 31, 2018 and continue in effect until an implementation plan revision is approved by EPA in accordance with § 51.308(f).

(2) *Projection of visibility improvement.* For each of the 16 mandatory Class I areas located within the Transport Region State, the plan must include a projection of the improvement in visibility conditions (expressed in deciviews, and in any additional ambient visibility metrics deemed appropriate by the State) expected through the year 2018 for the most impaired and least impaired days, based on the implementation of all measures as required in the Commission report and the provisions in this section. The projection must be made in consultation with other Transport Region States with sources which may be reasonably anticipated to contribute to visibility impairment in the relevant Class I area. The projection may be based on a satisfactory regional analysis.

(3) *Treatment of clean-air corridors.* The plan must describe and provide for implementation of comprehensive emission tracking strategies for clean-air corridors to ensure that the visibility does not degrade on the least-impaired days at any of the 16 Class I areas. The strategy must include:

(i) An identification of clean-air corridors. The EPA will evaluate the State's identification of such corridors based upon the reports of the Commission's Meteorology Subcommittee and any future updates by a successor organization;

(ii) Within areas that are clean-air corridors, an identification of patterns of growth or specific sites of growth that could cause, or are causing, significant emissions increases that could have, or are having, visibility impairment at one or more of the 16 Class I areas.

(iii) In areas outside of clean-air corridors, an identification of significant emissions growth that could begin, or is beginning, to impair the quality of air in the corridor and thereby lead to visibility degradation for the least-impaired days in one or more of the 16 Class I areas.

(iv) If impairment of air quality in clean air corridors is identified pursuant to paragraphs (d)(3)(ii) and (iii) of this section, an analysis of the effects of increased emissions, including provisions for the identification of the need for additional emission reductions measures, and implementation of the additional measures where necessary.

(v) A determination of whether other clean air corridors exist for any of the 16 Class I areas. For any such clean air corridors, an identification of the necessary measures to protect against future degradation of air quality in any of the 16 Class I areas.

(4) *Implementation of stationary source reductions.* The first implementation plan submission must include:

(i) Provisions for stationary source emissions of SO_2. The plan submission must include a SO_2 program that contains quantitative emissions milestones for stationary source SO_2 emissions for each year through 2018. After the first two years of the program, compliance with the annual milestones may be measured by comparing a three-year rolling average of actual emissions with a rolling average of the emissions milestones for the same three years. During the first two years of the program, compliance with the milestones may be measured by a methodology of the States' choosing, so long as all States in the program use the same methodology. Compliance with the 2018 milestone shall be measured by comparing actual emissions from the year 2018 with the 2018 milestone. The milestones must provide for steady and continuing emissions reductions through 2018 consistent with the Commission's definition of reasonable progress, its goal of 50 to 70 percent reduction in SO_2 emissions from 1990 actual emission levels by 2040, applicable requirements under the CAA, and the timing of implementation plan assessments of progress and identification of any deficiencies which will be due in the years 2013 and 2018. The milestones must be shown to provide for greater reasonable progress than would be achieved by application of BART pursuant to § 51.308(e)(2).

(ii) Documentation of emissions calculation methods for SO_2. The plan submission must include documentation of the specific methodology used to calculate SO_2 emissions during the base year for each emitting unit included in the program. The implementation plan must also provide for documentation of any change to the specific

methodology used to calculate emissions at any emitting unit for any year after the base year.

(iii) Monitoring, recordkeeping, and reporting of SO_2 emissions. The plan submission must include provisions requiring the monitoring, recordkeeping, and annual reporting of actual stationary source SO_2 emissions within the State. The monitoring, recordkeeping, and reporting data must be sufficient to determine annually whether the milestone for each year through 2018 is achieved. The plan submission must provide for reporting of these data by the State to the Administrator and to the regional planning organization. The plan must provide for retention of records for at least 10 years from the establishment of the record.

(iv) Criteria and Procedures for a Market Trading Program. The plan must include the criteria and procedures for conducting an annual evaluation of whether the milestone is achieved and, in accordance with paragraph (d)(4)(v) of this section, for activating a market trading program in the event the milestone is not achieved. A draft of the annual report evaluating whether the milestone for each year is achieved shall be completed no later than 12 months from the end of each milestone year. The plan must also provide for assessments of the program in the years 2013 and 2018.

(v) Market Trading Program. The implementation plan must include requirements for a market trading program to be implemented in the event that a milestone is not achieved. The plan shall require that the market trading program be activated beginning no later than 15 months after the end of the first year in which the milestone is not achieved. The plan shall also require that sources comply, as soon as practicable, with the requirement to hold allowances covering their emissions. Such market trading program must be sufficient to achieve the milestones in paragraph (d)(4)(i) of this section, and must be consistent with the elements for such programs outlined in § 51.308(e)(2)(vi). Such a program may include a geographic enhancement to the program to address the requirement under § 51.302(c) related to BART for reasonably attributable impairment from the pollutants covered under the program.

(vi) Provision for the 2018 milestone.

(A) Unless and until a revised implementation plan is submitted in accordance with § 51.308(f) and approved by EPA, the implementation plan shall prohibit emissions from covered stationary sources in any year beginning in 2018 that exceed the year 2018 milestone. In no event shall a market-based program approved under § 51.308(f) allow an emissions cap for SO_2 that is less stringent than the 2018 milestone, unless the milestones are replaced by a different program approved by EPA as meeting the BART and reasonable progress requirements established in § 51.308.

(B) The implementation plan must provide a framework, including financial penalties for excess emissions based on the 2018 milestone, sufficient to ensure that the 2018 milestone will be met even if the implementation of the market trading program in paragraph (d)(4)(v) of this section has not yet been triggered, or the source allowance compliance provision of the trading program is not yet in effect.

(vii) Provisions for stationary source emissions of NO_X and PM. The implementation plan must contain any necessary long term strategies and BART requirements for stationary source PM and NO_X emissions. Any such BART provisions may be submitted pursuant to either § 51.308(e)(1) or '51.308(e)(2).

(5) *Mobile sources*. The plan submission must provide for:

(i) Statewide inventories of onroad and nonroad mobile source emissions of VOC, NO_X, SO_2, $PM_{2.5}$, elemental carbon, and organic carbon for the years 2003, 2008, 2013, and 2018.

(A) The inventories must demonstrate a continuous decline in total mobile source emissions (onroad plus nonroad; tailpipe and evaporative) of VOC, NO_X, $PM_{2.5}$, elemental carbon, and organic carbon, evaluated separately. If the inventories show a continuous decline in total mobile source emissions of each of these pollutants over the period 2003–2018, no further action is required as part of this plan to address mobile source emissions of

these pollutants. If the inventories do not show a continuous decline in mobile source emissions of one or more of these pollutants over the period 2003–2018, the plan submission must provide for an implementation plan revision by no later than December 31, 2008 containing any necessary long-term strategies to achieve a continuous decline in total mobile source emissions of the pollutant(s), to the extent practicable, considering economic and technological reasonableness and federal preemption of vehicle standards and fuel standards under title II of the CAA.

(B) The plan submission must also provide for an implementation plan revision by no later than December 31, 2008 containing any long-term strategies necessary to reduce emissions of SO_2 from nonroad mobile sources, consistent with the goal of reasonable progress. In assessing the need for such long-term strategies, the State may consider emissions reductions achieved or anticipated from any new Federal standards for sulfur in nonroad diesel fuel.

(ii) Interim reports to EPA and the public in years 2003, 2008, 2013, and 2018 on the implementation status of the regional and local strategies recommended by the Commission Report to address mobile source emissions.

(6) *Programs related to fire.* The plan must provide for:

(i) Documentation that all Federal, State, and private prescribed fire programs within the State evaluate and address the degree visibility impairment from smoke in their planning and application. In addition the plan must include smoke management programs that include all necessary components including, but not limited to, actions to minimize emissions, evaluation of smoke dispersion, alternatives to fire, public notification, air quality monitoring, surveillance and enforcement, and program evaluation.

(ii) A statewide inventory and emissions tracking system (spatial and temporal) of VOC, NO_X, elemental and organic carbon, and fine particle emissions from fire. In reporting and tracking emissions from fire from within the State, States may use information from regional data-gathering and tracking initiatives.

(iii) Identification and removal wherever feasible of any administrative barriers to the use of alternatives to burning in Federal, State, and private prescribed fire programs within the State.

(iv) Enhanced smoke management programs for fire that consider visibility effects, not only health and nuisance objectives, and that are based on the criteria of efficiency, economics, law, emission reduction opportunities, land management objectives, and reduction of visibility impact.

(v) Establishment of annual emission goals for fire, excluding wildfire, that will minimize emission increases from fire to the maximum extent feasible and that are established in cooperation with States, tribes, Federal land management agencies, and private entities.

(7) *Area sources of dust emissions from paved and unpaved roads.* The plan must include an assessment of the impact of dust emissions from paved and unpaved roads on visibility conditions in the 16 Class I Areas. If such dust emissions are determined to be a significant contributor to visibility impairment in the 16 Class I areas, the State must implement emissions management strategies to address the impact as necessary and appropriate.

(8) *Pollution prevention.* The plan must provide for:

(i) An initial summary of all pollution prevention programs currently in place, an inventory of all renewable energy generation capacity and production in use, or planned as of the year 2002 (expressed in megawatts and megawatt-hours), the total energy generation capacity and production for the State, the percent of the total that is renewable energy, and the State's anticipated contribution toward the renewable energy goals for 2005 and 2015, as provided in paragraph (d)(8)(vi) of this section.

(ii) Programs to provide incentives that reward efforts that go beyond compliance and/or achieve early compliance with air-pollution related requirements.

(iii) Programs to preserve and expand energy conservation efforts.

(iv) The identification of specific areas where renewable energy has the potential to supply power where it is

now lacking and where renewable energy is most cost-effective.

(v) Projections of the short- and long-term emissions reductions, visibility improvements, cost savings, and secondary benefits associated with the renewable energy goals, energy efficiency and pollution prevention activities.

(vi) A description of the programs relied on to achieve the State's contribution toward the Commission's goal that renewable energy will comprise 10 percent of the regional power needs by 2005 and 20 percent by 2015, and a demonstration of the progress toward achievement of the renewable energy goals in the years 2003, 2008, 2013, and 2018. This description must include documentation of the potential for renewable energy resources, the percentage of renewable energy associated with new power generation projects implemented or planned, and the renewable energy generation capacity and production in use and planned in the State. To the extent that it is not feasible for a State to meet its contribution to the regional renewable energy goals, the State must identify in the progress reports the measures implemented to achieve its contribution and explain why meeting the State's contribution was not feasible.

(9) *Implementation of additional recommendations.* The plan must provide for implementation of all other recommendations in the Commission report that can be practicably included as enforceable emission limits, schedules of compliance, or other enforceable measures (including economic incentives) to make reasonable progress toward remedying existing and preventing future regional haze in the 16 Class I areas. The State must provide a report to EPA and the public in 2003, 2008, 2013, and 2018 on the progress toward developing and implementing policy or strategy options recommended in the Commission Report.

(10) Periodic implementation plan revisions. Each Transport Region State must submit to the Administrator periodic reports in the years 2013 and 2018. The progress reports must be in the form of implementation plan revisions that comply with the procedural requirements of §§ 51.102 and 51.103.

(i) The report will assess the area for reasonable progress as provided in this section for mandatory Class I Federal area(s) located within the State and for mandatory Class I Federal area(s) located outside the State which may be affected by emissions from within the State. This demonstration may be based on assessments conducted by the States and/or a regional planning body. The progress reports must contain at a minimum the following elements:

(A) A description of the status of implementation of all measures included in the implementation plan for achieving reasonable progress goals for mandatory Class I Federal areas both within and outside the State.

(B) A summary of the emissions reductions achieved throughout the State through implementation of the measures described in paragraph (d)(10)(i)(A) of this section.

(C) For each mandatory Class I Federal area within the State, an assessment of the following: the current visibility conditions for the most impaired and least impaired days; the difference between current visibility conditions for the most impaired and least impaired days and baseline visibility conditions; the change in visibility impairment for the most impaired and least impaired days over the past 5 years.

(D) An analysis tracking the change over the past 5 years in emissions of pollutants contributing to visibility impairment from all sources and activities within the State. Emissions changes should be identified by type of source or activity. The analysis must be based on the most recent updated emissions inventory, with estimates projected forward as necessary and appropriate, to account for emissions changes during the applicable 5-year period.

(E) An assessment of any significant changes in anthropogenic emissions within or outside the State that have occurred over the past 5 years that have limited or impeded progress in reducing pollutant emissions and improving visibility.

(F) An assessment of whether the current implementation plan elements and strategies are sufficient to enable the State, or other States with mandatory Federal Class I areas affected by

emissions from the State, to meet all established reasonable progress goals.

(G) A review of the State's visibility monitoring strategy and any modifications to the strategy as necessary.

(ii) At the same time the State is required to submit any 5-year progress report to EPA in accordance with paragaph (d)(10)(i) of this section, the State must also take one of the following actions based upon the information presented in the progress report:

(A) If the State determines that the existing implementation plan requires no further substantive revision at this time in order to achieve established goals for visibility improvement and emissions reductions, the State must provide to the Administrator a negative declaration that further revision of the existing implementation plan is not needed at this time.

(B) If the State determines that the implementation plan is or may be inadequate to ensure reasonable progress due to emissions from sources in another State(s) which participated in a regional planning process, the State must provide notification to the Administrator and to the other State(s) which participated in the regional planning process with the States. The State must also collaborate with the other State(s) through the regional planning process for the purpose of developing additional strategies to address the plan's deficiencies.

(C) Where the State determines that the implementation plan is or may be inadequate to ensure reasonable progress due to emissions from sources in another country, the State shall provide notification, along with available information, to the Administrator.

(D) Where the State determines that the implementation plan is or may be inadequate to ensure reasonable progress due to emissions from within the State, the State shall develop additional strategies to address the plan deficiencies and revise the implementation plan no later than one year from the date that the progress report was due.

(11) *State planning and interstate coordination.* In complying with the requirements of this section, States may include emission reductions strategies that are based on coordinated implementation with other States. Examples of these strategies include economic incentive programs and transboundary emissions trading programs. The implementation plan must include documentation of the technical and policy basis for the individual State apportionment (or the procedures for apportionment throughout the trans-boundary region), the contribution addressed by the State's plan, how it coordinates with other State plans, and compliance with any other appropriate implementation plan approvability criteria. States may rely on the relevant technical, policy and other analyses developed by a regional entity (such as the Western Regional Air Partnership) in providing such documentation. Conversely, States may elect to develop their own programs without relying on work products from a regional entity.

(12) *Tribal implementation.* Consistent with 40 CFR Part 49, tribes within the Transport Region may implement the required visibility programs for the 16 Class I areas, in the same manner as States, regardless of whether such tribes have participated as members of a visibility transport commission.

(e) *States electing not to implement the commission recommendations.* Any Transport Region State may elect not to implement the Commission recommendations set forth in paragraph (d) of this section. Such States are required to comply with the timelines and requirements of § 51.308. Any Transport Region State electing not to implement the Commission recommendations must advise the other States in the Transport Region of the nature of the program and the effect of the program on visibility-impairing emissions, so that other States can take this information into account in developing programs under this section.

(f) [Reserved]

(g) Additional Class I areas. Each Transport Region State implementing the provisions of this section as the basis for demonstrating reasonable progress for mandatory Class I Federal areas other than the 16 Class I areas must include the following provisions in its implementation plan. If a Transport Region State submits an implementation plan which is approved by

EPA as meeting the requirements of this section, it will be deemed to comply with the requirements for reasonable progress for the period from approval of the plan to 2018.

(1) A demonstration of expected visibility conditions for the most impaired and least impaired days at the additional mandatory Class I Federal area(s) based on emissions projections from the long-term strategies in the implementation plan. This demonstration may be based on assessments conducted by the States and/or a regional planning body.

(2) Provisions establishing reasonable progress goals and implementing any additional measures necessary to demonstrate reasonable progress for the additional mandatory Federal Class I areas. These provisions must comply with the provisions of § 51.308(d)(1) through (4).

(i) In developing long-term strategies pursuant to § 51.308(d)(3), the State may build upon the strategies implemented under paragraph (d) of this section, and take full credit for the visibility improvement achieved through these strategies.

(ii) The requirement under § 51.308(e) related to Best Available Retrofit Technology for regional haze is deemed to be satisfied for pollutants addressed by the milestones and backstop trading program if, in establishing the emission reductions milestones under paragraph (d)(4) of this section, it is shown that greater reasonable progress will be achieved for these additional Class I areas than would be achieved through the application of source-specific BART emission limitations under § 51.308(e)(1).

(iii) The Transport Region State may consider whether any strategies necessary to achieve the reasonable progress goals required by paragraph (g)(2) of this section are incompatible with the strategies implemented under paragraph (d) of this section to the extent the State adequately demonstrates that the incompatibility is related to the costs of the compliance, the time necessary for compliance, the energy and no air quality environmental impacts of compliance, or the remaining useful life of any existing source subject to such requirements.

[64 FR 35769, July 1, 1999, as amended at 68 FR 33784, June 5, 2003; 68 FR 39846, July 3, 2003; 68 FR 61369, Oct. 28, 2003; 68 FR 71014, Dec. 22, 2003; 71 FR 60632, Oct. 13, 2006]

Subpart Q—Reports

AUTHORITY: Secs. 110, 301(a), 313, 319, Clean Air Act (42 U.S.C. 7410, 7601(a), 7613, 7619).

SOURCE: 44 FR 27569, May 10, 1979, unless otherwise noted.

AIR QUALITY DATA REPORTING

§ 51.320 Annual air quality data report.

The requirements for reporting air quality data collected for purposes of the plan are located in subpart C of part 58 of this chapter.

SOURCE EMISSIONS AND STATE ACTION REPORTING

§ 51.321 Annual source emissions and State action report.

The State agency shall report to the Administrator (through the appropriate Regional Office) information as specified in §§ 51.322 through 51.326.

[67 FR 39615, June 10, 2002]

§ 51.322 Sources subject to emissions reporting.

The requirements for reporting emissions data under the plan are in subpart A of this part 51.

[67 FR 39615, June 10, 2002]

§ 51.323 Reportable emissions data and information.

The requirements for reportable emissions data and information under the plan are in subpart A of this part 51.

[67 FR 39615, June 10, 2002]

§ 51.324 Progress in plan enforcement.

(a) For each point source, the State shall report any achievement made during the reporting period of any increment of progress of compliance schedules required by:

(1) The applicable plan, or

(2) Any enforcement order or other State action required to be submitted pursuant to § 51.327.

(b) For each point source, the State shall report any enforcement action taken during the reporting period and not submitted under § 51.327 which results in civil or criminal penalties.

§ 51.326 Reportable revisions.

The State shall identify and describe all substantive plan revisions during the reporting period of the applicable plan other than revisions to rules and regulations or compliance schedules submitted in accordance with § 51.6(d). Substantive revisions shall include but are not limited to changes in stack-test procedures for determining compliance with applicable regulations, modifications in the projected total manpower needs to carry out the approved plan, and all changes in responsibilities given to local agencies to carry out various portions of the plan.

§ 51.327 Enforcement orders and other State actions.

(a) Any State enforcement order, including any State court order, must be submitted to the Administrator within 60 days of its issuance or adoption by the State.

(b) A State enforcement order or other State action must be submitted as a revision to the applicable implementation plan pursuant to § 51.104 and approved by the Administrator in order to be considered a revision to such plan.

[36 FR 22398, Nov. 25, 1971, as amended at 51 FR 40675, Nov. 7, 1986]

§ 51.328 [Reserved]

Subpart R—Extensions

§ 51.341 Request for 18-month extension.

(a) Upon request of the State made in accordance with this section, the Administrator may, whenever he determines necessary, extend, for a period not to exceed 18 months, the deadline for submitting that portion of a plan that implements a secondary standard.

(b) Any such request must show that attainment of the secondary standards will require emission reductions exceeding those which can be achieved through the application of reasonably available control technology.

(c) Any such request for extension of the deadline with respect to any State's portion of an interstate region must be submitted jointly with requests for such extensions from all other States within the region or must show that all such States have been notified of such request.

(d) Any such request must be submitted sufficiently early to permit development of a plan prior to the deadline in the event that such request is denied.

[51 FR 40675, Nov. 7, 1986]

Subpart S—Inspection/Maintenance Program Requirements

SOURCE: 57 FR 52987, Nov. 5, 1992, unless otherwise noted.

§ 51.350 Applicability.

Inspection/maintenance (I/M) programs are required in both ozone and carbon monoxide (CO) nonattainment areas, depending upon population and nonattainment classification or design value.

(a) *Nonattainment area classification and population criteria.* (1) States or areas within an ozone transport region shall implement enhanced I/M programs in any metropolitan statistical area (MSA), or portion of an MSA, within the State or area with a 1990 population of 100,000 or more as defined by the Office of Management and Budget (OMB) regardless of the area's attainment classification. In the case of a multi-state MSA, enhanced I/M shall be implemented in all ozone transport region portions if the sum of these portions has a population of 100,000 or more, irrespective of the population of the portion in the individual ozone transport region State or area.

(2) Apart from those areas described in paragraph (a)(1) of this section, any area classified as serious or worse ozone nonattainment, or as moderate or serious CO nonattainment with a design value greater than 12.7 ppm, and having a 1980 Bureau of Census-defined

(Census-defined) urbanized area population of 200,000 or more, shall implement enhanced I/M in the 1990 Census-defined urbanized area.

(3) Any area classified, as of November 5, 1992, as marginal ozone nonattainment or moderate CO nonattainment with a design value of 12.7 ppm or less shall continue operating I/M programs that were part of an approved State Implementation Plan (SIP) as of November 15, 1990, and shall update those programs as necessary to meet the basic I/M program requirements of this subpart. Any such area required by the Clean Air Act, as in effect prior to November 15, 1990, as interpreted in EPA guidance, to have an I/M program shall also implement a basic I/M program. Serious, severe and extreme ozone areas and CO areas over 12.7 ppm shall also continue operating existing I/M programs and shall upgrade such programs, as appropriate, pursuant to this subpart.

(4) Any area classified as moderate ozone nonattainment, and not required to implement enhanced I/M under paragraph (a)(1) of this section, shall implement basic I/M in any 1990 Census-defined urbanized area with a population of 200,000 or more.

(5) [Reserved]

(6) If the boundaries of a moderate ozone nonattainment area are changed pursuant to section 107(d)(4)(A)(i)-(ii) of the Clean Air Act, such that the area includes additional urbanized areas with a population of 200,000 or more, then a basic I/M program shall be implemented in these additional urbanized areas.

(7) If the boundaries of a serious or worse ozone nonattainment area or of a moderate or serious CO nonattainment area with a design value greater than 12.7 ppm are changed any time after enactment pursuant to section 107(d)(4)(A) such that the area includes additional urbanized areas, then an enhanced I/M program shall be implemented in the newly included 1990 Census-defined urbanized areas, if the 1980 Census-defined urban area population is 200,000 or more.

(8) If a marginal ozone nonattainment area, not required to implement enhanced I/M under paragraph (a)(1) of this section, is reclassified to moderate, a basic I/M program shall be implemented in the 1990 Census-defined urbanized area(s) with a population of 200,000 or more. If the area is reclassified to serious or worse, an enhanced I/M program shall be implemented in the 1990 Census-defined urbanized area, if the 1980 Census-defined urban area population is 200,000 or more.

(9) If a moderate ozone or CO nonattainment area is reclassified to serious or worse, an enhanced I/M program shall be implemented in the 1990 Census-defined urbanized area, if the 1980 Census-defined population is 200,000 or more.

(b) *Extent of area coverage.* (1) In an ozone transport region, the program shall cover all counties within subject MSAs or subject portions of MSAs, as defined by OMB in 1990, except largely rural counties having a population density of less than 200 persons per square mile based on the 1990 Census and counties with less than 1% of the population in the MSA may be excluded provided that at least 50% of the MSA population is included in the program. This provision does not preclude the voluntary inclusion of portions of an excluded county. Non-urbanized islands not connected to the mainland by roads, bridges, or tunnels may be excluded without regard to population.

(2) Outside of ozone transport regions, programs shall nominally cover at least the entire urbanized area, based on the 1990 census. Exclusion of some urban population is allowed as long as an equal number of non-urban residents of the MSA containing the subject urbanized area are included to compensate for the exclusion.

(3) Emission reduction benefits from expanding coverage beyond the minimum required urban area boundaries can be applied toward the reasonable further progress requirements or can be used for offsets, provided the covered vehicles are operated in the nonattainment area, but not toward the enhanced I/M performance standard requirement.

(4) In a multi-state urbanized area with a population of 200,000 or more that is required under paragraph (a) of this section to implement I/M, any State with a portion of the area having a 1990 Census-defined population of

50,000 or more shall implement an I/M program. The other coverage requirements in paragraph (b) of this section shall apply in multi-state areas as well.

(5) Notwithstanding the limitation in paragraph (b)(3) of this section, in an ozone transport region, States which opt for a program which meets the performance standard described in § 51.351(h) and claim in their SIP less emission reduction credit than the basic performance standard for one or more pollutants, may apply a geographic bubble covering areas in the State not otherwise subject to an I/M requirement to achieve emission reductions from other measures equal to or greater than what would have been achieved if the low enhanced performance standard were met in the subject I/M areas. Emissions reductions from non-I/M measures shall not be counted towards the OTR low enhanced performance standard.

(c) *Requirements after attainment.* All I/M programs shall provide that the program will remain effective, even if the area is redesignated to attainment status or the standard is otherwise rendered no longer applicable, until the State submits and EPA approves a SIP revision which convincingly demonstrates that the area can maintain the relevant standard(s) without benefit of the emission reductions attributable to the I/M program. The State shall commit to fully implement and enforce the program until such a demonstration can be made and approved by EPA. At a minimum, for the purposes of SIP approval, legislation authorizing the program shall not sunset prior to the attainment deadline for the applicable National Ambient Air Quality Standards (NAAQS).

(d) *SIP requirements.* The SIP shall describe the applicable areas in detail and, consistent with § 51.372 of this subpart, shall include the legal authority or rules necessary to establish program boundaries.

[57 FR 52987, Nov. 5, 1992, as amended at 60 FR 48034, Sept. 18, 1995; 61 FR 39036, July 25, 1996; 65 FR 45532, July 24, 2000]

§ 51.351 Enhanced I/M performance standard.

(a) [Reserved]

(b) *On-road testing.* The performance standard shall include on-road testing (including out-of-cycle repairs in the case of confirmed failures) of at least 0.5% of the subject vehicle population, or 20,000 vehicles whichever is less, as a supplement to the periodic inspection required in paragraphs (f), (g), and (h) of this section. Specific requirements are listed in § 51.371 of this subpart.

(c) On-board diagnostics (OBD). For those areas required to implement an enhanced I/M program prior to the effective date of designation and classifications under the 8-hour ozone standard, the performance standard shall include inspection of all model year 1996 and later light-duty vehicles and light-duty trucks equipped with certified on-board diagnostic systems, and repair of malfunctions or system deterioration identified by or affecting OBD systems as specified in § 51.357, and assuming a start date of 2002 for such testing. For areas required to implement enhanced I/M as a result of designation and classification under the 8-hour ozone standard, the performance standard defined in paragraph (i) of this section shall include inspection of all model year 2001 and later light-duty vehicles and light-duty trucks equipped with certified on-board diagnostic systems, and repair of malfunctions or system deterioration identified by or affecting OBD systems as specified in § 51.357, and assuming a start date of 4 years after the effective date of designation and classification under the 8-hour ozone standard.

(d) *Modeling requirements.* Equivalency of the emission levels which will be achieved by the I/M program design in the SIP to those of the model program described in this section shall be demonstrated using the most current version of EPA's mobile source emission model, or an alternative approved by the Administrator, using EPA guidance to aid in the estimation of input parameters. States may adopt alternative approaches that meet this performance standard. States may do so through program design changes that affect normal I/M input parameters to the mobile source emission factor model, or through program changes (such as the accelerated retirement of high emitting vehicles) that reduce in-

use mobile source emissions. If the Administrator finds, under section 182(b)(1)(A)(i) of the Act pertaining to reasonable further progress demonstrations or section 182(f)(1) of the Act pertaining to provisions for major stationary sources, that NO_X emission reductions are not beneficial in a given ozone nonattainment area, then NO_X emission reductions are not required of the enhanced I/M program, but the program shall be designed to offset NO_X increases resulting from the repair of HC and CO failures.

(e) [Reserved]

(f) *High Enhanced Performance Standard.* Enhanced I/M programs shall be designed and implemented to meet or exceed a minimum performance standard, which is expressed as emission levels in area-wide average grams per mile (gpm), achieved from highway mobile sources as a result of the program. The emission levels achieved by the State's program design shall be calculated using the most current version, at the time of submittal, of the EPA mobile source emission factor model or an alternative model approved by the Administrator, and shall meet the minimum performance standard both in operation and for SIP approval. Areas shall meet the performance standard for the pollutants which cause them to be subject to enhanced I/M requirements. In the case of ozone nonattainment areas subject to enhanced I/M and subject areas in the Ozone Transport Region, the performance standard must be met for both oxides of nitrogen (NOx) and volatile organic compounds (VOCs), except as provided in paragraph (d) of this section. Except as provided in paragraphs (g) and (h) of this section, the model program elements for the enhanced I/M performance standard shall be as follows:

(1) *Network type.* Centralized testing.

(2) *Start date.* For areas with existing I/M programs, 1983. For areas newly subject, 1995.

(3) *Test frequency.* Annual testing.

(4) *Model year coverage.* Testing of 1968 and later vehicles.

(5) *Vehicle type coverage.* Light duty vehicles, and light duty trucks, rated up to 8,500 pounds Gross Vehicle Weight Rating (GVWR).

(6) *Exhaust emission test type.* Transient mass-emission testing on 1986 and later model year vehicles using the IM240 driving cycle, two-speed testing (as described in appendix B of this subpart S) of 1981–1985 vehicles, and idle testing (as described in appendix B of this subpart S) of pre-1981 vehicles is assumed.

(7) *Emission standards.* (i) Emission standards for 1986 through 1993 model year light duty vehicles, and 1994 and 1995 light-duty vehicles not meeting Tier 1 emission standards, of 0.80 gpm hydrocarbons (HC), 20 gpm CO, and 2.0 gpm NO_X;

(ii) Emission standards for 1986 through 1993 light duty trucks less than 6000 pounds gross vehicle weight rating (GVWR), and 1994 and 1995 trucks not meeting Tier 1 emission standards, of 1.2 gpm HC, 20 gpm CO, and 3.5 gpm NO_X;

(iii) Emission standards for 1986 through 1993 light duty trucks greater than 6000 pounds GVWR, and 1994 and 1995 trucks not meeting the Tier 1 emission standards, of 1.2 gpm HC, 20 gpm CO, and 3.5 gpm NO_X;

(iv) Emission standards for 1994 and later light duty vehicles meeting Tier 1 emission standards of 0.70 gpm HC, 15 gpm CO, and 1.4 gpm NO_X;

(v) Emission standards for 1994 and later light duty trucks under 6000 pounds GVWR and meeting Tier 1 emission standards of 0.70 gpm HC, 15 gpm CO, and 2.0 gpm NO_X;

(vi) Emission standards for 1994 and later light duty trucks greater than 6000 pounds GVWR and meeting Tier 1 emission standards of 0.80 gpm HC, 15 gpm CO and 2.5 gpm NO_X;

(vii) Emission standards for 1981–1985 model year vehicles of 1.2% CO, and 220 gpm HC for the idle, two-speed tests and loaded steady-state tests (as described in appendix B of this subpart S); and

(viii) Maximum exhaust dilution measured as no less than 6% CO plus carbon dioxide (CO_2) on vehicles subject to a steady-state test (as described in appendix B of this subpart S); and

(viii) Maximum exhaust dilution measured as no less than 6% CO plus carbon dioxide (CO_2) on vehicles subject to a steady-state test (as described in appendix B of this subpart S).

(8) *Emission control device inspections.* (i) Visual inspection of the catalyst and fuel inlet restrictor on all 1984 and later model year vehicles.

(ii) Visual inspection of the positive crankcase ventilation valve on 1968 through 1971 model years, inclusive, and of the exhaust gas recirculation valve on 1972 through 1983 model year vehicles, inclusive.

(9) *Evaporative system function checks.* Evaporative system integrity (pressure) test on 1983 and later model year vehicles and an evaporative system transient purge test on 1986 and later model year vehicles.

(10) *Stringency.* A 20% emission test failure rate among pre-1981 model year vehicles.

(11) *Waiver rate.* A 3% waiver rate, as a percentage of failed vehicles.

(12) *Compliance rate.* A 96% compliance rate.

(13) *Evaluation date.* Enhanced I/M program areas subject to the provisions of this paragraph shall be shown to obtain the same or lower emission levels as the model program described in this paragraph by January 1, 2002 to within ±0.02 gpm. Subject programs shall demonstrate through modeling the ability to maintain this level of emission reduction (or better) through their attainment deadline for the applicable NAAQS standard(s).

(g) *Alternate Low Enhanced I/M Performance Standard.* An enhanced I/M area which is either not subject to or has an approved State Implementation Plan pursuant to the requirements of the Clean Air Act Amendments of 1990 for Reasonable Further Progress in 1996, and does not have a disapproved plan for Reasonable Further Progress for the period after 1996 or a disapproved plan for attainment of the air quality standards for ozone or CO, may select the alternate low enhanced I/M performance standard described below in lieu of the standard described in paragraph (f) of this section. The model program elements for this alternate low enhanced I/M performance standard are:

(1) *Network type.* Centralized testing.

(2) *Start date.* For areas with existing I/M programs, 1983. For areas newly subject, 1995.

(3) *Test frequency.* Annual testing.

(4) *Model year coverage.* Testing of 1968 and newer vehicles.

(5) *Vehicle type coverage.* Light duty vehicles, and light duty trucks, rated up to 8,500 pounds GVWR.

(6) *Exhaust emission test type.* Idle testing of all covered vehicles (as described in appendix B of subpart S).

(7) *Emission standards.* Those specified in 40 CFR part 85, subpart W.

(8) *Emission control device inspections.* Visual inspection of the positive crankcase ventilation valve on all 1968 through 1971 model year vehicles, inclusive, and of the exhaust gas recirculation valve on all 1972 and newer model year vehicles.

(9) *Evaporative system function checks.* None.

(10) *Stringency.* A 20% emission test failure rate among pre-1981 model year vehicles.

(11) *Waiver rate.* A 3% waiver rate, as a percentage of failed vehicles.

(12) *Compliance rate.* A 96% compliance rate.

(13) *Evaluation date.* Enhanced I/M program areas subject to the provisions of this paragraph (g) shall be shown to obtain the same or lower emission levels as the model program described in this paragraph by January 1, 2002 to within ±0.02 gpm. Subject programs shall demonstrate through modeling the ability to maintain this level of emission reduction (or better) through their attainment deadline for the applicable NAAQS standard(s).

(h) *Ozone Transport Region Low-Enhanced Performance Standard.* An attainment area, marginal ozone area, or moderate ozone area with a 1980 Census population of less than 200,000 in the urbanized area, in an ozone transport region, that is required to implement enhanced I/M under section 184(b)(1)(A) of the Clean Air Act, but was not previously required to or did not in fact implement basic I/M under the Clean Air Act as enacted prior to 1990 and is not subject to the requirements for basic I/M programs in this subpart, may select the performance standard described below in lieu of the standard described in paragraph (f) or (g) of this section as long as the difference in emission reductions between the program described in paragraph (g) and this paragraph are made up with other

measures, as provided in § 51.350(b)(5). Offsetting measures shall not include those otherwise required by the Clean Air Act in the areas from which credit is bubbled. The program elements for this alternate OTR enhanced I/M performance standard are:

(1) *Network type*. Centralized testing.

(2) *Start date*. January 1, 1999.

(3) *Test frequency*. Annual testing.

(4) *Model year coverage*. Testing of 1968 and newer vehicles.

(5) *Vehicle type coverage*. Light duty vehicles, and light duty trucks, rated up to 8,500 pounds GVWR.

(6) *Exhaust emission test type*. Remote sensing measurements on 1968–1995 vehicles; on-board diagnostic system checks on 1996 and newer vehicles.

(7) *Emission standards*. For remote sensing measurements, a carbon monoxide standard of 7.5% (with at least two separate readings above this level to establish a failure).

(8) *Emission control device inspections*. Visual inspection of the catalytic converter on 1975 and newer vehicles and visual inspection of the positive crankcase ventilation valve on 1968–1974 vehicles.

(9) *Waiver rate*. A 3% waiver rate, as a percentage of failed vehicles.

(10) *Compliance rate*. A 96% compliance rate.

(11) *Evaluation date*. Enhanced I/M program areas subject to the provisions of this paragraph shall be shown to obtain the same or lower VOC and NOx emission levels as the model program described in this paragraph (h) by January 1, 2002 to within ±0.02 gpm. Subject programs shall demonstrate through modeling the ability to maintain this level of emission reduction (or better) through their attainment deadline for the applicable NAAQS standard(s). Equality of substituted emission reductions to the benefits of the low enhanced performance standard must be demonstrated for the same evaluation date.

(i) *Enhanced performance standard for areas designated and classified under the 8-hour ozone standard*. Areas required to implement an enhanced I/M program as a result of being designated and classified under the 8-hour ozone standard, must meet or exceed the HC and NO_X emission reductions achieved by the model program defined as follows:

(1) *Network type*. Centralized testing.

(2) *Start date*. 4 years after the effective date of designation and classification under the 8-hour ozone standard.

(3) *Test frequency*. Annual testing.

(4) *Model year coverage*. Testing of 1968 and newer vehicles.

(5) *Vehicle type coverage*. Light duty vehicles, and light duty trucks, rated up to 8,500 pounds GVWR.

(6) *Emission test type*. Idle testing (as described in appendix B of this subpart) for 1968–2000 vehicles; onboard diagnostic checks on 2001 and newer vehicles.

(7) *Emission standards*. Those specified in 40 CFR part 85, subpart W.

(8) *Emission control device inspections*. Visual inspection of the positive crankcase ventilation valve on all 1968 through 1971 model year vehicles, inclusive, and of the exhaust gas recirculation valve on all 1972 and newer model year vehicles.

(9) *Evaporative system function checks*. None, with the exception of those performed by the OBD system on vehicles so-equipped and only for model year 2001 and newer vehicles.

(10) *Stringency*. A 20% emission test failure rate among pre-1981 model year vehicles.

(11) *Waiver rate*. A 3% waiver rate, as a percentage of failed vehicles.

(12) *Compliance rate*. A 96% compliance rate.

(13) *Evaluation date*. Enhanced I/M program areas subject to the provisions of this paragraph (i) shall be shown to obtain the same or lower emission levels for HC and NO_X as the model program described in this paragraph assuming an evaluation date set 6 years after the effective date of designation and classification under the 8-hour ozone standard (rounded to the nearest July) to within ±0.02 gpm. Subject programs shall demonstrate through modeling the ability to maintain this percent level of emission reduction (or

better) through their applicable attainment date for the 8-hour ozone standard, also rounded to the nearest July.

[57 FR 52987, Nov. 5, 1992, as amended at 58 FR 59367, Nov. 9, 1993; 59 FR 32343, June 23, 1994; 60 FR 48035, Sept. 18, 1995; 61 FR 39036, July 25, 1996; 61 FR 40945, Aug. 6, 1996; 63 FR 24433, May 4, 1998; 65 FR 45532, July 24, 2000; 66 FR 18176, Apr. 5, 2001; 71 FR 17710, Apr. 7, 2006]

§ 51.352 Basic I/M performance standard.

(a) Basic I/M programs shall be designed and implemented to meet or exceed a minimum performance standard, which is expressed as emission levels achieved from highway mobile sources as a result of the program. The performance standard shall be established using the following model I/M program inputs and local characteristics, such as vehicle mix and local fuel controls. Similarly, the emission reduction benefits of the State's program design shall be estimated using the most current version of the EPA mobile source emission model, and shall meet the minimum performance standard both in operation and for SIP approval.

(1) *Network type*. Centralized testing.

(2) *Start date*. For areas with existing I/M programs, 1983. For areas newly subject, 1994.

(3) *Test frequency*. Annual testing.

(4) *Model year coverage*. Testing of 1968 and later model year vehicles.

(5) *Vehicle type coverage*. Light duty vehicles.

(6) *Exhaust emission test type*. Idle test.

(7) *Emission standards*. No weaker than specified in 40 CFR part 85, subpart W.

(8) *Emission control device inspections*. None.

(9) *Stringency*. A 20% emission test failure rate among pre-1981 model year vehicles.

(10) *Waiver rate*. A 0% waiver rate.

(11) *Compliance rate*. A 100% compliance rate.

(12) *Evaluation date*. Basic I/M programs shall be shown to obtain the same or lower emission levels as the model inputs by 1997 for ozone nonattainment areas and 1996 for CO nonattainment areas; and, for serious or worse ozone nonattainment areas, on each applicable milestone and attainment deadline, thereafter.

(b) *Oxides of nitrogen*. Basic I/M testing in ozone nonattainment areas shall be designed such that no increase in NO_X emissions occurs as a result of the program. If the Administrator finds, under section 182(b)(1)(A)(i) of the Act pertaining to reasonable further progress demonstrations or section 182(f)(1) of the Act pertaining to provisions for major stationary sources, that NO_X emission reductions are not beneficial in a given ozone nonattainment area, then the basic I/M NO_X requirement may be omitted. States shall implement any required NO_X controls within 12 months of implementation of the program deadlines required in § 51.373 of this subpart, except that newly implemented I/M programs shall include NO_X controls from the start.

(c) On-board diagnostics (OBD). For those areas required to implement a basic I/M program prior to the effective date of designation and classification under the 8-hour ozone standard, the performance standard shall include inspection of all model year 1996 and later light-duty vehicles equipped with certified on-board diagnostic systems, and repair of malfunctions or system deterioration identified by or affecting OBD systems as specified in § 51.357, and assuming a start date of 2002 for such testing. For areas required to implement basic I/M as a result of designation and classification under the 8-hour ozone standard, the performance standard defined in paragraph (e) of this section shall include inspection of all model year 2001 and later light-duty vehicles equipped with certified on-board diagnostic systems, and repair of malfunctions or system deterioration identified by or affecting OBD systems as specified in § 51.357, and assuming a start date of 4 years after the effective date of designation and classification under the 8-hour ozone standard.

(d) *Modeling requirements*. Equivalency of emission levels which will be achieved by the I/M program design in the SIP to those of the model program described in this section shall be demonstrated using the most current version of EPA's mobile source emission model and EPA guidance on the estimation of input parameters. Areas

required to implement basic I/M programs shall meet the performance standard for the pollutants which cause them to be subject to basic requirements. Areas subject as a result of ozone nonattainment shall meet the standard for VOCs and shall demonstrate no NO_X increase, as required in paragraph (b) of this section.

(e) *Basic performance standard for areas designated non-attainment for the 8-hour ozone standard.* Areas required to implement a basic I/M program as a result of being designated and classified under the 8-hour ozone standard, must meet or exceed the emission reductions achieved by the model program defined for the applicable ozone precursor(s):

(1) *Network type.* Centralized testing.

(2) *Start date.* 4 years after the effective date of designation and classification under the 8-hour ozone standard.

(3) *Test frequency.* Annual testing.

(4) *Model year coverage.* Testing of 1968 and newer vehicles.

(5) *Vehicle type coverage.* Light duty vehicles.

(6) *Emission test type.* Idle testing (as described in appendix B of this subpart) for 1968–2000 vehicles; onboard diagnostic checks on 2001 and newer vehicles.

(7) *Emission standards.* Those specified in 40 CFR part 85, subpart W.

(8) *Emission control device inspections.* None.

(9) *Evaporative system function checks.* None, with the exception of those performed by the OBD system on vehicles so-equipped and only for model year 2001 and newer vehicles.

(10) *Stringency.* A 20% emission test failure rate among pre-1981 model year vehicles.

(11) *Waiver rate.* A 0% waiver rate, as a percentage of failed vehicles.

(12) *Compliance rate.* A 100% compliance rate.

(13) *Evaluation date.* Basic I/M program areas subject to the provisions of this paragraph (e) shall be shown to obtain the same or lower emission levels as the model program described in this paragraph by an evaluation date set 6 years after the effective date of designation and classification under the 8-hour ozone standard (rounded to the nearest July) for the applicable ozone precursor(s).

[57 FR 52987, Nov. 5, 1992, as amended at 61 FR 40945, Aug. 6, 1996; 63 FR 24433, May 4, 1998; 66 FR 18177, Apr. 5, 2001; 71 FR 17711, Apr. 7, 2006]

§ 51.353 Network type and program evaluation.

Basic and enhanced I/M programs can be centralized, decentralized, or a hybrid of the two at the State's discretion, but shall be demonstrated to achieve the same (or better) level of emission reduction as the applicable performance standard described in either § 51.351 or 51.352 of this subpart. For decentralized programs other than those meeting the design characteristics described in paragraph (a) of this section, the State must demonstrate that the program is achieving the level of effectiveness claimed in the plan within 12 months of the plan's final conditional approval before EPA can convert that approval to a final full approval. The adequacy of these demonstrations will be judged by the Administrator on a case-by-case basis through notice-and-comment rulemaking.

(a) *Presumptive equivalency.* A decentralized network consisting of stations that only perform official I/M testing (which may include safety-related inspections) and in which owners and employees of those stations, or companies owning those stations, are contractually or legally barred from engaging in motor vehicle repair or service, motor vehicle parts sales, and motor vehicle sale and leasing, either directly or indirectly, and are barred from referring vehicle owners to particular providers of motor vehicle repair services (except as provided in § 51.369(b)(1) of this subpart) shall be considered presumptively equivalent to a centralized, test-only system including comparable test elements. States may allow such stations to engage in the full range of sales not covered by the above prohibition, including self-serve gasoline, prepackaged oil, or other, non-automotive, convenience store items. At the State's discretion, such stations may also fulfill other functions typically carried out by the State such as renewal of vehicle registration and

driver's licenses, or tax and fee collections.

(b) [Reserved]

(c) *Program evaluation*. Enhanced I/M programs shall include an ongoing evaluation to quantify the emission reduction benefits of the program, and to determine if the program is meeting the requirements of the Clean Air Act and this subpart.

(1) The State shall report the results of the program evaluation on a biennial basis, starting two years after the initial start date of mandatory testing as required in § 51.373 of this subpart.

(2) The evaluation shall be considered in establishing actual emission reductions achieved from I/M for the purposes of satisfying the requirements of sections 182(g)(1) and 182(g)(2) of the Clean Air Act, relating to reductions in emissions and compliance demonstration.

(3) The evaluation program shall consist, at a minimum, of those items described in paragraph (b)(1) of this section and program evaluation data using a sound evaluation methodology, as approved by EPA, and evaporative system checks, specified in § 51.357(a)(9) and (10) of this subpart, for model years subject to those evaporative system test procedures. The test data shall be obtained from a representative, random sample, taken at the time of initial inspection (before repair) on a minimum of 0.1 percent of the vehicles subject to inspection in a given year. Such vehicles shall receive a State administered or monitored test, as specified in this paragraph (c)(3), prior to the performance of I/M-triggered repairs during the inspection cycle under consideration.

(4) The program evaluation test data shall be submitted to EPA and shall be capable of providing accurate information about the overall effectiveness of an I/M program, such evaluation to begin no later than 1 year after program start-up.

(5) Areas that qualify for and choose to implement an OTR low enhanced I/M program, as established in § 51.351(h), and that claim in their SIP less emission reduction credit than the basic performance standard for one or more pollutants, are exempt from the requirements of paragraphs (c)(1) through (c)(4) of this section. The reports required under § 51.366 of this part shall be sufficient in these areas to satisfy the requirements of Clean Air Act for program reporting.

(d) *SIP requirements*. (1) The SIP shall include a description of the network to be employed, the required legal authority, and, in the case of areas making claims under paragraph (b) of this section, the required demonstration.

(2) The SIP shall include a description of the evaluation schedule and protocol, the sampling methodology, the data collection and analysis system, the resources and personnel for evaluation, and related details of the evaluation program, and the legal authority enabling the evaluation program.

[57 FR 52987, Nov. 5, 1992, as amended at 58 FR 59367, Nov. 9, 1993; 61 FR 39037, July 25, 1996; 63 FR 1368, Jan. 9, 1998; 65 FR 45532, July 24, 2000; 71 FR 17711, Apr. 7, 2006]

§ 51.354 Adequate tools and resources.

(a) *Administrative resources*. The program shall maintain the administrative resources necessary to perform all of the program functions including quality assurance, data analysis and reporting, and the holding of hearings and adjudication of cases. A portion of the test fee or a separately assessed per vehicle fee shall be collected, placed in a dedicated fund and retained, to be used to finance program oversight, management, and capital expenditures. Alternatives to this approach shall be acceptable if the State can demonstrate that adequate funding of the program can be maintained in some other fashion (e.g., through contractual obligation along with demonstrated past performance). Reliance on future uncommitted annual or biennial appropriations from the State or local General Fund is not acceptable, unless doing otherwise would be a violation of the State's constitution. This section shall in no way require the establishment of a test fee if the State chooses to fund the program in some other manner.

(b) *Personnel*. The program shall employ sufficient personnel to effectively carry out the duties related to the program, including but not limited to administrative audits, inspector audits,

data analysis, program oversight, program evaluation, public education and assistance, and enforcement against stations and inspectors as well as against motorists who are out of compliance with program regulations and requirements.

(c) *Equipment.* The program shall possess equipment necessary to achieve the objectives of the program and meet program requirements, including but not limited to a steady supply of vehicles for covert auditing, test equipment and facilities for program evaluation, and computers capable of data processing, analysis, and reporting. Equipment or equivalent services may be contractor supplied or owned by the State or local authority.

(d) *SIP requirements.* The SIP shall include a description of the resources that will be used for program operation, and discuss how the performance standard will be met.

(1) The SIP shall include a detailed budget plan which describes the source of funds for personnel, program administration, program enforcement, purchase of necessary equipment (such as vehicles for undercover audits), and any other requirements discussed throughout, for the period prior to the next biennial self-evaluation required in § 51.366 of this subpart.

(2) The SIP shall include a description of personnel resources. The plan shall include the number of personnel dedicated to overt and covert auditing, data analysis, program administration, enforcement, and other necessary functions and the training attendant to each function.

§ 51.355 Test frequency and convenience.

(a) The performance standards for I/M programs assume an annual test frequency; other schedules may be approved if the required emission targets are achieved. The SIP shall describe the test schedule in detail, including the test year selection scheme if testing is other than annual. The SIP shall include the legal authority necessary to implement and enforce the test frequency requirement and explain how the test frequency will be integrated with the enforcement process.

(b) In enhanced I/M programs, test systems shall be designed in such a way as to provide convenient service to motorists required to get their vehicles tested. The SIP shall demonstrate that the network of stations providing test services is sufficient to insure short waiting times to get a test and short driving distances. Stations shall be required to adhere to regular testing hours and to test any subject vehicle presented for a test during its test period.

§ 51.356 Vehicle coverage.

The performance standard for enhanced I/M programs assumes coverage of all 1968 and later model year light duty vehicles and light duty trucks up to 8,500 pounds GVWR, and includes vehicles operating on all fuel types. The standard for basic I/M programs does not include light duty trucks. Other levels of coverage may be approved if the necessary emission reductions are achieved. Vehicles registered or required to be registered within the I/M program area boundaries and fleets primarily operated within the I/M program area boundaries and belonging to the covered model years and vehicle classes comprise the subject vehicles.

(a) *Subject vehicles.* (1) All vehicles of a covered model year and vehicle type shall be tested according to the applicable test schedule, including leased vehicles whose registration or titling is in the name of an equity owner other than the lessee or user.

(2) All subject fleet vehicles shall be inspected. Fleets may be officially inspected outside of the normal I/M program test facilities, if such alternatives are approved by the program administration, but shall be subject to the same test requirements using the same quality control standards as non-fleet vehicles. If all vehicles in a particular fleet are tested during one part of the cycle, then the quality control requirements shall be met during the time of testing only. Any vehicle available for rent in the I/M area or for use in the I/M area shall be subject. Fleet vehicles not being tested in normal I/M test facilities in enhanced I/M programs, however, shall be inspected in

independent, test-only facilities, according to the requirements of § 51.353(a) of this subpart.

(3) Subject vehicles which are registered in the program area but are primarily operated in another I/M area shall be tested, either in the area of primary operation, or in the area of registration. Alternate schedules may be established to permit convenient testing of these vehicles (e.g., vehicles belonging to students away at college should be rescheduled for testing during a visit home). I/M programs shall make provisions for providing official testing to vehicles registered elsewhere.

(4) Vehicles which are operated on Federal installations located within an I/M program area shall be tested, regardless of whether the vehicles are registered in the State or local I/M area. This requirement applies to all employee-owned or leased vehicles (including vehicles owned, leased, or operated by civilian and military personnel on Federal installations) as well as agency-owned or operated vehicles, except tactical military vehicles, operated on the installation. This requirement shall not apply to visiting agency, employee, or military personnel vehicles as long as such visits do not exceed 60 calendar days per year. In areas without test fees collected in the lane, arrangements shall be made by the installation with the I/M program for reimbursement of the costs of tests provided for agency vehicles, at the discretion of the I/M agency. The installation shall provide documentation of proof of compliance to the I/M agency. The documentation shall include a list of subject vehicles and shall be updated periodically, as determined by the I/M program administrator, but no less frequently than each inspection cycle. The installation shall use one of the following methods to establish proof of compliance:

(i) Presentation of a valid certificate of compliance from the local I/M program, from any other I/M program at least as stringent as the local program, or from any program deemed acceptable by the I/M program administrator.

(ii) Presentation of proof of vehicle registration within the geographic area covered by the I/M program, except for any program whose enforcement is not through registration denial.

(iii) Another method approved by the State or local I/M program administrator.

(5) Special exemptions may be permitted for certain subject vehicles provided a demonstration is made that the performance standard will be met.

(6) States may also exempt MY 1996 and newer OBD-equipped vehicles that receive an OBD-I/M inspection from the tailpipe, purge, and fill-neck pressure tests (where applicable) without any loss of emission reduction credit.

(b) *SIP requirements*. (1) The SIP shall include a detailed description of the number and types of vehicles to be covered by the program, and a plan for how those vehicles are to be identified, including vehicles that are routinely operated in the area but may not be registered in the area.

(2) The SIP shall include a description of any special exemptions which will be granted by the program, and an estimate of the percentage and number of subject vehicles which will be impacted. Such exemptions shall be accounted for in the emission reduction analysis.

(3) The SIP shall include the legal authority or rule necessary to implement and enforce the vehicle coverage requirement.

[57 FR 52987, Nov. 5, 1992, as amended at 66 FR 18177, Apr. 5, 2001]

§ 51.357 Test procedures and standards.

Written test procedures and pass/fail standards shall be established and followed for each model year and vehicle type included in the program.

(a) *Test procedure requirements*. Emission tests and functional tests shall be conducted according to good engineering practices to assure test accuracy.

(1) Initial tests (*i.e.*, those occurring for the first time in a test cycle) shall be performed without repair or adjustment at the inspection facility, prior to the test, except as provided in paragraph (a)(10)(i) of this section.

(2) The vehicle owner or driver shall have access to the test area such that observation of the entire official inspection process on the vehicle is permitted. Such access may be limited but

shall in no way prevent full observation.

(3) An official test, once initiated, shall be performed in its entirety regardless of intermediate outcomes except in the case of invalid test condition, unsafe conditions, fast pass/fail algorithms, or, in the case of the on-board diagnostic (OBD) system check, unset readiness codes.

(4) Tests involving measurement shall be performed with program-approved equipment that has been calibrated according to the quality procedures contained in appendix A to this subpart.

(5) Vehicles shall be rejected from testing if the exhaust system is missing or leaking, or if the vehicle is in an unsafe condition for testing. Coincident with mandatory OBD-I/M testing and repair of vehicles so equipped, MY 1996 and newer vehicles shall be rejected from testing if a scan of the OBD system reveals a ''not ready'' code for any component of the OBD system. At a state's option it may choose alternatively to reject MY 1996–2000 vehicles only if three or more ''not ready'' codes are present and to reject MY 2001 and later model years only if two or more ''not ready'' codes are present. This provision does not release manufacturers from the obligations regarding readiness status set forth in 40 CFR 86.094–17(e)(1): ''Control of Air Pollution From New Motor Vehicles and New Motor Vehicle Engines: Regulations RequiringOn-Board Diagnostic Systems on 1994 and Later Model Year Light-Duty Vehicles and Light-Duty Trucks.'' Once the cause for rejection has been corrected, the vehicle must return for testing to continue the testing process. Failure to return for testing in a timely manner after rejection shall be considered non-compliance with the program, unless the motorist can prove that the vehicle has been sold, scrapped, or is otherwise no longer in operation within the program area.

(6) Vehicles shall be retested after repair for any portion of the inspection that is failed on the previous test to determine if repairs were effective. To the extent that repair to correct a previous failure could lead to failure of another portion of the test, that portion shall also be retested. Evaporative system repairs shall trigger an exhaust emissions retest (in programs which conduct an exhaust emission test as part of the initial inspection).

(7) *Steady-state testing.* Steady-state tests shall be performed in accordance with the procedures contained in appendix B to this subpart.

(8) *Emission control device inspection.* Visual emission control device checks shall be performed through direct observation or through indirect observation using a mirror, video camera or other visual aid. These inspections shall include a determination as to whether each subject device is present and appears to be properly connected and appears to be the correct type for the certified vehicle configuration.

(9) *Evaporative system purge test procedure.* The purge test procedure shall consist of measuring the total purge flow (in standard liters) occurring in the vehicle's evaporative system during the transient dynamometer emission test specified in paragraph (a)(11) of this section. The purge flow measurement system shall be connected to the purge portion of the evaporative system in series between the canister and the engine, preferably near the canister. The inspector shall be responsible for ensuring that all items that are disconnected in the conduct of the test procedure are properly re-connected at the conclusion of the test procedure. Alternative procedures may be used if they are shown to be equivalent or better to the satisfaction of the Administrator. Except in the case of government-run test facilities claiming sovereign immunity, any damage done to the evaporative emission control system during this test shall be repaired at the expense of the inspection facility.

(10) *Evaporative system integrity test procedure.* The test sequence shall consist of the following steps:

(i) Test equipment shall be connected to the fuel tank canister hose at the canister end. The gas cap shall be checked to ensure that it is properly, but not excessively tightened, and shall be tightened if necessary.

(ii) The system shall be pressurized to 14 ±0.5 inches of water without exceeding 26 inches of water system pressure.

(iii) Close off the pressure source, seal the evaporative system and monitor pressure decay for up to two minutes.

(iv) Loosen the gas cap after a maximum of two minutes and monitor for a sudden pressure drop, indicating that the fuel tank was pressurized.

(v) The inspector shall be responsible for ensuring that all items that are disconnected in the conduct of the test procedure are properly re-connected at the conclusion of the test procedure.

(vi) Alternative procedures may be used if they are shown to be equivalent or better to the satisfaction of the Administrator. Except in the case of government-run test facilities claiming sovereign immunity, any damage done to the evaporative emission control system during this test shall be repaired at the expense of the inspection facility.

(11) *Transient emission test*. The transient emission test shall consist of mass emission measurement using a constant volume sampler (or an Administrator-approved alternative methodology for accounting for exhaust volume) while the vehicle is driven through a computer-monitored driving cycle on a dynamometer. The driving cycle shall include acceleration, deceleration, and idle operating modes as specified in appendix E to this subpart (or an approved alternative). The driving cycle may be ended earlier using approved fast pass or fast fail algorithms and multiple pass/fail algorithms may be used during the test cycle to eliminate false failures. The transient test procedure, including algorithms and other procedural details, shall be approved by the Administrator prior to use in an I/M program.

(12) *On-board diagnostic checks*. Beginning January 1, 2002, inspection of the on-board diagnostic (OBD) system on MY 1996 and newer light-duty vehicles and light-duty trucks shall be conducted according to the procedure described in 40 CFR 85.2222, at a minimum. This inspection may be used in lieu of tailpipe, purge, and fill-neck pressure testing. Alternatively, states may elect to phase-in OBD-I/M testing for one test cycle by using the OBD-I/M check to screen clean vehicles from tailpipe testing and require repair and retest for only those vehicles which proceed to fail the tailpipe test. An additional alternative is also available to states with regard to the deadline for mandatory testing, repair, and retesting of vehicles based upon the OBD-I/M check. Under this third option, if a state can show good cause (and the Administrator takes notice-and-comment action to approve this good cause showing as a revision to the State's Implementation Plan), up to an additional 12 months' extensionmay be granted, establishing an alternative start date for such states of no later than January 1, 2003. States choosing to make this showing will also have available to them the phase-in approach described in this section, with the one-cycle time limit to begin coincident with the alternative start date established by Administrator approval of the showing, but no later than January 1, 2003. The showing of good cause (and its approval or disapproval) will be addressed on a case-by-case basis by the Administrator.

(13) *Approval of alternative tests*. Alternative test procedures may be approved if the Administrator finds that such procedures show a reasonable correlation with the Federal Test Procedure and are capable of identifying comparable emission reductions from the I/M program as a whole, in combination with other program elements, as would be identified by the test(s) which they are intended to replace.

(b) *Test standards*—(1) *Emissions standards*. HC, CO, and $CO+CO_2$ (or CO_2 alone) emission standards shall be applicable to all vehicles subject to the program with the exception of MY 1996 and newer OBD-equipped light-duty vehicles and light-duty trucks, which will be held to the requirements of 40 CFR 85.2207, at a minimum. Repairs shall be required for failure of any standard regardless of the attainment status of the area. NO_X emission standards shall be applied to vehicles subject to a loaded mode test in ozone nonattainment areas and in an ozone transport region, unless a waiver of NO_X controls is provided to the State under § 51.351(d).

(2) *Visual equipment inspection standards.* (i) Vehicles shall fail visual inspections of subject emission control devices if such devices are part of the original certified configuration and are found to be missing, modified, disconnected, or improperly connected.

(ii) Vehicles shall fail visual inspections of subject emission control devices if such devices are found to be incorrect for the certified vehicle configuration under inspection. Aftermarket parts, as well as original equipment manufacture parts, may be considered correct if they are proper for the certified vehicle configuration. Where an EPA aftermarket approval or self-certification program exists for a particular class of subject parts, vehicles shall fail visual equipment inspections if the part is neither original equipment manufacture nor from an approved or self-certified aftermarket manufacturer.

(3) *Functional test standards*—(i) *Evaporative system integrity test.* Vehicles shall fail the evaporative system pressure test if the system cannot maintain a system pressure above eight inches of water for up to two minutes after being pressurized to 14 ±0.5 inches of water or if no pressure drop is detected when the gas cap is loosened as described in paragraph (a)(10)(iv) of this section. Additionally, vehicles shall fail the evaporative test if the canister is missing or obviously damaged, if hoses are missing or obviously disconnected, or if the gas cap is missing.

(ii) *Evaporative canister purge test.* Vehicles with a total purge system flow measuring less than one liter, over the course of the transient test required in paragraph (a)(9) of this section, shall fail the evaporative purge test.

(4) *On-board diagnostic test standards.* Vehicles shall fail the on-board diagnostic test if they fail to meet the requirements of 40 CFR 85.2207, at a minimum. Failure of the on-board diagnostic test need not result in failure of the vehicle inspection/maintenance test until January 1, 2002. Alternatively, states may elect to phase-in OBD-I/M testing for one test cycle by using the OBD- I/M check to screen clean vehicles from tailpipe testing and require repair and retest for only those vehicles which proceed to fail the tailpipe test. An additional alternative is also available to states with regard to the deadline for mandatory testing, repair, and retesting of vehicles based upon the OBD-I/M check. Under this third option, if a state can show good cause (and the Administrator takes notice-and-comment action to approve this good cause showing), up to an additional 12 months' extension may be granted, establishing an alternative start date for such states of no later than January 1, 2003. States choosing to make this showing will also have available to them the phase-in approach described in this section, with the one-cycle time limit to begin coincident with the alternative start date established by Administrator approval of the showing, but no later than January 1, 2003. The showing of good cause (and its approval or disapproval) will be addressed on a case-by-case basis.

(c) *Fast test algorithms and standards.* Special test algorithms and pass/fail algorithms may be employed to reduce test time when the test outcome is predictable with near certainty, if the Administrator approves by letter the equivalency to full procedure testing.

(d) *Applicability.* In general, section 203(a)(3)(A) of the Clean Air Act prohibits altering a vehicle's configuration such that it changes from a certified to a non-certified configuration. In the inspection process, vehicles that have been altered from their original certified configuration are to be tested in the same manner as other subject vehicles with the exception of MY 1996 and newer, OBD-equipped vehicles on which the data link connector is missing, has been tampered with or which has been altered in such a way as to make OBD system testing impossible. Such vehicles shall be failed for the on-board diagnostics portion of the test and are expected to be repaired so that the vehicle is testable. Failure to return for retesting in a timely manner after failure and repair shall be considered non-compliance with the program, unless the motorist can prove that the vehicle has been sold, scrapped, or is otherwise no longer in operation within the program area.

(1) Vehicles with engines other than the engine originally installed by the

manufacturer or an identical replacement of such engine shall be subject to the test procedures and standards for the chassis type and model year including visual equipment inspections for all parts that are part of the original or now-applicable certified configuration and part of the normal inspection. States may choose to require vehicles with such engines to be subject to the test procedures and standards for the engine model year if it is newer than the chassis model year.

(2) Vehicles that have been switched from an engine of one fuel type to another fuel type that is subject to the program (e.g., from a diesel engine to a gasoline engine) shall be subject to the test procedures and standards for the current fuel type, and to the requirements of paragraph (d)(1) of this section.

(3) Vehicles that are switched to a fuel type for which there is no certified configuration shall be tested according to the most stringent emission standards established for that vehicle type and model year. Emission control device requirements may be waived if the program determines that the alternatively fueled vehicle configuration would meet the new vehicle standards for that model year without such devices.

(4) Mixing vehicle classes (e.g., light-duty with heavy-duty) and certification types (e.g., California with Federal) within a single vehicle configuration shall be considered tampering.

(e) *SIP requirements*. The SIP shall include a description of each test procedure used. The SIP shall include the rule, ordinance or law describing and establishing the test procedures.

[57 FR 52987, Nov. 5, 1992, as amended at 61 FR 40945, Aug. 6, 1996; 63 FR 24433, May 4, 1998; 65 FR 45533, July 24, 2000; 66 FR 18178, Apr. 5, 2001]

§ 51.358 Test equipment.

Computerized emission test systems are required for performing an official emissions test on subject vehicles.

(a) *Performance features of computerized emission test systems*. The emission test equipment shall be certified by the program, and newly acquired emission test systems shall be subjected to acceptance test procedures to ensure compliance with program specifications.

(1) Emission test equipment shall be capable of testing all subject vehicles and shall be updated from time to time to accommodate new technology vehicles as well as changes to the program. In the case of OBD-based testing, the equipment used to access the onboard computer shall be capable of testing all MY 1996 and newer, OBD-equipped light-duty vehicles and light-duty trucks.

(2) At a minimum, emission test equipment:

(i) Shall make automatic pass/fail decisions;

(ii) Shall be secured from tampering and/or abuse;

(iii) Shall be based upon written specifications; and

(iv) Shall be capable of simultaneously sampling dual exhaust vehicles in the case of tailpipe-based emission test equipment.

(3) The vehicle owner or driver shall be provided with a record of test results, including all of the items listed in 40 CFR part 85, subpart W as being required on the test record (as applicable). The test report shall include:

(i) A vehicle description, including license plate number, vehicle identification number, and odometer reading;

(ii) The date and time of test;

(iii) The name or identification number of the individual(s) performing the tests and the location of the test station and lane;

(iv) The type(s) of test(s) performed;

(v) The applicable test standards;

(vi) The test results, by test, and, where applicable, by pollutant;

(vii) A statement indicating the availability of warranty coverage as required in section 207 of the Clean Air Act;

(viii) Certification that tests were performed in accordance with the regulations and, in the case of decentralized programs, the signature of the individual who performed the test; and

(ix) For vehicles that fail the emission test, information on the possible cause(s) of the failure.

(b) *Functional characteristics of computerized emission test systems*. The test system is composed of motor vehicle

test equipment controlled by a computerized processor and shall make automatic pass/fail decisions.

(1) [Reserved]

(2) Test systems in enhanced I/M programs shall include a real-time data link to a host computer that prevents unauthorized multiple initial tests on the same vehicle in a test cycle and to insure test record accuracy. For areas which have demonstrated the ability to meet their other, non-I/M Clean Air Act requirements without relying on emission reductions from the I/M program (and which have also elected to employ stand-alone test equipment as part of the I/M program), such areas may adopt alternative methods for preventing multiple initial tests, subject to approval by the Administrator.

(3) [Reserved]

(4) *On-board diagnostic test equipment requirements*. The test equipment used to perform on-board diagnostic inspections shall function as specified in 40 CFR 85.2231.

(c) *SIP requirements*. The SIP shall include written technical specifications for all test equipment used in the program and shall address each of the above requirements (as applicable). The specifications shall describe the testing process, the necessary test equipment, the required features, and written acceptance testing criteria and procedures.

[57 FR 52987, Nov. 5, 1992, as amended at 61 FR 40945, Aug. 6, 1996; 65 FR 45533, July 24, 2000; 66 FR 18178, Apr. 5, 2001]

§ 51.359 Quality control.

Quality control measures shall insure that emission testing equipment is calibrated and maintained properly, and that inspection, calibration records, and control charts are accurately created, recorded and maintained (where applicable).

(a) *General requirements*. (1) The practices described in this section and in appendix A to this subpart shall be followed for those tests (or portions of tests) which fall into the testing categories identified. Alternatives or exceptions to these procedures or frequencies may be approved by the Administrator based on a demonstration of comparable performance.

(2) Preventive maintenance on all inspection equipment necessary to insure accurate and repeatable operation shall be performed on a periodic basis.

(3) [Reserved]

(b) *Requirements for steady-state emissions testing equipment*. (1) Equipment shall be maintained according to demonstrated good engineering practices to assure test accuracy. The calibration and adjustment requirements in appendix A to this subpart shall apply to all steady-state test equipment. States may adjust calibration schedules and other quality control frequencies by using statistical process control to monitor equipment performance on an ongoing basis.

(2) For analyzers that use ambient air as zero air, provision shall be made to draw the air from outside the inspection bay or lane in which the analyzer is situated.

(3) The analyzer housing shall be constructed to protect the analyzer bench and electrical components from ambient temperature and humidity fluctuations that exceed the range of the analyzer's design specifications.

(4) Analyzers shall automatically purge the analytical system after each test.

(c) *Requirements for transient exhaust emission test equipment*. Equipment shall be maintained according to demonstrated good engineering practices to assure test accuracy. Computer control of quality assurance checks and quality control charts shall be used whenever possible. Exceptions to the procedures and the frequency of the checks described in appendix A of this subpart may be approved by the Administrator based on a demonstration of comparable performance.

(d) *Requirements for evaporative system functional test equipment*. Equipment shall be maintained according to demonstrated good engineering practices to assure test accuracy. Computer control of quality assurance checks and quality control charts shall be used whenever possible. Exceptions to the procedures and the frequency of the checks described in appendix A of this subpart may be approved by the Administrator based on a demonstration of comparable performance.

(e) *Document security*. Measures shall be taken to maintain the security of all documents by which compliance with the inspection requirement is established including, but not limited to inspection certificates, waiver certificates, license plates, license tabs, and stickers. This section shall in no way require the use of paper documents but shall apply if they are used by the program for these purposes.

(1) Compliance documents shall be counterfeit resistant. Such measures as the use of special fonts, water marks, ultra-violet inks, encoded magnetic strips, unique bar-coded identifiers, and difficult to acquire materials may be used to accomplish this requirement.

(2) All inspection certificates, waiver certificates, and stickers shall be printed with a unique serial number and an official program seal.

(3) Measures shall be taken to ensure that compliance documents cannot be stolen or removed without being damaged.

(f) *SIP requirements*. The SIP shall include a description of quality control and record keeping procedures. The SIP shall include the procedure manual, rule, ordinance or law describing and establishing the quality control procedures and requirements.

[57 FR 52987, Nov. 5, 1992, as amended at 58 FR 59367, Nov. 9, 1993; 65 FR 45533, July 24, 2000]

§ 51.360 Waivers and compliance via diagnostic inspection.

The program may allow the issuance of a waiver, which is a form of compliance with the program requirements that allows a motorist to comply without meeting the applicable test standards, as long as the prescribed criteria described below are met.

(a) *Waiver issuance criteria*. The waiver criteria shall include the following at a minimum.

(1) Waivers shall be issued only after a vehicle has failed a retest performed after all qualifying repairs have been completed. Qualifying repairs include repairs of the emission control components, listed in paragraph (a)(5) of this section, performed within 60 days of the test date.

(2) Any available warranty coverage shall be used to obtain needed repairs before expenditures can be counted towards the cost limits in paragraphs (a)(5) and (a)(6) of this section. The operator of a vehicle within the statutory age and mileage coverage under section 207(b) of the Clean Air Act shall present a written denial of warranty coverage from the manufacturer or authorized dealer for this provision to be waived for approved tests applicable to the vehicle.

(3) Waivers shall not be issued to vehicles for tampering-related repairs. The cost of tampering-related repairs shall not be applicable to the minimum expenditure in paragraphs (a)(5) and (a)(6) of this section. States may issue exemptions for tampering-related repairs if it can be verified that the part in question or one similar to it is no longer available for sale.

(4) Repairs shall be appropriate to the cause of the test failure, and a visual check shall be made to determine if repairs were actually made if, given the nature of the repair, it can be visually confirmed. Receipts shall be submitted for review to further verify that qualifying repairs were performed.

(5) General repairs shall be performed by a recognized repair technician (*i.e.*, one professionally engaged in vehicle repair, employed by a going concern whose purpose is vehicle repair, or possessing nationally recognized certification for emission-related diagnosis and repair) in order to qualify for a waiver. I/M programs may allow the cost of parts (not labor) utilized by non-technicians (e.g., owners) to apply toward the waiver limit. The waiver would apply to the cost of parts for the repair or replacement of the following list of emission control components: oxygen sensor, catalytic converter, thermal reactor, EGR valve, fuel filler cap, evaporative canister, PCV valve, air pump, distributor, ignition wires, coil, and spark plugs. The cost of any hoses, gaskets, belts, clamps, brackets or other accessories directly associated with these components may also be applied to the waiver limit.

(6) In basic programs, a minimum of $75 for pre-81 vehicles and $200 for 1981 and newer vehicles shall be spent in order to qualify for a waiver. These

model year cutoffs and the associated dollar limits shall be in full effect by January 1, 1998, or coincident with program start-up, whichever is later. Prior to January 1, 1998, States may adopt any minimum expenditure commensurate with the waiver rate committed to for the purposes of modeling compliance with the basic I/M performance standard.

(7) Beginning on January 1, 1998, enhanced I/M programs shall require the motorist to make an expenditure of at least $450 in repairs to qualify for a waiver. The I/M program shall provide that the $450 minimum expenditure shall be adjusted in January of each year by the percentage, if any, by which the Consumer Price Index for the preceding calendar year differs from the Consumer Price Index of 1989. Prior to January 1, 1998, States may adopt any minimum expenditure commensurate with the waiver rate committed to for the purposes of modeling compliance with the relevant enhanced I/M performance standard.

(i) The Consumer Price Index for any calendar year is the average of the Consumer Price Index for all-urban consumers published by the Department of Labor, as of the close of the 12-month period ending on August 31 of each calendar year. A copy of the current Consumer Price Index may be obtained from the Emission Planning and Strategies Division, U.S. Environmental Protection Agency, 2565 Plymouth Road, Ann Arbor, Michigan 48105.

(ii) The revision of the Consumer Price Index which is most consistent with the Consumer Price Index for calendar year 1989 shall be used.

(8) States may establish lower minimum expenditures if a program is established to scrap vehicles that do not meet standards after the lower expe nditure is made.

(9) A time extension, not to exceed the period of the inspection frequency, may be granted to obtain needed repairs on a vehicle in the case of economic hardship when waiver requirements have not been met. After having received a time extension, a vehicle must fully pass the applicable test standards before becoming eligible for another time extension. The extension for a vehicle shall be tracked and reported by the program.

(b) *Compliance via diagnostic inspection.* Vehicles subject to a transient IM240 emission test at the cutpoints established in §§ 51.351 (f)(7) and (g)(7) of this subpart may be issued a certificate of compliance without meeting the prescribed emission cutpoints, if, after failing a retest on emissions, a complete, documented physical and functional diagnosis and inspection performed by the I/M agency or a contractor to the I/M agency show that no additional emission-related repairs are needed. Any such exemption policy and procedures shall be subject to approval by the Administrator.

(c) *Quality control of waiver issuance.* (1) Enhanced programs shall control waiver issuance and processing by establishing a system of agency-issued waivers. The State may delegate this authority to a single contractor but inspectors in stations and lanes shall not issue waivers. Basic programs may permit inspector-issued waivers as long as quality assurance efforts include a comprehensive review of waiver issuance.

(2) The program shall include methods of informing vehicle owners or lessors of potential warranty coverage, and ways to obtain warranty repairs.

(3) The program shall insure that repair receipts are authentic and cannot be revised or reused.

(4) The program shall insure that waivers are only valid for one test cycle.

(5) The program shall track, manage, and account for time extensions or exemptions so that owners or lessors cannot receive or retain a waiver improperly.

(d) *SIP requirements.* (1) The SIP shall include a maximum waiver rate expressed as a percentage of initially failed vehicles. This waiver rate shall be used for estimating emission reduction benefits in the modeling analysis.

(2) The State shall take corrective action if the waiver rate exceeds that committed to in the SIP or revise the SIP and the emission reductions claimed.

(3) The SIP shall describe the waiver criteria and procedures, including cost

limits, quality assurance methods and measures, and administration.

(4) The SIP shall include the necessary legal authority, ordinance, or rules to issue waivers, set and adjust cost limits as required in paragraph (a)(5) of this section, and carry out any other functions necessary to administer the waiver system, including enforcement of the waiver provisions.

[57 FR 52987, Nov. 5, 1992, as amended at 58 FR 59367, Nov. 9, 1993; 60 FR 48036, Sept. 18, 1995; 71 FR 17711, Apr. 7, 2006]

§ 51.361 Motorist compliance enforcement.

Compliance shall be ensured through the denial of motor vehicle registration in enhanced I/M programs unless an exception for use of an existing alternative is approved. An enhanced I/M area may use an existing alternative if it demonstrates that the alternative has been more effective than registration denial. An enforcement mechanism may be considered an ''existing alternative'' only in States that, for some area in the State, had an I/M program with that mechanism in operation prior to passage of the 1990 Amendments to the Act. A basic I/M area may use an alternative enforcement mechanism if it demonstrates that the alternative will be as effective as registration denial. Two other types of enforcement programs may qualify for enhanced I/M programs if demonstrated to have been more effective than enforcement of the registration requirement in the past: Sticker-based enforcement programs and computer-matching programs. States that did not adopt an I/M program for any area of the State before November 15, 1990, may not use an enforcement alternative in connection with an enhanced I/M program required to be adopted after that date.

(a) *Registration denial.* Registration denial enforcement is defined as rejecting an application for initial registration or reregistration of a used vehicle (*i.e.*, a vehicle being registered after the initial retail sale and associated registration) unless the vehicle has complied with the I/M requirement prior to granting the application. Pursuant to section 207(g)(3) of the Act, nothing in this subpart shall be construed to require that new vehicles shall receive emission testing prior to initial retail sale. In designing its enforcement program, the State shall:

(1) Provide an external, readily visible means of determining vehicle compliance with the registration requirement to facilitate enforcement of the program;

(2) Adopt a schedule of testing (either annual or biennial) that clearly determines when a vehicle shall comply prior to registration;

(3) Design a testing certification mechanism (either paper-based or electronic) that shall be used for registration purposes and clearly indicates whether the certification is valid for purposes of registration, including:

(i) Expiration date of the certificate;

(ii) Unambiguous vehicle identification information; and

(iii) Whether the vehicle passed or received a waiver;

(4) Routinely issue citations to motorists with expired or missing license plates, with either no registration or an expired registration, and with no license plate decals or expired decals, and provide for enforcement officials other than police to issue citations (e.g., parking meter attendants) to parked vehicles in noncompliance;

(5) Structure the penalty system to deter non-compliance with the registration requirement through the use of mandatory minimum fines (meaning civil, monetary penalties, in this subpart) constituting a meaningful deterrent and through a requirement that compliance be demonstrated before a case can be closed;

(6) Ensure that evidence of testing is available and checked for validity at the time of a new registration of a used vehicle or registration renewal;

(7) Prevent owners or lessors from avoiding testing through manipulation of the title or registration system; title transfers may re-start the clock on the inspection cycle only if proof of current compliance is required at title transfer;

(8) Prevent the fraudulent initial classification or reclassification of a vehicle from subject to non-subject or exempt by requiring proof of address changes prior to registration record modification, and documentation from

the testing program (or delegate) certifying based on a physical inspection that the vehicle is exempt;

(9) Limit and track the use of time extensions of the registration requirement to prevent repeated extensions;

(10) Provide for meaningful penalties for cases of registration fraud;

(11) Limit and track exemptions to prevent abuse of the exemption policy for vehicles claimed to be out-of-state; and

(12) Encourage enforcement of vehicle registration transfer requirements when vehicle owners move into the I/M area by coordinating with local and State enforcement agencies and structuring other activities (e.g., drivers license issuance) to effect registration transfers.

(b) *Alternative enforcement mechanisms*—(1) *General requirements*. The program shall demonstrate that a non-registration-based enforcement program is currently more effective than registration-denial enforcement in enhanced I/M programs or, prospectively, as effective as registration denial in basic programs. The following general requirements shall apply:

(i) For enhanced I/M programs, the area in question shall have had an operating I/M program using the alternative mechanism prior to enactment of the Clean Air Act Amendments of 1990. While modifications to improve compliance may be made to the program that was in effect at the time of enactment, the expected change in effectiveness cannot be considered in determining acceptability;

(ii) The State shall assess the alternative program's effectiveness, as well as the current effectiveness of the registration system, including the following:

(A) Determine the number and percentage of vehicles subject to the I/M program that were in compliance with the program over the course of at least one test cycle; and

(B) Determine the number and fraction of the same group of vehicles as in paragraph (b)(1)(ii)(A) of this section that were in compliance with the registration requirement over the same period. Late registration shall not be considered non-compliance for the purposes of this determination. The precise definition of late registration versus a non-complying vehicle shall be explained and justified in the SIP;

(iii) An alternative mechanism shall be considered more effective if the fraction of vehicles complying with the existing program, as determined according to the requirements of this section, is greater than the fraction of vehicles complying with the registration requirement. An alternative mechanism is as effective if the fraction complying with the program is at least equal to the fraction complying with the registration requirement.

(2) *Sticker-based enforcement*. In addition to the general requirements, a sticker-based enforcement program shall demonstrate that the enforcement mechanism will swiftly and effectively prevent operation of subject vehicles that fail to comply. Such demonstration shall include the following:

(i) An assessment of the current extent of the following forms of non-compliance and demonstration that mechanisms exist to keep such non-compliance within acceptable limits:

(A) Use of stolen, counterfeit, or fraudulently obtained stickers;

(B) In States with safety inspections, the use of ''Safety Inspection Only'' stickers on vehicles that should be subject to the I/M requirement as well; and

(C) Operation of vehicles with expired stickers, including a stratification of non-compliance by length of non-compliance and model year.

(ii) The program as currently implemented or as proposed to be improved shall also:

(A) Require an easily observed external identifier such as the county name on the license plate, an obviously unique license plate tab, or other means that shows whether or not a vehicle is subject to the I/M requirement;

(B) Require an easily observed external identifier, such as a windshield sticker or license plate tab that shows whether a subject vehicle is in compliance with the inspection requirement;

(C) Impose monetary fines at least as great as the estimated cost of compliance with I/M requirements (e.g., test fee plus minimum waiver expenditure) for the absence of such identifiers;

(D) Require that such identifiers be of a quality that makes them difficult

to counterfeit, difficult to remove without destroying once installed, and durable enough to last until the next inspection without fading, peeling, or other deterioration;

(E) Perform surveys in a variety of locations and at different times for the presence of the required identifiers such that at least 10% of the vehicles or 10,000 vehicles (whichever is less) in the subject vehicle population are sampled each year;

(F) Track missing identifiers for all inspections performed at each station, with stations being held accountable for all such identifiers they are issued; and

(G) Assess and collect significant fines for each identifier that is unaccounted for by a station.

(3) *Computer matching*. In addition to the general requirements, computer-matching programs shall demonstrate that the enforcement mechanism will swiftly and effectively prevent operation of subject vehicles that fail to comply. Such demonstration shall:

(i) Require an expeditious system that results in at least 90% of the subject vehicles in compliance within 4 months of the compliance deadline;

(ii) Require that subject vehicles be given compliance deadlines based on the regularly scheduled test date, not the date of previous compliance;

(iii) Require that motorists pay monetary fines at least as great as the estimated cost of compliance with I/M requirements (e.g., test fee plus minimum waiver expenditure) for the continued operation of a noncomplying vehicle beyond 4 months of the deadline;

(iv) Require that continued non-compliance will eventually result in preventing operation of the non-complying vehicle (no later than the date of the next test cycle) through, at a minimum, suspension of vehicle registration and subsequent denial of re-registration;

(v) Demonstrate that the computer system currently in use is adequate to store and manipulate the I/M vehicle database, generate computerized notices, and provide regular backup to said system while maintaining auxiliary storage devices to insure ongoing operation of the system and prevent data losses;

(vi) Track each vehicle through the steps taken to ensure compliance, including:

(A) The compliance deadline;

(B) The date of initial notification;

(C) The dates warning letters are sent to non-complying vehicle owners;

(D) The dates notices of violation or other penalty notices are sent; and

(E) The dates and outcomes of other steps in the process, including the final compliance date;

(vii) Compile and report monthly summaries including statistics on the percentage of vehicles at each stage in the enforcement process; and

(viii) Track the number and percentage of vehicles initially identified as requiring testing but which are never tested as a result of being junked, sold to a motorist in a non-I/M program area, or for some other reason.

(c) *SIP requirements*. (1) The SIP shall provide information concerning the enforcement process, including:

(i) A description of the existing compliance mechanism if it is to be used in the future and the demonstration that it is as effective or more effective than registration-denial enforcement;

(ii) An identification of the agencies responsible for performing each of the applicable activities in this section;

(iii) A description of and accounting for all classes of exempt vehicles; and

(iv) A description of the plan for testing fleet vehicles, rental car fleets, leased vehicles, and any other subject vehicles, e.g., those operated in (but not necessarily registered in) the program area.

(2) The SIP shall include a determination of the current compliance rate based on a study of the system that includes an estimate of compliance losses due to loopholes, counterfeiting, and unregistered vehicles. Estimates of the effect of closing such loopholes and otherwise improving the enforcement mechanism shall be supported with detailed analyses.

(3) The SIP shall include the legal authority to implement and enforce the program.

(4) The SIP shall include a commitment to an enforcement level to be

used for modeling purposes and to be maintained, at a minimum, in practice.

[57 FR 52987, Nov. 5, 1992, as amended at 61 FR 49682, Sept. 23, 1996]

§ 51.362 Motorist compliance enforcement program oversight.

The enforcement program shall be audited regularly and shall follow effective program management practices, including adjustments to improve operation when necessary.

(a) *Quality assurance and quality control.* A quality assurance program shall be implemented to insure effective overall performance of the enforcement system. Quality control procedures are required to instruct individuals in the enforcement process regarding how to properly conduct their activities. At a minimum, the quality control and quality assurance program shall include:

(1) Verification of exempt vehicle status by inspecting and confirming such vehicles by the program or its delegate;

(2) Facilitation of accurate critical test data and vehicle identifier collection through the use of automatic data capture systems such as bar-code scanners or optical character readers, or through redundant data entry (where applicable);

(3) Maintenance of an audit trail to allow for the assessment of enforcement effectiveness;

(4) Establishment of written procedures for personnel directly engaged in I/M enforcement activities;

(5) Establishment of written procedures for personnel engaged in I/M document handling and processing, such as registration clerks or personnel involved in sticker dispensing and waiver processing, as well as written procedures for the auditing of their performance;

(6) Follow-up validity checks on out-of-area or exemption-triggering registration changes;

(7) Analysis of registration-change applications to target potential violators;

(8) A determination of enforcement program effectiveness through periodic audits of test records and program compliance documentation;

(9) Enforcement procedures for disciplining, retraining, or removing enforcement personnel who deviate from established requirements, or in the case of non-government entities that process registrations, for defranchising, revoking or otherwise discontinuing the activity of the entity issuing registrations; and

(10) The prevention of fraudulent procurement or use of inspection documents by controlling and tracking document distribution and handling, and making stations financially liable for missing or unaccounted for documents by assessing monetary fines reflecting the ''street value'' of these documents (*i.e.*, the test fee plus the minimum waiver expenditure).

(b) *Information management.* In establishing an information base to be used in characterizing, evaluating, and enforcing the program, the State shall:

(1) Determine the subject vehicle population;

(2) Permit EPA audits of the enforcement process;

(3) Assure the accuracy of registration and other program document files;

(4) Maintain and ensure the accuracy of the testing database through periodic internal and/or third-party review;

(5) Compare the testing database to the registration database to determine program effectiveness, establish compliance rates, and to trigger potential enforcement action against non-complying motorists; and

(6) Sample the fleet as a determination of compliance through parking lot surveys, road-side pull-overs, or other in-use vehicle measurements.

(c) *SIP requirements.* The SIP shall include a description of enforcement program oversight and information management activities.

[57 FR 52987, Nov. 5, 1992, as amended at 65 FR 45534, July 24, 2000]

§ 51.363 Quality assurance.

An ongoing quality assurance program shall be implemented to discover, correct and prevent fraud, waste, and abuse and to determine whether procedures are being followed, are adequate, whether equipment is measuring accurately, and whether other problems

might exist which would impede program performance. The quality assurance and quality control procedures shall be periodically evaluated to assess their effectiveness and relevance in achieving program goals.

(a) *Performance audits.* Performance audits shall be conducted on a regular basis to determine whether inspectors are correctly performing all tests and other required functions. Performance audits shall be of two types: overt and covert, and shall include:

(1) Performance audits based upon written procedures and results shall be reported using either electronic or written forms to be retained in the inspector and station history files, with sufficient detail to support either an administrative or civil hearing;

(2) Performance audits in addition to regularly programmed audits for stations employing inspectors suspected of violating regulations as a result of audits, data analysis, or consumer complaints;

(3) Overt performance audits shall be performed at least twice per year for each lane or test bay and shall include:

(i) A check for the observance of appropriate document security;

(ii) A check to see that required record keeping practices are being followed;

(iii) A check for licenses or certificates and other required display information; and

(iv) Observation and written evaluation of each inspector's ability to properly perform an inspection;

(4) Covert performance audits shall include:

(i) Remote visual observation of inspector performance, which may include the use of aids such as binoculars or video cameras, at least once per year per inspector in high-volume stations (*i.e.*, those performing more than 4000 tests per year);

(ii) Site visits at least once per year per number of inspectors using covert vehicles set to fail (this requirement sets a minimum level of activity, not a requirement that each inspector be involved in a covert audit);

(iii) For stations that conduct both testing and repairs, at least one covert vehicle visit per station per year including the purchase of repairs and subsequent retesting if the vehicle is initially failed for tailpipe emissions (this activity may be accomplished in conjunction with paragraph (a)(4)(ii) of this section but must involve each station at least once per year);

(iv) Documentation of the audit, including vehicle condition and preparation, sufficient for building a legal case and establishing a performance record;

(v) Covert vehicles covering the range of vehicle technology groups (e.g., carbureted and fuel-injected vehicles) included in the program, including a full range of introduced malfunctions covering the emission test, the evaporative system tests, and emission control component checks (as applicable);

(vi) Sufficient numbers of covert vehicles and auditors to allow for frequent rotation of both to prevent detection by station personnel; and

(vii) Where applicable, access to online inspection databases by State personnel to permit the creation and maintenance of covert vehicle records.

(b) *Record audits.* Station and inspector records shall be reviewed or screened at least monthly to assess station performance and identify problems that may indicate potential fraud or incompetence. Such review shall include:

(1) Automated record analysis to identify statistical inconsistencies, unusual patterns, and other discrepancies;

(2) Visits to inspection stations to review records not already covered in the electronic analysis (if any); and

(3) Comprehensive accounting for all official forms that can be used to demonstrate compliance with the program.

(c) *Equipment audits.* During overt site visits, auditors shall conduct quality control evaluations of the required test equipment, including (where applicable):

(1) A gas audit using gases of known concentrations at least as accurate as those required for regular equipment quality control and comparing these concentrations to actual readings;

(2) A check for tampering, worn instrumentation, blocked filters, and other conditions that would impede accurate sampling;

(3) A check for critical flow in critical flow CVS units;

(4) A check of the Constant Volume Sampler flow calibration;

(5) A check for the optimization of the Flame Ionization Detection fuel-air ratio using methane;

(6) A leak check;

(7) A check to determine that station gas bottles used for calibration purposes are properly labelled and within the relevant tolerances;

(8) Functional dynamometer checks addressing coast-down, roll speed and roll distance, inertia weight selection, and power absorption;

(9) A check of the system's ability to accurately detect background pollutant concentrations;

(10) A check of the pressure monitoring devices used to perform the evaporative canister pressure test(s); and

(11) A check of the purge flow metering system.

(d) *Auditor training and proficiency*. (1) Auditors shall be formally trained and knowledgeable in:

(i) The use of test equipment and/or procedures;

(ii) Program rules and regulations;

(iii) The basics of air pollution control;

(iv) Basic principles of motor vehicle engine repair, related to emission performance;

(v) Emission control systems;

(vi) Evidence gathering;

(vii) State administrative procedures laws;

(viii) Quality assurance practices; and

(ix) Covert audit procedures.

(2) Auditors shall themselves be audited at least once annually.

(3) The training and knowledge requirements in paragraph (d)(1) of this section may be waived for temporary auditors engaged solely for the purpose of conducting covert vehicle runs.

(e) *SIP requirements*. The SIP shall include a description of the quality assurance program, and written procedures manuals covering both overt and covert performance audits, record audits, and equipment audits. This requirement does not include materials or discussion of details of enforcement strategies that would ultimately hamper the enforcement process.

[57 FR 52987, Nov. 5, 1992, as amended at 65 FR 45534, July 24, 2000]

§ 51.364 Enforcement against contractors, stations and inspectors.

Enforcement against licensed stations or contractors, and inspectors shall include swift, sure, effective, and consistent penalties for violation of program requirements.

(a) *Imposition of penalties*. A penalty schedule shall be developed that establishes minimum penalties for violations of program rules and procedures.

(1) The schedule shall categorize and list violations and the minimum penalties to be imposed for first, second, and subsequent violations and for multiple violation of different requirements. In the case of contracted systems, the State may use compensation retainage in lieu of penalties.

(2) Substantial penalties or retainage shall be imposed on the first offense for violations that directly affect emission reduction benefits. At a minimum, in test-and-repair programs inspector and station license suspension shall be imposed for at least 6 months whenever a vehicle is intentionally improperly passed for any required portion of the test. In test-only programs, inspectors shall be removed from inspector duty for at least 6 months (or a retainage penalty equivalent to the inspector's salary for that period shall be imposed).

(3) All findings of serious violations of rules or procedural requirements shall result in mandatory fines or retainage. In the case of gross neglect, a first offense shall result in a fine or retainage of no less than $100 or 5 times the inspection fee, whichever is greater, for the contractor or the licensed station, and the inspector if involved.

(4) Any finding of inspector incompetence shall result in mandatory training before inspection privileges are restored.

(5) License or certificate suspension or revocation shall mean the individual is barred from direct or indirect involvement in any inspection operation during the term of the suspension or revocation.

(b) *Legal authority*. (1) The quality assurance officer shall have the authority to temporarily suspend station and inspector licenses or certificates (after approval of a superior) immediately upon finding a violation or equipment failure that directly affects emission reduction benefits, pending a hearing when requested. In the case of immediate suspension, a hearing shall be held within fourteen calendar days of a written request by the station licensee or the inspector. Failure to hold a hearing within 14 days when requested shall cause the suspension to lapse. In the event that a State's constitution precludes such a temporary license suspension, the enforcement system shall be designed with adequate resources and mechanisms to hold a hearing to suspend or revoke the station or inspector license within three station business days of the finding.

(2) The oversight agency shall have the authority to impose penalties against the licensed station or contractor, as well as the inspector, even if the licensee or contractor had no direct knowledge of the violation but was found to be careless in oversight of inspectors or has a history of violations. Contractors and licensees shall be held fully responsible for inspector performance in the course of duty.

(c) *Recordkeeping*. The oversight agency shall maintain records of all warnings, civil fines, suspensions, revocations, and violations and shall compile statistics on violations and penalties on an annual basis.

(d) *SIP requirements*. (1) The SIP shall include the penalty schedule and the legal authority for establishing and imposing penalties, civil fines, license suspension, and revocations.

(2) In the case of State constitutional impediments to immediate suspension authority, the State Attorney General shall furnish an official opinion for the SIP explaining the constitutional impediment as well as relevant case law.

(3) The SIP shall describe the administrative and judicial procedures and responsibilities relevant to the enforcement process, including which agencies, courts, and jurisdictions are involved; who will prosecute and adjudicate cases; and other aspects of the enforcement of the program requirements, the resources to be allocated to this function, and the source of those funds. In States without immediate suspension authority, the SIP shall demonstrate that sufficient resources, personnel, and systems are in place to meet the three day case management requirement for violations that directly affect emission reductions.

(e) Alternative quality assurance procedures or frequencies that achieve equivalent or better results may be approved by the Administrator. Statistical process control shall be used whenever possible to demonstrate the efficacy of alternatives.

(f) Areas that qualify for and choose to implement an OTR low enhanced I/M program, as established in § 51.351(h), and that claim in their SIP less emission reduction credit than the basic performance standard for one or more pollutants, are not required to meet the oversight specifications of this section.

[57 FR 52987, Nov. 5, 1992, as amended at 61 FR 39037, July 25, 1996]

§ 51.365 Data collection.

Accurate data collection is essential to the management, evaluation, and enforcement of an I/M program. The program shall gather test data on individual vehicles, as well as quality control data on test equipment (with the exception of test procedures for which either no testing equipment is required or those test procedures relying upon a vehicle's OBD system).

(a) *Test data*. The goal of gathering test data is to unambiguously link specific test results to a specific vehicle, I/M program registrant, test site, and inspector, and to determine whether or not the correct testing parameters were observed for the specific vehicle in question. In turn, these data can be used to distinguish complying and noncomplying vehicles as a result of analyzing the data collected and comparing it to the registration database, to screen inspection stations and inspectors for investigation as to possible irregularities, and to help establish the overall effectiveness of the program. At a minimum, the program shall collect the following with respect to each test conducted:

(1) Test record number;

(2) Inspection station and inspector numbers;

(3) Test system number (where applicable);

(4) Date of the test;

(5) Emission test start time and the time final emission scores are determined;

(6) Vehicle Identification Number;

(7) License plate number;

(8) Test certificate number;

(9) Gross Vehicle Weight Rating (GVWR);

(10) Vehicle model year, make, and type;

(11) Number of cylinders or engine displacement;

(12) Transmission type;

(13) Odometer reading;

(14) Category of test performed (*i.e.*, initial test, first retest, or subsequent retest);

(15) Fuel type of the vehicle (*i.e.*, gas, diesel, or other fuel);

(16) Type of vehicle preconditioning performed (if any);

(17) Emission test sequence(s) used;

(18) Hydrocarbon emission scores and standards for each applicable test mode;

(19) Carbon monoxide emission scores and standards for each applicable test mode;

(20) Carbon dioxide emission scores ($CO+CO_2$) and standards for each applicable test mode;

(21) Nitrogen oxides emission scores and standards for each applicable test mode;

(22) Results (Pass/Fail/Not Applicable) of the applicable visual inspections for the catalytic converter, air system, gas cap, evaporative system, positive crankcase ventilation (PCV) valve, fuel inlet restrictor, and any other visual inspection for which emission reduction credit is claimed;

(23) Results of the evaporative system pressure test(s) expressed as a pass or fail;

(24) Results of the evaporative system purge test expressed as a pass or fail along with the total purge flow in liters achieved during the test (where applicable); and

(25) Results of the on-board diagnostic check expressed as a pass or fail along with the diagnostic trouble codes revealed (where applicable).

(b) *Quality control data.* At a minimum, the program shall gather and report the results of the quality control checks required under § 51.359 of this subpart, identifying each check by station number, system number, date, and start time. The data report shall also contain the concentration values of the calibration gases used to perform the gas characterization portion of the quality control checks (where applicable).

[57 FR 52987, Nov. 5, 1992, as amended at 61 FR 40945, Aug. 6, 1996; 65 FR 45534, July 24, 2000]

§ 51.366 Data analysis and reporting.

Data analysis and reporting are required to allow for monitoring and evaluation of the program by program management and EPA, and shall provide information regarding the types of program activities performed and their final outcomes, including summary statistics and effectiveness evaluations of the enforcement mechanism, the quality assurance system, the quality control program, and the testing element. Initial submission of the following annual reports shall commence within 18 months of initial implementation of the program as required by § 51.373 of this subpart. The biennial report shall commence within 30 months of initial implementation of the program as required by § 51.373 of this subpart.

(a) *Test data report.* The program shall submit to EPA by July of each year a report providing basic statistics on the testing program for January through December of the previous year, including:

(1) The number of vehicles tested by model year and vehicle type;

(2) By model year and vehicle type, the number and percentage of vehicles:

(i) Failing initially, per test type;

(ii) Failing the first retest per test type;

(iii) Passing the first retest per test type;

(iv) Initially failed vehicles passing the second or subsequent retest per test type;

(v) Initially failed vehicles receiving a waiver; and

(vi) Vehicles with no known final outcome (regardless of reason).

(vii)–(x) [Reserved]

(xi) Passing the on-board diagnostic check;

(xii) Failing the on-board diagnostic check;

(xiii) Failing the on-board diagnostic check and passing the tailpipe test (if applicable);

(xiv) Failing the on-board diagnostic check and failing the tailpipe test (if applicable);

(xv) Passing the on-board diagnostic check and failing the I/M gas cap evaporative system test (if applicable);

(xvi) Failing the on-board diagnostic check and passing the I/M gas cap evaporative system test (if applicable);

(xvii) Passing both the on-board diagnostic check and I/M gas cap evaporative system test (if applicable);

(xviii) Failing both the on-board diagnostic check and I/M gas cap evaporative system test (if applicable);

(xix) MIL is commanded on and no codes are stored;

(xx) MIL is not commanded on and codes are stored;

(xxi) MIL is commanded on and codes are stored;

(xxii) MIL is not commanded on and codes are not stored;

(xxiii) Readiness status indicates that the evaluation is not complete for any module supported by on-board diagnostic systems;

(3) The initial test volume by model year and test station;

(4) The initial test failure rate by model year and test station; and

(5) The average increase or decrease in tailpipe emission levels for HC, CO, and NO_X (if applicable) after repairs by model year and vehicle type for vehicles receiving a mass emissions test.

(b) *Quality assurance report.* The program shall submit to EPA by July of each year a report providing basic statistics on the quality assurance program for January through December of the previous year, including:

(1) The number of inspection stations and lanes:

(i) Operating throughout the year; and

(ii) Operating for only part of the year;

(2) The number of inspection stations and lanes operating throughout the year:

(i) Receiving overt performance audits in the year;

(ii) Not receiving overt performance audits in the year;

(iii) Receiving covert performance audits in the year;

(iv) Not receiving covert performance audits in the year; and

(v) That have been shut down as a result of overt performance audits;

(3) The number of covert audits:

(i) Conducted with the vehicle set to fail per test type;

(ii) Conducted with the vehicle set to fail any combination of two or more test types;

(iii) Resulting in a false pass per test type;

(iv) Resulting in a false pass for any combination of two or more test types;

(v)–(viii) [Reserved]

(4) The number of inspectors and stations:

(i) That were suspended, fired, or otherwise prohibited from testing as a result of covert audits;

(ii) That were suspended, fired, or otherwise prohibited from testing for other causes; and

(iii) That received fines;

(5) The number of inspectors licensed or certified to conduct testing;

(6) The number of hearings:

(i) Held to consider adverse actions against inspectors and stations; and

(ii) Resulting in adverse actions against inspectors and stations;

(7) The total amount collected in fines from inspectors and stations by type of violation;

(8) The total number of covert vehicles available for undercover audits over the year; and

(9) The number of covert auditors available for undercover audits.

(c) *Quality control report.* The program shall submit to EPA by July of each year a report providing basic statistics on the quality control program for January through December of the previous year, including:

(1) The number of emission testing sites and lanes in use in the program;

(2) The number of equipment audits by station and lane;

(3) The number and percentage of stations that have failed equipment audits; and

(4) Number and percentage of stations and lanes shut down as a result of equipment audits.

(d) *Enforcement report.* (1) All varieties of enforcement programs shall, at a minimum, submit to EPA by July of each year a report providing basic statistics on the enforcement program for January through December of the previous year, including:

(i) An estimate of the number of vehicles subject to the inspection program, including the results of an analysis of the registration data base;

(ii) The percentage of motorist compliance based upon a comparison of the number of valid final tests with the number of subject vehicles;

(iii) The total number of compliance documents issued to inspection stations;

(iv) The number of missing compliance documents;

(v) The number of time extensions and other exemptions granted to motorists; and

(vi) The number of compliance surveys conducted, number of vehicles surveyed in each, and the compliance rates found.

(2) Registration denial based enforcement programs shall provide the following additional information:

(i) A report of the program's efforts and actions to prevent motorists from falsely registering vehicles out of the program area or falsely changing fuel type or weight class on the vehicle registration, and the results of special studies to investigate the frequency of such activity; and

(ii) The number of registration file audits, number of registrations reviewed, and compliance rates found in such audits.

(3) Computer-matching based enforcement programs shall provide the following additional information:

(i) The number and percentage of subject vehicles that were tested by the initial deadline, and by other milestones in the cycle;

(ii) A report on the program's efforts to detect and enforce against motorists falsely changing vehicle classifications to circumvent program requirements, and the frequency of this type of activity; and

(iii) The number of enforcement system audits, and the error rate found during those audits.

(4) Sticker-based enforcement systems shall provide the following additional information:

(i) A report on the program's efforts to prevent, detect, and enforce against sticker theft and counterfeiting, and the frequency of this type of activity;

(ii) A report on the program's efforts to detect and enforce against motorists falsely changing vehicle classifications to circumvent program requirements, and the frequency of this type of activity; and

(iii) The number of parking lot sticker audits conducted, the number of vehicles surveyed in each, and the noncompliance rate found during those audits.

(e) *Additional reporting requirements.* In addition to the annual reports in paragraphs (a) through (d) of this section, programs shall submit to EPA by July of every other year, biennial reports addressing:

(1) Any changes made in program design, funding, personnel levels, procedures, regulations, and legal authority, with detailed discussion and evaluation of the impact on the program of all such changes; and

(2) Any weaknesses or problems identified in the program within the two-year reporting period, what steps have already been taken to correct those problems, the results of those steps, and any future efforts planned.

(f) *SIP requirements.* The SIP shall describe the types of data to be collected.

[57 FR 52987, Nov. 5, 1992, as amended at 61 FR 40945, Aug. 6, 1996; 65 FR 45534, July 24, 2000; 66 FR 18178, Apr. 5, 2001]

§ 51.367 Inspector training and licensing or certification.

All inspectors shall receive formal training and be licensed or certified to perform inspections.

(a) *Training.* (1) Inspector training shall impart knowledge of the following:

(i) The air pollution problem, its causes and effects;

(ii) The purpose, function, and goal of the inspection program;

(iii) Inspection regulations and procedures;

(iv) Technical details of the test procedures and the rationale for their design;

(v) Emission control device function, configuration, and inspection;

(vi) Test equipment operation, calibration, and maintenance (with the exception of test procedures which either do not require the use of special equipment or which rely upon a vehicle's OBD system);

(vii) Quality control procedures and their purpose;

(viii) Public relations; and

(ix) Safety and health issues related to the inspection process.

(2) If inspector training is not administered by the program, the responsible State agency shall monitor and evaluate the training program delivery.

(3) In order to complete the training requirement, a trainee shall pass (*i.e.*, a minimum of 80% of correct responses or lower if an occupational analysis justifies it) a written test covering all aspects of the training. In addition, a hands-on test shall be administered in which the trainee demonstrates without assistance the ability to conduct a proper inspection and to follow other required procedures. Inability to properly conduct all test procedures shall constitute failure of the test. The program shall take appropriate steps to insure the security and integrity of the testing process.

(b) *Licensing and certification.* (1) All inspectors shall be either licensed by the program (in the case of test-and-repair systems that do not use contracts with stations) or certified by an organization other than the employer (in test-only programs and test-and-repair programs that require station owners to enter into contracts with the State) in order to perform official inspections.

(2) Completion of inspector training and passing required tests shall be a condition of licensing or certification.

(3) Inspector licenses and certificates shall be valid for no more than 2 years, at which point refresher training and testing shall be required prior to renewal. Alternative approaches based on more comprehensive skill examination and determination of inspector competency may be used.

(4) Licenses or certificates shall not be considered a legal right but rather a privilege bestowed by the program conditional upon adherence to program requirements.

(c) *SIP requirements.* The SIP shall include a description of the training program, the written and hands-on tests, and the licensing or certification process.

[57 FR 52987, Nov. 5, 1992, as amended at 65 FR 45534, July 24, 2000]

§ 51.368 Public information and consumer protection.

(a) *Public awareness.* The SIP shall include a plan for informing the public on an ongoing basis throughout the life of the I/M program of the air quality problem, the requirements of Federal and State law, the role of motor vehicles in the air quality problem, the need for and benefits of an inspection program, how to maintain a vehicle in a low-emission condition, how to find a qualified repair technician, and the requirements of the I/M program. Motorists that fail the I/M test in enhanced I/M areas shall be offered a list of repair facilities in the area and information on the results of repairs performed by repair facilities in the area, as described in § 51.369(b)(1) of this subpart. Motorists that fail the I/M test shall also be provided with information concerning the possible cause(s) for failing the particular portions of the test that were failed.

(b) *Consumer protection.* The oversight agency shall institute procedures and mechanisms to protect the public from fraud and abuse by inspectors, mechanics, and others involved in the I/M program. This shall include a challenge mechanism by which a vehicle owner can contest the results of an inspection. It shall include mechanisms for protecting whistle blowers and following up on complaints by the public or others involved in the process. It shall include a program to assist owners in obtaining warranty covered repairs for eligible vehicles that fail a test. The SIP shall include a detailed consumer protection plan.

[57 FR 52987, Nov. 5, 1992, as amended at 65 FR 45534, July 24, 2000]

§ 51.369 Improving repair effectiveness.

Effective repairs are the key to achieving program goals and the State shall take steps to ensure the capability exists in the repair industry to repair vehicles that fail I/M tests.

(a) *Technical assistance.* The oversight agency shall provide the repair industry with information and assistance related to vehicle inspection diagnosis and repair.

(1) The agency shall regularly inform repair facilities of changes in the inspection program, training course schedules, common problems being found with particular engine families, diagnostic tips and the like.

(2) The agency shall provide a hot line service to assist repair technicians with specific repair problems, answer technical questions that arise in the repair process, and answer questions related to the legal requirements of State and Federal law with regard to emission control device tampering, engine switching, or similar issues.

(b) *Performance monitoring.* (1) In enhanced I/M program areas, the oversight agency shall monitor the performance of individual motor vehicle repair facilities, and provide to the public at the time of initial failure, a summary of the performance of local repair facilities that have repaired vehicles for retest. Performance monitoring shall include statistics on the number of vehicles submitted for a retest after repair by the repair facility, the percentage passing on first retest, the percentage requiring more than one repair/retest trip before passing, and the percentage receiving a waiver. Programs may provide motorists with alternative statistics that convey similar information on the relative ability of repair facilities in providing effective and convenient repair, in light of the age and other characteristics of vehicles presented for repair at each facility.

(2) Programs shall provide feedback, including statistical and qualitative information to individual repair facilities on a regular basis (at least annually) regarding their success in repairing failed vehicles.

(3) A prerequisite for a retest shall be a completed repair form that indicates which repairs were performed, as well as any technician recommended repairs that were not performed, and identification of the facility that performed the repairs.

(c) *Repair technician training.* The State shall assess the availability of adequate repair technician training in the I/M area and, if the types of training described in paragraphs (c)(1) through (4) of this section are not currently available, shall insure that training is made available to all interested individuals in the community either through private or public facilities. This may involve working with local community colleges or vocational schools to add curricula to existing programs or start new programs or it might involve attracting private training providers to offer classes in the area. The training available shall include:

(1) Diagnosis and repair of malfunctions in computer controlled, close-loop vehicles;

(2) The application of emission control theory and diagnostic data to the diagnosis and repair of failures on the transient emission test and the evaporative system functional checks (where applicable);

(3) Utilization of diagnostic information on systematic or repeated failures observed in the transient emission test and the evaporative system functional checks (where applicable); and

(4) General training on the various subsystems related to engine emission control.

(d) *SIP requirements.* The SIP shall include a description of the technical assistance program to be implemented, a description of the procedures and criteria to be used in meeting the performance monitoring requirements of this section, and a description of the repair technician training resources available in the community.

[57 FR 52987, Nov. 5, 1992, as amended at 65 FR 45535, July 24, 2000]

§ 51.370 Compliance with recall notices.

States shall establish methods to ensure that vehicles subject to enhanced I/M and that are included in either a

''Voluntary Emissions Recall'' as defined at 40 CFR 85.1902(d), or in a remedial plan determination made pursuant to section 207(c) of the Act, receive the required repairs. States shall require that owners of recalled vehicles have the necessary recall repairs completed, either in order to complete an annual or biennial inspection process or to obtain vehicle registration renewal. All recalls for which owner notification occurs after January 1, 1995 shall be included in the enhanced I/M recall requirement.

(a) *General requirements.* (1) The State shall have an electronic means to identify recalled vehicles based on lists of VINs with unresolved recalls made available by EPA, the vehicle manufacturers, or a third party supplier approved by the Administrator. The State shall update its list of unresolved recalls on a quarterly basis at a minimum.

(2) The State shall require owners or lessees of vehicles with unresolved recalls to show proof of compliance with recall notices in order to complete either the inspection or registration cycle.

(3) Compliance shall be required on the next registration or inspection date, allowing a reasonable period to comply, after notification of recall was received by the State.

(b) *Enforcement.* (1) A vehicle shall either fail inspection or be denied vehicle registration if the required recall repairs have not been completed.

(2) In the case of vehicles obtaining recall repairs but remaining on the updated list provided in paragraph (a)(1) of this section, the State shall have a means of verifying completion of the required repairs; electronic records or paper receipts provided by the authorized repair facility shall be required. The vehicle inspection or registration record shall be modified to include (or be supplemented with other VIN-linked records which include) the recall campaign number(s) and the date(s) repairs were performed. Documentation verifying required repairs shall include the following:

(i) The VIN, make, and model year of the vehicle; and

(ii) The recall campaign number and the date repairs were completed.

(c) *Reporting requirements.* The State shall submit to EPA, by July of each year for the previous calendar year, an annual report providing the following information:

(1) The number of vehicles in the I/M area initially listed as having unresolved recalls, segregated by recall campaign number;

(2) The number of recalled vehicles brought into compliance by owners;

(3) The number of listed vehicles with unresolved recalls that, as of the end of the calendar year, were not yet due for inspection or registration;

(4) The number of recalled vehicles still in non-compliance that have either failed inspection or been denied registration on the basis of non-compliance with recall; and

(5) The number of recalled vehicles that are otherwise not in compliance.

(d) *SIP submittals.* The SIP shall describe the procedures used to incorporate the vehicle lists provided in paragraph (a)(1) of this section into the inspection or registration database, the quality control methods used to insure that recall repairs are properly documented and tracked, and the method (inspection failure or registration denial) used to enforce the recall requirements.

§ 51.371 On-road testing.

On-road testing is defined as testing of vehicles for conditions impacting the emission of HC, CO, NO_X and/or CO2 emissions on any road or roadside in the nonattainment area or the I/M program area. On-road testing is required in enhanced I/M areas and is an option for basic I/M areas.

(a) *General requirements.* (1) On-road testing is to be part of the emission testing system, but is to be a complement to testing otherwise required.

(2) On-road testing is not required in every season or on every vehicle but shall evaluate the emission performance of 0.5% of the subject fleet statewide or 20,000 vehicles, whichever is less, per inspection cycle.

(3) The on-road testing program shall provide information about the performance of in-use vehicles, by measuring on-road emissions through the use of remote sensing devices or by assessing vehicle emission performance through

roadside pullovers including tailpipe or evaporative emission testing or a check of the onboard diagnostic (OBD) system for vehicles so equipped. The program shall collect, analyze and report on-road testing data.

(4) Owners of vehicles that have previously been through the normal periodic inspection and passed the final retest and found to be high emitters shall be notified that the vehicles are required to pass an out-of-cycle follow-up inspection; notification may be by mailing in the case of remote sensing on-road testing or through immediate notification if roadside pullovers are used.

(b) *SIP requirements.* (1) The SIP shall include a detailed description of the on-road testing program, including the types of testing, test limits and criteria, the number of vehicles (the percentage of the fleet) to be tested, the number of employees to be dedicated to the on-road testing effort, the methods for collecting, analyzing, utilizing, and reporting the results of on-road testing and, the portion of the program budget to be dedicated to on-road testing.

(2) The SIP shall include the legal authority necessary to implement the on-road testing program, including the authority to enforce off-cycle inspection and repair requirements (where applicable).

(3) Emission reduction credit for on-road testing programs shall be granted for a program designed to obtain measurable emission reductions over and above those already predicted to be achieved by other aspects of the I/M program. Emission reduction credit will only be granted to those programs which require out-of-cycle repairs for confirmed high-emitting vehicles identified under the on-road testing program. The SIP shall include technical support for the claimed additional emission reductions.

[57 FR 52987, Nov. 5, 1992, as amended at 65 FR 45535, July 24, 2000]

§ 51.372 State Implementation Plan submissions.

(a) *SIP submittals.* The SIP shall address each of the elements covered in this subpart, including, but not limited to:

(1) A schedule of implementation of the program including interim milestones leading to mandatory testing. The milestones shall include, at a minimum:

(i) Passage of enabling statutory or other legal authority;

(ii) Proposal of draft regulations and promulgation of final regulations;

(iii) Issuance of final specifications and procedures;

(iv) Issuance of final Request for Proposals (if applicable);

(v) Licensing or certifications of stations and inspectors;

(vi) The date mandatory testing will begin for each model year to be covered by the program;

(vii) The date full-stringency cutpoints will take effect;

(viii) All other relevant dates;

(2) An analysis of emission level targets for the program using the most current EPA mobile source emission model or an alternative approved by the Administrator showing that the program meets the performance standard described in § 51.351 or § 51.352 of this subpart, as applicable;

(3) A description of the geographic coverage of the program, including ZIP codes if the program is not countywide;

(4) A detailed discussion of each of the required design elements, including provisions for Federal facility compliance;

(5) Legal authority requiring or allowing implementation of the I/M program and providing either broad or specific authority to perform all required elements of the program;

(6) Legal authority for I/M program operation until such time as it is no longer necessary (*i.e.*, until a Section 175 maintenance plan without an I/M program is approved by EPA);

(7) Implementing regulations, interagency agreements, and memoranda of understanding; and

(8) Evidence of adequate funding and resources to implement all aspects of the program.

(b) *Submittal schedule.* The SIP shall be submitted to EPA according to the following schedule—

(1) [Reserved]

(2) A SIP revision required as a result of designation for a National Ambient

Air Quality Standard in place prior to implementation of the 8-hour ozone standard and including all necessary legal authority and the items specified in paragraphs (a)(1) through (a)(8) of this section, shall be submitted no later than November 15, 1993. For nonattainment areas designated and classified under the 8-hour ozone standard, a SIP revision including all necessary legal authority and the items specified in paragraphs (a)(1) through (a)(8) of this section, shall be submitted by May 8, 2007 or 1 year after the effective date of designation and classification under the 8-hour ozone National Ambient Air Quality Standard, whichever is later.

(3) [Reserved]

(c) *Redesignation requests.* Any nonattainment area that EPA determines would otherwise qualify for redesignation from nonattainment to attainment shall receive full approval of a State Implementation Plan (SIP) submittal under Sections 182(a)(2)(B) or 182(b)(4) if the submittal contains the following elements:

(1) Legal authority to implement a basic I/M program (or enhanced if the State chooses to opt up) as required by this subpart. The legislative authority for an I/M program shall allow the adoption of implementing regulations without requiring further legislation.

(2) A request to place the I/M plan (if no I/M program is currently in place or if an I/M program has been terminated,) or the I/M upgrade (if the existing I/M program is to continue without being upgraded) into the contingency measures portion of the maintenance plan upon redesignation.

(3) A contingency measure consisting of a commitment by the Governor or the Governor's designee to adopt or consider adopting regulations to implement an I/M program to correct a violation of the ozone or CO standard or other air quality problem, in accordance with the provisions of the maintenance plan.

(4) A contingency commitment that includes an enforceable schedule for adoption and implementation of the I/M program, and appropriate milestones. The schedule shall include the date for submission of a SIP meeting all of the requirements of this subpart. Schedule milestones shall be listed in months from the date EPA notifies the State that it is in violation of the ozone or CO standard or any earlier date specified in the State plan. Unless the State, in accordance with the provisions of the maintenance plan, chooses not to implement I/M, it must submit a SIP revision containing an I/M program no more than 18 months after notification by EPA.

(d) Basic areas continuing operation of I/M programs as part of their maintenance plan without implemented upgrades shall be assumed to be 80% as effective as an implemented, upgraded version of the same I/M program design, unless a State can demonstrate using operating information that the I/M program is more effective than the 80% level.

(e) *SIP submittals to correct violations.* SIP submissions required pursuant to a violation of the ambient ozone or CO standard (as discussed in paragraph (c) of this section) shall address all of the requirements of this subpart. The SIP shall demonstrate that performance standards in either § 51.351 or § 51.352 shall be met using an evaluation date (rounded to the nearest January for carbon monoxide and July for hydrocarbons) seven years after the date EPA notifies the State that it is in violation of the ozone or CO standard or any earlier date specified in the State plan. Emission standards for vehicles subject to an IM240 test may be phased in during the program but full standards must be in effect for at least one complete test cycle before the end of the 5-year period. All other requirements shall take effect within 24 months of the date EPA notifies the State that it is in violation of the ozone or CO standard or any earlier date specified in the State plan. The phase-in allowances of § 51.373(c) of this subpart shall not apply.

[57 FR 52987, Nov. 5, 1992, as amended at 60 FR 1738, Jan. 5, 1995; 60 FR 48036, Sept. 18, 1995; 61 FR 40946, Aug. 6, 1996; 61 FR 44119, Aug. 27, 1996; 71 FR 17711, Apr. 7, 2006]

§ 51.373 Implementation deadlines.

I/M programs shall be implemented as expeditiously as practicable.

(a) Decentralized basic programs shall be fully implemented by January 1, 1994, and centralized basic programs

shall be fully implemented by July 1, 1994. More implementation time may be approved by the Administrator if an enhanced I/M program is implemented.

(b) For areas newly required to implement basic I/M as a result of designation under the 8-hour ozone standard, the required program shall be fully implemented no later than 4 years after the effective date of designation and classification under the 8-hour ozone standard.

(c) All requirements related to enhanced I/M programs shall be implemented by January 1, 1995, with the following exceptions.

(1) Areas switching from an existing test-and-repair network to a test-only network may phase in the change between January of 1995 and January of 1996. Starting in January of 1995 at least 30% of the subject vehicles shall participate in the test-only system (in States with multiple I/M areas, implementation is not required in every area by January 1995 as long as statewide, 30% of the subject vehicles are involved in testing) and shall be subject to the new test procedures (including the evaporative system checks, visual inspections, and tailpipe emission tests). By January 1, 1996, all applicable vehicle model years and types shall be included in the test-only system. During the phase-in period, all requirements of this subpart shall be applied to the test-only portion of the program; existing requirements may continue to apply for the test-and-repair portion of the program until it is phased out by January 1, 1996.

(2) Areas starting new test-only programs and those with existing test-only programs may also phase in the new test procedures between January 1, 1995 and January 1, 1996. Other program requirements shall be fully implemented by January 1, 1995.

(d) For areas newly required to implement enhanced I/M as a result of designation under the 8-hour ozone standard, the required program shall be fully implemented no later than 4 years after the effective date of designation and classification under the 8-hour ozone standard.

(e) [Reserved]

(f) Areas that choose to implement an enhanced I/M program only meeting the requirements of § 51.351(h) shall fully implement the program no later than July 1, 1999. The availability and use of this late start date does not relieve the area of the obligation to meet the requirements of § 51.351(h)(11) by the end of 1999.

(g) On-Board Diagnostic checks shall be implemented in all basic, low enhanced and high enhanced areas as part of the I/M program by January 1, 2002. Alternatively, states may elect to phase-in OBD-I/M testing for one test cycle by using the OBD-I/M check to screen clean vehicles from tailpipe testing and require repair and retest for only those vehicles which proceed to fail the tailpipe test. An additional alternative is also available to states with regard to the deadline for mandatory testing, repair, and retesting of vehicles based upon the OBD-I/M check. Under this third option, if a state can show good cause (and the Administrator takes notice-and-comment action to approve this good cause showing), up to an additional 12 months' extension may be granted, establishing an alternative start date for such states of no later than January 1, 2003. States choosing to make this showing will also have available to them the phase-in approach described in this section, with the one-cycle time limit to begin coincident with the alternative start date established by Administrator approval of the showing, but no later than January 1, 2003. The showing of good cause (and its approval or disapproval) will be addressed on a case-by-case basis.

(h) For areas newly required to implement either a basic or enhanced I/M program as a result of being designated and classified under the 8-hour ozone standard, such programs shall begin OBD testing on subject OBD-equipped vehicles coincident with program start-up.

[57 FR 52987, Nov. 5, 1992, as amended at 58 FR 59367, Nov. 9, 1993; 61 FR 39037, July 25, 1996; 61 FR 40946, Aug. 6, 1996; 63 FR 24433, May 4, 1998; 66 FR 18178, Apr. 5, 2001; 71 FR 17711, Apr. 7, 2006]

APPENDIX A TO SUBPART S OF PART 51—CALIBRATIONS, ADJUSTMENTS AND QUALITY CONTROL

(I) Steady-State Test Equipment

States may opt to use transient emission test equipment for steady-state tests and follow the quality control requirements in paragraph (II) of this appendix instead of the following requirements.

(a) Equipment shall be calibrated in accordance with the manufacturers' instructions.

(b) *Prior to each test*—(1) *Hydrocarbon hang-up check*. Immediately prior to each test the analyzer shall automatically perform a hydrocarbon hang-up check. If the HC reading, when the probe is sampling ambient air, exceeds 20 ppm, the system shall be purged with clean air or zero gas. The analyzer shall be inhibited from continuing the test until HC levels drop below 20 ppm.

(2) *Automatic zero and span*. The analyzer shall conduct an automatic zero and span check prior to each test. The span check shall include the HC, CO, and CO2 channels, and the NO and O_2 channels, if present. If zero and/or span drift cause the signal levels to move beyond the adjustment range of the analyzer, it shall lock out from testing.

(3) *Low flow*. The system shall lock out from testing if sample flow is below the acceptable level as defined in paragraph (I)(b)(6) of appendix D to this subpart.

(c) *Leak check*. A system leak check shall be performed within twenty-four hours before the test in low volume stations (those performing less than the 4,000 inspections per year) and within four hours in high-volume stations (4,000 or more inspections per year) and may be performed in conjunction with the gas calibration described in paragraph (I)(d)(1) of this appendix. If a leak check is not performed within the preceding twenty-four hours in low volume stations and within four hours in high-volume stations or if the analyzer fails the leak check, the analyzer shall lock out from testing. The leak check shall be a procedure demonstrated to effectively check the sample hose and probe for leaks and shall be performed in accordance with good engineering practices. An error of more than ±2% of the reading using low range span gas shall cause the analyzer to lock out from testing and shall require repair of leaks.

(d) *Gas calibration*. (1) On each operating day in high-volume stations, analyzers shall automatically require and successfully pass a two-point gas calibration for HC, CO, and CO2 and shall continually compensate for changes in barometric pressure. Calibration shall be checked within four hours before the test and the analyzer adjusted if the reading is more than 2% different from the span gas value. In low-volume stations, analyzers shall undergo a two-point calibration within seventy-two hours before each test, unless changes in barometric pressure are compensated for automatically and statistical process control demonstrates equal or better quality control using different frequencies. Gas calibration shall be accomplished by introducing span gas that meets the requirements of paragraph (I)(d)(3) of this appendix into the analyzer through the calibration port. If the analyzer reads the span gas within the allowable tolerance range (*i.e.*, the square root of sum of the squares of the span gas tolerance described in paragraph (I)(d)(3) of this appendix and the calibration tolerance, which shall be equal to 2%), no adjustment of the analyzer is necessary. The gas calibration procedure shall correct readings that exceed the allowable tolerance range to the center of the allowable tolerance range. The pressure in the sample cell shall be the same with the calibration gas flowing during calibration as with the sample gas flowing during sampling. If the system is not calibrated, or the system fails the calibration check, the analyzer shall lock out from testing.

(2) *Span points*. A two point gas calibration procedure shall be followed. The span shall be accomplished at one of the following pairs of span points:

(A) 300—ppm propane (HC)
1.0—% carbon monoxide (CO)
6.0—% carbon dioxide (CO2)
1000—ppm nitric oxide (if equipped with NO)
1200—ppm propane (HC)
4.0—% carbon monoxide (CO)
12.0—% carbon dioxide (CO2)
3000—ppm nitric oxide (if equipped with NO)
(B) —ppm propane
0.0—% carbon monoxide
0.0—% carbon dioxide
0—ppm nitric oxide (if equipped with NO)
600—ppm propane (HC)
1.6—% carbon monoxide (CO)
11.0—% carbon dioxide (CO2)
1200—ppm nitric oxide (if equipped with NO)

(3) *Span gases*. The span gases used for the gas calibration shall be traceable to National Institute of Standards and Technology (NIST) standards ±2%, and shall be within two percent of the span points specified in paragraph (d)(2) of this appendix. Zero gases shall conform to the specifications given in § 86.114–79(a)(5) of this chapter.

(e) *Dynamometer checks*—(1) *Monthly check*. Within one month preceding each loaded test, the accuracy of the roll speed indicator shall be verified and the dynamometer shall be checked for proper power absorber settings.

(2) *Semi-annual check*. Within six months preceding each loaded test, the road-load response of the variable-curve dynamometer or the frictional power absorption of the dynamometer shall be checked by a coast down

procedure similar to that described in §86.118–78 of this chapter. The check shall be done at 30 mph, and a power absorption load setting to generate a total horsepower (hp) of 4.1 hp. The actual coast down time from 45 mph to 15 mph shall be within ±1 second of the time calculated by the following equation:

$$\text{Coast Down Time} = \frac{0.0508 \times W}{HP}$$

where W is the total inertia weight as represented by the weight of the rollers (excluding free rollers), and any inertia flywheels used, measured in pounds. If the coast down time is not within the specified tolerance the dynamometer shall be taken out of service and corrective action shall be taken.

(f) *Other checks*. In addition to the above periodic checks, these shall also be used to verify system performance under the following special circumstances.

(1) *Gas Calibration*. (A) Each time the analyzer electronic or optical systems are repaired or replaced, a gas calibration shall be performed prior to returning the unit to service.

(B) In high-volume stations, monthly multi-point calibrations shall be performed. Low-volume stations shall perform multi-point calibrations every six months. The calibration curve shall be checked at 20%, 40%, 60%, and 80% of full scale and adjusted or repaired if the specifications in appendix D(I)(b)(1) to this subpart are not met.

(2) *Leak checks*. Each time the sample line integrity is broken, a leak check shall be performed prior to testing.

(II) Transient Test Equipment

(a) *Dynamometer*. Once per week, the calibration of each dynamometer and each fly wheel shall be checked by a dynamometer coast-down procedure comparable to that in §86.118–78 of this chapter between the speeds of 55 to 45 mph, and between 30 to 20 mph. All rotating dynamometer components shall be included in the coast-down check for the inertia weight selected. For dynamometers with uncoupled rolls, the uncoupled rollers may undergo a separate coast-down check. If a vehicle is used to motor the dynamometer to the beginning coast-down speed, the vehicle shall be lifted off the dynamometer rolls before the coast-down test begins. If the difference between the measured coast-down time and the theoretical coast-down time is greater than +1 second, the system shall lock out, until corrective action brings the dynamometer into calibration.

(b) *Constant volume sampler*. (1) The constant volume sampler (CVS) flow calibration shall be checked daily by a procedure that identifies deviations in flow from the true value. Deviations greater than ±4% shall be corrected.

(2) The sample probe shall be cleaned and checked at least once per month. The main CVS venturi shall be cleaned and checked at least once per year.

(3) Verification that flow through the sample probe is adequate for the design shall be done daily. Deviations greater than the design tolerances shall be corrected.

(c) *Analyzer system*—(1) *Calibration checks*. (A) Upon initial operation, calibration curves shall be generated for each analyzer. The calibration curve shall consider the entire range of the analyzer as one curve. At least 6 calibration points plus zero shall be used in the lower portion of the range corresponding to an average concentration of approximately 2 gpm for HC, 30 gpm for CO, 3 gpm for NO_X, and 400 gpm for CO_2. For the case where a low and a high range analyzer is used, the high range analyzer shall use at least 6 calibration points plus zero in the lower portion of the high range scale corresponding to approximately 100% of the full-scale value of the low range analyzer. For all analyzers, at least 6 calibration points shall also be used to define the calibration curve in the region above the 6 lower calibration points. Gas dividers may be used to obtain the intermediate points for the general range classifications specified. The calibration curves generated shall be a polynomial of no greater order than 4th order, and shall fit the date within 0.5% at each calibration point.

(B) For all calibration curves, curve checks, span adjustments, and span checks, the zero gas shall be considered a down-scale reference gas, and the analyzer zero shall be set at the trace concentration value of the specific zero gas used.

(2) The basic curve shall be checked monthly by the same procedure used to generate the curve, and to the same tolerances.

(3) On a daily basis prior to vehicle testing—

(A) The curve for each analyzer shall be checked by adjusting the analyzer to correctly read a zero gas and an up-scale span gas, and then by correctly reading a mid-scale span gas within 2% of point. If the analyzer does not read the mid-scale span point within 2% of point, the system shall lock out. The up-scale span gas concentration for each analyzer shall correspond to approximately 80 percent of full scale, and the mid-point concentration shall correspond to approximately 15 percent of full scale; and

(B) After the up-scale span check, each analyzer in a given facility shall analyze a sample of a random concentration corresponding to approximately 0.5 to 3 times the cut point (in gpm) for the constituent. The value of the random sample may be determined by a gas blender. The deviation in analysis from the sample concentration for

each analyzer shall be recorded and compared to the historical mean and standard deviation for the analyzers at the facility and at all facilities. Any reading exceeding 3 sigma shall cause the analyzer to lock out.

(4) *Flame ionization detector check*. Upon initial operation, and after maintenance to the detector, each Flame Ionization Detector (FID) shall be checked, and adjusted if necessary, for proper peaking and characterization. Procedures described in SAE Paper No. 770141 are recommended for this purpose. A copy of this paper may be obtained from the Society of Automotive Engineers, Inc. (SAE), 400 Commonwealth Drive, Warrendale, Pennsylvania, 15096–0001. Additionally, every month the response of each FID to a methane concentration of approximately 50 ppm CH_4 shall be checked. If the response is outside of the range of 1.10 to 1.20, corrective action shall be taken to bring the FID response within this range. The response shall be computed by the following formula:

$$\text{Ratio of Methane Response} = \frac{\text{FID response in ppmC}}{\text{ppm methane in cylinder}}$$

(5) *Spanning frequency*. The zero and up-scale span point shall be checked, and adjusted if necessary, at 2 hour intervals following the daily mid-scale curve check. If the zero or the up-scale span point drifts by more than 2% for the previous check (except for the first check of the day), the system shall lock out, and corrective action shall be taken to bring the system into compliance.

(6) *Spanning limit checks*. The tolerance on the adjustment of the up-scale span point is 0.4% of point. A software algorithm to perform the span adjustment and subsequent calibration curve adjustment shall be used. However, software up-scale span adjustments greater than ±10% shall cause the system to lock out, requiring system maintenance.

(7) *Integrator checks*. Upon initial operation, and every three months thereafter, emissions from a randomly selected vehicle with official test value greater than 60% of the standard (determined retrospectively) shall be simultaneously sampled by the normal integration method and by the bag method in each lane. The data from each method shall be put into a historical data base for determining normal and deviant performance for each test lane, facility, and all facilities combined. Specific deviations exceeding ±5% shall require corrective action.

(8) *Interference*. CO and CO_2 analyzers shall be checked prior to initial service, and on a yearly basis thereafter, for water interference. The specifications and procedures used shall generally comply with either §86.122–78 or §86.321–79 of this chapter.

(9) *NO_X converter check*. The converter efficiency of the NO_2 to NO converter shall be checked on a weekly basis. The check shall generally conform to §86.123–78 of this chapter, or EPA MVEL Form 305–01. Equivalent methods may be approved by the Administrator.

(10) *NO/NO_X flow balance*. The flow balance between the NO and NO_X test modes shall be checked weekly. The check may be combined with the NO_X convertor check as illustrated in EPA MVEL Form 305–01.

(11) *Additional checks*. Additional checks shall be performed on the HC, CO, CO_2, and NO_X analyzers according to best engineering practices for the measurement technology used to ensure that measurements meet specified accuracy requirements.

(12) *System artifacts (hang-up)*. Prior to each test a comparison shall be made between the background HC reading, the HC reading measured through the sample probe (if different), and the zero gas. Deviations from the zero gas greater than 10 parts per million carbon (ppmC) shall cause the analyzer to lock out.

(13) *Ambient background*. The average of the pre-test and post-test ambient background levels shall be compared to the permissible levels of 10 ppmC HC, 20 ppm CO, and 1 ppm NO_X. If the permissible levels are exceeded, the test shall be voided and corrective action taken to lower the ambient background concentrations.

(14) *Analytical gases*. Zero gases shall meet the requirements of §86.114–79(a)(5) of this chapter. NO_X calibration gas shall be a single blend using nitrogen as the diluent. Calibration gas for the flame ionization detector shall be a single blend of propane with a diluent of air. Calibration gases for CO and CO_2 shall be single blends using nitrogen or air as a diluent. Multiple blends of HC, CO, and CO_2 in air may be used if shown to be stable and accurate.

(III) Purge Analysis System

On a daily basis each purge flow meter shall be checked with a simulated purge flow against a reference flow measuring device with performance specifications equal to or better than those specified for the purge meter. The check shall include a mid-scale rate check, and a total flow check between 10 and 20 liters. Deviations greater than ±5% shall be corrected. On a monthly basis, the

calibration of purge meters shall be checked for proper rate and total flow with three equally spaced points across the flow rate and the totalized flow range. Deviations exceeding the specified accuracy shall be corrected. The dynamometer quality assurance checks required under paragraph (II) of this appendix shall also apply to the dynamometer used for purge tests.

(IV) Evaporative System Integrity Test Equipment

(a) On a weekly basis pressure measurement devices shall be checked against a reference device with performance specifications equal to or better than those specified for the measurement device. Deviations exceeding the performance specifications shall be corrected. Flow measurement devices, if any, shall be checked according to paragraph III of this appendix.

(b) Systems that monitor evaporative system leaks shall be checked for integrity on a daily basis by sealing and pressurizing.

[57 FR 52987, Nov. 5, 1992, as amended at 58 FR 59367, Nov. 9, 1993]

APPENDIX B TO SUBPART S OF PART 51—TEST PROCEDURES

(I) Idle test

(a) *General requirements*—(1) *Exhaust gas sampling algorithm.* The analysis of exhaust gas concentrations shall begin 10 seconds after the applicable test mode begins. Exhaust gas concentrations shall be analyzed at a minimum rate of two times per second. The measured value for pass/fail determinations shall be a simple running average of the measurements taken over five seconds.

(2) *Pass/fail determination.* A pass or fail determination shall be made for each applicable test mode based on a comparison of the short test standards contained in appendix C to this subpart, and the measured value for HC and CO as described in paragraph (I)(a)(1) of this appendix. A vehicle shall pass the test mode if any pair of simultaneous measured values for HC and CO are below or equal to the applicable short test standards. A vehicle shall fail the test mode if the values for either HC or CO, or both, in all simultaneous pairs of values are above the applicable standards.

(3) *Void test conditions.* The test shall immediately end and any exhaust gas measurements shall be voided if the measured concentration of CO plus CO_2 falls below six percent or the vehicle's engine stalls at any time during the test sequence.

(4) *Multiple exhaust pipes.* Exhaust gas concentrations from vehicle engines equipped with multiple exhaust pipes shall be sampled simultaneously.

(5) This test shall be immediately terminated upon reaching the overall maximum test time.

(b) *Test sequence.* (1) The test sequence shall consist of a first-chance test and a second-chance test as follows:

(i) The first-chance test, as described under paragraph (c) of this section, shall consist of an idle mode.

(ii) The second-chance test as described under paragraph (I)(d) of this appendix shall be performed only if the vehicle fails the first-chance test.

(2) The test sequence shall begin only after the following requirements are met:

(i) The vehicle shall be tested in as-received condition with the transmission in neutral or park and all accessories turned off. The engine shall be at normal operating temperature (as indicated by a temperature gauge, temperature lamp, touch test on the radiator hose, or other visual observation for overheating).

(ii) For all pre-1996 model year vehicles, a tachometer shall be attached to the vehicle in accordance with the analyzer manufacturer's instructions. For 1996 and newer model year vehicles the OBD data link connector will be used to monitor RPM. In the event that an OBD data link connector is not available or that an RPM signal is not available over the data link connector, a tachometer shall be used instead.

(iii) The sample probe shall be inserted into the vehicle's tailpipe to a minimum depth of 10 inches. If the vehicle's exhaust system prevents insertion to this depth, a tailpipe extension shall be used.

(iv) The measured concentration of CO plus CO_2 shall be greater than or equal to six percent.

(c) *First-chance test.* The test timer shall start (tt=0) when the conditions specified in paragraph (I)(b)(2) of this appendix are met. The first-chance test shall have an overall maximum test time of 145 seconds (tt=145). The first-chance test shall consist of an idle mode only.

(1) The mode timer shall start (mt=0) when the vehicle engine speed is between 350 and 1100 rpm. If engine speed exceeds 1100 rpm or falls below 350 rpm, the mode timer shall reset zero and resume timing. The minimum mode length shall be determined as described under paragraph (I)(c)(2) of this appendix. The maximum mode length shall be 90 seconds elapsed time (mt=90).

(2) The pass/fail analysis shall begin after an elapsed time of 10 seconds (mt=10). A pass or fail determination shall be made for the vehicle and the mode shall be terminated as follows:

(i) The vehicle shall pass the idle mode and the test shall be immediately terminated if, prior to an elapsed time of 30 seconds (mt=30), measured values are less than or equal to 100 ppm HC and 0.5 percent CO.

(ii) The vehicle shall pass the idle mode and the test shall be terminated at the end of an elapsed time of 30 seconds (mt=30), if prior to that time the criteria of paragraph (I)(c)(2)(i) of this appendix are not satisfied and the measured values are less than or equal to the applicable short test standards as described in paragraph (I)(a)(2) of this appendix.

(iii) The vehicle shall pass the idle mode and the test shall be immediately terminated if, at any point between an elapsed time of 30 seconds (mt=30) and 90 seconds (mt=90), the measured values are less than or equal to the applicable short test standards as described in paragraph (I)(a)(2) of this appendix.

(iv) The vehicle shall fail the idle mode and the test shall be terminated if none of the provisions of paragraphs (I)(c)(2)(i), (ii) and (iii) of this appendix is satisfied by an elapsed time of 90 seconds (mt=90). Alternatively, the vehicle may be failed if the provisions of paragraphs (I)(c)(2)(i) and (ii) of this appendix are not met within an elapsed time of 30 seconds.

(v) *Optional*. The vehicle may fail the first-chance test and the second-chance test shall be omitted if no exhaust gas concentration lower than 1800 ppm HC is found by an elapsed time of 30 seconds (mt=30).

(d) *Second-chance test*. If the vehicle fails the first-chance test, the test timer shall reset to zero (tt=0) and a second-chance test shall be performed. The second-chance test shall have an overall maximum test time of 425 seconds (tt=425). The test shall consist of a preconditioning mode followed immediately by an idle mode.

(1) *Preconditioning mode*. The mode timer shall start (mt=0) when the engine speed is between 2200 and 2800 rpm. The mode shall continue for an elapsed time of 180 seconds (mt=180). If engine speed falls below 2200 rpm or exceeds 2800 rmp for more than five seconds in any one excursion, or 15 seconds over all excursions, the mode timer shall reset to zero and resume timing.

(2) *Idle mode*—(i) *Ford Motor Company and Honda vehicles*. The engines of 1981–1987 Ford Motor Company vehicles and 1984–1985 Honda Preludes shall be shut off for not more than 10 seconds and restarted. This procedure may also be used for 1988–1989 Ford Motor Company vehicles but should not be used for other vehicles. The probe may be removed from the tailpipe or the sample pump turned off if necessary to reduce analyzer fouling during the restart procedure.

(ii) The mode timer shall start (mt=0) when the vehicle engine speed is between 350 and 1100 rpm. If engine speed exceeds 1100 rpm or falls below 350 rpm, the mode timer shall reset to zero and resume timing. The minimum idle mode length shall be determined as described in paragraph (I)(d)(2)(iii) of this appendix. The maximum idle mode length shall be 90 seconds elapsed time (mt=90).

(iii) The pass/fail analysis shall begin after an elapsed time of 10 seconds (mt=10). A pass or fail determination shall be made for the vehicle and the idle mode shall be terminated as follows:

(A) The vehicle shall pass the idle mode and the test shall be immediately terminated if, prior to an elapsed time of 30 seconds (mt=30), measured values are less than or equal to 100 ppm HC and 0.5 percent CO.

(B) The vehicle shall pass the idle mode and the test shall be terminated at the end of an elapsed time of 30 seconds (mt=30), if prior to that time the criteria of paragraph (I)(d)(2)(iii)(A) of this appendix are not satisfied and the measured values are less than or equal to the applicable short test standards as described in paragraph (I)(a)(2) of this appendix.

(C) The vehicle shall pass the idle mode and the test shall be immediately terminated if, at any point between an elapsed time of 30 seconds (mt=30) and 90 seconds (mt=90), measured values are less than or equal to the applicable short test standards described in paragraph (I)(a)(2) of this appendix.

(D) The vehicle shall fail the idle mode and the test shall be terminated if none of the provisions of paragraphs (I)(d)(2)(iii)(A), (d)(2)(iii)(B), and (d)(2)(iii)(C) of this appendix are satisfied by an elapsed time of 90 seconds (mt=90).

(II) Two Speed Idle Test

(a) *General requirements*—(1) *Exhaust gas sampling algorithm*. The analysis of exhaust gas concentrations shall begin 10 seconds after the applicable test mode begins. Exhaust gas concentrations shall be analyzed at a rate of two times per second. The measured value for pass/fail determinations shall be a simple running average of the measurements taken over five seconds.

(2) *Pass/fail determination*. A pass or fail determination shall be made for each applicable test mode based on a comparison of the short test standards contained in appendix C to this subpart, and the measured value for HC and CO as described in paragraph (II)(a)(1) of this appendix. A vehicle shall pass the test mode if any pair of simultaneous values for HC and CO are below or equal to the applicable short test standards. A vehicle shall fail the test mode if the values for either HC or CO, or both, in all simultaneous pairs of values are above the applicable standards.

(3) *Void test conditions*. The test shall immediately end and any exhaust gas measurements shall be voided if the measured concentration of CO plus CO_2 falls below six percent or the vehicle's engine stalls at any time during the test sequence.

(4) *Multiple exhaust pipes.* Exhaust gas concentrations from vehicle engines equipped with multiple exhaust pipes shall be sampled simultaneously.

(5) The test shall be immediately terminated upon reaching the overall maximum test time.

(b) *Test sequence.* (1) The test sequence shall consist of a first-chance test and a second-chance test as follows:

(i) The first-chance test, as described under paragraph (II)(c) of this appendix, shall consist of an idle mode followed by a high-speed mode.

(ii) The second-chance high-speed mode, as described under paragraph (II)(c) of this appendix, shall immediately follow the first-chance high-speed mode. It shall be performed only if the vehicle fails the first-chance test. The second-chance idle mode, as described under paragraph (II)(d) of this appendix, shall follow the second-chance high-speed mode and be performed only if the vehicle fails the idle mode of the first-chance test.

(2) The test sequence shall begin only after the following requirements are met:

(i) The vehicle shall be tested in as-received condition with the transmission in neutral or park and all accessories turned off. The engine shall be at normal operating temperature (as indicated by a temperature gauge, temperature lamp, touch test on the radiator hose, or other visual observation for overheating).

(ii) For all pre-1996 model year vehicles, a tachometer shall be attached to the vehicle in accordance with the analyzer manufacturer's instructions. For 1996 and newer model year vehicles the OBD data link connector will be used to monitor RPM. In the event that an OBD data link connector is not available or that an RPM signal is not available over the data link connector, a tachometer shall be used instead.

(iii) The sample probe shall be inserted into the vehicle's tailpipe to a minimum depth of 10 inches. If the vehicle's exhaust system prevents insertion to this depth, a tailpipe extension shall be used.

(iv) The measured concentration of CO plus CO_2 shall be greater than or equal to six percent.

(c) *First-chance test and second-chance high-speed mode.* The test timer shall start (tt=0) when the conditions specified in paragraph (b)(2) of this section are met. The first-chance test and second-chance high-speed mode shall have an overall maximum test time of 425 seconds (tt=425). The first-chance test shall consist of an idle mode followed immediately by a high-speed mode. This is followed immediately by an additional second-chance high-speed mode, if necessary.

(1) *First-chance idle mode.* (i) The mode timer shall start (mt=0) when the vehicle engine speed is between 350 and 1100 rpm. If engine speed exceeds 1100 rpm or falls below 350 rpm, the mode timer shall reset to zero and resume timing. The minimum idle mode length shall be determined as described in paragraph (II)(c)(1)(ii) of this appendix. The maximum idle mode length shall be 90 seconds elapsed time (mt=90).

(ii) The pass/fail analysis shall begin after an elapsed time of 10 seconds (mt=10). A pass or fail determination shall be made for the vehicle and the mode terminated as follows:

(A) The vehicle shall pass the idle mode and the mode shall be immediately terminated if, prior to an elapsed time of 30 seconds (mt=30), measured values are less than or equal to 100 ppm HC and 0.5 percent CO.

(B) The vehicle shall pass the idle mode and the mode shall be terminated at the end of an elapsed time of 30 seconds (mt=30) if, prior to that time, the criteria of paragraph (II)(c)(1)(ii)(A) of this appendix are not satisfied, and the measured values are less than or equal to the applicable short test standards as described in paragraph (II)(a)(2) of this appendix.

(C) The vehicle shall pass the idle mode and the mode shall be immediately terminated if, at any point between an elapsed time of 30 seconds (mt=30) and 90 seconds (mt=90), the measured values are less than or equal to the applicable short test standards as described in paragraph (II)(a)(2) of this appendix.

(D) The vehicle shall fail the idle mode and the mode shall be terminated if none of the provisions of paragraphs (II)(c)(1)(ii)(A), (B), and (C) of this appendix is satisfied by an elapsed time of 90 seconds (mt=90). Alternatively, the vehicle may be failed if the provisions of paragraphs (II)(c)(2)(i) and (ii) of this appendix are not met within an elapsed time of 30 seconds.

(E) *Optional.* The vehicle may fail the first-chance test and the second-chance test shall be omitted if no exhaust gas concentration less than 1800 ppm HC is found by an elapsed time of 30 seconds (mt=30).

(2) *First-chance and second-chance high-speed modes.* This mode includes both the first-chance and second-chance high-speed modes, and follows immediately upon termination of the first-chance idle mode.

(i) The mode timer shall reset (mt=0) when the vehicle engine speed is between 2200 and 2800 rpm. If engine speed falls below 2200 rpm or exceeds 2800 rpm for more than two seconds in one excursion, or more than six seconds over all excursions within 30 seconds of the final measured value used in the pass/fail determination, the measured value shall be invalidated and the mode continued. If any excursion lasts for more than ten seconds, the mode timer shall reset to zero (mt=0) and timing resumed. The minimum high-speed mode length shall be determined as described under paragraphs (II)(c)(2)(ii) and (iii) of this appendix. The maximum high-speed mode

length shall be 180 seconds elapsed time (mt=180).

(ii) *Ford Motor Company and Honda vehicles.* For 1981–1987 model year Ford Motor Company vehicles and 1984–1985 model year Honda Preludes, the pass/fail analysis shall begin after an elapsed time of 10 seconds (mt=10) using the following procedure. This procedure may also be used for 1988–1989 Ford Motor Company vehicles but should not be used for other vehicles.

(A) A pass or fail determination, as described below, shall be used, for vehicles that passed the idle mode, to determine whether the high-speed test should be terminated prior to or at the end of an elapsed time of 180 seconds (mt=180).

(*1*) The vehicle shall pass the high-speed mode and the test shall be immediately terminated if, prior to an elapsed time of 30 seconds (mt=30), the measured values are less than or equal to 100 ppm HC and 0.5 percent CO.

(*2*) The vehicle shall pass the high-speed mode and the test shall be terminated at the end of an elapsed time of 30 seconds (mt=30) if, prior to that time, the criteria of paragraph (II)(c)(2)(ii)(A)(*1*) of this appendix are not satisfied, and the measured values are less than or equal to the applicable short test standards as described in paragraph (II)(a)(2) of this appendix.

(*3*) The vehicle shall pass the high-speed mode and the test shall be immediately terminated if, at any point between an elapsed time of 30 seconds (mt=30) and 180 seconds (mt=180), the measured values are less than or equal to the applicable short test standards as described in paragraph (II)(a)(2) of this appendix.

(*4*) *Restart.* If at an elapsed time of 90 seconds (mt=90) the measured values are greater than the applicable short test standards as described in paragraph (II)(a)(2) of this appendix, the vehicle's engine shall be shut off for not more than 10 seconds after returning to idle and then shall be restarted. The probe may be removed from the tailpipe or the sample pump turned off if necessary to reduce analyzer fouling during the restart procedure. The mode timer will stop upon engine shut off (mt=90) and resume upon engine restart. The pass/fail determination shall resume as follows after 100 seconds have elapsed (mt=100).

(*i*) The vehicle shall pass the high-speed mode and the test shall be immediately terminated if, at any point between an elapsed time of 100 seconds (mt=100) and 180 seconds (mt=180), the measured values are less than or equal to the applicable short test standards described in paragraph (II)(a)(2) of this appendix.

(*ii*) The vehicle shall fail the high-speed mode and the test shall be terminated if paragraph (II)(c)(2)(ii)(A)(*4*)(*i*) of this appendix is not satisfied by an elapsed time of 180 seconds (mt=180).

(B) A pass or fail determination shall be made for vehicles that *failed* the idle mode and the high-speed mode terminated at the *end* of an elapsed time of 180 seconds (mt=180) as follows:

(*1*) The vehicle shall pass the high-speed mode and the mode shall be terminated at an elapsed time of 180 seconds (mt=180) if any measured values of HC and CO exhaust gas concentrations during the high-speed mode are less than or equal to the applicable short test standards as described in paragraph (II)(a)(2) of this appendix.

(*2*) *Restart.* If at an elapsed time of 90 seconds (mt=90) the measured values of HC and CO exhaust gas concentrations during the high-speed mode are greater than the applicable short test standards as described in paragraph (II)(a)(2) of this appendix, the vehicle's engine shall be shut off for not more than 10 seconds after returning to idle and then shall be restarted. The probe may be removed from the tailpipe or the sample pump turned off if necessary to reduce analyzer fouling during the restart procedure. The mode timer will stop upon engine shut off (mt=90) and resume upon engine restart. The pass/fail determination shall resume as follows after 100 seconds have elapsed (mt=100).

(*i*) The vehicle shall pass the high-speed mode and the mode shall be terminated at an elapsed time of 180 seconds (mt=180) if any measured values of HC and CO exhaust gas concentrations during the high-speed mode are less than or equal to the applicable short test standards as described in paragraph (II)(a)(2) of this appendix.

(*ii*) The vehicle shall fail the high-speed mode and the test shall be terminated if paragraph (II)(c)(2)(ii)(B)(*2*)(*i*) of this appendix is not satisfied by an elapsed time of 180 seconds (mt=180).

(*iii*) *All other light-duty motor vehicles.* The pass/fail analysis for vehicles not specified in paragraph (II)(c)(2)(ii) of this appendix shall begin after an elapsed time of 10 seconds (mt=10) using the following procedure.

(A) A pass or fail determination, as described below, shall be used for vehicles that passed the idle mode, to determine whether the high-speed mode should be terminated prior to or at the end of an elapsed time of 180 seconds (mt=180).

(*1*) The vehicle shall pass the high-speed mode and the test shall be immediately terminated if, prior to an elapsed time of 30 seconds (mt=30), any measured values are less than or equal to 100 ppm HC and 0.5 percent CO.

(*2*) The vehicle shall pass the high-speed mode and the test shall be terminated at the end of an elapsed time of 30 seconds (mt=30) if, prior to that time, the criteria of paragraph (II)(c)(2)(iii)(A)(*1*) of this appendix are not satisfied, and the measured values are

less than or equal to the applicable short test standards as described in paragraph (II)(a)(2) of this appendix.

(*3*) The vehicle shall pass the high-speed mode and the test shall be immediately terminated if, at any point between an elapsed time of 30 seconds (mt=30) and 180 seconds (mt=180), the measured values are less than or equal to the applicable short test standards as described in paragraph (II)(a)(2) of this appendix.

(*4*) The vehicle shall fail the high-speed mode and the test shall be terminated if none of the provisions of paragraphs (II)(c)(2)(iii)(A)(*1*), (*2*), and (*3*) of this appendix is satisfied by an elapsed time of 180 seconds (mt=180).

(B) A pass or fail determination shall be made for vehicles that *failed* the idle mode and the high-speed mode terminated at the *end* of an elapsed time of 180 seconds (mt=180) as follows:

(*1*) The vehicle shall pass the high-speed mode and the mode shall be terminated at an elapsed time of 180 seconds (mt=180) if any measured values are less than or equal to the applicable short test standards as described in paragraph (II)(a)(2) of this appendix.

(*2*) The vehicle shall fail the high-speed mode and the test shall be terminated if paragraph (II)(c)(2)(iii)(B)(*1*) of this appendix is not satisfied by an elapsed time of 180 seconds (mt=180).

(d) *Second-chance idle mode*. If the vehicle fails the first-chance idle mode and passes the high-speed mode, the test timer shall reset to zero (tt=0) and a second-chance idle mode shall commence. The second-chance idle mode shall have an overall maximum test time of 145 seconds (tt=145). The test shall consist of an idle mode only.

(1) The engines of 1981–1987 Ford Motor Company vehicles and 1984–1985 Honda Preludes shall be shut off for not more than 10 seconds and restarted. The probe may be removed from the tailpipe or the sample pump turned off if necessary to reduce analyzer fouling during the restart procedure. This procedure may also be used for 1988–1989 Ford Motor Company vehicles but should not be used for other vehicles.

(2) The mode timer shall start (mt=0) when the vehicle engine speed is between 350 and 1100 rpm. If the engine speed exceeds 1100 rpm or falls below 350 rpm the mode timer shall reset to zero and resume timing. The minimum second-chance idle mode length shall be determined as described in paragraph (II)(d)(3) of this appendix. The maximum second-chance idle mode length shall be 90 seconds elapsed time (mt=90).

(3) The pass/fail analysis shall begin after an elapsed time of 10 seconds (mt=10). A pass or fail determination shall be made for the vehicle and the second-chance idle mode shall be terminated as follows:

(i) The vehicle shall pass the second-chance idle mode and the test shall be immediately terminated if, prior to an elapsed time of 30 seconds (mt=30), any measured values are less than or equal to 100 ppm HC and 0.5 percent CO.

(ii) The vehicle shall pass the second-chance idle mode and the test shall be terminated at the end of an elapsed time of 30 seconds (mt=30) if, prior to that time, the criteria of paragraph (II)(d)(3)(i) of this appendix are not satisfied, and the measured values are less than or equal to the applicable short test standards as described in paragraph (II)(a)(2) of this appendix.

(iii) The vehicle shall pass the second-chance idle mode and the test shall be immediately terminated if, at any point between an elapsed time of 30 seconds (mt=30) and 90 seconds (mt=90), the measured values are less than or equal to the applicable short test standards as described in paragraph (II)(a)(2) of this appendix.

(iv) The vehicle shall fail the second-chance idle mode and the test shall be terminated if none of the provisions of paragraph (II)(d)(3)(i), (ii), and (iii) of this appendix is satisfied by an elapsed time of 90 seconds (mt=90).

(III) Loaded Test

(a) *General requirements*—(1) *Exhaust gas sampling algorithm*. The analysis of exhaust gas concentrations shall begin 10 seconds after the applicable test mode begins. Exhaust gas concentrations shall be analyzed at a minimum rate of two times per second. The measured value for pass/fail determinations shall be a simple running average of the measurements taken over five seconds.

(2) *Pass/fail determination*. A pass or fail determination shall be made for each applicable test mode based on a comparison of the short test standards contained in appendix C to this subpart and the measured value for HC and CO as described in paragraph (III)(a)(1) of this appendix. A vehicle shall pass the test mode if any pair of simultaneous values for HC and CO are below or equal to the applicable short test standards. A vehicle shall fail the test mode if the values for either HC or CO, or both, in all simultaneous pairs of values are above the applicable standards.

(3) *Void test conditions*. The test shall immediately end and any exhaust gas measurements shall be voided if the measured concentration of CO plus CO_2 falls below six percent or the vehicle's engine stalls at any time during the test sequence.

(4) *Multiple exhaust pipes*. Exhaust gas concentrations from vehicle engines equipped with multiple exhaust pipes shall be sampled simultaneously.

(5) The test shall be immediately terminated upon reaching the overall maximum test time.

(b) *Test sequence*. (1) The test sequence shall consist of a loaded mode using a chassis dynamometer followed immediately by an idle mode as described under paragraphs (III)(c)(1) and (2) of this appendix.

(2) The test sequence shall begin only after the following requirements are met:

(i) The dynamometer shall be warmed up, in stabilized operating condition, adjusted, and calibrated in accordance with the procedures of appendix A to this subpart. Prior to each test, variable-curve dynamometers shall be checked for proper setting of the road-load indicator or road-load controller.

(ii) The vehicle shall be tested in as-received condition with all accessories turned off. The engine shall be at normal operating temperature (as indicated by a temperature gauge, temperature lamp, touch test on the radiator hose, or other visual observation for overheating).

(iii) The vehicle shall be operated during each mode of the test with the gear selector in the following position:

(A) In drive for automatic transmissions and in second (or third if more appropriate) for manual transmissions for the loaded mode;

(B) In park or neutral for the idle mode.

(iv) For all pre-1996 model year vehicles, a tachometer shall be attached to the vehicle in accordance with the analyzer manufacturer's instructions. For 1996 and newer model year vehicles the OBD data link connector will be used to monitor RPM. In the event that an OBD data link connector is not available or that an RPM signal is not available over the data link connector, a tachometer shall be used instead.

(v) The sample probe shall be inserted into the vehicle's tailpipe to a minimum depth of 10 inches. If the vehicle's exhaust system prevents insertion to this depth, a tailpipe extension shall be used.

(vi) The measured concentration of CO plus CO_2 shall be greater than or equal to six percent.

(c) *Overall test procedure*. The test timer shall start (tt=0) when the conditions specified in paragraph (III)(b)(2) of this appendix are met and the mode timer initiates as specified in paragraph (III)(c)(1) of this appendix. The test sequence shall have an overall maximum test time of 240 seconds (tt=240). The test shall be immediately terminated upon reaching the overall maximum test time.

(1) *Loaded mode*—(i) *Ford Motor Company and Honda vehicles*. (Optional) The engines of 1981–1987 Ford Motor Company vehicles and 1984–1985 Honda Preludes shall be shut off for not more than 10 seconds and restarted. This procedure may also be used for 1988–1989 Ford Motor Company vehicles but should not be used for other vehicles. The probe may be removed from the tailpipe or the sample pump turned off if necessary to reduce analyzer fouling during the restart procedure.

(ii) The mode timer shall start (mt=0) when the dynamometer speed is within the limits specified for the vehicle engine size according to the following schedule. If the dynamometer speed falls outside the limits for more than five seconds in one excursion, or 15 seconds over all excursions, the mode timer shall reset to zero and resume timing. The minimum mode length shall be determined as described in paragraph (III)(c)(1)(iii)(A) of this appendix. The maximum mode length shall be 90 seconds elapsed time (mt=90).

DYNAMOMETER TEST SCHEDULE

Gasoline engine size (cylinders)	Roll speed (mph)	Normal loading (brake horsepower)
4 or less	22–25	2.8–4.1
5–6	29–32	6.8–8.4
7 or more	32–35	8.4–10.8

(iii) The pass/fail analysis shall begin after an elapsed time of 10 seconds (mt=10). A pass or fail determination shall be made for the vehicle and the mode shall be terminated as follows:

(A) The vehicle shall pass the loaded mode and the mode shall be immediately terminated if, at any point between an elapsed time of 30 seconds (mt=30) and 90 seconds (mt=90), measured values are less than or equal to the applicable short test standards described in paragraph (a)(2) of this section.

(B) The vehicle shall fail the loaded mode and the mode shall be terminated if paragraph (III)(c)(1)(iii)(A) of this appendix is not satisfied by an elapsed time of 90 seconds (mt=90).

(C) *Optional*. The vehicle may fail the loaded mode and any subsequent idle mode shall be omitted if no exhaust gas concentration less than 1800 ppm HC is found by an elapsed time of 30 seconds (mt=30).

(2) *Idle mode*—(i) *Ford Motor Company and Honda vehicles*. (Optional) The engines of 1981–1987 Ford Motor Company vehicles and 1984–1985 Honda Preludes shall be shut off for not more than 10 seconds and restarted. This procedure may also be used for 1988–1989 Ford Motor Company vehicles but should not be used for other vehicles. The probe may be removed from the tailpipe or the sample pump turned off if necessary to reduce analyzer fouling during the restart procedure.

(ii) The mode timer shall start (mt=0) when the dynamometer speed is zero and the vehicle engine speed is between 350 and 1100 rpm. If engine speed exceeds 1100 rpm or falls below 350 rpm, the mode timer shall reset to zero and resume timing. The minimum idle mode length shall be determined as described in paragraph (II)(c)(2)(ii) of this appendix.

The maximum idle mode length shall be 90 seconds elapsed time (mt=90).

(iii) The pass/fail analysis shall begin after an elapsed time of 10 seconds (mt=10). A pass or fail determination shall be made for the vehicle and the mode shall be terminated as follows:

(A) The vehicle shall pass the idle mode and the test shall be immediately terminated if, prior to an elapsed time of 30 seconds (mt=30), measured values are less than or equal to 100 ppm HC and 0.5 percent CO.

(B) The vehicle shall pass the idle mode and the test shall be terminated at the end of an elapsed time of 30 seconds (mt=30) if, prior to that time, the criteria of paragraph (III)(c)(2)(iii)(A) of this appendix are not satisfied, and the measured values are less than or equal to the applicable short test standards as described in paragraph (III)(a)(2) of this appendix.

(C) The vehicle shall pass the idle mode and the test shall be immediately terminated if, at any point between an elapsed time of 30 seconds (mt=30) and 90 seconds (mt=90), measured values are less than or equal to the applicable short test standards described in paragraph (III)(a)(2) of this appendix.

(D) The vehicle shall fail the idle mode and the test shall be terminated if none of the provisions of paragraphs (III)(c)(2)(iii)(A), (c)(2)(iii)(B), and (c)(2)(iii)(C) of this appendix is satisfied by an elapsed time of 90 seconds (mt=90).

(IV) Preconditioned IDLE TEST

(a) *General requirements*—(1) *Exhaust gas sampling algorithm.* The analysis of exhaust gas concentrations shall begin 10 seconds after the applicable test mode begins. Exhaust gas concentrations shall be analyzed at a minimum rate of two times per second. The measured value for pass/fail determinations shall be a simple running average of the measurements taken over five seconds.

(2) *Pass/fail determination.* A pass or fail determination shall be made for each applicable test mode based on a comparison of the short test standards contained in appendix C to this subpart, and the measured value for HC and CO as described in paragraph (IV)(a)(1) of this appendix. A vehicle shall pass the test mode if any pair of simultaneous values for HC and CO are below or equal to the applicable short test standards. A vehicle shall fail the test mode if the values for either HC or CO, or both, in all simultaneous pairs of values are above the applicable standards.

(3) *Void test conditions.* The test shall immediately end and any exhaust gas measurements shall be voided if the measured concentration of CO plus CO_2 falls below six percent or the vehicle's engine stalls at any time during the test sequence.

(4) *Multiple exhaust pipes.* Exhaust gas concentrations from vehicle engines equipped with multiple exhaust pipes shall be sampled simultaneously.

(5) The test shall be immediately terminated upon reaching the overall maximum test time.

(b) *Test sequence.* (1) The test sequence shall consist of a first-chance test and a second-chance test as follows:

(i) The first-chance test, as described under paragraph (IV)(c) of this appendix, shall consist of a preconditioning mode followed by an idle mode.

(ii) The second-chance test, as described under paragraph (IV)(d) of this appendix, shall be performed only if the vehicle fails the first-chance test.

(2) The test sequence shall begin only after the following requirements are met:

(i) The vehicle shall be tested in as-received condition with the transmission in neutral or park and all accessories turned off. The engine shall be at normal operating temperature (as indicated by a temperature gauge, temperature lamp, touch test on the radiator hose, or other visual observation for overheating).

(ii) For all pre-1996 model year vehicles, a tachometer shall be attached to the vehicle in accordance with the analyzer manufacturer's instructions. For 1996 and newer model year vehicles the OBD data link connector will be used to monitor RPM. In the event that an OBD data link connector is not available or that an RPM signal is not available over the data link connector, a tachometer shall be used instead.

(iii) The sample probe shall be inserted into the vehicle's tailpipe to a minimum depth of 10 inches. If the vehicle's exhaust system prevents insertion to this depth, a tailpipe extension shall be used.

(iv) The measured concentration of CO plus CO2 shall be greater than or equal to six percent.

(c) *First-chance test.* The test timer shall start (tt=0) when the conditions specified in paragraph (IV)(b)(2) of this appendix are met. The test shall have an overall maximum test time of 200 seconds (tt=200). The first-chance test shall consist of a preconditioning mode followed immediately by an idle mode.

(1) *Preconditioning mode.* The mode timer shall start (mt=0) when the engine speed is between 2200 and 2800 rpm. The mode shall continue for an elapsed time of 30 seconds (mt=30). If engine speed falls below 2200 rpm or exceeds 2800 rpm for more than five seconds in any one excursion, or 15 seconds over all excursions, the mode timer shall reset to zero and resume timing.

(2) *Idle mode.* (i) The mode timer shall start (mt=0) when the vehicle engine speed is between 350 and 1100 rpm. If engine speed exceeds 1100 rpm or falls below 350 rpm, the mode timer shall reset to zero and resume

timing. The minimum idle mode length shall be determined as described in paragraph (IV)(c)(2)(ii) of this appendix. The maximum idle mode length shall be 90 seconds elapsed time (mt=90).

(ii) The pass/fail analysis shall begin after an elapsed time of 10 seconds (mt=10). A pass or fail determination shall be made for the vehicle and the mode shall be terminated as follows:

(A) The vehicle shall pass the idle mode and the test shall be immediately terminated if, prior to an elapsed time of 30 seconds (mt=30), measured values are less than or equal to 100 ppm HC and 0.5 percent CO.

(B) The vehicle shall pass the idle mode and the test shall be terminated at the end of an elapsed time of 30 seconds (mt=30) if, prior to that time, the criteria of paragraph (IV)(c)(2)(ii)(A) of this appendix are not satisfied, and the measured values are less than or equal to the applicable short test standards as described in paragraph (IV)(a)(2) of this appendix.

(C) The vehicle shall pass the idle mode and the test shall be immediately terminated if, at any point between an elapsed time of 30 seconds (mt=30) and 90 seconds (mt=90), measured values are less than or equal to the applicable short test standards as described in paragraph (IV)(a)(2) of this section.

(D) The vehicle shall fail the idle mode and the test shall be terminated if none of the provisions of paragraphs (IV)(c)(2)(ii)(A), (B), and (C) of this appendix is satisfied by an elapsed time of 90 seconds (mt=90). Alternatively, the vehicle may be failed if the provisions of paragraphs (IV)(c)(2) (i) and (ii) of this appendix are not met within an elapsed time of 30 seconds.

(E) *Optional.* The vehicle may fail the first-chance test and the second-chance test shall be omitted if no exhaust gas concentration less than 1800 ppm HC is found at an elapsed time of 30 seconds (mt=30).

(d) *Second-chance test.* If the vehicle fails the first-chance test, the test timer shall reset to zero and a second-chance test shall be performed. The second-chance test shall have an overall maximum test time of 425 seconds. The test shall consist of a preconditioning mode followed immediately by an idle mode.

(1) *Preconditioning mode.* The mode timer shall start (mt=0) when engine speed is between 2200 and 2800 rpm. The mode shall continue for an elapsed time of 180 seconds (mt=180). If the engine speed falls below 2200 rpm or exceeds 2800 rpm for more than five seconds in any one excursion, or 15 seconds over all excursions, the mode timer shall reset to zero and resume timing.

(2) *Idle mode*—(i) *Ford Motor Company and Honda vehicles.* The engines of 1981–1987 Ford Motor Company vehicles and 1984–1985 Honda Preludes shall be shut off for not more than 10 seconds and then shall be restarted. The probe may be removed from the tailpipe or the sample pump turned off if necessary to reduce analyzer fouling during the restart procedure. This procedure may also be used for 1988–1989 Ford Motor Company vehicles but should not be used for other vehicles.

(ii) The mode timer shall start (mt=0) when the vehicle engine speed is between 350 and 1100 rpm. If the engine speed exceeds 1100 rpm or falls below 350 rpm, the mode timer shall reset to zero and resume timing. The minimum idle mode length shall be determined as described in paragraph (IV)(d)(2)(iii) of this appendix. The maximum idle mode length shall be 90 seconds elapsed time (mt=90).

(iii) The pass/fail analysis shall begin after an elapsed time of 10 seconds (mt=10). A pass or fail determination shall be made for the vehicle and the mode shall be terminated as follows:

(A) The vehicle shall pass the idle mode and the test shall be immediately terminated if, prior to an elapsed time of 30 seconds (mt=30), measured values are less than or equal to 100 ppm HC and 0.5 percent CO.

(B) The vehicle shall pass the idle mode and the test shall be terminated at the end of an elapsed time of 30 seconds (mt=30) if, prior to that time, the criteria of paragraph (IV)(d)(2)(iii)(A) of this appendix are not satisfied, and the measured values are less than or equal to the applicable short test standards as described in paragraph (IV)(a)(2) of this appendix.

(C) The vehicle shall pass the idle mode and the test shall be immediately terminated if, at any point between an elapsed time of 30 seconds (mt=30) and 90 seconds (mt=90), measured values are less than or equal to the applicable short test standards described in paragraph (IV)(a)(2) of this appendix.

(D) The vehicle shall fail the idle mode and the test shall be terminated if none of the provisions of paragraphs (IV)(d)(2)(iii) (A), (B), and (C) of this appendix is satisfied by an elapsed time of 90 seconds (mt=90).

(V) Idle Test With Loaded Preconditioning

(a) *General requirements*—(1) *Exhaust gas sampling algorithm.* The analysis of exhaust gas concentrations shall begin 10 seconds after the applicable test mode begins. Exhaust gas concentrations shall be analyzed at a minimum rate of two times per second. The measured value for pass/fail determinations shall be a simple running average of the measurements taken over five seconds.

(2) *Pass/fail determination.* A pass or fail determination shall be made for each applicable test mode based on a comparison of the short test standards contained in appendix C to this subpart, and the measured value for HC and CO as described in paragraph (V)(a)(1) of this appendix. A vehicle shall

pass the test mode if any pair of simultaneous values for HC and CO are below or equal to the applicable short test standards. A vehicle shall fail the test mode if the values for either HC or CO, or both, in all simultaneous pairs of values are above the applicable standards.

(3) *Void test conditions.* The test shall immediately end and any exhaust gas measurements shall be voided if the measured concentration of CO plus CO_2 falls below six percent or the vehicle's engine stalls at any time during the test sequence.

(4) *Multiple exhaust pipes.* Exhaust gas concentrations from vehicle engines equipped with multiple exhaust pipes shall be sampled simultaneously.

(5) The test shall be immediately terminated upon reaching the overall maximum test time.

(b) *Test sequence.* (1) The test sequence shall consist of a first-chance test and a second-chance test as follows:

(i) The first-chance test, as described under paragraph (V)(c) of this appendix, shall consist of an idle mode.

(ii) The second-chance test as described under paragraph (V)(d) of this appendix shall be performed only if the vehicle fails the first-chance test.

(2) The test sequence shall begin only after the following requirements are met:

(i) The dynamometer shall be warmed up, in stabilized operating condition, adjusted, and calibrated in accordance with the procedures of appendix A to this subpart. Prior to each test, variable-curve dynamometers shall be checked for proper setting of the road-load indicator or road-load controller.

(ii) The vehicle shall be tested in as-received condition with all accessories turned off. The engine shall be at normal operating temperature (as indicated by a temperature gauge, temperature lamp, touch test on the radiator hose, or other visual observation for overheating).

(iii) The vehicle shall be operated during each mode of the test with the gear selector in the following position:

(A) In drive for automatic transmissions and in second (or third if more appropriate) for manual transmissions for the loaded preconditioning mode;

(B) In park or neutral for the idle mode.

(iv) For all pre-1996 model year vehicles, a tachometer shall be attached to the vehicle in accordance with the analyzer manufacturer's instructions. For 1996 and newer model year vehicles the OBD data link connector will be used to monitor RPM. In the event that an OBD data link connector is not available or that an RPM signal is not available over the data link connector, a tachometer shall be used instead.

(v) The sample probe shall be inserted into the vehicle's tailpipe to a minimum depth of 10 inches. If the vehicle's exhaust system prevents insertion to this depth, a tailpipe extension shall be used.

(vi) The measured concentration of CO plus CO_2 shall be greater than or equal to six percent.

(c) *First-chance test.* The test timer shall start (tt=0) when the conditions specified in paragraph (V)(b)(2) of this appendix are met. The test shall have an overall maximum test time of 155 seconds (tt=155). The first-chance test shall consist of an idle mode only.

(1) The mode timer shall start (mt=0) when the vehicle engine speed is between 350 and 1100 rpm. If the engine speed exceeds 1100 rpm or falls below 350 rpm, the mode timer shall reset to zero and resume timing. The minimum mode length shall be determined as described in paragraph (V)(c)(2) of this appendix. The maximum mode length shall be 90 seconds elapsed time (mt=90).

(2) The pass/fail analysis shall begin after an elapsed time of 10 seconds (mt=10). A pass or fail determination shall be made for the vehicle and the mode shall be terminated as follows:

(i) The vehicle shall pass the idle mode and the test shall be immediately terminated if, prior to an elapsed time of 30 seconds (mt=30), measured values are less than or equal to 100 ppm HC and 0.5 percent CO.

(ii) The vehicle shall pass the idle mode and the test shall be terminated at the end of an elapsed time of 30 seconds (mt=30) if, prior to that time, the criteria of paragraph (V)(c)(2)(i) of this appendix are not satisfied, and the measured values are less than or equal to the applicable short test standards as described in paragraph (V)(a)(2) of this appendix.

(iii) The vehicle shall pass the idle mode and the test shall be immediately terminated if, at any point between an elapsed time of 30 seconds (mt=30) and 90 seconds (mt=90), the measured values are less than or equal to the applicable short test standards as described in paragraph (V)(a)(2) of this appendix.

(iv) The vehicle shall fail the idle mode and the test shall be terminated if none of the provisions of paragraphs (V)(c)(2)(i), (ii), and (iii) of this appendix is satisfied by an elapsed time of 90 seconds (mt=90). Alternatively, the vehicle may be failed if the provisions of paragraphs (V)(c)(2) (i) and (ii) of this appendix are not met within an elapsed time of 30 seconds.

(v) *Optional.* The vehicle may fail the first-chance test and the second-chance test shall be omitted if no exhaust gas concentration less than 1800 ppm HC is found at an elapsed time of 30 seconds (mt=30).

(d) *Second-chance test.* If the vehicle fails the first-chance test, the test timer shall reset to zero (tt=0) and a second-chance test shall be performed. The second-chance test shall have an overall maximum test time of 200 seconds (tt=200). The test shall consist of

a preconditioning mode using a chassis dynamometer, followed immediately by an idle mode.

(1) *Preconditioning mode.* The mode timer shall start (mt=0) when the dynamometer speed is within the limits specified for the vehicle engine size in accordance with the following schedule. The mode shall continue for a minimum elapsed time of 30 seconds (mt=30). If the dynamometer speed falls outside the limits for more than five seconds in one excursion, or 15 seconds over all excursions, the mode timer shall reset to zero and resume timing.

Gasoline engine size (cylinders)	Dynamometer test schedule	
	Roll speed (mph)	Normal loading (brake horsepower)
4 or less	22–25	2.8–4.1
5–6	29–32	6.8–8.4
7 or more	32–35	8.4–10.8

(2) *Idle mode.* (i) *Ford Motor Company and Honda vehicles.* (Optional) The engines of 1981–1987 Ford Motor Company vehicles and 1984–1985 Honda Preludes shall be shut off for not more than 10 seconds and restarted. This procedure may also be used for 1988–1989 Ford Motor Company vehicles but should not be used for other vehicles. The probe may be removed from the tailpipe or the sample pump turned off if necessary to reduce analyzer fouling during the restart procedure.

(ii) The mode timer shall start (mt=0) when the dynamometer speed is zero and the vehicle engine speed is between 350 and 1100 rpm. If the engine speed exceeds 1100 rpm or falls below 350 rpm, the mode timer shall reset to zero and resume timing. The minimum idle mode length shall be determined as described in paragraph (V)(d)(2)(ii) of this appendix. The maximum idle mode length shall be 90 seconds elapsed time (mt=90).

(iii) The pass/fail analysis shall begin after an elapsed time of 10 seconds (mt=10). A pass or fail determination shall be made for the vehicle and the mode shall be terminated as follows:

(A) The vehicle shall pass the idle mode and the test shall be immediately terminated if, prior to an elapsed time of 30 seconds (mt=30), measured values are less than or equal to 100 ppm HC and 0.5 percent CO.

(B) The vehicle shall pass the idle mode and the test shall be terminated at the end of an elapsed time of 30 seconds (mt=30) if, prior to that time, the criteria of paragraph (V)(d)(2)(ii)(A) of this appendix are not satisfied, and the measured values are less than or equal to the applicable short test standards as described in paragraph (V)(a)(2) of this appendix.

(C) The vehicle shall pass the idle mode and the test shall be immediately terminated if, at any point between an elapsed time of 30 seconds (mt=30) and 90 seconds (mt=90), the measured values are less than or equal to the applicable short test standards as described in paragraph (V)(a)(2) of this appendix.

(D) The vehicle shall fail the idle mode and the test shall be terminated if none of the provisions of paragraphs (V)(d)(2)(ii)(A), (B), and (C) of this appendix is satisfied by an elapsed time of 90 seconds (mt=90).

(VI) Preconditioned Two Speed Idle Test

(a) *General requirements*—(1) *Exhaust gas sampling algorithm.* The analysis of exhaust gas concentrations shall begin 10 seconds after the applicable test mode begins. Exhaust gas concentrations shall be analyzed at a minimum rate of two times per second. The measured value for pass/fail determinations shall be a simple running average of the measurements taken over five seconds.

(2) *Pass/fail determination.* A pass or fail determination shall be made for each applicable test mode based on a comparison of the short test standards contained in appendix C to this subpart, and the measured value for HC and CO as described in paragraph (VI)(a)(1) of this appendix. A vehicle shall pass the test mode if any pair of simultaneous values for HC and CO are below or equal to the applicable short test standards. A vehicle shall fail the test mode if the values for either HC or CO, or both, in all simultaneous pairs of values are above the applicable standards.

(3) *Void test conditions.* The test shall immediately end and any exhaust gas measurements shall be voided if the measured concentration of CO plus CO_2 falls below six percent or the vehicle's engine stalls at any time during the test sequence.

(4) *Multiple exhaust pipes.* Exhaust gas concentrations from vehicle engines equipped with multiple exhaust pipes shall be sampled simultaneously.

(5) The test shall be immediately terminated upon reaching the overall maximum test time.

(b) *Test sequence.* (1) The test sequence shall consist of a first-chance test and a second-chance test as follows:

(i) The first-chance test, as described under paragraph (VI)(c) of this appendix, shall consist of a first-chance high-speed mode followed immediately by a first-chance idle mode.

(ii) The second-chance test as described under paragraph (VI)(d) of this appendix shall be performed only if the vehicle fails the first-chance test.

(2) The test sequence shall begin only after the following requirements are met:

(i) The vehicle shall be tested in as-received condition with the transmission in

neutral or park and all accessories turned off. The engine shall be at normal operating temperature (as indicated by a temperature gauge, temperature lamp, touch test on the radiator hose, or other visual observation for overheating).

(ii) For all pre-1996 model year vehicles, a tachometer shall be attached to the vehicle in accordance with the analyzer manufacturer's instructions. For 1996 and newer model year vehicles the OBD data link connector will be used to monitor rpm. In the event that an OBD data link connector is not available or that an rpm signal is not available over the data link connector, a tachometer shall be used instead.

(iii) The sample probe shall be inserted into the vehicle's tailpipe to a minimum depth of 10 inches. If the vehicle's exhaust system prevents insertion to this depth, a tailpipe extension shall be used.

(iv) The measured concentration of CO plus CO_2 shall be greater than or equal to six percent.

(c) *First-chance test.* The test timer shall start (tt=0) when the conditions specified in paragraph (VI)(b)(2) of this appendix are met. The test shall have an overall maximum test time of 290 seconds (tt=290). The first-chance test shall consist of a high-speed mode followed immediately by an idle mode.

(1) *First-chance high-speed mode.* (i) The mode timer shall reset (mt=0) when the vehicle engine speed is between 2200 and 2800 rpm. If the engine speed falls below 2200 rpm or exceeds 2800 rpm for more than two seconds in one excursion, or more than six seconds over all excursions within 30 seconds of the final measured value used in the pass/fail determination, the measured value shall be invalidated and the mode continued. If any excursion lasts for more than ten seconds, the mode timer shall reset to zero (mt=0) and timing resumed. The high-speed mode length shall be 90 seconds elapsed time (mt=90).

(ii) The pass/fail analysis shall begin after an elapsed time of 10 seconds (mt=10). A pass or fail determination shall be made for the vehicle and the mode shall be terminated as follows:

(A) The vehicle shall pass the high-speed mode and the mode shall be terminated at an elapsed time of 90 seconds (mt=90) if any measured values are less than or equal to the applicable short test standards as described in paragraph (VI)(a)(2) of this appendix.

(B) The vehicle shall fail the high-speed mode and the mode shall be terminated if the requirements of paragraph (VI)(c)(1)(ii)(A) of this appendix are not satisfied by an elapsed time of 90 seconds (mt=90).

(C) *Optional.* The vehicle shall fail the first-chance test and any subsequent test shall be omitted if no exhaust gas concentration lower than 1800 ppm HC is found at an elapsed time of 30 seconds (mt=30).

(2) *First-chance idle mode.* (i) The mode timer shall start (mt=0) when the vehicle engine speed is between 350 and 1100 rpm. If the engine speed exceeds 1100 rpm or falls below 350 rpm, the mode timer shall reset to zero and resume timing. The minimum first-chance idle mode length shall be determined as described in paragraph (VI)(c)(2)(ii) of this appendix. The maximum first-chance idle mode length shall be 90 seconds elapsed time (mt=90).

(ii) The pass/fail analysis shall begin after an elapsed time of 10 seconds (mt=10). A pass or fail determination shall be made for the vehicle and the mode shall be terminated as follows:

(A) The vehicle shall pass the idle mode and the test shall be immediately terminated if, prior to an elapsed time of 30 seconds (mt=30), measured values are less than or equal to 100 ppm HC and 0.5 percent CO.

(B) The vehicle shall pass the idle mode and the test shall be terminated at the end of an elapsed time of 30 seconds (mt=30) if, prior to that time, the criteria of paragraph (VI)(c)(2)(ii)(A) of this appendix are not satisfied, and the measured values are less than or equal to the applicable short test standards as described in paragraph (VI)(a)(2) of this appendix.

(C) The vehicle shall pass the idle mode and the test shall be immediately terminated if, at any point between an elapsed time of 30 seconds (mt=30) and 90 seconds (mt=90), the measured values are less than or equal to the applicable short test standards as described in paragraph (VI)(a)(2) of this appendix.

(D) The vehicle shall fail the idle mode and the test shall be terminated if none of the provisions of paragraphs (VI)(c)(2)(ii) (A), (B), and (C) of this appendix is satisfied by an elapsed time of 90 seconds (mt=90). Alternatively, the vehicle may be failed if the provisions of paragraphs (VI)(c)(2)(i) and (ii) of this appendix are not met within the elapsed time of 30 seconds.

(d) *Second-chance test.* (1) If the vehicle fails either mode of the first-chance test, the test timer shall reset to zero (tt=0) and a second-chance test shall commence. The second-chance test shall be performed based on the first-chance test failure mode or modes as follows:

(A) If the vehicle failed only the first-chance high-speed mode, the second-chance test shall consist of a second-chance high-speed mode as described in paragraph (VI)(d)(2) of this appendix. The overall maximum test time shall be 280 seconds (tt=280).

(B) If the vehicle failed only the first-chance idle mode, the second-chance test shall consist of a second-chance pre-conditioning mode followed immediately by a second-chance idle mode as described in paragraphs (VI)(d) (3) and (4) of this appendix.

The overall maximum test time shall be 425 seconds (tt=425).

(C) If both the first-chance high-speed mode and first-chance idle mode were failed, the second-chance test shall consist of the second-chance high-speed mode followed immediately by the second-chance idle mode as described in paragraphs (VI)(d) (2) and (4) of this appendix. However, if during this second-chance procedure the vehicle fails the second-chance high-speed mode, then the second-chance idle mode may be eliminated. The overall maximum test time shall be 425 seconds (tt=425).

(2) *Second-chance high-speed mode*—(i) *Ford Motor Company and Honda vehicles*. The engines of 1981–1987 Ford Motor Company vehicles and 1984–1985 Honda Preludes shall be shut off for not more than 10 seconds and then shall be restarted. The probe may be removed from the tailpipe or the sample pump turned off if necessary to reduce analyzer fouling during the restart procedure. This procedure may also be used for 1988–1989 Ford Motor Company vehicles but should not be used for other vehicles.

(ii) The mode timer shall reset (mt=0) when the vehicle engine speed is between 2200 and 2800 rpm. If the engine speed falls below 2200 rpm or exceeds 2800 rpm for more than two seconds in one excursion, or more than six seconds over all excursions within 30 seconds of the final measured value used in the pass/fail determination, the measured value shall be invalidated and the mode continued. The minimum second-chance high-speed mode length shall be determined as described in paragraphs (VI)(d)(2) (iii) and (iv) of this appendix. If any excursion lasts for more than ten seconds, the mode timer shall reset to zero (mt=0) and timing resumed. The maximum second-chance high-speed mode length shall be 180 seconds elapsed time (mt=180).

(iii) In the case where the second-chance high-speed mode is *not* followed by the second-chance idle mode, the pass/fail analysis shall begin after an elapsed time of 10 seconds (mt=10). A pass or fail determination shall be made for the vehicle and the mode shall be terminated as follows:

(A) The vehicle shall pass the high-speed mode and the test shall be immediately terminated if, prior to an elapsed time of 30 seconds (mt=30), measured values are less than or equal to 100 ppm HC and 0.5 percent CO.

(B) The vehicle shall pass the high-speed mode and the test shall be terminated if at the end of an elapsed time of 30 seconds (mt=30) if, prior to that time, the criteria of paragraph (VI)(d)(2)(iii)(A) of this appendix are not satisfied, and the measured values are less than or equal to the applicable short test standards as described in paragraph (VI)(a)(2) of this appendix.

(C) The vehicle shall pass the high-speed mode and the test shall be immediately terminated if, at any point between an elapsed time for 30 seconds (mt=30) and 180 seconds (mt=180), the measured values are less than or equal to the applicable short test standards as described in paragraph (VI)(a)(2) of this appendix.

(D) The vehicle shall fail the high-speed mode and the test shall be terminated if none of the provisions of paragraphs (VI)(d)(2)(iii) (A), (B), and (C) of this appendix is satisfied by an elapsed time of 180 seconds (mt=180).

(iv) In the case where the second-chance high-speed mode *is* followed by the second-chance idle mode, the pass/fail analysis shall begin after an elapsed time of 10 seconds (mt=10). A pass or fail determination shall be made for the vehicle and the mode shall be terminated as follows:

(A) The vehicle shall pass the high-speed mode and the mode shall be terminated at the end of an elapsed time of 180 seconds (mt=180) if any measured values are less than or equal to the applicable short test standards as described in paragraph (VI)(a)(2) of this appendix.

(B) The vehicle shall fail the high-speed mode and the mode shall be terminated if paragraph (VI)(d)(2)(iv)(A) of this appendix is not satisfied by an elapsed time of 180 seconds (mt=180).

(3) *Second-chance preconditioning mode*. The mode timer shall start (mt=0) when engine speed is between 2200 and 2800 rpm. The mode shall continue for an elapsed time of 180 seconds (mt=180). If the engine speed falls below 2200 rpm or exceeds 2800 rpm for more than five seconds in any one excursion, or 15 seconds over all excursions, the mode timer shall reset to zero and resume timing.

(4) *Second-chance idle mode*—(i) *Ford Motor Company and Honda vehicles*. The engines of 1981–1987 Ford Motor Company vehicles and 1984–1985 Honda Preludes shall be shut off for not more than 10 seconds and then shall be restarted. The probe may be removed from the tailpipe or the sample pump turned off if necessary to reduce analyzer fouling during the restart procedure. This procedure may also be used for 1988–1989 Ford Motor Company vehicles but should not be used for other vehicles.

(ii) The mode timer shall start (mt=0) when the vehicle engine speed is between 350 and 1100 rpm. If the engine exceeds 1100 rpm or falls below 350 rpm the mode timer shall reset to zero and resume timing. The minimum second-chance idle mode length shall be determined as described in paragraph (VI)(d)(4)(iii) of this appendix. The maximum second-chance idle mode length shall be 90 seconds elapsed time (mt=90).

(iii) The pass/fail analysis shall begin after an elapsed time of 10 seconds (mt=10). A pass or fail determination shall be made for the vehicle and the mode shall be terminated as follows:

(A) The vehicle shall pass the second-chance idle mode and the test shall be immediately terminated if, prior to an elapsed time of 30 seconds (mt=30), measured values are less than or equal to 100 ppm HC and 0.5 percent CO.

(B) The vehicle shall pass the second-chance idle mode and the test shall be terminated at the end of an elapsed time of 30 seconds (mt=30) if, prior to that time, the criteria of paragraph (VI)(d)(4)(iii)(A) of this appendix are not satisfied, and the measured values are less than or equal to the applicable short test standards as described in paragraph (VI)(a)(2) of this appendix.

(C) The vehicle shall pass the second-chance idle mode and the test shall be immediately terminated if, at any point between an elapsed time of 30 seconds (mt=30) and 90 seconds (mt=90), measured values are less than or equal to the applicable short test standards described in paragraph (VI)(a)(2) of this appendix.

(D) The vehicle shall fail the second-chance idle mode and the test shall be terminated if none of the provisions of paragraphs (VI)(d)(4)(iii) (A), (B), and (C) of this appendix is satisfied by an elapsed time of 90 seconds (mt=90).

[57 FR 52987, Nov. 5, 1992, as amended at 61 FR 40946, Aug. 6, 1996]

APPENDIX C TO SUBPART S OF PART 51—STEADY-STATE SHORT TEST STANDARDS

(I) Short Test Standards for 1981 and Later Model Year Light-Duty Vehicles

For 1981 and later model year light-duty vehicles for which any of the test procedures described in appendix B to this subpart are utilized to establish Emissions Performance Warranty eligibility (*i.e.*, 1981 and later model year light-duty vehicles at low altitude and 1982 and later model year vehicles at high altitude to which high altitude certification standards of 1.5 gpm HC and 15 gpm CO or less apply), short test emissions for all tests and test modes shall not exceed:

(a) Hydrocarbons: 220 ppm as hexane.

(b) Carbon monoxide: 1.2%.

(II) Short Test Standards for 1981 and Later Model Year Light-Duty Trucks

For 1981 and later model year light-duty trucks for which any of the test procedures described in appendix B to this subpart are utilized to establish Emissions Performance Warranty eligibility (*i.e.*, 1981 and later model year light-duty trucks at low altitude and 1982 and later model year trucks at high altitude to which high altitude certification standards of 2.0 gpm HC and 26 gpm CO or less apply), short test emissions for all tests and test modes shall not exceed:

(a) Hydrocarbons: 220 ppm as hexane.

(b) Carbon monoxide: 1.2%.

APPENDIX D TO SUBPART S OF PART 51—STEADY-STATE SHORT TEST EQUIPMENT

(I) Steady-State Test Exhaust Analysis System

(a) *Sampling system*—(1) *General requirements*. The sampling system for steady-state short tests shall, at a minimum, consist of a tailpipe probe, a flexible sample line, a water removal system, particulate trap, sample pump, flow control components, tachometer or dynamometer, analyzers for HC, CO, and CO_2, and digital displays for exhaust concentrations of HC, CO, and CO_2, and engine rpm. Materials that are in contact with the gases sampled shall not contaminate or change the character of the gases to be analyzed, including gases from alcohol fueled vehicles. The probe shall be capable of being inserted to a depth of at least ten inches into the tailpipe of the vehicle being tested, or into an extension boot if one is used. A digital display for dynamometer speed and load shall be included if the test procedures described in appendix B to this subpart, paragraphs (III) and (V), are conducted. Minimum specifications for optional NO analyzers are also described in this appendix. The analyzer system shall be able to test, as specified in at least one section in appendix B to this subpart, all model vehicles in service at the time of sale of the analyzer.

(2) *Temperature operating range*. The sampling system and all associated hardware shall be of a design certified to operate within the performance specifications described in paragraph (I)(b) of this appendix in ambient air temperatures ranging from 41 to 110 degrees Fahrenheit. The analyzer system shall, where necessary, include features to keep the sampling system within the specified range.

(3) *Humidity operating range*. The sampling system and all associated hardware shall be of a design certified to operate within the performance specifications described in paragraph (I)(b) of this appendix at a minimum of 80 percent relative humidity throughout the required temperature range.

(4) *Barometric pressure compensation*. Barometric pressure compensation shall be provided. Compensation shall be made for elevations up to 6,000 feet (above mean sea level). At any given altitude and ambient conditions specified in paragraph (I)(b) of this appendix, errors due to barometric pressure changes of ±2 inches of mercury shall not exceed the accuracy limits specified in paragraph (I)(b) of this appendix.

(5) *Dual sample probe requirements*. When testing a vehicle with dual exhaust pipes, a dual sample probe of a design certified by the analyzer manufacturer to provide equal flow in each leg shall be used. The equal flow requirement is considered to be met if the flow rate in each leg of the probe has been measured under two sample pump flow rates (the

normal rate and a rate equal to the onset of low flow), and if the flow rates in each of the legs are found to be equal to each other (within 15% of the flow rate in the leg having lower flow).

(6) *System lockout during warm-up.* Functional operation of the gas sampling unit shall remain disabled through a system lockout until the instrument meets stability and warm-up requirements. The instrument shall be considered ''warmed up'' when the zero and span readings for HC, CO, and CO_2 have stabilized, within ±3% of the full range of low scale, for five minutes without adjustment.

(7) *Electromagnetic isolation and interference.* Electromagnetic signals found in an automotive service environment shall not cause malfunctions or changes in the accuracy in the electronics of the analyzer system. The instrument design shall ensure that readings do not vary as a result of electromagnetic radiation and induction devices normally found in the automotive service environment, including high energy vehicle ignition systems, radio frequency transmission radiation sources, and building electrical systems.

(8) *Vibration and shock protection.* System operation shall be unaffected by the vibration and shock encountered under the normal operating conditions encountered in an automotive service environment.

(9) *Propane equivalency factor.* The propane equivalency factor shall be displayed in a manner that enables it to be viewed conveniently, while permitting it to be altered only by personnel specifically authorized to do so.

(b) *Analyzers*—(1) *Accuracy.* The analyzers shall be of a design certified to meet the following accuracy requirements when calibrated to the span points specified in appendix A to this subpart:

Channel	Range	Accuracy	Noise	Repeatability
HC, ppm	0–400	±12	6	8
as hexane	401–1000	±30	10	15
	1001–2000	±80	20	30
CO, %	0–2.00	±0.06	0.02	0.03
	2.01–5.00	±0.15	0.06	0.08
	5.01–9.99	±0.40	0.10	0.15
CO_2, %	0–4.0	±0.6	0.2	0.3
	4.1–14.0	±0.5	0.2	0.3
NO, ppm	0–1000	±32	16	20
	1001–2000	±60	25	30
	2001–4000	±120	50	60

(2) *Minimum analyzer display resolution.* The analyzer electronics shall have sufficient resolution to achieve the following:

HC ..... 1ppm HC as hexane.
CO ..... 0.01% CO.
CO_2 ..... 0.1% CO_2.
NO ..... 1ppm NO.
RPM ..... 1rpm.

(3) *Response time.* The response time from the probe to the display for HC, CO, and CO_2 analyzers shall not exceed eight seconds to 90% of a step change in input. For NO analyzers, the response time shall not exceed twelve seconds to 90% of a step change in input.

(4) *Display refresh rate.* Dynamic information being displayed shall be refreshed at a minimum rate of twice per second.

(5) *Interference effects.* The interference effects for non-interest gases shall not exceed ±10 ppm for hydrocarbons, ±0.05 percent for carbon monoxide, ±0.20 percent for carbon dioxide, and ±20 ppm for oxides of nitrogen.

(6) *Low flow indication.* The analyzer shall provide an indication when the sample flow is below the acceptable level. The sampling system shall be equipped with a flow meter (or equivalent) that shall indicate sample flow degradation when meter error exceeds three percent of full scale, or causes system response time to exceed 13 seconds to 90 percent of a step change in input, whichever is less.

(7) *Engine speed detection.* The analyzer shall utilize a tachometer capable of detecting engine speed in revolutions per minute (rpm) with a 0.5 second response time and an accuracy of ±3% of the true rpm.

(8) *Test and mode timers.* The analyzer shall be capable of simultaneously determining the amount of time elapsed in a test, and in a mode within that test.

(9) *Sample rate.* The analyzer shall be capable of measuring exhaust concentrations of gases specified in this section at a minimum rate of twice per second.

(c) *Demonstration of conformity.* The analyzer shall be demonstrated to the satisfaction of the inspection program manager, through acceptance testing procedures, to meet the requirements of this section and that it is capable of being maintained as required in appendix A to this subpart.

(II) Steady-State Test Dynamometer

(a) The chassis dynamometer for steady-state short tests shall provide the following capabilities:

(1) *Power absorption.* The dynamometer shall be capable of applying a load to the vehicle's driving tire surfaces at the horsepower and speed levels specified in paragraph (II)(b) of this appendix.

(2) *Short-term stability.* Power absorption at constant speed shall not drift more than ±0.5 horsepower (hp) during any single test mode.

(3) *Roll weight capacity.* The dynamometer shall be capable of supporting a driving axle weight up to four thousand (4,000) pounds or greater.

(4) *Between roll wheel lifts.* These shall be controllable and capable of lifting a minimum of four thousand (4,000) pounds.

(5) *Roll brakes.* Both rolls shall be locked when the wheel lift is up.

(6) *Speed indications*. The dynamometer speed display shall have a range of 0–60 mph, and a resolution and accuracy of at least 1 mph.

(7) *Safety interlock*. A roll speed sensor and safety interlock circuit shall be provided which prevents the application of the roll brakes and upward lift movement at any roll speed above 0.5 mph.

(b) The dynamometer shall produce the load speed relationships specified in paragraphs (III) and (V) of appendix B to this subpart.

(III) Transient Emission Test Equipment [Reserved]

(IV) Evaporative System Purge Test Equipment [Reserved]

(V) Evaporative System Integrity Test Equipment [Reserved]

[57 FR 52987, Nov. 5, 1992, as amended at 58 FR 59367, Nov. 9, 1993]

APPENDIX E TO SUBPART S OF PART 51—TRANSIENT TEST DRIVING CYCLE

(I) *Driver's trace*. All excursions in the transient driving cycle shall be evaluated by the procedures defined in §86.115–78(b)(1) and §86.115(c) of this chapter. Excursions exceeding these limits shall cause a test to be void. In addition, provisions shall be available to utilize cycle validation criteria, as described in §86.1341–90 of this chapter, for trace speed versus actual speed as a means to determine a valid test.

(II) *Driving cycle*. The following table shows the time speed relationship for the transient IM240 test procedure.

Second	MPH
0	0
1	0
2	0
3	0
4	0
5	3
6	5.9
7	8.6
8	11.5
9	14.3
10	16.9
11	17.3
12	18.1
13	20.7
14	21.7
15	22.4
16	22.5
17	22.1
18	21.5
19	20.9
20	20.4
21	19.8
22	17
23	14.9
24	14.9
25	15.2
26	15.5
27	16
28	17.1
29	19.1
30	21.1
31	22.7
32	22.9
33	22.7
34	22.6
35	21.3
36	19
37	17.1
38	15.8
39	15.8
40	17.7
41	19.8
42	21.6
43	23.2
44	24.2
45	24.6
46	24.9
47	25
48	25.7
49	26.1
50	26.7
51	27.5
52	28.6
53	29.3
54	29.8
55	30.1
56	30.4
57	30.7
58	30.7
59	30.5
60	30.4
61	30.3
62	30.4
63	30.8
64	30.4
65	29.9
66	29.5
67	29.8
68	30.3
69	30.7
70	30.9
71	31
72	30.9
73	30.4
74	29.8
75	29.9
76	30.2
77	30.7
78	31.2
79	31.8
80	32.2
81	32.4
82	32.2
83	31.7
84	28.6
85	25.1
86	21.6
87	18.1
88	14.6
89	11.1
90	7.6
91	4.1
92	0.6
93	0
94	0
95	0
96	0
97	0
98	3.3
99	6.6

Second	MPH
100	9.9
101	13.2
102	16.5
103	19.8
104	22.2
105	24.3
106	25.8
107	26.4
108	25.7
109	25.1
110	24.7
111	25.2
112	25.4
113	27.2
114	26.5
115	24
116	22.7
117	19.4
118	17.7
119	17.2
120	18.1
121	18.6
122	20
123	20.7
124	21.7
125	22.4
126	22.5
127	22.1
128	21.5
129	20.9
130	20.4
131	19.8
132	17
133	17.1
134	15.8
135	15.8
136	17.7
137	19.8
138	21.6
139	22.2
140	24.5
141	24.7
142	24.8
143	24.7
144	24.6
145	24.6
146	25.1
147	25.6
148	25.7
149	25.4
150	24.9
151	25
152	25.4
153	26
154	26
155	25.7
156	26.1
157	26.7
158	27.3
159	30.5
160	33.5
161	36.2
162	37.3
163	39.3
164	40.5
165	42.1
166	43.5
167	45.1
168	46
169	46.8
170	47.5
171	47.5
172	47.3
173	47.2
174	47.2
175	47.4
176	47.9
177	48.5
178	49.1
179	49.5
180	50
181	50.6
182	51
183	51.5
184	52.2
185	53.2
186	54.1
187	54.6
188	54.9
189	55
190	54.9
191	54.6
192	54.6
193	54.8
194	55.1
195	55.5
196	55.7
197	56.1
198	56.3
199	56.6
200	56.7
201	56.7
202	56.3
203	56
204	55
205	53.4
206	51.6
207	51.8
208	52.1
209	52.5
210	53
211	53.5
212	54
213	54.9
214	55.4
215	55.6
216	56
217	56
218	55.8
219	55.2
220	54.5
221	53.6
222	52.5
223	51.5
224	50.5
225	48
226	44.5
227	41
228	37.5
229	34
230	30.5
231	27
232	23.5
233	20
234	16.5
235	13
236	9.5
237	6
238	2.5
239	0

[57 FR 52987, Nov. 5, 1992, as amended at 58 FR 59367, Nov. 9, 1993]

Subpart T—Conformity to State or Federal Implementation Plans of Transportation Plans, Programs, and Projects Developed, Funded or Approved Under Title 23 U.S.C. or the Federal Transit Laws

AUTHORITY: 42 U.S.C. 7401–7671q.

§ 51.390 Implementation plan revision.

(a) *Purpose and applicability*. The federal conformity rules under part 93, subpart A, of this chapter, in addition to any existing applicable state requirements, establish the conformity criteria and procedures necessary to meet the requirements of Clean Air Act section 176(c) until such time as EPA approves the conformity implementation plan revision required by this subpart. A state with an area subject to this subpart and part 93, subpart A, of this chapter must submit to EPA a revision to its implementation plan which contains criteria and procedures for DOT, MPOs and other state or local agencies to assess the conformity of transportation plans, programs, and projects, consistent with this subpart and part 93, subpart A, of this chapter. The federal conformity regulations contained in part 93, subpart A, of this chapter would continue to apply for the portion of the requirements that the state did not include in its conformity implementation plan and the portion, if any, of the state's conformity provisions that is not approved by EPA. In addition, any previously applicable implementation plan conformity requirements remain enforceable until the state submits a revision to its applicable implementation plan to specifically remove them and that revision is approved by EPA.

(b) *Conformity implementation plan content*. To satisfy the requirements of Clean Air Act section 176(c)(4)(E), the implementation plan revision required by this section must include the following three requirements of part 93, subpart A, of this chapter: §§ 93.105, 93.122(a)(4)(ii), and 93.125(c). A state may elect to include any other provisions of part 93, subpart A. If the provisions of the following sections of part 93, subpart A, of this chapter are included, such provisions must be included in verbatim form, except insofar as needed to clarify or to give effect to a stated intent in the revision to establish criteria and procedures more stringent than the requirements stated in this chapter: §§ 93.101, 93.102, 93.103, 93.104, 93.106, 93.109, 93.110, 93.111, 93.112, 93.113, 93.114, 93.115, 93.116, 93.117, 93.118, 93.119, 93.120, 93.121, 93.126, and 93.127. A state's conformity provisions may contain criteria and procedures more stringent than the requirements described in this subpart and part 93, subpart A, of this chapter only if the state's conformity provisions apply equally to non-federal as well as federal entities.

(c) *Timing and approval*. A state must submit this revision to EPA by November 25, 1994 or within 12 months of an area's redesignation from attainment to nonattainment, if the state has not previously submitted such a revision. The state must also revise its conformity implementation plan within 12 months of the date of publication of any final amendments to §§ 93.105, 93.122(a)(4)(ii), and 93.125(c), as appropriate. Any other portions of part 93, subpart A, of this chapter that the state has included in its conformity implementation plan and EPA has approved must be revised in the state's implementation plan and submitted to EPA within 12 months of the date of publication of any final amendments to such sections. EPA will provide DOT with a 30-day comment period before taking action to approve or disapprove the submission. In order for EPA to approve the implementation plan revision submitted to EPA under this subpart, the plan revision must address and give full legal effect to the following three requirements of part 93, subpart A: §§ 93.105, 93.122(a)(4)(ii), and 93.125(c). Any other provisions that are incorporated into the conformity implementation plan must also be done in a manner that gives them full legal effect. Following EPA approval of the state conformity provisions (or a portion thereof) in a revision to the state's conformity implementation plan, conformity determinations will be governed by the approved (or approved portion of the) state criteria and procedures as well as any applicable portions

of the federal conformity rules that are not addressed by the approved conformity SIP.

[73 FR 4438, Jan. 24, 2008]

Subpart U—Economic Incentive Programs

SOURCE: 59 FR 16710, Apr. 7, 1994, unless otherwise noted.

§ 51.490 Applicability.

(a) The rules in this subpart apply to any statutory economic incentive program (EIP) submitted to the EPA as an implementation plan revision to comply with sections 182(g)(3), 182(g)(5), 187(d)(3), or 187(g) of the Act. Such programs may be submitted by any authorized governmental organization, including States, local governments, and Indian governing bodies.

(b) The provisions contained in these rules, except as explicitly exempted, shall also serve as the EPA's policy guidance on discretionary EIP's submitted as implementation plan revisions for any purpose other than to comply with the statutory requirements specified in paragraph (a) of this section.

§ 51.491 Definitions.

Act means the Clean Air Act as amended November 15, 1990.

Actual emissions means the emissions of a pollutant from an affected source determined by taking into account actual emission rates associated with normal source operation and actual or representative production rates (*i.e.*, capacity utilization and hours of operation).

Affected source means any stationary, area, or mobile source of a criteria pollutant(s) to which an EIP applies. This term applies to sources explicitly included at the start of a program, as well as sources that voluntarily enter (*i.e.*, opt into) the program.

Allowable emissions means the emissions of a pollutant from an affected source determined by taking into account the most stringent of all applicable SIP emissions limits and the level of emissions consistent with source compliance with all Federal requirements related to attainment and maintenance of the NAAQS and the production rate associated with the maximum rated capacity and hours of operation (unless the source is subject to federally enforceable limits which restrict the operating rate, or hours of operation, or both).

Area sources means stationary and nonroad sources that are too small and/or too numerous to be individually included in a stationary source emissions inventory.

Attainment area means any area of the country designated or redesignated by the EPA at 40 CFR part 81 in accordance with section 107(d) as having attained the relevant NAAQS for a given criteria pollutant. An area can be an attainment area for some pollutants and a nonattainment area for other pollutants.

Attainment demonstration means the requirement in section 182(b)(1)(A) of the Act to demonstrate that the specific annual emissions reductions included in a SIP are sufficient to attain the primary NAAQS by the date applicable to the area.

Directionally-sound strategies are strategies for which adequate procedures to quantify emissions reductions or specify a program baseline are not defined as part of the EIP.

Discretionary economic incentive program means any EIP submitted to the EPA as an implementation plan revision for purposes other than to comply with the statutory requirements of sections 182(g)(3), 182(g)(5), 187(d)(3), or 187(g) of the Act.

Economic incentive program (EIP) means a program which may include State established emission fees or a system of marketable permits, or a system of State fees on sale or manufacture of products the use of which contributes to O_3 formation, or any combination of the foregoing or other similar measures, as well as incentives and requirements to reduce vehicle emissions and vehicle miles traveled in the area, including any of the transportation control measures identified in section 108(f). Such programs may be directed toward stationary, area, and/or mobile sources, to achieve emissions reductions milestones, to attain and maintain ambient air quality standards, and/or to provide more flexible,

lower-cost approaches to meeting environmental goals. Such programs are categorized into the following three categories: Emission-limiting, market-response, and directionally-sound strategies.

Emission-limiting strategies are strategies that directly specify limits on total mass emissions, emission-related parameters (e.g., emission rates per unit of production, product content limits), or levels of emissions reductions relative to a program baseline that are required to be met by affected sources, while providing flexibility to sources to reduce the cost of meeting program requirements.

Indian governing body means the governing body of any tribe, band, or group of Indians subject to the jurisdiction of the U.S. and recognized by the U.S. as possessing power of self-government.

Maintenance plan means an implementation plan for an area for which the State is currently seeking designation or has previously sought redesignation to attainment, under section 107(d) of the Act, which provides for the continued attainment of the NAAQS.

Market-response strategies are strategies that create one or more incentives for affected sources to reduce emissions, without directly specifying limits on emissions or emission-related parameters that individual sources or even all sources in the aggregate are required to meet.

Milestones means the reductions in emissions required to be achieved pursuant to section 182(b)(1) and the corresponding requirements in section 182(c)(2) (B) and (C), 182(d), and 182(e) of the Act for O_3 nonattainment areas, as well as the reduction in emissions of CO equivalent to the total of the specified annual emissions reductions required by December 31, 1995, pursuant to section 187(d)(1).

Mobile sources means on-road (highway) vehicles (e.g., automobiles, trucks and motorcycles) and nonroad vehicles (e.g., trains, airplanes, agricultural equipment, industrial equipment, construction vehicles, off-road motorcycles, and marine vessels).

National ambient air quality standard (NAAQS) means a standard set by the EPA at 40 CFR part 50 under section 109 of the Act.

Nonattainment area means any area of the country designated by the EPA at 40 CFR part 81 in accordance with section 107(d) of the Act as nonattainment for one or more criteria pollutants. An area could be a nonattainment area for some pollutants and an attainment area for other pollutants.

Nondiscriminatory means that a program in one State does not result in discriminatory effects on other States or sources outside the State with regard to interstate commerce.

Program baseline means the level of emissions, or emission-related parameter(s), for each affected source or group of affected sources, from which program results (e.g., quantifiable emissions reductions) shall be determined.

Program uncertainty factor means a factor applied to discount the amount of emissions reductions credited in an implementation plan demonstration to account for any strategy-specific uncertainties in an EIP.

Reasonable further progress (RFP) plan means any incremental emissions reductions required by the CAA (e.g., section 182(b)) and approved by the EPA as meeting these requirements.

Replicable refers to methods which are sufficiently unambiguous such that the same or equivalent results would be obtained by the application of the methods by different users.

RFP baseline means the total of actual volatile organic compounds or nitrogen oxides emissions from all anthropogenic sources in an O_3 nonattainment area during the calendar year 1990 (net of growth and adjusted pursuant to section 182(b)(1)(B) of the Act), expressed as typical O_3 season, weekday emissions.

Rule compliance factor means a factor applied to discount the amount of emissions reductions credited in an implementation plan demonstration to account for less-than-complete compliance by the affected sources in an EIP.

Shortfall means the difference between the amount of emissions reductions credited in an implementation plan for a particular EIP and those that are actually achieved by that EIP,

as determined through an approved reconciliation process.

State means State, local government, or Indian-governing body.

State implementation plan (SIP) means a plan developed by an authorized governing body, including States, local governments, and Indian-governing bodies, in a nonattainment area, as required under titles I & II of the Clean Air Act, and approved by the EPA as meeting these same requirements.

Stationary source means any building, structure, facility or installation, other than an area or mobile source, which emits or may emit any criteria air pollutant or precursor subject to regulation under the Act.

Statutory economic incentive program means any EIP submitted to the EPA as an implementation plan revision to comply with sections 182(g)(3), 182(g)(5), 187(d)(3), or 187(g) of the Act.

Surplus means, at a minimum, emissions reductions in excess of an established program baseline which are not required by SIP requirements or State regulations, relied upon in any applicable attainment plan or demonstration, or credited in any RFP or milestone demonstration, so as to prevent the double-counting of emissions reductions.

Transportation control measure (TCM) is any measure of the types listed in section 108(F) of the Act, or any measure in an applicable implementation plan directed toward reducing emissions of air pollutants from transportation sources by a reduction in vehicle use or changes in traffic conditions.

§ 51.492 State program election and submittal.

(a) *Extreme O_3 nonattainment areas.* (1) A State or authorized governing body for any extreme O_3 nonattainment area shall submit a plan revision to implement an EIP, in accordance with the requirements of this part, pursuant to section 182(g)(5) of the Act, if:

(i) A required milestone compliance demonstration is not submitted within the required period.

(ii) The Administrator determines that the area has not met any applicable milestone.

(2) The plan revision in paragraph (a)(1) of this section shall be submitted within 9 months after such failure or determination, and shall be sufficient, in combination with other elements of the SIP, to achieve the next milestone.

(b) *Serious CO nonattainment areas.* (1) A State or authorized governing body for any serious CO nonattainment area shall submit a plan revision to implement an EIP, in accordance with the requirements of this part, if:

(i) A milestone demonstration is not submitted within the required period, pursuant to section 187(d) of the Act.

(ii) The Administrator notifies the State, pursuant to section 187(d) of the Act, that a milestone has not been met.

(iii) The Administrator determines, pursuant to section 186(b)(2) of the Act that the NAAQS for CO has not been attained by the applicable date for that area. Such revision shall be submitted within 9 months after such failure or determination.

(2) Submittals made pursuant to paragraphs (b)(1) (i) and (ii) of this section shall be sufficient, together with a transportation control program, to achieve the specific annual reductions in CO emissions set forth in the implementation plan by the attainment date. Submittals made pursuant to paragraph (b)(1)(iii) of this section shall be adequate, in combination with other elements of the revised plan, to reduce the total tonnage of emissions of CO in the area by at least 5 percent per year in each year after approval of the plan revision and before attainment of the NAAQS for CO.

(c) *Serious and severe O_3 nonattainment areas.* If a State, for any serious or severe O_3 nonattainment area, elects to implement an EIP in the circumstances set out in section 182(g)(3) of the Act, the State shall submit a plan revision to implement the program in accordance with the requirements of this part. If the option to implement an EIP is elected, a plan revision shall be submitted within 12 months after the date required for election, and shall be sufficient, in combination with other elements of the SIP, to achieve the next milestone.

(d) *Any nonattainment or attainment area.* Any State may at any time submit a plan or plan revision to implement a discretionary EIP, in accordance with the requirements of this part, pursuant to sections 110(a)(2)(A) and 172(c)(6) and other applicable provisions of the Act concerning SIP submittals. The plan revision shall not interfere with any applicable requirement concerning attainment and RFP, or any other applicable requirements of the Act.

§ 51.493 State program requirements.

Economic incentive programs shall be State and federally enforceable, nondiscriminatory, and consistent with the timely attainment of NAAQS, all applicable RFP and visibility requirements, applicable PSD increments, and all other applicable requirements of the Act. Programs in nonattainment areas for which credit is taken in attainment and RFP demonstrations shall be designed to ensure that the effects of the program are quantifiable and permanent over the entire duration of the program, and that the credit taken is limited to that which is surplus. Statutory programs shall be designed to result in quantifiable, significant reductions in actual emissions. The EIP's shall include the following elements, as applicable:

(a) *Statement of goals and rationale.* This element shall include a clear statement as to the environmental problem being addressed, the intended environmental and economic goals of the program, and the rationale relating the incentive-based strategy to the program goals.

(1) The statement of goals must include the goal that the program will benefit both the environment and the regulated entities. The program shall be designed so as to meaningfully meet this goal either directly, through increased or more rapid emissions reductions beyond those that would be achieved through a traditional regulatory program, or, alternatively, through other approaches that will result in real environmental benefits. Such alternative approaches include, but are not limited to, improved administrative mechanisms, reduced administrative burdens on regulatory agencies, improved emissions inventories, and the adoption of emission caps which over time constrain or reduce growth-related emissions beyond traditional regulatory approaches.

(2) The incentive-based strategy shall be described in terms of one of the following three strategies:

(i) Emission-limiting strategies, which directly specify limits on total mass emissions, emission-related parameters (e.g., emission rates per unit of production, product content limits), or levels of emissions reductions relative to a program baseline that affected sources are required to meet, while providing flexibility to sources to reduce the cost of meeting program requirements.

(ii) Market-response strategies, which create one or more incentives for affected sources to reduce emissions, without directly specifying limits on emissions or emission-related parameters that individual sources or even all sources in the aggregate are required to meet.

(iii) Directionally-sound strategies, for which adequate procedures to quantify emissions reductions are not defined.

(b) *Program scope.* (1) This element shall contain a clear definition of the sources affected by the program. This definition shall address:

(i) The extent to which the program is mandatory or voluntary for the affected sources.

(ii) Provisions, if any, by which sources that are not required to be in the program may voluntarily enter the program.

(iii) Provisions, if any, by which sources covered by the program may voluntarily leave the program.

(2) Any opt-in or opt-out provisions in paragraph (b)(1) of this section shall be designed to provide mechanisms by which such program changes are reflected in an area's attainment and RFP demonstrations, thus ensuring that there will not be an increase in the emissions inventory for the area caused by voluntary entry or exit from the program.

(3) The program scope shall be defined so as not to interfere with any other Federal requirements which apply to the affected sources.

(c) *Program baseline.* A program baseline shall be defined as a basis for projecting program results and, if applicable, for initializing the incentive mechanism (e.g., for marketable permits programs). The program baseline shall be consistent with, and adequately reflected in, the assumptions and inputs used to develop an area's RFP plans and attainment and maintenance demonstrations, as applicable. The State shall provide sufficient supporting information from the areawide emissions inventory and other sources to justify the baseline used in the EIP.

(1) For EIP's submitted in conjunction with, or subsequent to, the submission of any areawide progress plan due at the time of EIP submission (e.g., the 15 percent RFP plan and/or subsequent 3 percent plans) or an attainment demonstration, a State may exercise flexibility in setting a program baseline provided the program baseline is consistent with and reflected in all relevant progress plans or attainment demonstration. A flexible program baseline may be based on the lower of actual, allowable, or some other intermediate or lower level of emissions. For any EIP submitted prior to the submittal of an attainment demonstration, the State shall include the following with its EIP submittal:

(i) A commitment that its subsequent attainment demonstration and all future progress plans, if applicable, will be consistent with the EIP baseline.

(ii) A discussion of how the baseline will be integrated into the subsequent attainment demonstration, taking into account the potential that credit issued prior to the attainment demonstration may no longer be surplus relative to the attainment demonstration.

(2) Except as provided for in paragraph (c)(4) of this section, for EIP's submitted during a time period when any progress plans are required but not yet submitted (e.g., the 15 percent RFP plan and/or the subsequent 3 percent plans), the program baseline shall be based on the lower-of-actual-or-allowable emissions. In such cases, actual emissions shall be taken from the most appropriate inventory, such as the 1990 actual emission inventory (due for submission in November 1992), and allowable emissions are the lower of SIP-allowable emissions or the level of emissions consistent with source compliance with all Federal requirements related to attainment and maintenance of the NAAQS.

(3) For EIP's that are designed to implement new and/or previously existing RACT requirements through emissions trading and are submitted in conjunction with, or subsequent to, the submission of an associated RACT rule, a State may exercise flexibility in setting a program baseline provided the program baseline is consistent with and reflected in the associated RACT rule, and any applicable progress plans and attainment demonstrations.

(4) For EIP's that are designed to implement new and/or previously existing RACT requirements through emissions trading and are submitted prior to the submission of a required RFP plan or attainment demonstration, States also have flexibility in determining the program baseline, provided the following conditions are met.

(i) For EIP's that implement new RACT requirements for previously unregulated source categories through emissions trading, the new RACT requirements must reflect, to the extent practicable, increased emissions reductions beyond those that would be achieved through a traditional RACT program.

(ii) For EIP's that impose new RACT requirements on previously unregulated sources in a previously regulated source category (e.g., RACT ''catch-up'' programs), the new incentive-based RACT rule shall, in the aggregate, yield reductions in actual emissions at least equivalent to that which would result from source-by-source compliance with the existing RACT limit for that source category.

(5) A program baseline for individual sources shall, as appropriate, be contained or incorporated by reference in federally-enforceable operating permits or a federally-enforceable SIP.

(6) An initial baseline for TCM's shall be calculated by establishing the preexisting conditions in the areas of interest. This may include establishing to what extent TCM's have already

been implemented, what average vehicle occupancy (AVO) levels have been achieved during peak and off-peak periods, what types of trips occur in the region, and what mode choices have been made in making these trips. In addition, the extent to which travel options are currently available within the region of interest shall be determined. These travel options may include, but are not limited to, the degree of dispersion of transit services, the current ridership rates, and the availability and usage of parking facilities.

(7) Information used in setting a program baseline shall be of sufficient quality to provide for at least as high a degree of accountability as currently exists for traditional control requirements for the categories of sources affected by the program.

(d) *Replicable emission quantification methods*. This program element, for programs other than those which are categorized as directionally-sound, shall include credible, workable, and replicable methods for projecting program results from affected sources and, where necessary, for quantifying emissions from individual sources subject to the EIP. Such methods, if used to determine credit taken in attainment, RFP, and maintenance demonstrations, as applicable, shall yield results which can be shown to have a level of certainty comparable to that for source-specific standards and traditional methods of control strategy development. Such methods include, as applicable, the following elements:

(1) Specification of quantification methods. This element shall specify the approach or the combination or range of approaches that are acceptable for each source category affected by the program. Acceptable approaches may include, but are not limited to:

(i) Test methods for the direct measurement of emissions, either continuously or periodically.

(ii) Calculation equations which are a function of process or control system parameters, ambient conditions, activity levels, and/or throughput or production rates.

(iii) Mass balance calculations which are a function of inventory, usage, and/or disposal records.

(iv) EPA-approved emission factors, where appropriate and adequate.

(v) Any combination of these approaches.

(2) Specification of averaging times.

(i) The averaging time for any specified mass emissions caps or emission rate limits shall be consistent with: attaining and maintaining all applicable NAAQS, meeting RFP requirements, and ensuring equivalency with all applicable RACT requirements.

(ii) If the averaging time for any specified VOC or NO_X mass emissions caps or emission rate limits for stationary sources (and for other sources, as appropriate) is longer than 24 hours, the State shall provide, in support of the SIP submittal, a statistical showing that the specified averaging time is consistent with attaining the O_3 NAAQS and satisfying RFP requirements, as applicable, on the basis of typical summer day emissions; and, if applicable, a statistical showing that the longer averaging time will produce emissions reductions that are equivalent on a daily basis to source-specific RACT requirements.

(3) Accounting for shutdowns and production curtailments. This accounting shall include provisions which ensure that:

(i) Emissions reductions associated with shutdowns and production curtailments are not double-counted in attainment or RFP demonstrations.

(ii) Any resultant ''shifting demand'' which increases emissions from other sources is accounted for in such demonstrations.

(4) Accounting for batch, seasonal, and cyclical operations. This accounting shall include provisions which ensure that the approaches used to account for such variable operations are consistent with attainment and RFP plans.

(5) Accounting for travel mode choice options, as appropriate, for TCM's. This accounting shall consider the factors or attributes of the different forms of travel modes (e.g., bus, ridesharing) which determine which type of travel an individual will choose. Such factors include, but are not limited to, time, cost, reliability, and convenience of the mode.

(e) *Source requirements.* This program element shall include all source-specific requirements that constitute compliance with the program. Such requirements shall be appropriate, readily ascertainable, and State and federally enforceable, including, as applicable:

(1) Emission limits.

(i) For programs that impose limits on total mass emissions, emission rates, or other emission-related parameter(s), there must be an appropriate tracking system so that a facility's limits are readily ascertainable at all times.

(ii) For emission-limiting EIP's that authorize RACT sources to meet their RACT requirements through RACT/non-RACT trading, such trading shall result in an exceptional environmental benefit. Demonstration of an exceptional environmental benefit shall require either the use of the statutory offset ratios for nonattainment areas as the determinant of the amount of emissions reductions that would be required from non-RACT sources generating credits for RACT sources or, alternatively, a trading ratio of 1.1 to 1, at a minimum, may be authorized, provided exceptional environmental benefits are otherwise demonstrated.

(2) Monitoring, recordkeeping, and reporting requirements.

(i) An EIP (or the SIP as a whole) must contain test methods and, where necessary, emission quantification methodologies, appropriate to the emission limits established in the SIP. EIP sources must be subject to clearly specified MRR requirements appropriate to the test methods and any applicable quantification methodologies, and consistent with the EPA's title V rules, where applicable. Such MRR requirements shall provide sufficiently reliable and timely information to determine compliance with emission limits and other applicable strategy-specific requirements, and to provide for State and Federal enforceability of such limits and requirements. Methods for MRR may include, but are not limited to:

(A) The continuous monitoring of mass emissions, emission rates, or process or control parameters.

(B) In situ or portable measurement devices to verify control system operating conditions.

(C) Periodic measurement of mass emissions or emission rates using reference test methods.

(D) Operation and maintenance procedures and/or other work practices designed to prevent, identify, or remedy noncomplying conditions.

(E) Manual or automated recordkeeping of material usage, inventories, throughput, production, or levels of required activities.

(F) Any combination of these methods. EIP's shall require that responsible parties at each facility in the EIP program certify reported information.

(ii) Procedures for determining required data, including the emissions contribution from affected sources, for periods for which required data monitoring is not performed, data are otherwise missing, or data have been demonstrated to have been inaccurately determined.

(3) Any other applicable strategy-specific requirements.

(f) *Projected results and audit/reconciliation procedures.* (1) The SIP submittal shall include projections of the emissions reductions associated with the implementation of the program. These projected results shall be related to and consistent with the assumptions used to develop the area's attainment demonstration and maintenance plan, as applicable. For programs designed to produce emissions reductions creditable towards RFP milestones, projected emissions reductions shall be related to the RFP baseline and consistent with the area's RFP compliance demonstration. The State shall provide sufficient supporting information that shows how affected sources are or will be addressed in the emissions inventory, RFP plan, and attainment demonstration or maintenance plan, as applicable.

(i) For emission-limiting programs, the projected results shall be consistent with the reductions in mass emissions or emissions-related parameters specified in the program design.

(ii) For market-response programs, the projected results shall be based on

market analyses relating levels of targeted emissions and/or emission-related activities to program design parameters.

(iii) For directionally-sound programs, the projected results may be descriptive and shall be consistent with the area's attainment demonstration or maintenance plan.

(2) Quantitative projected results shall be adjusted through the use of two uncertainty factors, as appropriate, to reflect uncertainties inherent in both the extent to which sources will comply with program requirements and the overall program design.

(i) Uncertainty resulting from incomplete compliance shall be addressed through the use of a rule compliance factor.

(ii) Programmatic uncertainty shall be addressed through the use of a program uncertainty factor. Any presumptive norms set by the EPA shall be used unless an adequate justification for an alternative factor is included in supporting information to be supplied with the SIP submittal. In the absence of any EPA-specified presumptive norms, the State shall provide an adequate justification for the selected factors as part of the supporting information to be supplied with the SIP submittal.

(3) Unless otherwise provided in program-specific guidance issued by the EPA, EIP's for which SIP credit is taken shall include audit procedures to evaluate program implementation and track program results in terms of both actual emissions reductions, and, to the extent practicable, cost savings relative to traditional regulatory program requirements realized during program implementation. Such audits shall be conducted at specified time intervals, not to exceed three years. The State shall provide timely post-audit reports to the EPA.

(i) For emission-limiting EIP's, the State shall commit to ensure the timely implementation of programmatic revisions or other measures which the State, in response to the audit, deems necessary for the successful operation of the program in the context of overall RFP and attainment requirements.

(ii) For market-response EIP's, reconciliation procedures that identify a range of appropriate actions or revisions to program requirements that will make up for any shortfall between credited results (*i.e.*, projected results, as adjusted by the two uncertainty factors described above) and actual results obtained during program implementation shall be submitted together with the program audit provisions. Such measures must be federally enforceable, as appropriate, and automatically executing to the extent necessary to make up the shortfall within a specified period of time, consistent with relevant RFP and attainment requirements.

(g) *Implementation schedule.* The program shall contain a schedule for the adoption and implementation of all State commitments and source requirements included in the program design.

(h) *Administrative procedures.* The program shall contain a description of State commitments which are integral to the implementation of the program, and the administrative system to be used to implement the program, addressing the adequacy of the personnel, funding, and legislative authority.

(1) States shall furnish adequate documentation of existing legal authority and demonstrated administrative capacity to implement and enforce the provisions of the EIP.

(2) For programs which require private and/or public entities to establish emission-related economic incentives (e.g., programs requiring employers to exempt carpoolers/multiple occupancy vehicles from paying for parking), States shall furnish adequate documentation of State authority and administrative capacity to implement and enforce the underlying program.

(i) *Enforcement mechanisms.* The program shall contain a compliance instrument(s) for all program requirements, which is legally binding and State and federally enforceable. This program element shall also include a State enforcement program which defines violations, and specifies auditing and inspections plans and provisions for enforcement actions. The program shall contain effective penalties for noncompliance which preserve the

level of deterrence in traditional programs. For all such programs, the manner of collection of penalties must be specified.

(1) Emission limit violations. (i) Programs imposing limits on mass emissions or emission rates that provide for extended averaging times and/or compliance on a multisource basis shall include procedures for determining the number of violations, the number of days of violation, and sources in violation, for statutory maximum penalty purposes, when the limits are exceeded. The State shall demonstrate that such procedures shall not lessen the incentive for source compliance as compared to a program applied on a source-by-source, daily basis.

(ii) Programs shall require plans for remedying noncompliance at any facility that exceeds a multisource emissions limit for a given averaging period. These plans shall be enforceable both federally and by the State.

(2) Violations of MRR requirements. The MRR requirements shall apply on a daily basis, as appropriate, and violations thereof shall be subject to State enforcement sanctions and to the Federal penalty of up to $25,000 for each day a violation occurs or continues. In addition, where the requisite scienter conditions are met, violations of such requirements shall be subject to the Act's criminal penalty sanctions of section 113(c)(2), which provides for fines and imprisonment of up to 2 years.

§ 51.494 Use of program revenues.

Any revenues generated from statutory EIP's shall be used by the State for any of the following:

(a) Providing incentives for achieving emissions reductions.

(b) Providing assistance for the development of innovative technologies for the control of O_3 air pollution and for the development of lower-polluting solvents and surface coatings. Such assistance shall not provide for the payment of more than 75 percent of either the costs of any project to develop such a technology or the costs of development of a lower-polluting solvent or surface coating.

(c) Funding the administrative costs of State programs under this Act. Not more than 50 percent of such revenues may be used for this purpose. The use of any revenues generated from discretionary EIP's shall not be constrained by the provisions of this part.

Subpart W—Determining Conformity of General Federal Actions to State or Federal Implementation Plans

SOURCE: 58 FR 63247, Nov. 30, 1993, unless otherwise noted.

§ 51.850 [Reserved]

§ 51.851 State implementation plan (SIP) or Tribal implementation plan (TIP) revision.

(a) A State or eligible Tribe (a federally recognized tribal government determined to be eligible to submit a TIP under 40 CFR 49.6) may submit to the Environmental Protection Agency (EPA) a revision to its applicable implementation plan which contains criteria and procedures for assessing the conformity of Federal actions to the applicable implementation plan, consistent with this section and 40 CFR part 93, subpart B.

(b) Until EPA approves the conformity implementation plan revision permitted by this section, Federal agencies shall use the provisions of 40 CFR part 93, subpart B in addition to any existing applicable State or tribal requirements, to demonstrate conformity with the applicable SIP or TIP as required by section 176(c) of the CAA (42 U.S.C. 7506).

(c) Following EPA approval of the State or tribal conformity provisions (or a portion thereof) in a revision to the applicable SIP or TIP, conformity determinations shall be governed by the approved (or approved portion of) State or tribal criteria and procedures. The Federal conformity regulations contained in 40 CFR part 93, subpart B would apply only for the portion, if any, of the part 93 requirements not contained in the State or Tribe conformity provisions approved by EPA.

(d) The State or tribal conformity implementation plan criteria and procedures cannot be any less stringent than the requirements in 40 CFR part 93, subpart B.

(e) A State's or Tribe's conformity provisions may contain criteria and procedures more stringent than the requirements described in this subpart and part 93, subpart B, only if the State's or Tribe's conformity provisions apply equally to non-Federal as well as Federal entities.

(f) In its SIP or TIP, the State or Tribe may identify a list of Federal actions or type of emissions that it presumes will conform. The State or Tribe may place whatever limitations on that list that it deems necessary. The State or Tribe must demonstrate that the action will not interfere with timely attainment or maintenance of the standard, meeting the reasonable further progress milestones or other requirements of the Clean Air Act. Federal agencies can rely on the list to determine that their emissions conform with the applicable SIP or TIP.

(g) Any previously applicable SIP or TIP requirements relating to conformity remain enforceable until EPA approves the revision to the SIP or TIP to specifically remove them.

[75 FR 17272, Apr. 5, 2010]

§§ 51.852–51.860 [Reserved]

Subpart X—Provisions for Implementation of 8-hour Ozone National Ambient Air Quality Standard

SOURCE: 69 FR 23996, Apr. 30, 2004, unless otherwise noted.

§ 51.900 Definitions.

The following definitions apply for purposes of this subpart. Any term not defined herein shall have the meaning as defined in 40 CFR 51.100.

(a) *1-hour NAAQS* means the 1-hour ozone national ambient air quality standards codified at 40 CFR 50.9.

(b) *8-hour NAAQS* means the 8-hour ozone national ambient air quality standards codified at 40 CFR 50.10.

(c) *1-hour ozone design value* is the 1-hour ozone concentration calculated according to 40 CFR part 50, Appendix H and the interpretation methodology issued by the Administrator most recently before the date of the enactment of the CAA Amendments of 1990.

(d) *8-Hour ozone design value* is the 8-hour ozone concentration calculated according to 40 CFR part 50, appendix I.

(e) *CAA* means the Clean Air Act as codified at 42 U.S.C. 7401–7671q (2003).

(f) Applicable requirements means for an area the following requirements to the extent such requirements apply or applied to the area for the area's classification under section 181(a)(1) of the CAA for the 1-hour NAAQS at designation for the 8-hour NAAQS:

(1) Reasonably available control technology (RACT).

(2) Inspection and maintenance programs (I/M).

(3) Major source applicability cut-offs for purposes of RACT.

(4) Rate of Progress (ROP) reductions.

(5) Stage II vapor recovery.

(6) Clean fuels fleet program under section 183(c)(4) of the CAA.

(7) Clean fuels for boilers under section 182(e)(3) of the CAA.

(8) Transportation Control Measures (TCMs) during heavy traffic hours as provided under section 182(e)(4) of the CAA.

(9) Enhanced (ambient) monitoring under section 182(c)(1) of the CAA.

(10) Transportation controls under section 182(c)(5) of the CAA.

(11) Vehicle miles traveled provisions of section 182(d)(1) of the CAA.

(12) NO_X requirements under section 182(f) of the CAA.

(13) Attainment demonstration or an alternative as provided under § 51.905(a)(1)(ii).

(14) Contingency measures required under CAA sections 172(c)(9) and 182(c)(9) that would be triggered based on a failure to attain the 1-hour NAAQS by the applicable attainment date or to make reasonable further progress toward attainment of the 1-hour NAAQS.

(g) *Attainment year ozone season* shall mean the ozone season immediately preceding a nonattainment area's attainment date.

(h) *Designation for the 8-hour NAAQS* shall mean the effective date of the 8-hour designation for an area.

(i) *Higher classification/lower classification.* For purposes of determining whether a classification is higher or lower, classifications are ranked from

lowest to highest as follows: classification under subpart 1 of the CAA; marginal; moderate; serious; severe-15; severe-17; and extreme.

(j) *Initially designated* means the first designation that becomes effective for an area for the 8-hour NAAQS and does not include a redesignation to attainment or nonattainment for that standard.

(k) *Maintenance area for the 1-hour NAAQS* means an area that was designated nonattainment for the 1-hour NAAQS on or after November 15, 1990 and was redesignated to attainment for the 1-hour NAAQS subject to a maintenance plan as required by section 175A of the CAA.

(l) *Nitrogen Oxides (NO_X)* means the sum of nitric oxide and nitrogen dioxide in the flue gas or emission point, collectively expressed as nitrogen dioxide.

(m) *NO_X SIP Call* means the rules codified at 40 CFR 51.121 and 51.122.

(n) *Ozone season* means for each State, the ozone monitoring season as defined in 40 CFR Part 58, Appendix D, section 2.5 for that State.

(o) *Ozone transport region* means the area established by section 184(a) of the CAA or any other area established by the Administrator pursuant to section 176A of the CAA for purposes of ozone.

(p) *Reasonable further progress (RFP)* means for the purposes of the 8-hour NAAQS, the progress reductions required under section 172(c)(2) and section 182(b)(1) and (c)(2)(B) and (c)(2)(C) of the CAA.

(q) *Rate of progress (ROP)* means for purposes of the 1-hour NAAQS, the progress reductions required under section 172(c)(2) and section 182(b)(1) and (c)(2)(B) and (c)(2)(C) of the CAA.

(r) *Revocation of the 1-hour NAAQS* means the time at which the 1-hour NAAQS no longer apply to an area pursuant to 40 CFR 50.9(b).

(s) *Subpart 1* (CAA) means subpart 1 of part D of title I of the CAA.

(t) *Subpart 2* (CAA) means subpart 2 of part D of title I of the CAA.

(u) *Attainment Area* means, unless otherwise indicated, an area designated as either attainment, unclassifiable, or attainment/unclassifiable.

[69 FR 23996, Apr. 30, 2004, as amended at 70 FR 30604, May 26, 2005; 77 FR 28441, May 14, 2012]

§ 51.901 Applicability of part 51.

The provisions in subparts A through W of part 51 apply to areas for purposes of the 8-hour NAAQS to the extent they are not inconsistent with the provisions of this subpart.

§ 51.902 Which classification and nonattainment area planning provisions of the CAA shall apply to areas designated nonattainment for the 1997 8-hour NAAQS?

(a) An area designated nonattainment for the 1997 8-hour NAAQS will be classified in accordance with section 181 of the CAA, as interpreted in § 51.903(a), for purposes of the 1997 8-hour NAAQS, and will be subject to the requirements of subpart 2 that apply for that classification.

(b) [Reserved]

[77 FR 28841, May 14, 2012]

§ 51.903 How do the classification and attainment date provisions in section 181 of subpart 2 of the CAA apply to areas subject to § 51.902(a)?

(a) In accordance with section 181(a)(1) of the CAA, each area subject to § 51.902(a) shall be classified by operation of law at the time of designation. However, the classification shall be based on the 8-hour design value for the area, in accordance with Table 1 below, or such higher or lower classification as the State may request as provided in paragraphs (b) and (c) of this section. The 8-hour design value for the area shall be calculated using the three most recent years of air quality data. For each area classified under this section, the primary NAAQS attainment date for the 8-hour NAAQS shall be as expeditious as practicable but not later than the date provided in the following Table 1.

TABLE 1—CLASSIFICATION FOR 8-HOUR OZONE NAAQS FOR AREAS SUBJECT TO § 51.902(a)

Area class		8-hour design value (ppm ozone)	Maximum period for attainment dates in state plans (years after effective date of nonattainment designation for 8-hour NAAQS)
Marginal	from	0.085	3
	up to [1]	0.092	
Moderate	from	0.092	6
	up to [1]	0.107	
Serious	from	0.107	9
	up to [1]	0.120	
Severe-15	from	0.120	15
	up to [1]	0.127	
Severe-17	from	0.127	17
	up to [1]	0.187	
Extreme	equal to or above	0.187	20

[1] but not including.

(b) A State may request a higher classification for any reason in accordance with section 181(b)(3) of the CAA.

(c) A State may request a lower classification in accordance with section 181(a)(4) of the CAA.

§ 51.904 How do the classification and attainment date provisions in section 172(a) of subpart 1 of the CAA apply to areas subject to § 51.902(b)?

(a) *Classification.* The Administrator may classify an area subject to § 51.902(b) as an overwhelming transport area if:

(1) The area meets the criteria as specified for rural transport areas under section 182(h) of the CAA;

(2) Transport of ozone and/or precursors into the area is so overwhelming that the contribution of local emissions to observed 8-hour ozone concentration above the level of the NAAQS is relatively minor; and

(3) The Administrator finds that sources of VOC (and, where the Administrator determines relevant, NO_X) emissions within the area do not make a significant contribution to the ozone concentrations measured in other areas.

(b) *Attainment dates.* For an area subject to § 51.902(b), the Administrator will approve an attainment date consistent with the attainment date timing provision of section 172(a)(2)(A) of the CAA at the time the Administrator approves an attainment demonstration for the area.

§ 51.905 How do areas transition from the 1-hour NAAQS to the 1997 8-hour NAAQS and what are the anti-backsliding provisions?

(a) *What requirements that applied in an area for the 1-hour NAAQS continue to apply after revocation of the 1-hour NAAQS for that area?*—(1) *8-Hour NAAQS Nonattainment/1-Hour NAAQS Nonattainment.* The following requirements apply to an area designated nonattainment for the 8-hour NAAQS and designated nonattainment for the 1-hour NAAQS at the time of designation for the 8-hour NAAQS for that area.

(i) The area remains subject to the obligation to adopt and implement the applicable requirements as defined in § 51.900(f), except as provided in paragraph (a)(1)(iii) of this section, and except as provided in paragraph (b) of this section.

(ii) If the area has not met its obligation to have a fully-approved attainment demonstration SIP for the 1-hour NAAQS, the State must comply with one of the following:

(A) Submit a 1-hour attainment demonstration no later than 1 year after designation;

(B) Submit a RFP plan for the 8-hour NAAQS no later than 1-year following designations for the 8-hour NAAQS providing a 5 percent increment of emissions reduction from the area's 2002 emissions baseline, which must be in addition to measures (or enforceable commitments to measures) in the SIP at the time of the effective date of designation and in addition to national or

regional measures and must be achieved no later than 2 years after the required date for submission (3 years after designation).

(C) Submit an 8-hour ozone attainment demonstration no later than 1 year following designations that demonstrates attainment of the 8-hour NAAQS by the area's attainment date; provides for 8-hour RFP for the area out to the attainment date; and for the initial period of RFP for the area (between 2003–2008), achieve the emission reductions by December 31, 2007.

(iii) If the area has an outstanding obligation for an approved 1-hour ROP SIP, it must develop and submit to EPA all outstanding 1-hour ROP plans; where a 1-hour obligation overlaps with an 8-hour RFP requirement, the State's 8-hour RFP plan can be used to satisfy the 1-hour ROP obligation if the 8-hour RFP plan has an emission target at least as stringent as the 1-hour ROP emission target in each of the 1-hour ROP target years for which the 1-hour ROP obligation exists.

(2) *8–Hour NAAQS Nonattainment/1–Hour NAAQS Maintenance.* An area designated nonattainment for the 8-hour NAAQS that is a maintenance area for the 1-hour NAAQS at the time of designation for the 8-hour NAAQS for that area remains subject to the obligation to implement the applicable requirements as defined in § 51.900 (f) to the extent such obligations are required by the approved SIP, except as provided in paragraph (b) of this section. Applicable measures in the SIP must continue to be implemented; however, if these measures were shifted to contingency measures prior to designation for the 8-hour NAAQS for the area, they may remain as contingency measures, unless the measures are required to be implemented by the CAA by virtue of the area's requirements under the 8-hour NAAQS. The State may not remove such measures from the SIP.

(3) *8–Hour NAAQS Attainment/1–Hour NAAQS Nonattainment*—(i) *Obligations in an approved SIP.* For an area that is 8-hour NAAQS attainment/1-hour NAAQS nonattainment, the State may request that obligations under the applicable requirements of § 51.900(f) be shifted to contingency measures, consistent with sections 110(l) and 193 of the CAA, after revocation of the 1-hour NAAQS; however, the State cannot remove the obligations from the SIP. For such areas, the State may request that the nonattainment NSR provisions be removed from the SIP on or after the date of revocation of the 1-hour NAAQS and need not be shifted to contingency measures subject to paragraph (e)(4) of this section.

(ii) *Attainment demonstration and ROP plans.* (A) To the extent an 8-hour NAAQS attainment/1-hour NAAQS nonattainment area does not have an approved attainment demonstration or ROP plan that was required for the 1-hour NAAQS under the CAA, the obligation to submit such an attainment demonstration or ROP plan

(*1*) Is deferred for so long as the area continues to maintain the 8-hour NAAQS; and

(*2*) No longer applies once the area has an approved maintenance plan pursuant to paragraph (a)(3)(iii) of this section.

(B) For an 8-hour NAAQS attainment/1-hour NAAQS nonattainment area that violates the 8-hour NAAQS, prior to having an approved maintenance plan for the 8-hour NAAQS as provided under paragraph (a)(3)(iii) of this section, paragraphs (a)(3)(ii)(B)(*1*), (*2*), and (*3*) of this section shall apply.

(*1*) In lieu of any outstanding obligation to submit an attainment demonstration, within 1 year after the date on which EPA publishes a determination that a violation of the 8-hour NAAQS has occurred, the State must submit (or revise a submitted) maintenance plan for the 8-hour NAAQS, as provided under paragraph (a)(3)(iii) of this section, to—

(*i*) Address the violation by relying on modeling that meets EPA guidance for purposes of demonstrating maintenance of the NAAQS; or

(*ii*) Submit a SIP providing for a 3 percent increment of emissions reductions from the area's 2002 emissions baseline; these reductions must be in addition to measures (or enforceable commitments to measures) in the SIP at the time of the effective date of designation and in addition to national or regional measures.

(*2*) The plan required under paragraph (a)(3)(ii)(B)(*1*) of this section

must provide for the emission reductions required within 3 years after the date on which EPA publishes a determination that a violation of the 8-hour NAAQS has occurred.

(*3*) The State shall submit an ROP plan to achieve any outstanding ROP reductions that were required for the area for the 1-hour NAAQS, and the 3-year period or periods for achieving the ROP reductions will begin January 1 of the year following the 3-year period on which EPA bases its determination that a violation of the 8-hour NAAQS occurred.

(iii) *Maintenance plans for the 8-hour NAAQS.* For areas initially designated attainment for the 8-hour NAAQS, and designated nonattainment for the 1-hour NAAQS at the time of designation for the 8-hour NAAQS, the State shall submit no later than 3 years after the area's designation for the 8-hour NAAQS, a maintenance plan for the 8-hour NAAQS in accordance with section 110(a)(1) of the CAA. The maintenance plan must provide for continued maintenance of the 8-hour NAAQS for 10 years following designation and must include contingency measures. This provision does not apply to areas redesignated from nonattainment to attainment for the 8-hour NAAQS pursuant to CAA section 107(d)(3); such areas are subject to the maintenance plan requirement in section 175A of the CAA.

(4) *8-Hour NAAQS Attainment/1–Hour NAAQS Maintenance*—(i) *Obligations in an approved SIP.* For an 8-hour NAAQS attainment/1-hour NAAQS maintenance area, the State may request that obligations under the applicable requirements of § 51.900(f) be shifted to contingency measures, consistent with sections 110(l) and 193 of the CAA, after revocation of the 1-hour NAAQS; however, the State cannot remove the obligations from the SIP.

(ii) *Maintenance Plans for the 8-hour NAAQS.* For areas initially designated attainment for the 8-hour NAAQS and subject to the maintenance plan for the 1-hour NAAQS at the time of designation for the 8-hour NAAQS, the State shall submit no later than 3 years after the area's designation for the 8-hour NAAQS, a maintenance plan for the 8-hour NAAQS in accordance with section 110(a)(1) of the CAA. The maintenance plan must provide for continued maintenance of the 8-hour NAAQS for 10 years following designation and must include contingency measures. This provision does not apply to areas redesignated from nonattainment to attainment for the 8-hour NAAQS pursuant to section 107(d)(3); such areas are subject to the maintenance plan requirement in section 175A of the CAA.

(b) *Does attainment of the ozone NAAQS affect the obligations under paragraph (a) of this section?* A State remains subject to the obligations under paragraphs (a)(1)(i) and (a)(2) of this section until the area attains the 8-hour NAAQS. After the area attains the 8-hour NAAQS, the State may request such obligations be shifted to contingency measures, consistent with sections 110(l) and 193 of the CAA; however, the State cannot remove the obligations from the SIP. Once an area attains the 1-hour NAAQS, the section 172 and 182 contingency measures under the 1-hour NAAQS can be shifted to contingency measures for the 1997 8-hour ozone NAAQS and must remain in the SIP until the area is redesignated to attainment for the 1997 8-hour NAAQS.

(c) *Which portions of an area designated for the 8-hour NAAQS remain subject to the obligations identified in paragraph (a) of this section?* (1) Except as provided in paragraph (c)(2) of this section, only the portion of the designated area for the 8-hour NAAQS that was required to adopt the applicable requirements in § 51.900(f) for purposes of the 1-hour NAAQS is subject to the obligations identified in paragraph (a) of this section, including the requirement to submit a maintenance plan for purposes of paragraph (a)(3)(iii) of this section. 40 CFR part 81, subpart C identifies the boundaries of areas and the area designations and classifications for the 1-hour NAAQS in place as of the effective date of designation for the 8-hour NAAQS.

(2) For purposes of paragraph (a)(1)(ii)(B) and (C) of this section, the requirement to achieve emission reductions applies to the entire area designated nonattainment for the 8-hour ozone NAAQS.

(d) [Reserved]

(e) *What obligations that applied for the 1-hour NAAQS will no longer apply after revocation of the 1-hour NAAQS for an area?*—(1) *Maintenance plans.* Upon revocation of the 1-hour NAAQS, an area with an approved 1-hour maintenance plan under section 175A of the CAA may modify the maintenance plan: To remove the obligation to submit a maintenance plan for the 1-hour NAAQS 8 years after approval of the initial 1-hour maintenance plan; and to remove the obligation to implement contingency measures upon a violation of the 1-hour NAAQS. However, such requirements will remain enforceable as part of the approved SIP until such time as EPA approves a SIP revision removing such obligations. The EPA shall not approve a SIP revision requesting these modifications until the State submits and EPA approves an attainment demonstration for the 8-hour NAAQS for an area initially designated nonattainment for the 8-hour ozone NAAQS or a maintenance SIP for the 8-hour NAAQS for an area initially designated attainment for the 8-hour NAAQS. Any revision to such SIP must meet the requirements of section 110(l) and 193 of the CAA.

(2) *Findings of failure to attain the 1-hour NAAQS.* (i) Upon revocation of the 1-hour NAAQS for an area, EPA is no longer obligated—

(A) To determine pursuant to section 181(b)(2) or section 179(c) of the CAA whether an area attained the 1-hour NAAQS by that area's attainment date for the 1-hour NAAQS; or

(B) To reclassify an area to a higher classification for the 1-hour NAAQS based upon a determination that the area failed to attain the 1-hour NAAQS by the area's attainment date for the 1-hour NAAQS.

(ii)–(iii) [Reserved]

(3) *Conformity determinations for the 1-hour NAAQS.* Upon revocation of the 1-hour NAAQS for an area, conformity determinations pursuant to section 176(c) of the CAA are no longer required for the 1-hour NAAQS. At that time, any provisions of applicable SIPs that require conformity determinations in such areas for the 1-hour NAAQS will no longer be enforceable pursuant to section 176(c)(5) of the CAA.

(f) *What is the continued applicability of the* NO_X SIP Call after revocation of the 1-hour NAAQS? The NO_X SIP Call shall continue to apply after revocation of the 1-hour NAAQS. Control obligations approved into the SIP pursuant to 40 CFR 51.121 and 51.122 may be modified by the State only if the requirements of §§ 51.121 and 51.122, including the statewide NO_X emission budgets, continue to be met and the State makes a showing consistent with section 110(l) of the CAA.

[69 FR 23996, Apr. 30, 2004, as amended at 70 FR 30604, May 26, 2005; 70 FR 44474, Aug. 3, 2005; 77 FR 28441, May 14, 2012]

§ 51.906 Redesignation to nonattainment following initial designations for the 8-hour NAAQS.

For any area that is initially designated attainment or unclassifiable for the 8-hour NAAQS and that is subsequently redesignated to nonattainment for the 8-hour ozone NAAQS, any absolute, fixed date applicable in connection with the requirements of this part is extended by a period of time equal to the length of time between the effective date of the initial designation for the 8-hour NAAQS and the effective date of redesignation, except as otherwise provided in this subpart.

[70 FR 71700, Nov. 29, 2005]

§ 51.907 For an area that fails to attain the 8-hour NAAQS by its attainment date, how does EPA interpret sections 172(a)(2)(C)(ii) and 181(a)(5)(B) of the CAA?

For purposes of applying sections 172(a)(2)(C) and 181(a)(5) of the CAA, an area will meet the requirement of section 172(a)(2)(C)(ii) or 181(a)(5)(B) of the CAA pertaining to 1-year extensions of the attainment date if:

(a) For the first 1-year extension, the area's 4th highest daily 8-hour average in the attainment year is 0.084 ppm or less.

(b) For the second 1-year extension, the area's 4th highest daily 8-hour value, averaged over both the original attainment year and the first extension year, is 0.084 ppm or less.

(c) For purposes of paragraphs (a) and (b) of this section, the area's 4th highest daily 8-hour average shall be from

the monitor with the highest 4th highest daily 8-hour average of all the monitors that represent that area.

§ 51.908 What modeling and attainment demonstration requirements apply for purposes of the 8-hour ozone NAAQS?

(a) *What is the attainment demonstration requirement for an area classified as moderate or higher under subpart 2 pursuant to § 51.903?* An area classified as moderate or higher under § 51.903 shall be subject to the attainment demonstration requirement applicable for that classification under section 182 of the Act, except such demonstration is due no later than 3 years after the area's designation for the 8-hour NAAQS.

(b) *What is the attainment demonstration requirement for an area subject only to subpart 1 in accordance with § 51.902(b)?* An area subject to § 51.902(b) shall be subject to the attainment demonstration under section 172(c)(1) of the Act and shall submit an attainment demonstration no later than 3 years after the area's designation for the 8-hour NAAQS.

(c) *What criteria must the attainment demonstration meet?* An attainment demonstration due pursuant to paragraph (a) or (b) of this section must meet the requirements of § 51.112; the adequacy of an attainment demonstration shall be demonstrated by means of a photochemical grid model or any other analytical method determined by the Administrator, in the Administrator's discretion, to be at least as effective.

(d)For each nonattainment area, the State must provide for implementation of all control measures needed for attainment no later than the beginning of the attainment year ozone season.

[69 FR 23996, Apr. 30, 2004, as amended at 70 FR 71700, Nov. 29, 2005]

§ 51.909 [Reserved]

§ 51.910 What requirements for reasonable further progress (RFP) under sections 172(c)(2) and 182 apply for areas designated nonattainment for the 8-hour ozone NAAQS?

(a) *What are the general requirements for RFP for an area classified under subpart 2 pursuant to § 51.903?* For an area classified under subpart 2 pursuant to § 51.903, the RFP requirements specified in section 182 of the Act for that area's classification shall apply.

(1) *What is the content and timing of the RFP plan required under sections 182(b)(1) and 182(c)(2)(B) of the Act for an area classified as moderate or higher pursuant to § 51.903 (subpart 2 coverage)?*

(i) *Moderate or Above Area.* (A) Except as provided in paragraph (a)(1)(ii) of this section, for each area classified as moderate or higher, the State shall submit a SIP revision consistent with section 182(b)(1) of the Act no later than 3 years after designation for the 8-hour NAAQS for the area. The 6-year period referenced in section 182(b)(1) of the Act shall begin January 1 of the year following the year used for the baseline emissions inventory.

(B) For each area classified as serious or higher, the State shall submit a SIP revision consistent with section 182(c)(2)(B) of the Act no later than 3 years after designation for the 8-hour NAAQS. The final increment of progress must be achieved no later than the attainment date for the area.

(ii) *Area with Approved 1-hour Ozone 15 Percent VOC ROP Plan.* An area classified as moderate or higher that has the same boundaries as an area, or is entirely composed of several areas or portions of areas, for which EPA fully approved a 15 percent plan for the 1-hour NAAQS is considered to have met section 182(b)(1) of the Act for the 8-hour NAAQS and instead:

(A) If classified as moderate, the area is subject to RFP under section 172(c)(2) of the Act and shall submit no later than 3 years after designation for the 8-hour NAAQS a SIP revision that meets the requirements of paragraph (b)(2) of this section, consistent with the attainment date established in the attainment demonstration SIP.

(B) If classified as serious or higher, the area is subject to RFP under section 182(c)(2)(B) of the Act and shall submit no later than 3 years after designation for the 8-hour NAAQS an RFP SIP providing for an average of 3 percent per year of VOC and/or NO_X emissions reductions for

(*1*) the 6-year period beginning January 1 of the year following the year

used for the baseline emissions inventory; and

(*2*) all remaining 3-year periods after the first 6-year period out to the area's attainment date.

(iii) *Moderate and Above Area for Which Only a Portion Has an Approved 1-hour Ozone 15 Percent VOC ROP Plan.* An area classified as moderate or higher that contains one or more areas, or portions of areas, for which EPA fully approved a 15 percent plan for the 1-hour NAAQS as well as areas for which EPA has not fully approved a 15 percent plan for the 1-hour NAAQS shall meet the requirements of either paragraph (a)(1)(iii)(A) or (B) below.

(A) The State shall not distinguish between the portion of the area that previously met the 15 percent VOC reduction requirement and the portion of the area that did not, and

(*1*) The State shall submit a SIP revision consistent with section 182(b)(1) of the Act no later than 3 years after designation for the 8-hour NAAQS for the entire area. The 6-year period referenced in section 182(b)(1) of the Act shall begin January 1 of the year following the year used for the baseline emissions inventory.

(*2*) For each area classified as serious or higher, the State shall submit a SIP revision consistent with section 182(c)(2)(B) of the Act no later than 3 years after designation for the 8-hour NAAQS. The final increment of progress must be achieved no later than the attainment date for the area.

(B) The State shall treat the area as two parts, each with a separate RFP target as follows:

(*1*) For the portion of the area without an approved 15 percent VOC RFP plan for the 1-hour standard, the State shall submit a SIP revision consistent with section 182(b)(1) of the Act no later than 3 years after designation for the 8-hour NAAQS for the area. The 6-year period referenced in section 182(b)(1) of the Act shall begin January 1 of the year following the year used for the baseline emissions inventory. Emissions reductions to meet this requirement may come from anywhere within the 8-hour nonattainment area.

(*2*) For the portion of the area with an approved 15 percent VOC plan for the 1-hour NAAQS, the State shall submit a SIP as required under paragraph (b)(2)of this section.

(2) *What restrictions apply on the creditability of emission control measures for the RFP plans required under this section?* Except as specifically provided in section 182(b)(1)(C) and (D) and section 182(c)(2)(B) of the Act, all SIP-approved or federally promulgated emissions reductions that occur after the baseline emissions inventory year are creditable for purposes of the RFP requirements in this section, provided the reductions meet the requirements for creditability, including the need to be enforceable, permanent, quantifiable and surplus, as described for purposes of State economic incentive programs in the requirements of §51.493 of this part.

(b) *How does the RFP requirement of section 172(c)(2) of the Act apply to areas subject to that requirement?* (1) An area subject to the RFP requirement of subpart 1 pursuant to §51.902(b) or a moderate area subject to subpart 2 as covered in paragraphs (a)(1)(ii)(A) of this section shall meet the RFP requirements of section 172(c)(2) of the Act as provided in paragraph (b)(2) of this section.

(2) The State shall submit no later than 3 years following designation for the 8-hour NAAQS a SIP providing for RFP consistent with the following:

(i) For each area with an attainment demonstration requesting an attainment date of 5 years or less after designation for the 8-hour NAAQS, the attainment demonstration SIP shall require that all emissions reductions needed for attainment be implemented by the beginning of the attainment year ozone season.

(ii) For each area with an attainment demonstration requesting an attainment date more than 5 years after designation for the 8-hour NAAQS, the attainment demonstration SIP—

(A) Shall provide for a 15 percent emission reduction from the baseline year within 6 years after the baseline year.

(B) May use either NO_X or VOC emissions reductions (or both) to achieve the 15 percent emission reduction requirement. Use of NO_X emissions reductions must meet the criteria in section 182(c)(2)(C) of the Act.

(C) For each subsequent 3-year period out to the attainment date, the RFP SIP must provide for an additional increment of progress. The increment for each 3-year period must be a portion of the remaining emission reductions needed for attainment beyond those reductions achieved for the first increment of progress (e.g., beyond 2008 for areas designated nonattainment in June 2004). Specifically, the amount of reductions needed for attainment is divided by the number of years needed for attainment after the first increment of progress in order to establish an ''annual increment.'' For each 3-year period out to the attainment date, the area must achieve roughly the portion of reductions equivalent to three annual increments.

(c) *What method should a State use to calculate RFP targets?* In calculating RFP targets for the initial 6-year period and the subsequent 3-year periods pursuant to this section, the State shall use the methods consistent with the requirements of sections 182(b)(1)(C) and (D) and 182(c)(2)(B) to properly account for non-creditable reductions.

(d) *What is the baseline emissions inventory for RFP plans?* For the RFP plans required under this section, the baseline emissions inventory shall be determined at the time of designation of the area for the 8-hour NAAQS and shall be the emissions inventory for the most recent calendar year for which a complete inventory is required to be submitted to EPA under the provisions of subpart A of this part or a more recent alternative baseline emissions inventory provided the State demonstrates that the baseline inventory meets the CAA provisions for RFP and provides a rationale for why it is appropriate to use the alternative baseline year rather than 2002 to comply with the CAA's RFP provisions.

[70 FR 71700, Nov. 29, 2005]

§ 51.911 [Reserved]

§ 51.912 What requirements apply for reasonably available control technology (RACT) and reasonably available control measures (RACM) under the 8-hour NAAQS?

(a) *What is the RACT requirement for areas subject to subpart 2 in accordance with § 51.903?* (1) For each area subject to subpart 2 in accordance with § 51.903 of this part and classified moderate or higher, the State shall submit a SIP revision that meets the NO_X and VOC RACT requirements in sections 182(b)(2) and 182(f) of the Act.

(2) The State shall submit the RACT SIP for each area no later than 27 months after designation for the 8-hour ozone NAAQS, except that for a State subject to the requirements of the Clean Air Interstate Rule, the State shall submit NO_X RACT SIPs for electrical generating units (EGUs) no later than the date by which the area's attainment demonstration is due (prior to any reclassification under section 181(b)(3)) for the 8-hour ozone national ambient air quality standard, or July 9, 2007, whichever comes later.

(3) The State shall provide for implementation of RACT as expeditiously as practicable but no later than the first ozone season or portion thereof which occurs 30 months after the RACT SIP is due.

(b) *How do the RACT provisions apply to a major stationary source?* Volatile organic compounds and NO_X are to be considered separately for purposes of determining whether a source is a major stationary source as defined in section 302 of the Act.

(c) *What is the RACT requirement for areas subject only to subpart 1 pursuant to § 51.902(b)?* Areas subject only to subpart 1 pursuant to § 51.902(b) are subject to the RACT requirement specified in section 172(c)(1) of the Act.

(1) For an area that submits an attainment demonstration that requests an attainment date 5 years or less after designation for the 8-hour NAAQS, the State shall meet the RACT requirement by submitting an attainment demonstration SIP demonstrating that the area has adopted all control measures necessary to demonstrate attainment as expeditiously as practicable.

(2) For an area that submits an attainment demonstration that requests an attainment date more than 5 years after designation for the 8-hour NAAQS, the State shall submit a SIP consistent with the requirements of §51.912(a) and (b) except the State shall submit the RACT SIP for each area with its request pursuant to Clean Air Act section 172(a)(2)(A) to extend the attainment date.

(d) *What is the Reasonably Available Control Measures (RACM) requirement for areas designated nonattainment for the 8-hour NAAQS?* For each nonattainment area required to submit an attainment demonstration under §51.908, the State shall submit with the attainment demonstration a SIP revision demonstrating that it has adopted all RACM necessary to demonstrate attainment as expeditiously as practicable and to meet any RFP requirements.

[70 FR 71701, Nov. 29, 2005, as amended at 72 FR 31749, June 8, 2007]

§51.913 How do the section 182(f) NO_X exemption provisions apply for the 8-hour NAAQS?

(a) A person may petition the Administrator for an exemption from NO_X obligations under section 182(f) for any area designated nonattainment for the 8-hour ozone NAAQS and for any area in a section 184 ozone transport region.

(b) The petition must contain adequate documentation that the criteria in section 182(f) are met.

(c) A section 182(f) NO_X exemption granted for the 1-hour ozone standard does not relieve the area from any NO_X obligations under section 182(f) for the 8-hour ozone standard.

[70 FR 71701, Nov. 29, 2005]

§51.914 What new source review requirements apply for 8-hour ozone nonattainment areas?

The requirements for new source review for the 8-hour ozone standard are located in §51.165 of this part.

[70 FR 71702, Nov. 29, 2005]

§51.915 What emissions inventory requirements apply under the 8-hour NAAQS?

For each nonattainment area subject to subpart 2 in accordance with §51.903, the emissions inventory requirements in sections 182(a)(1) and 182(a)(3) of the Act shall apply, and such SIP shall be due no later 2 years after designation. For each nonattainment area subject only to title I, part D, subpart 1 of the Act in accordance with §51.902(b), the emissions inventory requirement in section 172(c)(3) of the Act shall apply, and an emission inventory SIP shall be due no later 3 years after designation. For purposes of defining the data elements for the emissions inventories for these areas, the ozone-relevant data element requirements under 40 CFR part 51 subpart A apply.

[70 FR 71702, Nov. 29, 2005]

§51.916 What are the requirements for an Ozone Transport Region under the 8-hour NAAQS?

(a) In General. Sections 176A and 184 of the Act apply for purposes of the 8-hour NAAQS.

(b) RACT Requirements for Certain Portions of an Ozone Transport Region.

(1) The State shall submit a SIP revision that meets the RACT requirements of section 184 of the Act for each area that is located in an ozone transport region and that is—

(i) Designated as attainment or unclassifiable for the 8-hour standard;

(ii) Designated nonattainment and classified as marginal for the 8-hour standard; or

(iii) Designated nonattainment and covered solely under subpart 1 of part D, title I of the CAA for the 8-hour standard.

(2) The State is required to submit the RACT revision no later than September 16, 2006 and shall provide for implementation of RACT as expeditiously as practicable but no later than May 1, 2009.

[70 FR 71702, Nov. 29, 2005]

§ 51.917 What is the effective date of designation for the Las Vegas, NV, 8-hour ozone nonattainment area?

The Las Vegas, NV, 8-hour ozone nonattainment area (designated on September 17, 2004 (69 FR 55956)) shall be treated as having an effective date of designation of June 15, 2004, for purposes of calculating SIP submission deadlines, attainment dates, or any other deadline under this subpart.

[70 FR 71702, Nov. 29, 2005]

§ 51.918 Can any SIP planning requirements be suspended in 8-hour ozone nonattainment areas that have air quality data that meets the NAAQS?

Upon a determination by EPA that an area designated nonattainment for the 8-hour ozone NAAQS has attained the standard, the requirements for such area to submit attainment demonstrations and associated reasonably available control measures, reasonable further progress plans, contingency measures, and other planning SIPs related to attainment of the 8-hour ozone NAAQS shall be suspended until such time as: the area is redesignated to attainment, at which time the requirements no longer apply; or EPA determines that the area has violated the 8-hour ozone NAAQS.

[70 FR 71702, Nov. 29, 2005]

Subpart Y—Mitigation Requirements

§ 51.930 Mitigation of Exceptional Events.

(a) A State requesting to exclude air quality data due to exceptional events must take appropriate and reasonable actions to protect public health from exceedances or violations of the national ambient air quality standards. At a minimum, the State must:

(1) Provide for prompt public notification whenever air quality concentrations exceed or are expected to exceed an applicable ambient air quality standard;

(2) Provide for public education concerning actions that individuals may take to reduce exposures to unhealthy levels of air quality during and following an exceptional event; and

(3) Provide for the implementation of appropriate measures to protect public health from exceedances or violations of ambient air quality standards caused by exceptional events.

(b) [Reserved]

[72 FR 13581, Mar. 22, 2007]

Subpart Z—Provisions for Implementation of $PM_{2.5}$ National Ambient Air Quality Standards

SOURCE: 72 FR 20664, April 25, 2007, unless otherwise noted.

§ 51.1000 Definitions.

The following definitions apply for purposes of this subpart. Any term not defined herein shall have the meaning as defined in 40 CFR 51.100.

Act means the Clean Air Act as codified at 42 U.S.C. 7401–7671q. (2003).

Attainment date means the date by which an area, under an approved State implementation plan, is required to attain the $PM_{2.5}$ NAAQS (based on the average of three consecutive years of ambient air quality data).

Baseline year inventory for the RFP plan is the emissions inventory for the year also used as the base year for the attainment demonstration.

Benchmark RFP plan means the reasonable further progress plan that requires generally linear emission reductions in pollutants from the baseline emissions year through the milestone inventory year.

Date of designation means the effective date of the $PM_{2.5}$ area designation as promulgated by the Administrator.

Direct $PM_{2.5}$ emissions means solid particles emitted directly from an air emissions source or activity, or gaseous emissions or liquid droplets from an air emissions source or activity which condense to form particulate matter at ambient temperatures. Direct $PM_{2.5}$ emissions include elemental carbon, directly emitted organic carbon, directly emitted sulfate, directly emitted nitrate, and other inorganic particles (including but not limited to crustal material, metals, and sea salt).

Existing control measure means any Federally enforceable national, State, or local control measure that has been

approved in the SIP and that results in reductions in emissions of $PM_{2.5}$ or $PM_{2.5}$ precursors in a nonattainment area.

Full implementation inventory is the projected RFP emission inventory for the year preceding the attainment date, representing a level of emissions that demonstrates attainment.

Milestone year inventory is the projected RFP emission inventory for the applicable RFP milestone year (*i.e.* 2009 and, where applicable, 2012).

$PM_{2.5}$ NAAQS means the particulate matter national ambient air quality standards (annual and 24-hour) codified at 40 CFR 50.7.

$PM_{2.5}$ design value for a nonattainment area is the highest of the three-year average concentrations calculated for the monitors in the area, in accordance with 40 CFR part 50, appendix N.

$PM_{2.5}$ attainment plan precursor means $S0_2$ and those other $PM_{2.5}$ precursors emitted by sources in the State which the State must evaluate for emission reduction measures to be included in its $PM_{2.5}$ nonattainment area or maintenance area plan.

$PM_{2.5}$ precursor means those air pollutants other than $PM_{2.5}$ direct emissions that contribute to the formation of $PM_{2.5}$. $PM_{2.5}$ precursors include $S0_2$, NO_X, volatile organic compounds, and ammonia.

Reasonable further progress (RFP) means the incremental emissions reductions toward attainment required under sections 172(c)(2) and 171(1).

Subpart 1 means the general attainment plan requirements found in subpart 1 of part D of title I of the Act.

§51.1001 Applicability of part 51.

The provisions in subparts A through X of this part apply to areas for purposes of the $PM_{2.5}$ NAAQS to the extent they are not inconsistent with the provisions of this subpart.

§51.1002 Submittal of State implementation plan.

(a) For any area designated by EPA as nonattainment for the $PM_{2.5}$ NAAQS, the State must submit a State implementation plan satisfying the requirements of section 172 of the Act and this subpart to EPA by the date prescribed by EPA which will be no later than 3 years from the date of designation.

(b) The State must submit a plan consistent with the requirements of section 110(a)(2) of the Act unless the State already has fulfilled this obligation for the purposes of implementing the $PM_{2.5}$ NAAQS.

(c) *Pollutants contributing to fine particle concentrations.* The State implementation plan must identify and evaluate sources of $PM_{2.5}$ direct emissions and $PM_{2.5}$ attainment plan precursors in accordance with §§51.1009 and 51.1010. After January 1, 2011, for purposes of establishing emissions limits under 51.1009 and 51.1010, States must establish such limits taking into consideration the condensable fraction of direct $PM_{2.5}$ emissions. Prior to this date, States are not prohibited from establishing source emission limits that include the condensable fraction of direct $PM_{2.5}$.

(1) The State must address sulfur dioxide as a $PM_{2.5}$ attainment plan precursor and evaluate sources of SO_2 emissions in the State for control measures.

(2) The State must address NO_X as a $PM_{2.5}$ attainment plan precursor and evaluate sources of NO_X emissions in the State for control measures, unless the State and EPA provide an appropriate technical demonstration for a specific area showing that NO_X emissions from sources in the State do not significantly contribute to $PM_{2.5}$ concentrations in the nonattainment area.

(3) The State is not required to address VOC as a $PM_{2.5}$ attainment plan precursor and evaluate sources of VOC emissions in the State for control measures, unless:

(i) the State provides an appropriate technical demonstration for a specific area showing that VOC emissions from sources in the State significantly contribute to $PM_{2.5}$ concentrations in the nonattainment area, and such demonstration is approved by EPA; or

(ii) The EPA provides such a technical demonstration.

(4) The State is not required to address ammonia as a $PM_{2.5}$ attainment plan precursor and evaluate sources of ammonia emissions from sources in the State for control measures, unless:

(i) The State provides an appropriate technical demonstration for a specific area showing that ammonia emissions from sources in the State significantly contribute to $PM_{2.5}$ concentrations in the nonattainment area, and such demonstration is approved by EPA; or

(ii) The EPA provides such a technical demonstration.

(5) The State must submit a demonstration to reverse any presumption in this rule for a $PM_{2.5}$ precursor with respect to a particular nonattainment area, if the administrative record related to development of its SIP shows that the presumption is not technically justified for that area.

§ 51.1003 [Reserved]

§ 51.1004 Attainment dates.

(a) Consistent with section 172(a)(2)(A) of the Act, the attainment date for an area designated nonattainment for the $PM_{2.5}$ NAAQS will be the date by which attainment can be achieved as expeditiously as practicable, but no more than five years from the date of designation. The Administrator may extend the attainment date to the extent the Administrator determines appropriate, for a period no greater than 10 years from the date of designation, considering the severity of nonattainment and the availability and feasibility of pollution control measures.

(b) In the SIP submittal for each of its nonattainment areas, the State must submit an attainment demonstration justifying its proposed attainment date. For each nonattainment area, the Administrator will approve an attainment date at the same time the Administrator approves the attainment demonstration for the area, consistent with the attainment date timing provision of section 172(a)(2)(A) and paragraph (a) of this section.

(c) Upon a determination by EPA that an area designated nonattainment for the $PM_{2.5}$ NAAQS has attained the standard, the requirements for such area to submit attainment demonstrations and associated reasonably available control measures, reasonable further progress plans, contingency measures, and other planning SIPs related to attainment of the $PM_{2.5}$ NAAQS shall be suspended until such time as: the area is redesignated to attainment, at which time the requirements no longer apply; or EPA determines that the area has violated the $PM_{2.5}$ NAAQS, at which time the area is again required to submit such plans.

§ 51.1005 One-year extensions of the attainment date.

(a) Pursuant to section 172(a)(2)(C)(ii) of the Act, a State with an area that fails to attain the $PM_{2.5}$ NAAQS by its attainment date may apply for an initial 1-year attainment date extension if the State has complied with all requirements and commitments pertaining to the area in the applicable implementation plan, and:

(1) For an area that violates the annual $PM_{2.5}$ NAAQS as of its attainment date, the annual average concentration for the most recent year at each monitor is 15.0 $\mu g/m^3$ or less (calculated according to the data analysis requirements in 40 CFR part 50, appendix N).

(2) For an area that violates the 24-hour $PM_{2.5}$ NAAQS as of its attainment date, the 98th percentile concentration for the most recent year at each monitor is 65 $\mu g/m^3$ or less (calculated according to the data analysis requirements in 40 CFR part 50, appendix N).

(b) An area that fails to attain the $PM_{2.5}$ NAAQS after receiving a 1-year attainment date extension may apply for a second 1-year attainment date extension pursuant to section 172(a)(2)(C)(ii) if the State has complied with all requirements and commitments pertaining to the area in the applicable implementation plan, and:

(1) For an area that violates the annual $PM_{2.5}$ NAAQS as of its attainment date, the two-year average of annual average concentrations at each monitor, based on the first extension year and the previous year, is 15.0 $\mu g/m^3$ or less (calculated according to the data analysis requirements in 40 CFR part 50, appendix N).

(2) For an area that violates the 24-hour $PM_{2.5}$ NAAQS as of its attainment date, the two-year average of annual 98th percentile concentrations at each monitor, based on the first extension year and the previous year, is 65 $\mu g/m^3$ or less (calculated according to the

data analysis requirements in 40 CFR part 50, appendix N).

§51.1006 Redesignation to nonattainment following initial designations for the $PM_{2.5}$ NAAQS.

Any area that is initially designated ''attainment/unclassifiable'' for the $PM_{2.5}$ NAAQS may be subsequently redesignated to nonattainment if ambient air quality data in future years indicate that such a redesignation is appropriate. For any such area that is redesignated to nonattainment for the $PM_{2.5}$ NAAQS, any absolute, fixed date that is applicable in connection with the requirements of this part is extended by a period of time equal to the length of time between the effective date of the initial designation for the $PM_{2.5}$ NAAQS and the effective date of redesignation, except as otherwise provided in this subpart.

§51.1007 Attainment demonstration and modeling requirements.

(a) For any area designated as nonattainment for the $PM_{2.5}$ NAAQS, the State must submit an attainment demonstration showing that the area will attain the annual and 24-hour standards as expeditiously as practicable. The demonstration must meet the requirements of §51.112 and Appendix W of this part and must include inventory data, modeling results, and emission reduction analyses on which the State has based its projected attainment date. The attainment date justified by the demonstration must be consistent with the requirements of §51.1004(a). The modeled strategies must be consistent with requirements in §51.1009 for RFP and in §51.1010 for RACT and RACM. The attainment demonstration and supporting air quality modeling should be consistent with EPA's $PM_{2.5}$ modeling guidance.

(b) *Required time frame for obtaining emissions reductions.* For each nonattainment area, the State implementation plan must provide for implementation of all control measures needed for attainment as expeditiously as practicable, but no later than the beginning of the year prior to the attainment date. Consistent with section 172(c)(1) of the Act, the plan must provide for implementation of all RACM and RACT as expeditiously as practicable. The plan also must include RFP milestones in accordance with §51.1009, and control measures needed to meet these milestones, as necessary.

§51.1008 Emission inventory requirements for the $PM_{2.5}$ NAAQS.

(a) For purposes of meeting the emission inventory requirements of section 172(c)(3) of the Act for nonattainment areas, the State shall, no later than three years after designation:

(1) Submit to EPA Statewide emission inventories for direct $PM_{2.5}$ emissions and emissions of $PM_{2.5}$ precursors. For purposes of defining the data elements for these inventories, the $PM_{2.5}$ and $PM_{2.5}$ precursor-relevant data element requirements under subpart A of this part shall apply.

(2) Submit any additional emission inventory information needed to support an attainment demonstration and RFP plan ensuring expeditious attainment of the annual and 24-hour $PM_{2.5}$ standards.

(b) For inventories required for submission under paragraph (a) of this section, a baseline emission inventory is required for the attainment demonstration required under §51.1007 and for meeting RFP requirements under §51.1009. As determined on the date of designation, the base year for this inventory shall be the most recent calendar year for which a complete inventory was required to be submitted to EPA pursuant to subpart A of this part. The baseline emission inventory for calendar year 2002 or other suitable year shall be used for attainment planning and RFP plans for areas initially designated nonattainment for the $PM_{2.5}$ NAAQS in 2004–2005.

§51.1009 Reasonable further progress (RFP) requirements.

(a) Consistent with section 172(c)(2) of the Act, State implementation plans for areas designated nonattainment for the $PM_{2.5}$ NAAQS must demonstrate reasonable further progress as provided in §51.1009(b) through (h).

(b) If the State submits to EPA an attainment demonstration and State implementation plan for an area which demonstrates that it will attain the PM NAAQS within five years of the

date of designation, the State is not required to submit a separate RFP plan. Compliance with the emission reduction measures in the attainment demonstration and State implementation plan will meet the requirements for achieving reasonable further progress for the area.

(c) For any area for which the State submits to EPA an approvable attainment demonstration and State implementation plan that demonstrates the area needs an attainment date of more than five years from the date of designation, the State also must submit an RFP plan. The RFP plan must describe the control measures that provide for meeting the reasonable further progress milestones for the area, the timing of implementation of those measures, and the expected reductions in emissions of direct $PM_{2.5}$ and $PM_{2.5}$ attainment plan precursors. The RFP plan is due to EPA within three years of the date of designation.

(1) For any State that submits to EPA an approvable attainment demonstration and State implementation plan justifying an attainment date of more than five and less than nine years from the date of designation, the RFP plan must include 2009 emissions milestones for direct $PM_{2.5}$ and $PM_{2.5}$ attainment plan precursors demonstrating that reasonable further progress will be achieved for the 2009 emissions year.

(2) For any area that submits to EPA an approvable attainment demonstration and State implementation plan justifying an attainment date of nine or ten years from the date of designation, the RFP plan must include 2009 and 2012 emissions milestones for direct $PM_{2.5}$ and $PM_{2.5}$ attainment plan precursors demonstrating that reasonable further progress will be achieved for the 2009 and 2012 emissions years.

(d) The RFP plan must demonstrate that in each applicable milestone year, emissions will be at a level consistent with generally linear progress in reducing emissions between the base year and the attainment year.

(e) For a multi-State nonattainment area, the RFP plans for each State represented in the nonattainment area must demonstrate RFP on the basis of common multi-State inventories. The States within which the area is located must provide a coordinated RFP plan. Each State in a multi-State nonattainment area must ensure that the sources within its boundaries comply with enforceable emission levels and other requirements that in combination with the reductions planned in other state(s) will provide for attainment as expeditiously as practicable and demonstrate reasonable further progress.

(f) In the benchmark RFP plan, the State must identify direct $PM_{2.5}$ emissions and $PM_{2.5}$ attainment plan precursors regulated under the $PM_{2.5}$ attainment plan and specify target emission reduction levels to be achieved during the milestone years. In developing the benchmark RFP plan, the State must develop emission inventory information for the geographic area included in the plan and conduct the following calculations:

(1) For direct $PM_{2.5}$ emissions and each $PM_{2.5}$ attainment plan precursor addressed in the attainment strategy, the full implementation reduction is calculated by subtracting the full implementation inventory from the baseline year inventory.

(2) The ''milestone date fraction'' is the ratio of the number of years from the baseline year to the milestone inventory year divided by the number of years from the baseline year to the full implementation year.

(3) For direct $PM_{2.5}$ emissions and each $PM_{2.5}$ attainment plan precursor addressed in the attainment strategy, a benchmark emission reduction is calculated by multiplying the full implementation reduction by the milestone date fraction.

(4) The benchmark emission level in the milestone year is calculated for direct $PM_{2.5}$ emissions and each $PM_{2.5}$ attainment plan precursor by subtracting the benchmark emission reduction from the baseline year emission level. The benchmark RFP plan is defined as a plan that achieves benchmark emission levels for direct $PM_{2.5}$ emissions and each $PM_{2.5}$ attainment plan precursor addressed in the attainment strategy for the area.

(5) In comparing inventories between baseline and future years for direct

$PM_{2.5}$ emissions and each $PM_{2.5}$ attainment plan precursor, the inventories must be derived from the same geographic area. The plan must include emissions estimates for all types of emitting sources and activities in the geographic area from which the emission inventories for direct $PM_{2.5}$ emissions and each $PM_{2.5}$ attainment plan precursor addressed in the plan are derived.

(6) For purposes of establishing motor vehicle emissions budgets for transportation conformity purposes (as required in 40 CFR part 93) for a $PM_{2.5}$ nonattainment area, the State shall include in its RFP submittal an inventory of on-road mobile source emissions in the nonattainment area.

(g) The RFP plan due three years after designation must demonstrate that emissions for the milestone year are either:

(1) At levels that are roughly equivalent to the benchmark emission levels for direct $PM_{2.5}$ emissions and each $PM_{2.5}$ attainment plan precursor to be addressed in the plan; or

(2) At levels included in an alternative scenario that is projected to result in a generally equivalent improvement in air quality by the milestone year as would be achieved under the benchmark RFP plan.

(h) The equivalence of an alternative scenario to the corresponding benchmark plan must be determined by comparing the expected air quality changes of the two scenarios at the design value monitor location. This comparison must use the information developed for the attainment plan to assess the relationship between emissions reductions of the direct $PM_{2.5}$ emissions and each $PM_{2.5}$ attainment plan precursor addressed in the attainment strategy and the ambient air quality improvement for the associated ambient species.

§51.1010 Requirements for reasonably available control technology (RACT) and reasonably available control measures (RACM).

(a) For each $PM_{2.5}$ nonattainment area, the State shall submit with the attainment demonstration a SIP revision demonstrating that it has adopted all reasonably available control measures (including RACT for stationary sources) necessary to demonstrate attainment as expeditiously as practicable and to meet any RFP requirements. The SIP revision shall contain the list of the potential measures considered by the State, and information and analysis sufficient to support the State's judgment that it has adopted all RACM, including RACT.

(b) In determining whether a particular emission reduction measure or set of measures must be adopted as RACM under section 172(c)(1) of the Act, the State must consider the cumulative impact of implementing the available measures. Potential measures that are reasonably available considering technical and economic feasibility must be adopted as RACM if, considered collectively, they would advance the attainment date by one year or more.

§51.1011 Requirements for mid-course review.

(a) Any State that submits to EPA an approvable attainment plan for a $PM_{2.5}$ nonattainment area justifying an attainment date of nine or ten years from the date of designation also must submit to EPA a mid-course review six years from the date of designation.

(b) The mid-course review for an area must include:

(1) A review of emissions reductions and progress made in implementing control measures to reduce emissions of direct $PM_{2.5}$ and $PM_{2.5}$ attainment plan precursors contributing to $PM_{2.5}$ concentrations in the area;

(2) An analysis of changes in ambient air quality data for the area;

(3) Revised air quality modeling analysis to demonstrate attainment;

(4) Any new or revised control measures adopted by the State, as necessary to ensure attainment by the attainment date in the approved SIP of the nonattainment area.

§51.1012 Requirement for contingency measures.

Consistent with section 172(c)(9) of the Act, the State must submit in each attainment plan specific contingency measures to be undertaken if the area fails to make reasonable further progress, or fails to attain the $PM_{2.5}$ NAAQS by its attainment date. The

contingency measures must take effect without significant further action by the State or EPA.

Subpart AA—Provisions for Implementation of the 2008 Ozone National Ambient Air Quality Standards

SOURCE: 77 FR 30170, May 21, 2012, unless otherwise noted.

§ 51.1100 Definitions.

The following definitions apply for purposes of this subpart. Any term not defined herein shall have the meaning as defined in 40 CFR 51.100.

(a) *1-hour NAAQS* means the 1-hour primary and secondary ozone national ambient air quality standards codified at 40 CFR 50.9.

(b) *1997 NAAQS* means the 1997 8-hour primary and secondary ozone national ambient air quality standards codified at 40 CFR 50.10.

(c) *2008 NAAQS* means the 2008 8-hour primary and secondary ozone NAAQS codified at 40 CFR 50.15.

(d) *1-hour ozone design value* is the 1-hour ozone concentration calculated according to 40 CFR part 50, appendix H and the interpretation methodology issued by the Administrator most recently before the date of the enactment of the CAA Amendments of 1990.

(e) *8-hour ozone design value* is the 8-hour ozone concentration calculated according to 40 CFR part 50, appendix P.

(f) *CAA* means the Clean Air Act as codified at 42 U.S.C. 7401—7671q (2010).

(g) *Attainment area* means, unless otherwise indicated, an area designated as either attainment, unclassifiable, or attainment/unclassifiable.

(h) *Attainment year ozone season* shall mean the ozone season immediately preceding a nonattainment area's maximum attainment date.

(i) *Designation for the 2008 NAAQS* shall mean the effective date of the designation for an area for the 2008 NAAQS.

(j) *Higher classification/lower classification*. For purposes of determining whether a classification is higher or lower, classifications under subpart 2 of part D of title I of the CAA are ranked from lowest to highest as follows: Marginal; Moderate; Serious; Severe; and Extreme.

(k) *Initially designated* means the first designation that becomes effective for an area for the 2008 NAAQS and does not include a redesignation to attainment or nonattainment for the 2008 NAAQS.

(l) *Maintenance area* means an area that was designated nonattainment for a specific NAAQS and was redesignated to attainment for that NAAQS subject to a maintenance plan as required by CAA section 175A.

(m) *Nitrogen Oxides (NO_X)* means the sum of nitric oxide and nitrogen dioxide in the flue gas or emission point, collectively expressed as nitrogen dioxide.

(n) *Ozone season* means for each state, the ozone monitoring season as defined in 40 CFR part 58, appendix D, section 4.1(i) for that state.

§ 51.1101 Applicability of part 51.

The provisions in subparts A–X of part 51 apply to areas for purposes of the 2008 NAAQS to the extent they are not inconsistent with the provisions of this subpart.

§ 51.1102 Classification and nonattainment area planning provisions.

An area designated nonattainment for the 2008 ozone NAAQS will be classified in accordance with CAA section 181, as interpreted in § 51.1103(a), and will be subject to the requirements of subpart 2 of part D of title I of the CAA that apply for that classification.

§ 51.1103 Application of classification and attainment date provisions in CAA section 181 of subpart 2 to areas subject to § 51.1102(a).

(a) In accordance with CAA section 181(a)(1), each area designated nonattainment for the 2008 ozone NAAQS shall be classified by operation of law at the time of designation. The classification shall be based on the 8-hour design value for the area at the time of designation, in accordance with Table 1 below. A state may request a higher or lower classification as provided in paragraphs (b) and (c) of this section. For each area classified under this section, the attainment date for the 2008

NAAQS shall be as expeditious as practicable but not later than the date provided in Table 1 as follows:

TABLE 1—CLASSIFICATION FOR 2008 8-HOUR OZONE NAAQS (0.075 PPM) FOR AREAS SUBJECT TO SECTION 51.1102(a)

Area class		8-hour design value (ppm ozone)	Primary standard attainment date (years after designation for 2008 primary NAAQS)
Marginal	from	0.076	3 years after December 31, 2012.
	up to*	0.086	
Moderate	from	0.086	6 years after December 31, 2012.
	up to*	0.100	
Serious	from	0.100	9 years after December 31, 2012.
	up to*	0.113	
Severe-15	from	0.113	15 years after December 31, 2012.
	up to*	0.119	
Severe-17	from	0.119	17 years after December 31, 2012.
	up to*	0.175	
Extreme	equal to or above	0.175	20 years after December 31, 2012.

*But not including.

(b) A state may request, and the Administrator must approve, a higher classification for any reason in accordance with CAA section 181(b)(3).

(c) A state may request, and the Administrator may in the Administrator's discretion approve, a higher or lower classification in accordance with CAA section 181(a)(4).

(d) The following nonattainment areas are reclassified for the 2008 ozone NAAQS as follows: Serious—Ventura County, CA; Severe—Los Angeles-San Bernardino Counties (West Mojave Desert), Riverside County (Coachella Valley), and Sacramento Metro, CA; Extreme—Los Angeles-South Coast Air Basin, and San Joaquin Valley, CA.

APPENDIXES A–K TO PART 51 [RESERVED]

APPENDIX L TO PART 51—EXAMPLE REGULATIONS FOR PREVENTION OF AIR POLLUTION EMERGENCY EPISODES

The example regulations presented herein reflect generally recognized ways of preventing air pollution from reaching levels that would cause imminent and substantial endangerment to the health of persons. States are required under subpart H to have emergency episodes plans but they are not required to adopt the regulations presented herein.

1.0 *Air pollution emergency*. This regulation is designed to prevent the excessive buildup of air pollutants during air pollution episodes, thereby preventing the occurrence of an emergency due to the effects of these pollutants on the health of persons.

1.1 *Episode criteria*. Conditions justifying the proclamation of an air pollution alert, air pollution warning, or air pollution emergency shall be deemed to exist whenever the Director determines that the accumulation of air pollutants in any place is attaining or has attained levels which could, if such levels are sustained or exceeded, lead to a substantial threat to the health of persons. In making this determination, the Director will be guided by the following criteria:

(a) *Air Pollution Forecast:* An internal watch by the Department of Air Pollution Control shall be actuated by a National Weather Service advisory that Atmospheric Stagnation Advisory is in effect or the equivalent local forecast of stagnant atmospheric condition.

(b) *Alert:* The Alert level is that concentration of pollutants at which first stage control actions is to begin. An Alert will be declared when any one of the following levels is reached at any monitoring site:

SO_2—800 μg/m^3 (0.3 p.p.m.), 24-hour average.
PM_{10}—350 μg/m^3, 24-hour average.
CO—17 mg/m^3 (15 p.p.m.), 8-hour average.
Ozone (O_2)=400 μg/m^3 (0.2 ppm)-hour average.
NO_2–1130 μg/m^3 (0.6 p.p.m.), 1-hour average, 282 μg/m^3 (0.15 p.p.m.), 24-hour average.

In addition to the levels listed for the above pollutants, meterological conditions are such that pollutant concentrations can be expected to remain at the above levels for twelve (12) or more hours or increase, or in the case of ozone, the situation is likely to reoccur within the next 24-hours unless control actions are taken.

(c) *Warning:* The warning level indicates that air quality is continuing to degrade and that additional control actions are necessary. A warning will be declared when any one of the following levels is reached at any monitoring site:

SO_2—1,600 μg/m^3 (0.6 p.p.m.), 24-hour average.

PM_{10}—420 μg/m³, 24-hour average.
CO—34 mg/m³ (30 p.p.m.), 8-hour average.
Ozone (O_3)—800 μg/m³ (0.4 p.p.m.), 1-hour average.
NO_2—2,260 μg/m³ (1.2 ppm)—1-hour average; 565 μg/m³ (0.3 ppm), 24-hour average.

In addition to the levels listed for the above pollutants, meterological conditions are such that pollutant concentrations can be expected to remain at the above levels for twelve (12) or more hours or increase, or in the case of ozone, the situation is likely to reoccur within the next 24-hours unless control actions are taken.

(d) *Emergency:* The emergency level indicates that air quality is continuing to degrade toward a level of significant harm to the health of persons and that the most stringent control actions are necessary. An emergency will be declared when any one of the following levels is reached at any monitoring site:

SO_2—2,100 μg/m³ (0.8 p.p.m.), 24-hour average.
PM_{10}—500 μg/m³, 24-hour average.
CO—46 mg/m³ (40 p.p.m.), 8-hour average.
Ozone (O_3)—1,000 μg/m³ (0.5 p.p.m.), 1-hour average.
NO_2–3,000 μg/m³ (1.6 ppm), 1-hour average; 750 μg/m³ (0.4 ppm), 24-hour average.

In addition to the levels listed for the above pollutants, meterological conditions are such that pollutant concentrations can be expected to remain at the above levels for twelve (12) or more hours or increase, or in the case of ozone, the situation is likely to reoccur within the next 24-hours unless control actions are taken.

(e) *Termination:* Once declared, any status reached by application of these criteria will remain in effect until the criteria for that level are no longer met. At such time, the next lower status will be assumed.

1.2 *Emission reduction plans.* (a) Air Pollution Alert—When the Director declares an Air Pollution Alert, any person responsible for the operation of a source of air pollutants as set forth in Table I shall take all Air Pollution Alert actions as required for such source of air pollutants and shall put into effect the preplanned abatement strategy for an Air Pollution Alert.

(b) Air Pollution Warning—When the Director declares an Air Pollution Warning, any person responsible for the operation of a source of air pollutants as set forth in Table II shall take all Air Pollution Warning actions as required for such source of air pollutants and shall put into effect the preplanned abatement strategy for an Air Pollution Warning.

(c) Air Pollution Emergency—When the Director declares an Air Pollution Emergency, any person responsible for the operation of a source of air pollutants as described in Table III shall take all Air Pollution Emergency actions as required for such source of air pollutants and shall put into effect the preplanned abatement strategy for an Air Pollution Emergency.

(d) When the Director determines that a specified criteria level has been reached at one or more monitoring sites solely because of emissions from a limited number of sources, he shall notify such source(s) that the preplanned abatement strategies of Tables I, II, and III or the standby plans are required, insofar as it applies to such source(s), and shall be put into effect until the criteria of the specified level are no longer met.

1.3 *Preplanned abatement strategies,* (a) Any person responsible for the operation of a source of air pollutants as set forth in Tables I–III shall prepare standby plans for reducing the emission of air pollutants during periods of an Air Pollution Alert, Air Pollution Warning, and Air Pollution Emergency. Standby plans shall be designed to reduce or eliminate emissions of air pollutants in accordance with the objectives set forth in Tables I–III which are made a part of this section.

(b) Any person responsible for the operation of a source of air pollutants not set forth under section 1.3(a) shall, when requested by the Director in writing, prepare standby plans for reducing the emission of air pollutants during periods of an Air Pollution Alert, Air Pollution Warning, and Air Pollution Emergency. Standby plans shall be designed to reduce or eliminate emissions of air pollutants in accordance with the objectives set forth in Tables I–III.

(c) Standby plans as required under section 1.3(a) and (b) shall be in writing and identify the sources of air pollutants, the approximate amount of reduction of pollutants and a brief description of the manner in which the reduction will be achieved during an Air Pollution Alert, Air Pollution Warning, and Air Pollution Emergency.

(d) During a condition of Air Pollution Alert, Air Pollution Warning, and Air Pollution Emergency, standby plans as required by this section shall be made available on the premises to any person authorized to enforce the provisions of applicable rules and regulations.

(e) Standby plans as required by this section shall be submitted to the Director upon request within thirty (30) days of the receipt of such request; such standby plans shall be subject to review and approval by the Director. If, in the opinion of the Director, a standby plan does not effectively carry out the objectives as set forth in Table I–III, the Director may disapprove it, state his reason for disapproval and order the preparation of an amended standby plan within the time period specified in the order.

TABLE I—ABATEMENT STRATEGIES EMISSION REDUCTION PLANS ALERT LEVEL

Part A. General

1. There shall be no open burning by any persons of tree waste, vegetation, refuse, or debris in any form.

2. The use of incinerators for the disposal of any form of solid waste shall be limited to the hours between 12 noon and 4 p.m.

3. Persons operating fuel-burning equipment which required boiler lancing or soot blowing shall perform such operations only between the hours of 12 noon and 4 p.m.

4. Persons operating motor vehicles should eliminate all unnecessary operations.

Part B. Source curtailment

Any person responsible for the operation of a source of air pollutants listed below shall take all required control actions for this Alert Level.

Source of air pollution	Control action
1. Coal or oil-fired electric power generating facilities	a. Substantial reduction by utilization of fuels having low ash and sulfur content. b. Maximum utilization of mid-day (12 noon to 4 p.m.) atmospheric turbulence for boiler lancing and soot blowing. c. Substantial reduction by diverting electric power generation to facilities outside of Alert Area.
2. Coal and oil-fired process steam generating facilities	a. Substantial reduction by utilization of fuels having low ash and sulfur content. b. Maximum utilization of mid-day (12 noon to 4 p.m.) atmospheric turbulence for boiler lancing and soot blowing. c. Substantial reduction of steam load demands consistent with continuing plant operations.
3. Manufacturing industries of the following classifications: Primary Metals Industry. Petroleum Refining Operations. Chemical Industries. Mineral Processing Industries. Paper and Allied Products. Grain Industry.	a. Substantial reduction of air pollutants from manufacturing operations by curtailing, postponing, or deferring production and all operations. b. Maximum reduction by deferring trade waste disposal operations which emit solid particles, gas vapors or malodorous substances. c. Maximum reduction of heat load demands for processing. d. Maximum utilization of mid-day (12 noon to 4 p.m.) atmospheric turbulence for boiler lancing and soot blowing.

TABLE II—EMISSION REDUCTION PLANS

WARNING LEVEL

Part A. General

1. There shall be no open burning by any persons of tree waste, vegetation, refuse, or debris in any form.

2. The use of incinerators for the disposal of any form of solid waste or liquid waste shall be prohibited.

3. Persons operating fuel-burning equipment which requires boiler lancing or soot blowing shall perform such operations only between the hours of 12 noon and 4 p.m.

4. Persons operating motor vehicles must reduce operations by the use of car pools and increased use of public transportation and elimination of unnecessary operation.

Part B. Source curtailment

Any person responsible for the operation of a source of air pollutants listed below shall take all required control actions for this Warning Level.

Source of air pollution	Control action
1. Coal or oil-fired process steam generating facilities	a. Maximum reduction by utilization of fuels having lowest ash and sulfur content. b. Maximum utilization of mid-day (12 noon to 4 p.m.) atmospheric turbulence for boiler lancing and soot blowing. c. Maximum reduction by diverting electric power generation to facilities outside of Warning Area.
2. Oil and oil-fired process steam generating facilities	a. Maximum reduction by utilization of fuels having the lowest available ash and sulfur content. b. Maximum utilization of mid-day (12 noon to 4 p.m.) atmospheric turbulence for boiler lancing and soot blowing. c. Making ready for use a plan of action to be taken if an emergency develops.

Source of air pollution	Control action
3. Manufacturing industries which require considerable lead time for shut-down including the following classifications: Petroleum Refining. Chemical Industries. Primary Metals Industries. Glass Industries. Paper and Allied Products.	a. Maximum reduction of air contaminants from manufacturing operations by, if necessary, assuming reasonable economic hardships by postponing production and allied operation. b. Maximum reduction by deferring trade waste disposal operations which emit solid particles, gases, vapors or malodorous substances. c. Maximum reduction of heat load demands for processing. d. Maximum utilization of mid-day (12 noon to 4 p.m.) atmospheric turbulence for boiler lancing or soot blowing.
4. Manufacturing industries require relatively short lead times for shut-down including the following classifications: Primary Metals Industries. Chemical Industries. Mineral Processing Industries. Grain Industry.	a. Elimination of air pollutants from manufacturing operations by ceasing, curtailing, postponing or deferring production and allied operations to the extent possible without causing injury to persons or damage to equipment. b. Elimination of air pollutants from trade waste disposal processes which emit solid particles, gases, vapors or malodorous substances. c. Maximum reduction of heat load demands for processing. d. Maximum utilization of mid-day (12 noon to 4 p.m.) atmospheric turbulence for boiler lancing or soot blowing.

TABLE III—EMISSION REDUCTION PLANS

EMERGENCY LEVEL

Part A. General

1. There shall be no open burning by any persons of tree waste, vegetation, refuse, or debris in any form.

2. The use of incinerators for the disposal of any form of solid or liquid waste shall be prohibited.

3. All places of employment described below shall immediately cease operations.

a. Mining and quarrying of nonmetallic minerals.

b. All construction work except that which must proceed to avoid emergent physical harm.

c. All manufacturing establishments except those required to have in force an air pollution emergency plan.

d. All wholesale trade establishments; i.e., places of business primarily engaged in selling merchandise to retailers, or industrial, commercial, institutional or professional users, or to other wholesalers, or acting as agents in buying merchandise for or selling merchandise to such persons or companies, except those engaged in the distribution of drugs, surgical supplies and food.

e. All offices of local, county and State government including authorities, joint meetings, and other public bodies excepting such agencies which are determined by the chief administrative officer of local, county, or State government, authorities, joint meetings and other public bodies to be vital for public safety and welfare and the enforcement of the provisions of this order.

f. All retail trade establishments except pharmacies, surgical supply distributors, and stores primarily engaged in the sale of food.

g. Banks, credit agencies other than banks, securities and commodities brokers, dealers, exchanges and services; offices of insurance carriers, agents and brokers, real estate offices.

h. Wholesale and retail laundries, laundry services and cleaning and dyeing establishments; photographic studios; beauty shops, barber shops, shoe repair shops.

i. Advertising offices; consumer credit reporting, adjustment and collection agencies; duplicating, addressing, blueprinting; photocopying, mailing, mailing list and stenographic services; equipment rental services, commercial testing laboratories.

j. Automobile repair, automobile services, garages.

k. Establishments rendering amusement and recreational services including motion picture theaters.

l. Elementary and secondary schools, colleges, universities, professional schools, junior colleges, vocational schools, and public and private libraries.

4. All commercial and manufacturing establishments not included in this order will institute such actions as will result in maximum reduction of air pollutants from their operation by ceasing, curtailing, or postponing operations which emit air pollutants to the extent possible without causing injury to persons or damage to equipment.

5. The use of motor vehicles is prohibited except in emergencies with the approval of local or State police.

Part B. Source curtailment

Any person responsible for the operation of a source of air pollutants listed below shall take all required control actions for this Emergency Level.

Source of air pollution	Control action
1. Coal or oil-fired electric power generating facilities	a. Maximum reduction by utilization of fuels having lowest ash and sulfur content. b. Maximum utilization of mid-day (12 noon to 4 p.m.) atmospheric turbulence for boiler lancing or soot blowing. c. Maximum reduction by diverting electric power generation to facilities outside of Emergency Area.
2. Coal and oil-fired process steam generating facilities	a. Maximum reduction by reducing heat and steam demands to absolute necessities consistent with preventing equipment damage. b. Maximum utilization of mid-day (12 noon to 4 p.m.) atmospheric turbulence for boiler lancing and soot blowing. c. Taking the action called for in the emergency plan.
3. Manufacturing industries of the following classifications: Primary Metals Industries. Petroleum Refining. Chemical Industries. Mineral Processing Industries. Grain Industry. Paper and Allied Products.	a. Elimination of air pollutants from manufacturing operations by ceasing, curtailing, postponing or deferring production and allied operations to the extent possible without causing injury to persons or damage to equipment. b. Elimination of air pollutants from trade waste disposal processes which emit solid particles, gases, vapors or malodorous substances. c. Maximum reduction of heat load demands for processing. d. Maximum utilization of mid-day (12 noon to 4 p.m.) atmospheric turbulence for boiler lancing or soot blowing.

(Secs. 110, 301(a), 313, 319, Clean Air Act (42 U.S.C. 7410, 7601(a), 7613, 7619))

[36 FR 22398, Nov. 25, 1971; 36 FR 24002, Dec. 17, 1971, as amended at 37 FR 26312, Dec. 9, 1972; 40 FR 36333, Aug. 20, 1975; 41 FR 35676, Aug. 24, 1976; 44 FR 27570, May 10, 1979; 51 FR 40675, Nov. 7, 1986; 52 FR 24714, July 1, 1987]

APPENDIX M TO PART 51—RECOMMENDED TEST METHODS FOR STATE IMPLEMENTATION PLANS

Method 201—Determination of PM_{10} Emissions (Exhaust Gas Recycle Procedure).
Method 201A—Determination of PM_{10} and $PM_{2.5}$ Emissions From Stationary Sources (Constant Sampling Rate Procedure)
Method 202—Dry Impinger Method for Determining Condensable Particulate Emissions From Stationary Sources
Method 203A—Visual Determination of Opacity of Emissions from Stationary Sources for Time-Averaged Regulations.
Method 203B—Visual Determination of Opacity of Emissions from Stationary Sources for Time-Exception Regulations.
Method 203C—Visual Determination of Opacity of Emissions from Stationary Sources for Instantaneous Regulations.
Method 204—Criteria for and Verification of a Permanent or Temporary Total Enclosure.
Method 204A—Volatile Organic Compounds Content in Liquid Input Stream.
Method 204B—Volatile Organic Compounds Emissions in Captured Stream.
Method 204C—Volatile Organic Compounds Emissions in Captured Stream (Dilution Technique).
Method 204D—Volatile Organic Compounds Emissions in Uncaptured Stream from Temporary Total Enclosure.
Method 204E—Volatile Organic Compounds Emissions in Uncaptured Stream from Building Enclosure.
Method 204F—Volatile Organic Compounds Content in Liquid Input Stream (Distillation Approach).
Method 205—Verification of Gas Dilution Systems for Field Instrument Calibrations
Method 207—Pre-Survey Procedure for Corn Wet-Milling Facility Emission Sources

1.0 Presented herein are recommended test methods for measuring air pollutantemanating from an emission source. They are provided for States to use in their plans to meet the requirements of subpart K—Source Surveillance.

2.0 The State may also choose to adopt other methods to meet the requirements of subpart K of this part, subject to the normal plan review process.

3.0 The State may also meet the requirements of subpart K of this part by adopting, again subject to the normal plan review process, any of the relevant methods in appendix A to 40 CFR part 60.

4.0 *Quality Assurance Procedures*. The performance testing shall include a test method performance audit (PA) during the performance test. The PAs consist of blind audit samples supplied by an accredited audit sample provider and analyzed during the performance test in order to provide a measure of test data bias. Gaseous audit samples are designed to audit the performance of the sampling system as well as the analytical system and must be collected by the sampling system during the compliance test just as the compliance samples are collected. If a liquid or solid audit sample is designed to audit the sampling system, it must also be

collected by the sampling system during the compliance test. If multiple sampling systems or sampling trains are used during the compliance test for any of the test methods, the tester is only required to use one of the sampling systems per method to collect the audit sample. The audit sample must be analyzed by the same analyst using the same analytical reagents and analytical system and at the same time as the compliance samples. Retests are required when there is a failure to produce acceptable results for an audit sample. However, if the audit results do not affect the compliance or noncompliance status of the affected facility, the compliance authority may waive the reanalysis requirement, further audits, or retests and accept the results of the compliance test. Acceptance of the test results shall constitute a waiver of the reanalysis requirement, further audits, or retests. The compliance authority may also use the audit sample failure and the compliance test results as evidence to determine the compliance or noncompliance status of the affected facility. A blind audit sample is a sample whose value is known only to the sample provider and is not revealed to the tested facility until after it reports the measured value of the audit sample. For pollutants that exist in the gas phase at ambient temperature, the audit sample shall consist of an appropriate concentration of the pollutant in air or nitrogen that will be introduced into the sampling system of the test method at or near the same entry point as a sample from the emission source. If no gas phase audit samples are available, an acceptable alternative is a sample of the pollutant in the same matrix that would be produced when the sample is recovered from the sampling system as required by the test method. For samples that exist only in a liquid or solid form at ambient temperature, the audit sample shall consist of an appropriate concentration of the pollutant in the same matrix that would be produced when the sample is recovered from the sampling system as required by the test method. An accredited audit sample provider (AASP) is an organization that has been accredited to prepare audit samples by an independent, third party accrediting body.

a. The source owner, operator, or representative of the tested facility shall obtain an audit sample, if commercially available, from an AASP for each test method used for regulatory compliance purposes. No audit samples are required for the following test methods: Methods 3A and 3C of appendix A–3 of part 60, Methods 6C, 7E, 9, and 10 of appendix A–4 of part 60, Methods 18 and 19 of appendix A–6 of part 60, Methods 20, 22, and 25A of appendix A–7 of part 60, and Methods 303, 318, 320, and 321 of appendix A of part 63 of this chapter. If multiple sources at a single facility are tested during a compliance test event, only one audit sample is required for each method used during a compliance test. The compliance authority responsible for the compliance test may waive the requirement to include an audit sample if they believe that an audit sample is not necessary. ''Commercially available'' means that two or more independent AASPs have blind audit samples available for purchase. If the source owner, operator, or representative cannot find an audit sample for a specific method, the owner, operator, or representative shall consult the EPA Web site at the following URL, *http://www.epa.gov/ttn/emc,* to confirm whether there is a source that can supply an audit sample for that method. If the EPA Web site does not list an available audit sample at least 60 days prior to the beginning of the compliance test, the source owner, operator, or representative shall not be required to include an audit sample as part of the quality assurance program for the compliance test. When ordering an audit sample, the source owner, operator, or representative shall give the sample provider an estimate for the concentration of each pollutant that is emitted by the source or the estimated concentration of each pollutant based on the permitted level and the name, address, and phone number of the compliance authority. The source owner, operator, or representative shall report the results for the audit sample along with a summary of the emission test results for the audited pollutant to the compliance authority and shall report the results of the audit sample to the AASP. The source owner, operator, or representative shall make both reports at the same time and in the same manner or shall report to the compliance authority first and report to the AASP. If the method being audited is a method that allows the samples to be analyzed in the field, and the tester plans to analyze the samples in the field, the tester may analyze the audit samples prior to collecting the emission samples provided a representative of the compliance authority is present at the testing site. The tester may request and the compliance authority may grant a waiver to the requirement that a representative of the compliance authority must be present at the testing site during the field analysis of an audit sample. The source owner, operator, or representative may report the results of the audit sample to the compliance authority and then report the results of the audit sample to the AASP prior to collecting any emission samples. The test protocol and final test report shall document whether an audit sample was ordered and utilized and the pass/fail results as applicable.

b. An AASP shall have and shall prepare, analyze, and report the true value of audit samples in accordance with a written technical criteria document that describes how

audit samples will be prepared and distributed in a manner that will ensure the integrity of the audit sample program. An acceptable technical criteria document shall contain standard operating procedures for all of the following operations:

1. Preparing the sample;

2. Confirming the true concentration of the sample;

3. Defining the acceptance limits for the results from a well qualified tester. This procedure must use well established statistical methods to analyze historical results from well qualified testers. The acceptance limits shall be set so that there is 95 percent confidence that 90 percent of well qualified labs will produce future results that are within the acceptance limit range;

4. Providing the opportunity for the compliance authority to comment on the selected concentration level for an audit sample;

5. Distributing the sample to the user in a manner that guarantees that the true value of the sample is unknown to the user;

6. Recording the measured concentration reported by the user and determining if the measured value is within acceptable limits;

7. Report the results from each audit sample in a timely manner to the compliance authority and to the source owner, operator, or representative by the AASP. The AASP shall make both reports at the same time and in the same manner or shall report to the compliance authority first and then report to the source owner, operator, or representative. The results shall include the name of the facility tested, the date on which the compliance test was conducted, the name of the company performing the sample collection, the name of the company that analyzed the compliance samples including the audit sample, the measured result for the audit sample, and whether the testing company passed or failed the audit. The AASP shall report the true value of the audit sample to the compliance authority. The AASP may report the true value to the source owner, operator, or representative if the AASP's operating plan ensures that no laboratory will receive the same audit sample twice.

8. Evaluating the acceptance limits of samples at least once every two years to determine in consultation with the voluntary consensus standard body if they should be changed;

9. Maintaining a database, accessible to the compliance authorities, of results from the audit that shall include the name of the facility tested, the date on which the compliance test was conducted, the name of the company performing the sample collection, the name of the company that analyzed the compliance samples including the audit sample, the measured result for the audit sample, the true value of the audit sample, the acceptance range for the measured value, and whether the testing company passed or failed the audit.

c. The accrediting body shall have a written technical criteria document that describes how it will ensure that the AASP is operating in accordance with the AASP technical criteria document that describes how audit samples are to be prepared and distributed. This document shall contain standard operating procedures for all of the following operations:

1. Checking audit samples to confirm their true value as reported by the AASP;

2. Performing technical systems audits of the AASP's facilities and operating procedures at least once every 2 years.

3. Providing standards for use by the voluntary consensus standard body to approve the accrediting body that will accredit the audit sample providers.

d. The technical criteria documents for the accredited sample providers and the accrediting body shall be developed through a public process guided by a voluntary consensus standards body (VCSB). The VCSB shall operate in accordance with the procedures and requirements in the Office of Management and Budget *Circular A–119*. A copy of *Circular A–119* is available upon request by writing the Office of Information and Regulatory Affairs, Office of Management and Budget, 725 17th Street, NW., Washington, DC 20503, by calling (202) 395–6880 or by downloading online at *http://standards.gov/standards_gov/a119.cfm*. The VCSB shall approve all accrediting bodies. The Administrator will review all technical criteria documents. If the technical criteria documents do not meet the minimum technical requirements in this Appendix M, paragraphs b. through d., the technical criteria documents are not acceptable and the proposed audit sample program is not capable of producing audit samples of sufficient quality to be used in a compliance test. All acceptable technical criteria documents shall be posted on the EPA Web site at the following URL, *http://www.epa.gov/ttn/emc*.

METHOD 201—DETERMINATION OF PM_{10} EMISSIONS

(EXHAUST GAS RECYCLE PROCEDURE)

1. Applicability and Principle

1.1 Applicability. This method applies to the in-stack measurement of particulate matter (PM) emissions equal to or less than an aerodynamic diameter of nominally 10 μm (PM_{10}) from stationary sources. The EPA recognizes that condensible emissions not collected by an in-stack method are also PM_{10}, and that emissions that contribute to ambient PM_{10} levels are the sum of condensible emissions and emissions measured by an in-stack PM_{10} method, such as this method or Method 201A. Therefore, for establishing

source contributions to ambient levels of PM_{10}, such as for emission inventory purposes, EPA suggests that source PM_{10} measurement include both in-stack PM_{10} and condensible emissions. Condensible missions may be measured by an impinger analysis in combination with this method.

1.2 Principle. A gas sample is isokinetically extracted from the source. An in-stack cyclone is used to separate PM greater than PM_{10}, and an in-stack glass fiber filter is used to collect the PM_{10}. To maintain isokinetic flow rate conditions at the tip of the probe and a constant flow rate through the cyclone, a clean, dried portion of the sample gas at stack temperature is recycled into the nozzle. The particulate mass is determined gravimetrically after removal of uncombined water.

2. Apparatus

NOTE: Method 5 as cited in this method refers to the method in 40 CFR part 60, appendix A.

2.1 Sampling Train. A schematic of the exhaust of the exhaust gas recycle (EGR) train is shown in Figure 1 of this method.

2.1.1 Nozzle with Recycle Attachment. Stainless steel (316 or equivalent) with a sharp tapered leading edge, and recycle attachment welded directly on the side of the nozzle (see schematic in Figure 2 of this method). The angle of the taper shall be on the outside. Use only straight sampling nozzles. ''Gooseneck'' or other nozzle extensions designed to turn the sample gas flow 90°, as in Method 5 are not acceptable. Locate a thermocouple in the recycle attachment to measure the temperature of the recycle gas as shown in Figure 3 of this method. The recycle attachment shall be made of stainless steel and shall be connected to the probe and nozzle with stainless steel fittings. Two nozzle sizes, e.g., 0.125 and 0.160 in., should be available to allow isokinetic sampling to be conducted over a range of flow rates. Calibrate each nozzle as described in Method 5, Section 5.1.

2.1.2 PM_{10} Sizer. Cyclone, meeting the specifications in Section 5.7 of this method.

2.1.3 Filter Holder. 63mm, stainless steel. An Andersen filter, part number SE274, has been found to be acceptable for the in-stack filter.

NOTE: Mention of trade names or specific products does not constitute endorsement by the Environmental Protection Agency.

2.1.4 Pitot Tube. Same as in Method 5, Section 2.1.3. Attach the pitot to the pitot lines with stainless steel fittings and to the cyclone in a configuration similar to that shown in Figure 3 of this method. The pitot lines shall be made of heat resistant material and attached to the probe with stainless steel fittings.

2.1.5 EGR Probe. Stainless steel, 15.9-mm (⅝-in.) ID tubing with a probe liner, stainless steel 9.53-mm (⅜-in.) ID stainless steel recycle tubing, two 6.35-mm (¼-in.) ID stainless steel tubing for the pitot tube extensions, three thermocouple leads, and one power lead, all contained by stainless steel tubing with a diameter of approximately 51 mm (2.0 in.). Design considerations should include minimum weight construction materials sufficient for probe structural strength. Wrap the sample and recycle tubes with a heating tape to heat the sample and recycle gases to stack temperature.

2.1.6 Condenser. Same as in Method 5, Section 2.1.7.

2.1.7 Umbilical Connector. Flexible tubing with thermocouple and power leads of sufficient length to connect probe to meter and flow control console.

2.1.8 Vacuum Pump. Leak-tight, oil-less, noncontaminating, with an absolute filter, ''HEPA'' type, at the pump exit. A Gast Model 0522–V103 G18DX pump has been found to be satisfactory.

2.1.9 Meter and Flow Control Console. System consisting of a dry gas meter and calibrated orifice for measuring sample flow rate and capable of measuring volume to ±2 percent, calibrated laminar flow elements (LFE's) or equivalent for measuring total and sample flow rates, probe heater control, and manometers and magnehelic gauges (as shown in Figures 4 and 5 of this method), or equivalent. Temperatures needed for calculations include stack, recycle, probe, dry gas meter, filter, and total flow. Flow measurements include velocity head (Δp), orifice differential pressure (ΔH), total flow, recycle flow, and total back-pressure through the system.

2.1.10 Barometer. Same as in Method 5, Section 2.1.9.

2.1.11 Rubber Tubing. 6.35-mm (¼-in.) ID flexible rubber tubing.

2.2 Sample Recovery.

2.2.1 Nozzle, Cyclone, and Filter Holder Brushes. Nylon bristle brushes property sized and shaped for cleaning the nozzle, cyclone, filter holder, and probe or probe liner, with stainless steel wire shafts and handles.

2.2.2 Wash Bottles, Glass Sample Storage Containers, Petri Dishes, Graduated Cylinder and Balance, Plastic Storage Containers, and Funnels. Same as Method 5, Sections 2.2.2 through 2.2.6 and 2.2.8, respectively.

2.3 Analysis. Same as in Method 5, Section 2.3.

3. Reagents

The reagents used in sampling, sample recovery, and analysis are the same as that specified in Method 5, Sections 3.1, 3.2, and 3.3, respectively.

4. Procedure

4.1 Sampling. The complexity of this method is such that, in order to obtain reliable results, testers should be trained and experienced with the test procedures.

4.1.1 Pretest Preparation. Same as in Method 5, Section 4.1.1.

4.1.2 Preliminary Determinations. Same as Method 5, Section 4.1.2, except use the directions on nozzle size selection in this section. Use of the EGR method may require a minimum sampling port diameter of 0.2 m (6 in.). Also, the required maximum number of sample traverse points at any location shall be 12.

4.1.2.1 The cyclone and filter holder must be in-stack or at stack temperature during sampling. The blockage effects of the EGR sampling assembly will be minimal if the cross-sectional area of the sampling assembly is 3 percent or less of the cross-sectional area of the duct and a pitot coefficient of 0.84 may be assigned to the pitot. If the cross-sectional area of the assembly is greater than 3 percent of the cross-sectional area of the duct, then either determine the pitot coefficient at sampling conditions or use a standard pitot with a known coefficient in a configuration with the EGR sampling assembly such that flow disturbances are minimized.

4.1.2.2 Construct a setup of pressure drops for various Δp's and temperatures. A computer is useful for these calculations. An example of the output of the EGR setup program is shown in Figure 6 of this method, and directions on its use are in section 4.1.5.2 of this method. Computer programs, written in IBM BASIC computer language, to do these types of setup and reduction calculations for the EGR procedure, are available through the National Technical Information Services (NTIS), Accession number PB90–500000, 5285 Port Royal Road, Springfield, VA 22161.

4.1.2.3 The EGR setup program allows the tester to select the nozzle size based on anticipated average stack conditions and prints a setup sheet for field use. The amount of recycle through the nozzle should be between 10 and 80 percent. Inputs for the EGR setup program are stack temperature (minimum, maximum, and average), stack velocity (minimum, maximum, and average), atmospheric pressure, stack static pressure, meter box temperature, stack moisture, percent 0_2, and percent CO_2 in the stack gas, pitot coefficient (C_p), orifice Δ H_2, flow rate measurement calibration values [slope (m) and y-intercept (b) of the calibration curve], and the number of nozzles available and their diameters.

4.1.2.4 A less rigorous calculation for the setup sheet can be done manually using the equations on the example worksheets in Figures 7, 8, and 9 of this method, or by a Hewlett-Packard HP41 calculator using the program provided in appendix D of the EGR operators manual, entitled *Applications Guide for Source PM_{10} Exhaust Gas Recycle Sampling System.* This calculation uses an approximation of the total flow rate and agrees within 1 percent of the exact solution for pressure drops at stack temperatures from 38 to 260 °C (100 to 500 °F) and stack moisture up to 50 percent. Also, the example worksheets use a constant stack temperature in the calculation, ingoring the complicated temperature dependence from all three pressure drop equations. Errors for this at stack temperatures ±28 °C (±50 °F) of the temperature used in the setup calculations are within 5 percent for flow rate and within 5 percent for cyclone cut size.

4.1.2.5 The pressure upstream of the LFE's is assumed to be constant at 0.6 in. Hg in the EGR setup calculations.

4.1.2.6 The setup sheet constructed using this procedure shall be similar to Figure 6 of this method. Inputs needed for the calculation are the same as for the setup computer except that stack velocities are not needed.

4.1.3 Preparation of Collection Train. Same as in Method 5, Section 4.1.3, except use the following directions to set up the train.

4.1.3.1 Assemble the EGR sampling device, and attach it to probe as shown in Figure 3 of this method. If stack temperatures exceed 260 °C (500 °F), then assemble the EGR cyclone without the O-ring and reduce the vacuum requirement to 130 mm Hg (5.0 in. Hg) in the leak-check procedure in Section 4.1.4.3.2 of this method.

4.1.3.2 Connect the proble directly to the filter holder and condenser as in Method 5. Connect the condenser and probe to the meter and flow control console with the umbilical connector. Plug in the pump and attach pump lines to the meter and flow control console.

4.1.4 Leak-Check Procedure. The leak-check for the EGR Method consists of two parts: the sample-side and the recycle-side. The sample-side leak-check is required at the beginning of the run with the cyclone attached, and after the run with the cyclone removed. The cyclone is removed before the post-test leak-check to prevent any disturbance of the collected sample prior to analysis. The recycle-side leak-check tests the leak tight integrity of the recycle components and is required prior to the first test run and after each shipment.

4.1.4.1 Pretest Leak-Check. A pretest leak-check of the entire sample-side, including the cyclone and nozzle, is required. Use the leak-check procedure in Section 4.1.4.3 of this method to conduct a pretest leak-check.

4.1.4.2 Leak-Checks During Sample Run. Same as in Method 5, Section 4.1.4.1.

4.1.4.3 Post-Test Leak-Check. A leak-check is required at the conclusion of each sampling run. Remove the cyclone before the

leak-check to prevent the vacuum created by the cooling of the probe from disturbing the collected sample and use the following procedure to conduct a post-test leak-check.

4.1.4.3.1 The sample-side leak-check is performed as follows: After removing the cyclone, seal the probe with a leak-tight stopper. Before starting pump, close the coarse total valve and both recycle valves, and open completely the sample back pressure valve and the fine total valve. After turning the pump on, partially open the coarse total valve slowly to prevent a surge in the manometer. Adjust the vacuum to at least 381 mm Hg (15.0 in. Hg) with the fine total valve. If the desired vacuum is exceeded, either leak-check at this higher vacuum or end the leak-check as shown below and start over.

CAUTION: Do not decrease the vacuum with any of the valves. This may cause a rupture of the filter.

NOTE: A lower vacuum may be used, provided that it is not exceeded during the test.

4.1.4.3.2 Leak rates in excess of 0.00057 m^3/min (0.020 ft^3/min) are unacceptable. If the leak rate is too high, void the sampling run.

4.1.4.3.3 To complete the leak-check, slowly remove the stopper from the nozzle until the vacuum is near zero, then immediately turn off the pump. This procedure sequence prevents a pressure surge in the manometer fluid and rupture of the filter.

4.1.4.3.4 The recycle-side leak-check is performed as follows: Close the coarse and fine total valves and sample back pressure valve. Plug the sample inlet at the meter box. Turn on the power and the pump, close the recycle valves, and open the total flow valves. Adjust the total flow fine adjust valve until a vacuum of 25 inches of mercury is achieved. If the desired vacuum is exceeded, either leak-check at this higher vacuum, or end the leak-check and start over. Minimum acceptable leak rates are the same as for the sample-side. If the leak rate is too high, void the sampling run.

4.1.5 EGR Train Operation. Same as in Method 5, Section 4.1.5, except omit references to nomographs and recommendations about changing the filter assembly during a run.

4.1.5.1 Record the data required on a data sheet such as the one shown in Figure 10 of this method. Make periodic checks of the manometer level and zero to ensure correct ΔH and Δp values. An acceptable procedure for checking the zero is to equalize the pressure at both ends of the manometer by pulling off the tubing, allowing the fluid to equilibrate and, if necessary, to re-zero. Maintain the probe temperature to within 11 °C (20 °F) of stack temperature.

4.1.5.2 The procedure for using the example EGR setup sheet is as follows: Obtain a stack velocity reading from the pitot manometer (Δp), and find this value on the ordinate axis of the setup sheet. Find the stack temperature on the abscissa. Where these two values intersect are the differential pressures necessary to achieve isokineticity and 10 μm cut size (interpolation may be necessary).

4.1.5.3 The top three numbers are differential pressures (in. H_2O), and the bottom number is the percent recycle at these flow settings. Adjust the total flow rate valves, coarse and fine, to the sample value (ΔH) on the setup sheet, and the recycle flow rate valves, coarse and fine, to the recycle flow on the setup sheet.

4.1.5.4 For startup of the EGR sample train, the following procedure is recommended. Preheat the cyclone in the stack for 30 minutes. Close both the sample and recycle coarse valves. Open the fine total, fine recycle, and sample back pressure valves halfway. Ensure that the nozzle is properly aligned with the sample stream. After noting the Δp and stack temperature, select the appropriate ΔH and recycle from the EGR setup sheet. Start the pump and timing device simultaneously. Immediately open both the coarse total and the coarse recycle valves slowly to obtain the approximate desired values. Adjust both the fine total and the fine recycle valves to achieve more precisely the desired values. In the EGR flow system, adjustment of either valve will result in a change in both total and recycle flow rates, and a slight iteration between the total and recycle valves may be necessary. Because the sample back pressure valve controls the total flow rate through the system, it may be necessary to adjust this valve in order to obtain the correct flow rate.

NOTE: Isokinetic sampling and proper operation of the cyclone are not achieved unless the correct ΔH and recycle flow rates are maintained.

4.1.5.5 During the test run, monitor the probe and filter temperatures periodically, and make adjustments as necessary to maintain the desired temperatures. If the sample loading is high, the filter may begin to blind or the cyclone may clog. The filter or the cyclone may be replaced during the sample run. Before changing the filter or cyclone, conduct a leak-check (Section 4.1.4.2 of this method). The total particulate mass shall be the sum of all cyclone and the filter catch during the run. Monitor stack temperature and Δp periodically, and make the necessary adjustments in sampling and recycle flow rates to maintain isokinetic sampling and the proper flow rate through the cyclone. At the end of the run, turn off the pump, close the coarse total valve, and record the final dry gas meter reading. Remove the probe from the stack, and conduct a post-test leak-check as outlined in Section 4.1.4.3 of this method.

4.2 Sample Recovery. Allow the probe to cool. When the probe can be safely handled,

wipe off all external PM adhering to the outside of the nozzle, cyclone, and nozzle attachment, and place a cap over the nozzle to prevent losing or gaining PM. Do not cap the nozzle tip tightly while the sampling train is cooling, as this action would create a vacuum in the filter holder. Disconnect the probe from the umbilical connector, and take the probe to the cleanup site. Sample recovery should be conducted in a dry indoor area or, if outside, in an area protected from wind and free of dust. Cap the ends of the impingers and carry them to the cleanup site. Inspect the components of the train prior to and during disassembly to note any abnormal conditions. Disconnect the pitot from the cyclone. Remove the cyclone from the probe. Recover the sample as follows:

4.2.1 *Container Number 1* (Filter). The recovery shall be the same as that for Container Number 1 in Method 5, Section 4.2.

4.2.2 *Container Number 2* (Cyclone or Large PM Catch). The cyclone must be disassembled and the nozzle removed in order to recover the large PM catch. Quantitatively recover the PM from the interior surfaces of the nozzle and the cyclone, excluding the ''turn around'' cup and the interior surfaces of the exit tube. The recovery shall be the same as that for Container Number 2 in Method 5, Section 4.2.

4.2.3 *Container Number 3* (PM_{10}). Quantitatively recover the PM from all of the surfaces from cyclone exit to the front half of the in-stack filter holder, including the ''turn around'' cup and the interior of the exit tube. The recovery shall be the same as that for Container Number 2 in Method 5, Section 4.2.

4.2.4 *Container Number 4* (Silica Gel). Same as that for Container Number 3 in Method 5, Section 4.2.

4.2.5 *Impinger Water*. Same as in Method 5, Section 4.2, under ''Impinger Water.''

4.3 Analysis. Same as in Method 5, Section 4.3, except handle EGR Container Numbers 1 and 2 like Container Number 1 in Method 5, EGR Container Numbers 3, 4, and 5 like Container Number 3 in Method 5, and EGR Container Number 6 like Container Number 3 in Method 5. Use Figure 11 of this method to record the weights of PM collected.

4.4 Quality Control Procedures. Same as in Method 5, Section 4.4.

4.5 PM_{10} Emission Calculation and Acceptability of Results. Use the EGR reduction program or the procedures in section 6 of this method to calculate PM_{10} emissions and the criteria in section 6.7 of this method to determine the acceptability of the results.

5. Calibration

Maintain an accurate laboratory log of all calibrations.

5.1 Probe Nozzle. Same as in Method 5, Section 5.1.

5.2 Pitot Tube. Same as in Method 5, Section 5.2.

5.3 Meter and Flow Control Console.

5.3.1 Dry Gas Meter. Same as in Method 5, Section 5.3.

5.3.2 LFE Gauges. Calibrate the recycle, total, and inlet total LFE gauges with a manometer. Read and record flow rates at 10, 50, and 90 percent of full scale on the total and recycle pressure gauges. Read and record flow rates at 10, 20, and 30 percent of full scale on the inlet total LFE pressure gauge. Record the total and recycle readings to the nearest 0.3 mm (0.01 in.). Record the inlet total LFE readings to the nearest 3 mm (0.1 in.). Make three separate measurements at each setting and calculate the average. The maximum difference between the average pressure reading and the average manometer reading shall not exceed 1 mm (0.05 in.). If the differences exceed the limit specified, adjust or replace the pressure gauge. After each field use, check the calibration of the pressure gauges.

5.3.3 Total LFE. Same as the metering system in Method 5, Section 5.3.

5.3.4 Recycle LFE. Same as the metering system in Method 5, Section 5.3, except completely close both the coarse and fine recycle valves.

5.4 Probe Heater. Connect the probe to the meter and flow control console with the umbilical connector. Insert a thermocouple into the probe sample line approximately half the length of the probe sample line. Calibrate the probe heater at 66 °C (150 °F), 121 °C (250 °F), and 177 °C (350 °F). Turn on the power, and set the probe heater to the specified temperature. Allow the heater to equilibrate, and record the thermocouple temperature and the meter and flow control console temperature to the nearest 0.5 °C (1 °F). The two temperatures should agree within 5.5 °C (10 °F). If this agreement is not met, adjust or replace the probe heater controller.

5.5 Temperature Gauges. Connect all thermocouples, and let the meter and flow control console equilibrate to ambient temperature. All thermocouples shall agree to within 1.1 °C (2.0 °F) with a standard mercury-in-glass thermometer. Replace defective thermocouples.

5.6 Barometer. Calibrate against a standard mercury-in-glass barometer.

5.7 Probe Cyclone and Nozzle Combinations. The probe cyclone and nozzle combinations need not be calibrated if the cyclone meets the design specifications in Figure 12 of this method and the nozzle meets the design specifications in appendix B of the *Application Guide for the Source* $PM^3{}_{10}$ *Exhaust Gas Recycle Sampling System*, EPA/600/3–88–058. This document may be obtained from Roy Huntley at (919) 541–1060. If the nozzles do not meet the design specifications, then test the cyclone and nozzle combination for conformity with the performance specifications

(PS's) in Table 1 of this method. The purpose of the PS tests is to determine if the cyclone's sharpness of cut meets minimum performance criteria. If the cyclone does not meet design specifications, then, in addition to the cyclone and nozzle combination conforming to the PS's, calibrate the cyclone and determine the relationship between flow rate, gas viscosity, and gas density. Use the procedures in Section 5.7.5 of this method to conduct PS tests and the procedures in Section 5.8 of this method to calibrate the cyclone. Conduct the PS tests in a wind tunnel described in Section 5.7.1 of this method and using a particle generation system described in Section 5.7.2 of this method. Use five particle sizes and three wind velocities as listed in Table 2 of this method. Perform a minimum of three replicate measurements of collection efficiency for each of the 15 conditions listed, for a minimum of 45 measurements.

5.7.1 Wind Tunnel. Perform calibration and PS tests in a wind tunnel (or equivalent test apparatus) capable of establishing and maintaining the required gas stream velocities within 10 percent.

5.7.2 Particle Generation System. The particle generation system shall be capable of producing solid monodispersed dye particles with the mass median aerodynamic diameters specified in Table 2 of this method. The particle size distribution verification should be performed on an integrated sample obtained during the sampling period of each test. An acceptable alternative is to verify the size distribution of samples obtained before and after each test, with both samples required to meet the diameter and monodispersity requirements for an acceptable test run.

5.7.2.1 Establish the size of the solid dye particles delivered to the test section of the wind tunnel using the operating parameters of the particle generation system, and verify the size during the tests by microscopic examination of samples of the particles collected on a membrane filter. The particle size, as established by the operating parameters of the generation system, shall be within the tolerance specified in Table 2 of this method. The precision of the particle size verification technique shall be at least ±0.5 µm, and the particle size determined by the verification technique shall not differ by more than 10 percent from that established by the operating parameters of the particle generation system.

5.7.2.2 Certify the monodispersity of the particles for each test either by microscopic inspection of collected particles on filters or by other suitable monitoring techniques such as an optical particle counter followed by a multichannel pulse height analyzer. If the proportion of multiplets and satellites in an aerosol exceeds 10 percent by mass, the particle generation system is unacceptable for purposes of this test. Multiplets are particles that are agglomerated, and satellites are particles that are smaller than the specified size range.

5.7.3 Schematic Drawings. Schematic drawings of the wind tunnel and blower system and other information showing complete procedural details of the test atmosphere generation, verification, and delivery techniques shall be furnished with calibration data to the reviewing agency.

5.7.4 Flow Rate Measurement. Determine the cyclone flow rates with a dry gas meter and a stopwatch, or a calibrated orifice system capable of measuring flow rates to within 2 percent.

5.7.5 Performance Specification Procedure. Establish the test particle generator operation and verify the particle size microscopically. If mondispersity is to be verified by measurements at the beginning and the end of the run rather than by an integrated sample, these measurements may be made at this time.

5.7.5.1 The cyclone cut size (D_{50}) is defined as the aerodynamic diameter of a particle having a 50 percent probability of penetration. Determine the required cyclone flow rate at which D_{50} is 10 µm. A suggested procedure is to vary the cyclone flow rate while keeping a constant particle size of 10 µm. Measure the PM collected in the cyclone (m_c), exit tube (m_t), and filter (m_f). Compute the cyclone efficiency (E_c) as follows:

$$E_c = \frac{m_c}{\left(m_c + m_t + m_f\right)} \times 100$$

5.7.5.2 Perform three replicates and calculate the average cyclone efficiency as follows:

$$E_{avg} = \frac{\left(E_1 + E_2 + E_3\right)}{3}$$

where E_1, E_2, and E_3 are replicate measurements of E_c.

5.7.5.3 Calculate the standard deviation (σ) for the replicate measurements of E_c as follows:

$$\sigma = \left[\frac{\left(E_1^2 + E_2^2 + E_3^2\right) - \frac{\left(E_1 + E_2 + E_3\right)^2}{3}}{2} \right]^{\frac{1}{2}}$$

if σ exceeds 0.10, repeat the replicate runs.

5.7.5.4 Using the cyclone flow rate that produces D_{50} for 10 μm, measure the overall efficiency of the cyclone and nozzle, E_o, at the particle sizes and nominal gas velocities in Table 2 of this method using this following procedure.

5.7.5.5 Set the air velocity in the wind tunnel to one of the nominal gas velocities from Table 2 of this method. Establish isokinetic sampling conditions and the correct flow rate through the sampler (cyclone and nozzle) using recycle capacity so that the D_{50} is 10 μm. Sample long enough to obtain ±5 percent precision on the total collected mass as determined by the precision and the sensitivity of the measuring technique. Determine separately the nozzle catch (m_n), cyclone catch (m_c), cyclone exit tube catch (m_t), and collection filter catch (m_f).

5.7.5.6 Calculate the overall efficiency (E_o) as follows:

$$E_o = \frac{\left(m_n + m_c\right)}{\left(m_n + m_c + m_t + m_f\right)} \times 100$$

5.7.5.7 Do three replicates for each combination of gas velocities and particle sizes in Table 2 of this method. Calculate E_o for each particle size following the procedures described in this section for determining efficiency. Calculate the standard deviation (σ) for the replicate measurements. If σ exceeds 0.10, repeat the replicate runs.

5.7.6 Criteria for Acceptance. For each of the three gas stream velocities, plot the average E_o as a function of particle size on Figure 13 of this method. Draw a smooth curve for each velocity through all particle sizes. The curve shall be within the banded region for all sizes, and the average E_c for a D_{50} for 10 μm shall be 50 ±0.5 percent.

5.8 Cyclone Calibration Procedure. The purpose of this section is to develop the relationship between flow rate, gas viscosity, gas density, and D_{50}. This procedure only needs to be done on those cyclones that do not meet the design specifications in Figure 12 of this method.

5.8.1 Calculate cyclone flow rate. Determine the flow rates and D_{50}'s for three different particle sizes between 5 μm and 15 μm, one of which shall be 10 μm. All sizes must be within 0.5 μm. For each size, use a different temperature within 60 °C (108 °F) of the temperature at which the cyclone is to be used and conduct triplicate runs. A suggested procedure is to keep the particle size constant and vary the flow rate. Some of the values obtained in the PS tests in Section 5.7.5 may be used.

5.8.1.1 On log-log graph paper, plot the Reynolds number (Re) on the abscissa, and the square root of the Stokes 50 number [$(STK_{50})^{1/2}$] on the ordinate for each temperature. Use the following equations:

$$Re = \frac{4\rho Q_{cyc}}{d_{cyc}\pi\mu_{cyc}}$$

$$\left(Stk_{50}\right)^{\frac{1}{2}} = \left[\frac{4Q_{cyc}\left(D_{50}\right)^2}{9\pi\,\mu_{cyc}\left(d_{cyc}\right)^3} \right]^{\frac{1}{2}}$$

where:

Q_{cyc} = Cyclone flow rate cm^3/sec.
ρ = Gas density, g/cm^3.
d_{cyc} = Diameter of cyclone inlet, cm.
μ_{cyc} = Viscosity of gas through the cyclone, poise.
D_{50} = Cyclone cut size, cm.

5.8.1.2 Use a linear regression analysis to determine the slope (m), and the y-intercept (b). Use the following formula to determine Q, the cyclone flow rate required for a cut size of 10 μm.

$$Q = \frac{\pi\mu_{cyc}}{4}\left[(3000)\left(K_1\right)^b\right] - (0.5 - m)\left[\frac{T_s}{M_c P_s}\right] m/(m - 0.5)^{(m-1.5)/(m-0.5)}$$

where:

Q = Cyclone flow rate for a cut size of 10 μm, cm^3/sec.

T_s = Stack gas temperature, °K,

d = Diameter of nozzle, cm.

$K_1 = 4.077\times10^{-3}$.

5.8.2. Directions for Using Q. Refer to Section 5 of the EGR operators manual for directions in using this expression for Q in the setup calculations.

6. Calculations

6.1 The EGR data reduction calculations are performed by the EGR reduction computer program, which is written in IBM BASIC computer language and is available through NTIS, Accession number PB90-500000, 5285 Port Royal Road, Springfield, Virginia 22161. Examples of program inputs and outputs are shown in Figure 14 of this method.

6.1.1 Calculations can also be done manually, as specified in Method 5, Sections 6.3 through 6.7, and 6.9 through 6.12, with the addition of the following:

6.1.2 Nomenclature.

B_c = Moisture fraction of mixed cyclone gas, by volume, dimensionless.

C_1 = Viscosity constant, 51.12 micropoise for °K (51.05 micropoise for ° R).

C_2 = Viscosity constant, 0.372 micropoise/°K (0.207 micropoise/° R).

C_3 = Viscosity constant, 1.05×10^{-4} micropoise/°K^2 (3.24×10^{-5} micropoise/° R^2).

C_4 = Viscosity constant, 53.147 micropoise/fraction O_2.

C_5 = Viscosity constant, 74.143 micropoise/fraction H_2O.

D_{50} = Diameter of particles having a 50 percent probability of penetration, μm.

f_{02} = Stack gas fraction O_2 by volume, dry basis.

K_1 = 0.3858 °K/mm Hg (17.64 ° R/in. Hg).

M_c = Wet molecular weight of mixed gas through the PM_{10} cyclone, g/g-mole (lb/lb-mole).

M_d = Dry molecular weight of stack gas, g/g-mole (lb/lb-mole).

P_{bar} = Barometer pressure at sampling site, mm Hg (in. Hg).

P_{in1} = Gauge pressure at inlet to total LFE, mm H_2O (in. H_2O).

P_3 = Absolute stack pressure, mm Hg (in. Hg).

Q_2 = Total cyclone flow rate at wet cyclone conditions, m^3/min (ft^3/min).

$Q_{s(std)}$ = Total cyclone flow rate at standard conditons, dscm/min (dscf/min).

T_m = Average temperature of dry gas meter, °K (°R).

T_s = Average stack gas temperature, °K (°R).

$V_{w(std)}$ = Volume of water vapor in gas sample (standard conditions), scm (scf).

X_T = Total LFE linear calibration constant, m^3/[(min)(mm H_2O]) { ft^3/[(min)(in. H_2O)]}.

Y_T = Total LFE linear calibration constant, dscm/min (dscf/min).

ΔP_T = Pressure differential across total LFE, mm H_2O, (in. H_2O).

θ = Total sampling time, min.

μ_{cyc} = Viscosity of mixed cyclone gas, micropoise.

μ_{LFE} = Viscosity of gas laminar flow elements, micropoise.

μ_{std} = Viscosity of standard air, 180.1 micropoise.

6.2 PM_{10} Particulate Weight. Determine the weight of PM_{10} by summing the weights obtained from Container Numbers 1 and 3, less the acetone blank.

6.3 Total Particulate Weight. Determine the particulate catch for PM greater than PM_{10} from the weight obtained from Container Number 2 less the acetone blank, and add it to the PM_{10} particulate weight.

6.4 PM_{10} Fraction. Determine the PM_{10} fraction of the total particulate weight by dividing the PM_{10} particulate weight by the total particulate weight.

6.5 Total Cyclone Flow Rate. The average flow rate at standard conditions is determined from the average pressure drop across the total LFE and is calculated as follows:

$$Q_{s(std)} = K_1\left[X_T \Delta P \frac{\mu_{std}}{\mu_{LFE}} + Y_T\right]\frac{P_{bar} + P_{inl}/13.6}{T_m}$$

The flow rate, at actual cyclone conditions, is calculated as follows:

$$Q_s = \frac{T_s}{K_1 P_s}\left[Q_{s(std)} + \frac{V_{m(std)}}{\theta}\right]$$

The flow rate, at actual cyclone conditions, is calculated as follows:

$$Q_s = \frac{T_s}{K_1 P_s}\left[Q_{s(std)} + \frac{V_{m(std)}}{\theta}\right]$$

6.6 Aerodynamic Cut Size. Use the following procedure to determine the aerodynamic cut size (D_{50}).

6.6.1 Determine the water fraction of the mixed gas through the cyclone by using the equation below.

$$B_c = \frac{V_{w(std)}}{Q_{s(std)}\theta + V_{w(std)}}$$

6.6.2 Calculate the cyclone gas viscosity as follows:

$\mu_{cyc} = C_1 + C_2\ T_s + C_3\ T_s2 + C_4\ f_{02} - C_5\ B_c$

6.6.3 Calculate the molecular weight on a wet basis of the cyclone gas as follows:

$M_c = M_d(1 - B_c) + 18.0(B_c)$

6.6.4 If the cyclone meets the design specification in Figure 12 of this method, calculate the actual D_{50} of the cyclone for the run as follows:

$$D_{50} = \beta_1 \left[\frac{T_s}{M_c P_s}\right] \underline{0.2.091} \left[\frac{\mu_{cyc}}{Q_s}\right] \underline{0.7091}$$

where $\beta_1 = 0.1562$.

6.6.5 If the cyclone does not meet the design specifications in Figure 12 of this method, then use the following equation to calculate D_{50}.

$$D_{50} = (3)\ (10)^b \left(7.376 \times 10^{-4}\right)^m \left[\frac{M_c P_s}{T_s}\right] \left[\frac{4 Q_s}{\pi \mu_{cyc}}\right] d^{(1.5-m)}$$

where:

m = Slope of the calibration curve obtained in Section 5.8.2.

b = y-intercept of the calibration curve obtained in Section 5.8.2.

6.7 Acceptable Results. Acceptability of anisokinetic variation is the same as Method 5, Section 6.12.

6.7.1 If 9.0 μm $\leq D_{50} \leq$ 11 μm and 90 $\leq I \leq$ 110, the results are acceptable. If D_{50} is greater than 11 μm, the Administrator may accept the results. If D_{50} is less than 9.0 μm, reject the results and repeat the test.

7. Bibliography

1. Same as Bibliography in Method 5.

2. McCain, J.D., J.W. Ragland, and A.D. Williamson. Recommended Methodology for the Determination of Particles Size Distributions in Ducted Sources, Final Report. Prepared for the California Air Resources Board by Southern Research Institute. May 1986.

3. Farthing, W.E., S.S. Dawes, A.D. Williamson, J.D. McCain, R.S. Martin, and J.W. Ragland. Development of Sampling Methods for Source PM–10 Emissions. Southern Research Institute for the Environmental Protection Agency. April 1989.

4. *Application Guide for the Source PM_{10} Exhaust Gas Recycle Sampling System*, EPA/600/3–88–058.

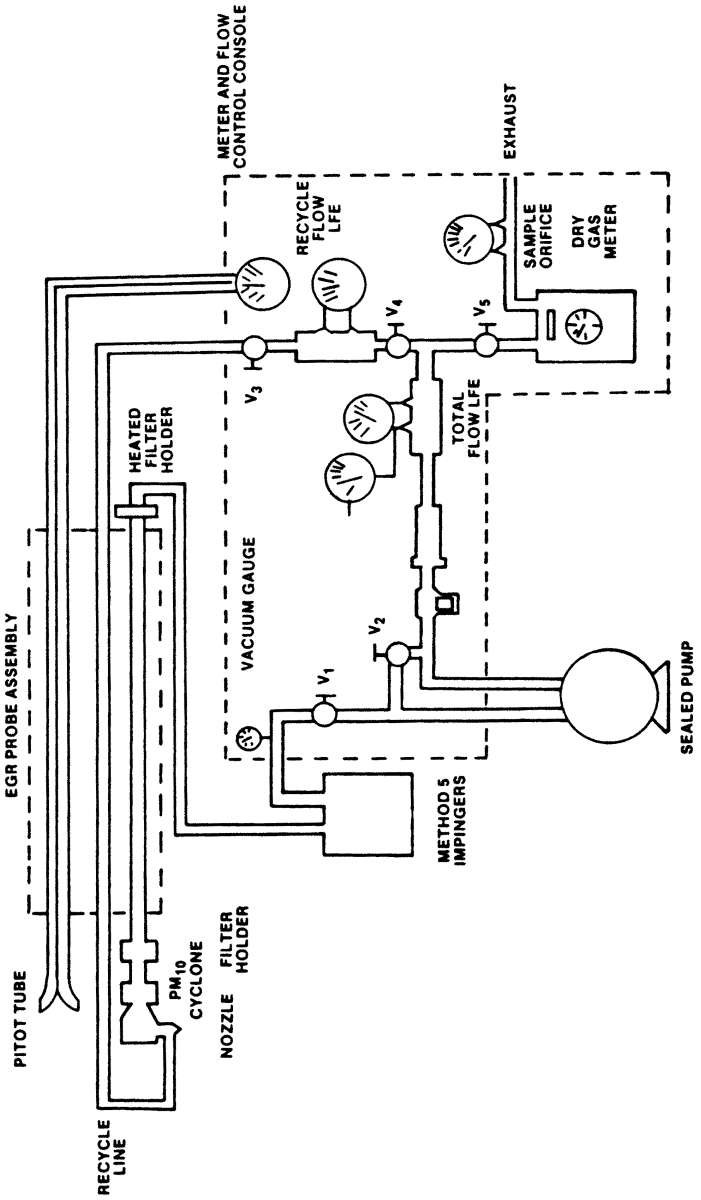

Figure 1. Schematic of the exhaust gas recycle train.

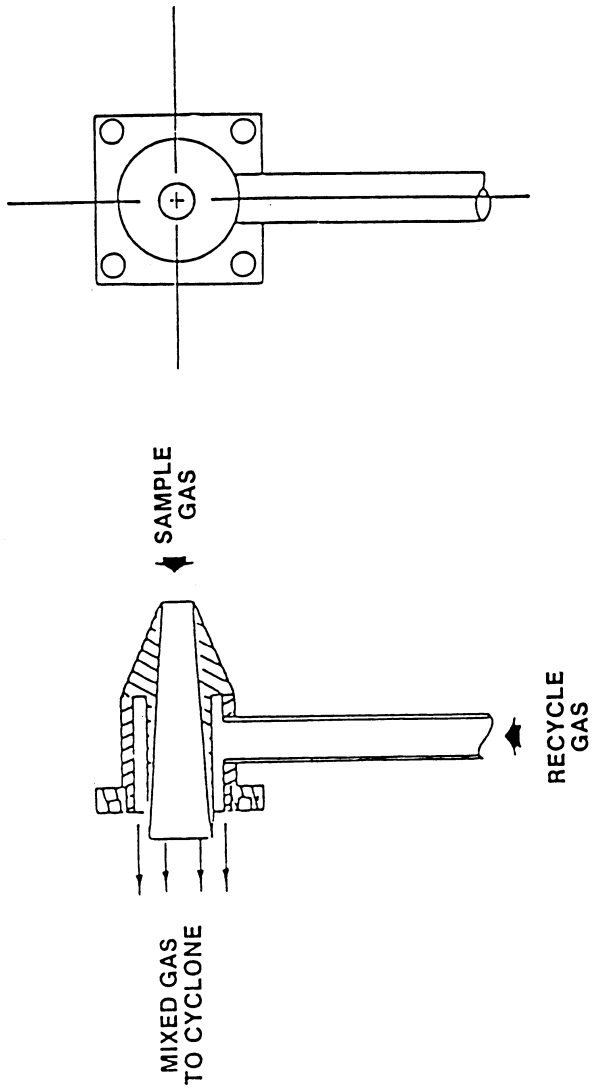

Figure 2. Schematic of EGR nozzle assembly.

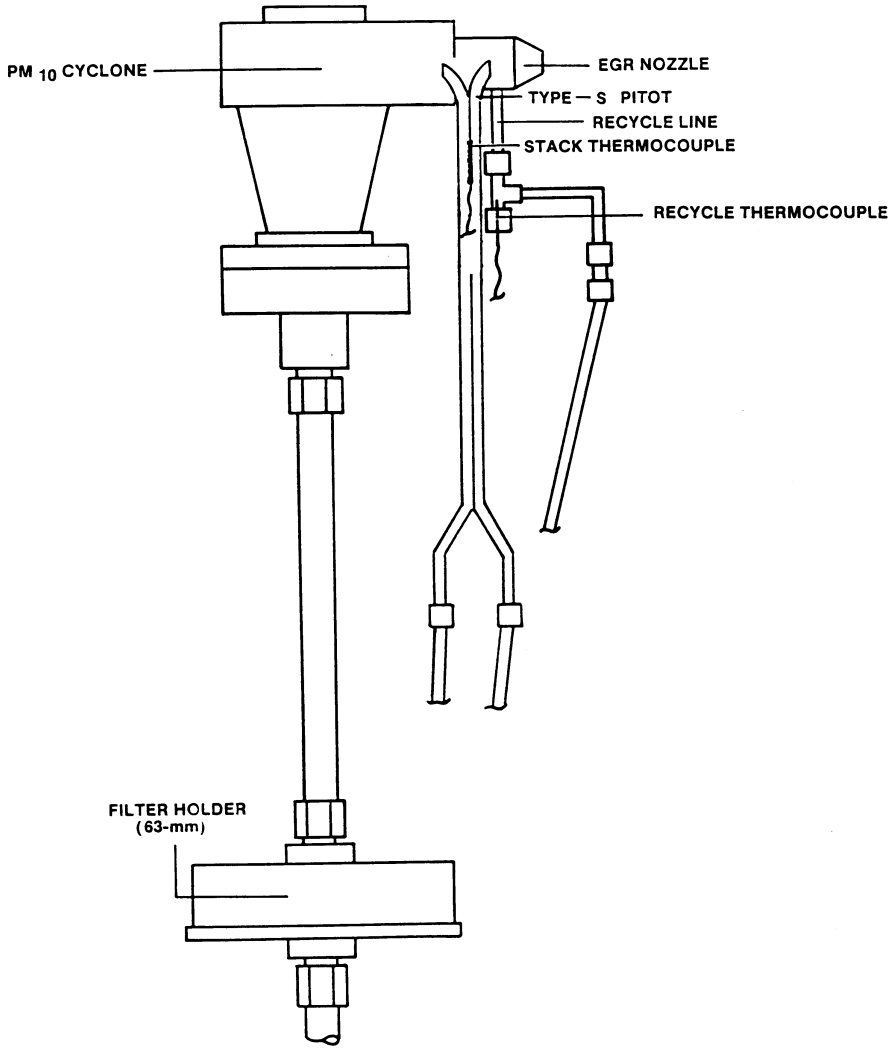

Figure 3. EGR PM_{10} cyclone sampling device.

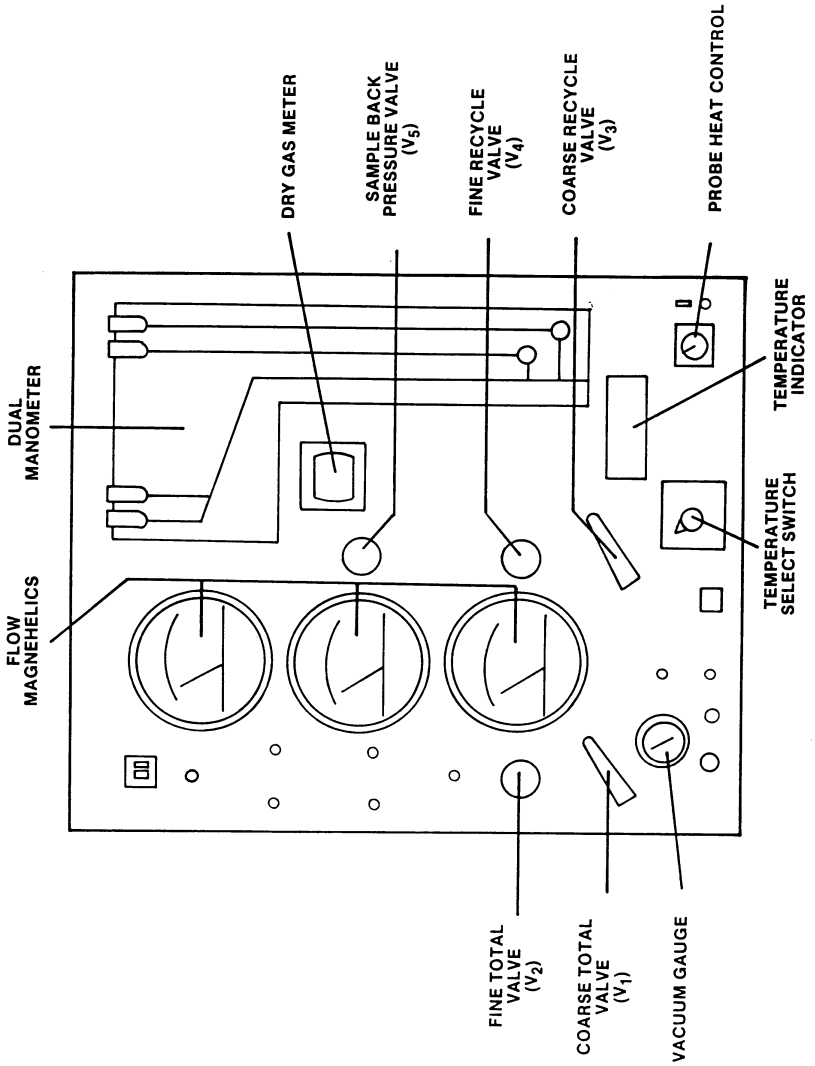

Figure 4. Example EGR control module (front view) showing principle components.

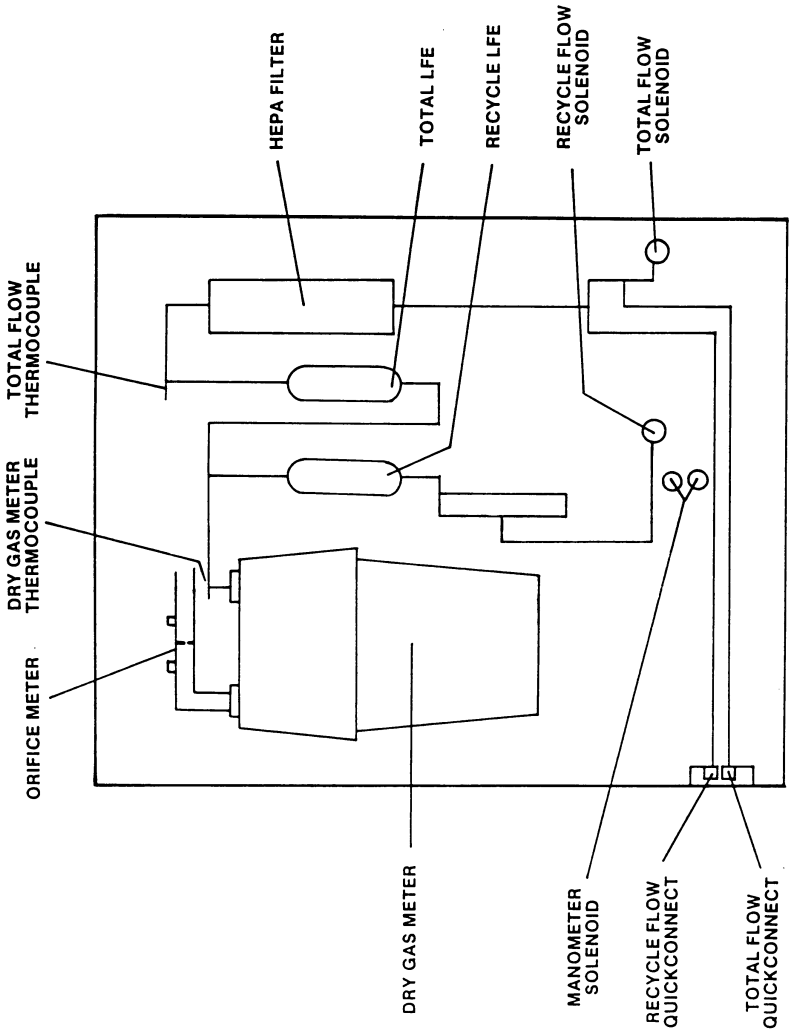

Figure 5. Example EGR control module (rear view) showing principle components.

EXAMPLE EMISSION GAS RECYCLE SETUP SHEET

VERSION 3.1 MAY 1986

TEST I.D.: SAMPLE SETUP
RUN DATE: 11/24/86
LOCATION: SOURCE SIM
OPERATOR(S): RH JB
NOZZLE DIAMETER (IN): .25
STACK CONDITIONS:
AVERAGE TEMPERATURE (F): 200.0
AVERAGE VELOCITY (FT/SEC): 15.0
AMBIENT PRESSURE (IN HG): 29.92
STACK PRESSURE (IN H_{20}): .10
GAS COMPOSITION:
H_{20}=10.0%.....MD=28.84
O_2=20.9% .....MW=27.75
CO_2=.0%.....(LB/LB MOLE)

TARGET PRESSURE DROPS

TEMPERATURE (F)

DP(PTO) ..	150	161	172	183	194	206	217	228
0.026	SAMPLE	.49	.49	.48	.47	.46	.45	.45

	TOTAL	1.90	1.90	1.91	1.92	1.92	1.92	1.93
	RECYCLE	2.89	2.92	2.94	2.97	3.00	3.02	3.05
	% RCL	61%	61%	62%	62%	63%	63%	63%
.031	.58	.56	.55	.55	.55	.54	.53	.52
	1.88	1.89	1.89	1.90	1.91	1.91	1.91	1.92
	2.71	2.74	2.77	2.80	2.82	2.85	2.88	2.90
	57%	57%	58%	58%	59%	59%	60%	60%
.035	.67	.65	.64	.63	.62	.61	.670	.59
	1.88	1.88	1.89	1.89	1.90	1.90	1.91	1.91
	2.57	2.60	2.63	2.66	2.69	2.72	2.74	2.74
	54%	55%	55%	56%	56%	57%	57%	57%
.039	.75	.74	.72	.71	.70	.69	.67	.66
	1.87	1.88	1.88	1.89	1.89	1.90	1.90	1.91
	2.44	2.47	2.50	2.53	2.56	2.59	2.62	2.65
	51%	52%	52%	53%	53%	54%	54%	55%

Figure 6. Example EGR setup sheet.

Barometric pressure, P_{bar}, in. Hg. = _____

Stack static pressure, P_g, in. H_2 O. = _____

Average stack temperature, t_s, °F. = _____

Meter temperature, t_m, °F. = _____

Gas analysis:

$\%CO_2$ ..... = _____

$\%O_2$ ..... = _____

$\%N_2+\%CO$ ..... = _____

Fraction moisture content, B_{ws}. = _____

Calibration data:

Nozzle diameter, D_n in. = _____

Pitot coefficient, C_p. = _____

ΔH_2, in. H_2O ..... = _____

Molecular weight of stack gas, dry basis:

$M_d=0.44$ $(\%CO_2)+0.32$ $(\%O_2)+0.28$ $(\%N_2+\%CO)$ = _____ lb/lb mole

Molecular weight of stack gas, wet basis:

$M_w=M_d\ (1-B_{ws})+18B_{ws}$. = _____ lb/lb mole

Absolute stack pressure:

$P_s=P_{bar}+(P_g/13.6)$ = _____ in. Hg

$$K = 846.72\ D_n^{\ 4}\ \Delta H_@\ C_p^{\ 2}\ \left(1\text{-}B_{ws}\right)^2 \frac{M_d\left(t_m+460\right)P_s}{M_w\left(t_s+460\right)P_{bar}} = ____$$

Desired meter orifice pressure (ΔH) for velocity head of stack gas (Δp):

$$\Delta H = K\ \Delta p = ____\ \text{in. } H_2O$$

Figure 7. Example worksheet 1, meter orifice pressure head calculation.

Barometric pressure, P_{bar}, in. Hg. = _____

Absolute stack pressure, P_s, in. Hg. = _____

Average stack temperature, T_s, °R. = _____

Meter temperature, T_m, °R. = _____

Molecular weight of stack gas, wet basis, M_d lb/lb mole. = _____

Pressure upstream of LFE, in. Hg. = 0.6

Gas analysis:

$\%O_2$ ..... = _____

Fraction moisture content, B_{ws}. = _____

Calibration data:

Nozzle diameter, D_n, in. = _____

Pitot coefficient, C_p ... = _____

Total LFE calibration constant, X_t. = _____

Total LFE calibration constant, T_t. = _____

Absolute pressure upstream of LFE:

$P_{LFE}=P_{bar}+0.6$ ..... = _____ in. Hg

Viscosity of gas in total LFE:

$\mu_{LFE}=152.418+0.2552\ T_m+3.2355\times10^{-5}\ T_m2+0.53147\ (\%O_2)$. = _____

Viscosity of dry stack gas:
μ_d=152.418+0.2552 T_s+3.2355×10^{-5} T_s2+0.53147 (%O_2). = _____

Constants:

$$K_1 = 1.5752 \times 10^{-5} \frac{\mu_{LFE} T_m P_s^{0.7051} \mu_d}{P_{LFE} M_d^{0.2949} T_s^{0.07051}} = ____$$

$$K_2 = 0.1539 \frac{\mu_{LFE} T_m D_n^2 C_p}{P_{LFE}} \left[\frac{P_s}{T_s} \right]^{\frac{1}{2}}$$

$$K_3 = \frac{B_{ws} \mu_d \left[1 - 0.2949 \left(1 - 18 / M_d \right) \right] + 74.143 B_{ws} \left(1 - B_{ws} \right)}{\mu_d - 74.143 B_{ws}} = ____$$

$$A_1 = \frac{K_1}{X_t} - \frac{\mu_{LFE} Y_t}{180.1 X_t} = ____$$

$$B_1 = \frac{K_2 K_3}{\left(M_w \right)^{\frac{1}{2}} X_t} = ____$$

Total LFE pressure head:

$$\Delta p_t = A_1 - B_1 (\Delta p)^{\frac{1}{2}} = ____ \text{ in. } H_2O$$

Figure 8. Example worksheet 1, meter orifice pressure head calculation.

Barometric pressure, P_{bar}, in. Hg. = _____
Absolute stack pressure, P_s, in. Hg. = _____
Average stack temperature, T_s, °R. = _____
Meter temperature, T_m, °R. = _____
Molecular weight of stack gas, dry basis, M_d lb/lb mole. = _____
Viscosity of LFE gasμ_{LFE},poise. = _____
Absolute pressure upstream of LFE, P_{PLE}in. Hg. = _____
Calibration data:.
Nozzle diameter, D_n, in. = _____
Pitot coefficient, C_p ... = _____
Recycle LFE calibration constant, X_t = _____
Recycle LFE calibration constant, Y_t = _____

$$K_1 = 1.5752 \times 10^{-5} \frac{\mu_{LFE} T_m P_s^{0.7051} \mu_d}{P_{LFE} M_d^{0.2949} T_s^{0.7051}} = ____$$

$$K_2 = 0.1539 \frac{M_{LFE} T_m D_n^2 \ C_p}{P_{LFE}} \left[\frac{P_s}{T_s} \right]^{\frac{1}{2}}$$

$$K_4 = \frac{\mu_d}{M_W^{0.2051} \ M_d^{0.2949} \left(\mu_d - 74.143 \ B_{ws} \right)} = _____$$

$$A_2 = \frac{K_1}{X_r} - \frac{\mu_{LFE}\ Y_r}{180.1\ X_r} = _____$$

$$B_2 = \frac{K_4 K_2}{X_r} = _____$$

Pressure head for recycle LFE:

$$\Delta P_r = A_2 - B_2(\Delta p)^{\frac{1}{2}} = _____ \text{ in. } H_2O$$

Figure 9. Example worksheet 3, recycle LFE pressure head.

Run Code		Date				Stack Temperature (°F)																	
Sampler ID		Start Time				Stack Static Pressure (in. H_2O)																	
Filter ID		End Time				Ambient Temperature (°F)																	
Sampler Orientation		Sampling Duration (min)				Ambient Pressure (in. Hg)																	
Sampling Location		DGM (initial)				Gas Velocity																	
Nozzle Diameter-ID (in.)		DGM (final)				System, Leak Check (≥ 15 in. Hg)																	
Operator (s)		Sample Volume (ft^3)																					
Dual Manometer Leveled and Zeroed?																							
Magnehelics Zeroed?																							
Run Time	Port No. / Trav. Pt.	ΔP Pitot	ΔH Sample	DGM Volume	ΔP Total	P Inlet	ΔP Recycle	T_1 Stack	T_2 Recycle	T_3 Probe	T_4 LFE	T_5 DGM	Gas Composition % CO_2	% O_2	% CO	Pitot Leak Check (Pos)	(Neg)	Notes					
													Moisture Content										

Figure 10. Example EGR Procedure data sheet.

Plant _____
Date _____
Run no. _____
Filter no. _____
Amount liquid lost during transport _____

Acetone blank volume, ml _____
Acetone wash volume, ml (2)———(3) _____
Acetone blank conc., mg/mg (Equation 5–4, Method 5) _____

Acetone wash blank, mg (Equation 5–5, Method 5) _____

Container number	Weight of particulate matter, mg		
	Final weight	Tare weight	Weight gain
1	.....	.....	.....
3	.....	.....	.....
Total	.....	.....	.....
Less acetone blank	.....	.....	.....

Container number	Weight of particulate matter, mg		
	Final weight	Tare weight	Weight gain
Weight of PM_{10}	.....	.....	.....
2	.....	.....	.....
Less acetone blank	.....	.....	.....
Total particulate weight	.....	.....	.....

Figure 11. EGR method analysis sheet.

Cyclone Interior Dimensions

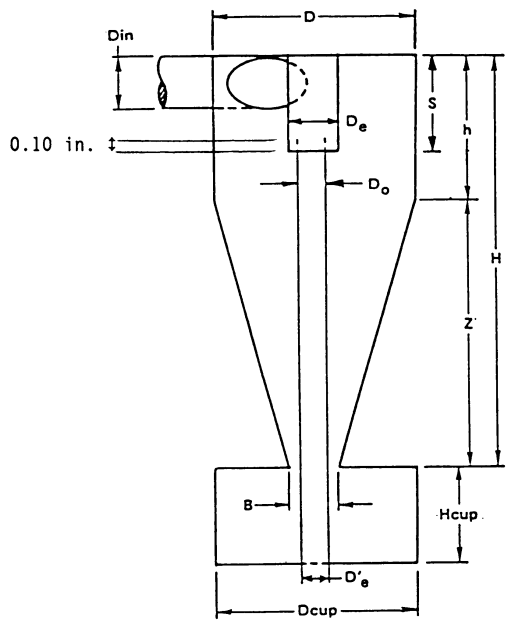

	Dimensions (±0.02 cm, ±0.01 in.)											
	Din	D	De	B	H	h	Z	S	Hcup	Dcup	D'_e	D_o
cm	1.27	4.47	1.50	1.88	6.95	2.24	4.71	1.57	2.25	4.45	1.02	1.24
inches	0.50	1.76	0.59	0.74	2.74	0.88	1.85	0.62	0.89	1.75	0.40	0.49

Figure 12. Cyclone design specifications.

TABLE 1—PERFORMANCE SPECIFICATIONS FOR SOURCE PM_{10} CYCLONES AND NOZZLE COMBINATIONS

Parameter	Units	Specification
1. Collection efficiency.	Percent	Such that collection efficiency falls within envelope specified by Section 5.7.6 and Figure 13.

TABLE 1—PERFORMANCE SPECIFICATIONS FOR SOURCE PM_{10} CYCLONES AND NOZZLE COMBINATIONS—Continued

Parameter	Units	Specification
2. Cyclone cut size (D_{50}).	μm	10 ±1 μm aerodynamic diameter.

TABLE 2—PARTICLE SIZES AND NOMINAL GAS VELOCITIES FOR EFFICIENCY

Particle size (μm)[a]	Target gas velocities (m/sec)		
	7 ±1.0	15 ±1.5	25 ±2.5
5 ±0.5			
7 ±0.5			
10 ±0.5			

TABLE 2—PARTICLE SIZES AND NOMINAL GAS VELOCITIES FOR EFFICIENCY—Continued

Particle size (μm)[a]	Target gas velocities (m/sec)		
	7 ±1.0	15 ±1.5	25 ±2.5
14 ±1.0			
20 ±1.0			

(a) Mass median aerodynamic diameter.

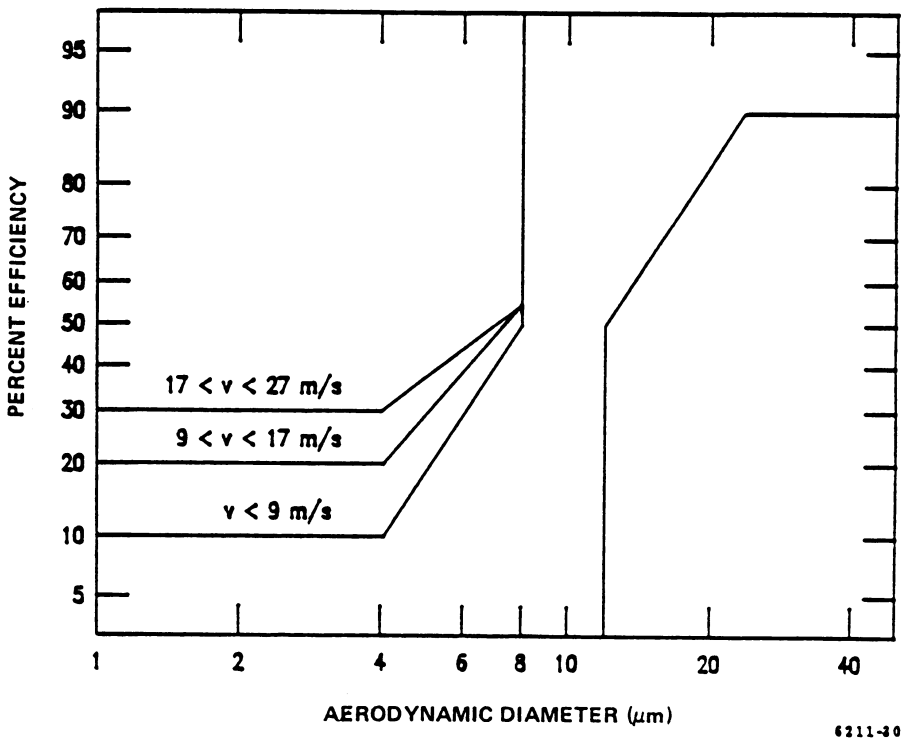

Figure 13. Efficiency envelope for the PM_{10} cyclone.

EMISSION GAS RECYCLE, DATA REDUCTION, VERSION 3.4 MAY 1986

Test ID. Code: Chapel Hill 2.
Test Location: Baghouse Outlet.
Test Site: Chapel Hill.
Test Date: 10/20/86.
Operators(s): JB RH MH.

Entered Run Data

Temperatures:

T(STK)	251.0 F
T(RCL)	259.0 F
T(LFE)	81.0 F
T(DGM)	76.0 F

System Pressures:

DH(ORI)	1.18 INWG
DP(TOT)	1.91 INWG
P(INL)	12.15 INWG
DP(RCL)	2.21 INWG
DP(PTO)	0.06 INWG

Miscellanea:

P(BAR)	29.99 INWG
DP(STK)	0.10 INWG
V(DGM)	13.744 FT3
TIME	60.00 MIN
% CO2	8.00
% O2	20.00
NOZ (IN)	0.2500

Water Content:	
Estimate	0.0%
or	
Condenser	7.0 ML
Column	0.0 GM
Raw Masses:	
Cyclone 1	21.7 MG
Filter	11.7 MG
Impinger Residue	0.0 MG
Blank Values:	
CYC Rinse	0.0 MG
Filter Holder Rinse	0.0 MG
Filter Blank	0.0 MG
Impinger Rinse	0.0 MG
Calibration Values:	
CP(PITOT)	0.840
DH@(ORI)	10.980
M(TOT LFE)	0.2298
B(TOT LFE)	−.0058
M(RCL LFE)	0.0948
B(RCL LFE)	−.0007
DGM GAMMA	0.9940

Reduced Data

Stack Velocity (FT/SEC)	15.95
Stack Gas Moisture (%)	2.4
Sample Flow Rate (ACFM)	0.3104
Total Flow Rate (ACFM)	0.5819
Recycle Flow Rate (ACFM)	0.2760
Percent Recycle	46.7
Isokinetic Ratio (%)	95.1

	(Particulate)		(MG/DNCM)	(GR/ACF)	(GR/DCF)	(LB/DSCF) (X 1E6)
	(UM)	(% <)				
Cyclone 1	10.15	35.8	56.6	0.01794	0.02470	3.53701
Backup Filter	.....	.....	30.5	0.00968	0.01332	1.907
Particulate Total	.....	.....	87.2	0.02762	0.03802	5.444

Note: Figure 14. Example inputs and outputs of the EGR reduction program.

METHOD 201A—DETERMINATION OF PM_{10} AND $PM_{2.5}$ EMISSIONS FROM STATIONARY SOURCES (CONSTANT SAMPLING RATE PROCEDURE)

1.0 Scope and Applicability

1.1 Scope. The U.S. Environmental Protection Agency (U.S. EPA or ''we'') developed this method to describe the procedures that the stack tester (''you'') must follow to measure filterable particulate matter (PM) emissions equal to or less than a nominal aerodynamic diameter of 10 micrometers (PM_{10}) and 2.5 micrometers ($PM_{2.5}$). This method can be used to measure coarse particles (*i.e.*, the difference between the measured PM_{10} concentration and the measured $PM_{2.5}$ concentration).

1.2 Applicability. This method addresses the equipment, preparation, and analysis necessary to measure filterable PM. You can use this method to measure filterable PM from stationary sources only. Filterable PM is collected in stack with this method (*i.e.*, the method measures materials that are solid or liquid at stack conditions). If the gas filtration temperature exceeds 30 °C (85 °F), then you may use the procedures in this method to measure only filterable PM (material that does not pass through a filter or a cyclone/filter combination). If the gas filtration temperature exceeds 30 °C (85 °F), and you must measure both the filterable and condensable (material that condenses after passing through a filter) components of total primary (direct) PM emissions to the atmosphere, then you must combine the procedures in this method with the procedures in Method 202 of appendix M to this part for measuring condensable PM. However, if the gas filtration temperature never exceeds 30 °C (85 °F), then use of Method 202 of appendix M to this part is not required to measure total primary PM.

1.3 Responsibility. You are responsible for obtaining the equipment and supplies you will need to use this method. You must also develop your own procedures for following this method and any additional procedures to ensure accurate sampling and analytical measurements.

1.4 Additional Methods. To obtain results, you must have a thorough knowledge of the following test methods found in appendices A–1 through A–3 of 40 CFR part 60:

(a) Method 1—Sample and velocity traverses for stationary sources.

(b) Method 2—Determination of stack gas velocity and volumetric flow rate (Type S pitot tube).

(c) Method 3—Gas analysis for the determination of dry molecular weight.

(d) Method 4—Determination of moisture content in stack gases.

(e) Method 5—Determination of particulate matter emissions from stationary sources.

1.5 Limitations. You cannot use this method to measure emissions in which water droplets are present because the size separation of the water droplets may not be representative of the dry particle size released into the air. To measure filterable PM_{10} and $PM_{2.5}$ in emissions where water droplets are known to exist, we recommend that you use Method 5 of appendix A–3 to part 60. Because of the temperature limit of the O-rings used in this sampling train, you must follow the procedures in Section 8.6.1 to test emissions from stack gas temperatures exceeding 205 °C (400 °F).

1.6 Conditions. You can use this method to obtain particle sizing at 10 micrometers and or 2.5 micrometers if you sample within 80 and 120 percent of isokinetic flow. You can also use this method to obtain total filterable particulate if you sample within 90 to 110 percent of isokinetic flow, the number of sampling points is the same as required by Method 5 of appendix A–3 to part 60 or Method 17 of appendix A–6 to part 60, and the filter temperature is within an acceptable range for these methods. For Method 5, the acceptable range for the filter temperature is generally 120 °C (248 °F) unless a higher or lower temperature is specified. The acceptable range varies depending on the source, control technology and applicable rule or permit condition. To satisfy Method 5 criteria, you may need to remove the in-stack filter and use an out-of-stack filter and recover the PM in the probe between the $PM_{2.5}$ particle sizer and the filter. In addition, to satisfy Method 5 and Method 17 criteria, you may need to sample from more than 12 traverse points. Be aware that this method determines in-stack PM_{10} and $PM_{2.5}$ filterable emissions by sampling from a recommended maximum of 12 sample points, at a constant flow rate through the train (the constant flow is necessary to maintain the size cuts of the cyclones), and with a filter that is at the stack temperature. In contrast, Method 5 or Method 17 trains are operated isokinetically with varying flow rates through the train. Method 5 and Method 17 require sampling from as many as 24 sample points. Method 5 uses an out-of-stack filter that is maintained at a constant temperature of 120 °C (248 °F). Further, to use this method in place of Method 5 or Method 17, you must extend the sampling time so that you collect the minimum mass necessary for weighing each portion of this sampling train. Also, if you are using this method as an alternative to a test method specified in a regulatory requirement (e.g., a requirement to conduct a compliance or performance test), then you must receive approval from the authority that established the regulatory requirement before you conduct the test.

2.0 Summary of Method

2.1 Summary. To measure PM_{10} and $PM_{2.5}$, extract a sample of gas at a predetermined constant flow rate through an in-stack sizing device. The particle-sizing device separates particles with nominal aerodynamic diameters of 10 micrometers and 2.5 micrometers. To minimize variations in the isokinetic sampling conditions, you must establish well-defined limits. After a sample is obtained, remove uncombined water from the particulate, then use gravimetric analysis to determine the particulate mass for each size fraction. The original method, as promulgated in 1990, has been changed by adding a $PM_{2.5}$ cyclone downstream of the PM_{10} cyclone. Both cyclones were developed and evaluated as part of a conventional five-stage cascade cyclone train. The addition of a $PM_{2.5}$ cyclone between the PM_{10} cyclone and the stack temperature filter in the sampling train supplements the measurement of PM_{10} with the measurement of $PM_{2.5}$. Without the addition of the $PM_{2.5}$ cyclone, the filterable particulate portion of the sampling train may be used to measure total and PM_{10} emissions. Likewise, with the exclusion of the PM_{10} cyclone, the filterable particulate portion of the sampling train may be used to measure total and $PM_{2.5}$ emissions. Figure 1 of Section 17 presents the schematic of the sampling train configured with this change.

3.0 Definitions

3.1 *Condensable particulate matter (CPM)* means material that is vapor phase at stack conditions, but condenses and/or reacts upon cooling and dilution in the ambient air to form solid or liquid PM immediately after discharge from the stack. Note that all CPM is assumed to be in the $PM_{2.5}$ size fraction.

3.2 *Constant weight* means a difference of no more than 0.5 mg or one percent of total weight less tare weight, whichever is greater, between two consecutive weighings, with no less than six hours of desiccation time between weighings.

3.3 *Filterable particulate matter (PM)* means particles that are emitted directly by a source as a solid or liquid at stack or release conditions and captured on the filter of a stack test train.

3.4 *Primary particulate matter (PM)* (also known as direct PM) means particles that enter the atmosphere as a direct emission from a stack or an open source. Primary PM has two components: Filterable PM and condensable PM. These two PM components have no upper particle size limit.

3.5 *Primary $PM_{2.5}$* (also known as direct $PM_{2.5}$, total $PM_{2.5}$, $PM_{2.5}$, or combined filterable $PM_{2.5}$ and condensable PM) means PM with an aerodynamic diameter less than or equal to 2.5 micrometers. These solid particles are emitted directly from an air emissions source or activity, or are the gaseous or vaporous emissions from an air emissions source or activity that condense to form PM at ambient temperatures. Direct $PM_{2.5}$ emissions include elemental carbon, directly emitted organic carbon, directly emitted sulfate, directly emitted nitrate, and other inorganic particles (including but not limited to crustal material, metals, and sea salt).

3.6 *Primary PM_{10}* (also known as direct PM_{10}, total PM_{10}, PM_{10}, or the combination of filterable PM_{10} and condensable PM) means PM with an aerodynamic diameter equal to or less than 10 micrometers.

4.0 Interferences

You cannot use this method to measure emissions where water droplets are present because the size separation of the water droplets may not be representative of the dry particle size released into the air. Stacks with entrained moisture droplets may have water droplets larger than the cut sizes for the cyclones. These water droplets normally contain particles and dissolved solids that become PM_{10} and $PM_{2.5}$ following evaporation of the water.

5.0 Safety

5.1 Disclaimer. Because the performance of this method may require the use of hazardous materials, operations, and equipment, you should develop a health and safety plan to ensure the safety of your employees who are on site conducting the particulate emission test. Your plan should conform with all applicable Occupational Safety and Health Administration, Mine Safety and Health Administration, and Department of Transportation regulatory requirements. Because of the unique situations at some facilities and because some facilities may have more stringent requirements than is required by State or federal laws, you may have to develop procedures to conform to the plant health and safety requirements.

6.0 Equipment and Supplies

Figure 2 of Section 17 shows details of the combined cyclone heads used in this method. The sampling train is the same as Method 17 of appendix A–6 to part 60 with the exception of the PM_{10} and $PM_{2.5}$ sizing devices. The following sections describe the sampling train's primary design features in detail.

6.1 Filterable Particulate Sampling Train Components.

6.1.1 Nozzle. You must use stainless steel (316 or equivalent) or fluoropolymer-coated stainless steel nozzles with a sharp tapered leading edge. We recommend one of the 12 nozzles listed in Figure 3 of Section 17 because they meet design specifications when PM_{10} cyclones are used as part of the sampling train. We also recommend that you have a large number of nozzles in small diameter increments available to increase the likelihood of using a single nozzle for the entire traverse. We recommend one of the nozzles listed in Figure 4A or 4B of Section 17 because they meet design specifications when $PM_{2.5}$ cyclones are used without PM_{10} cyclones as part of the sampling train.

6.1.2 PM_{10} and $PM_{2.5}$ Sizing Device.

6.1.2.1 Use stainless steel (316 or equivalent) or fluoropolymer-coated PM_{10} and $PM_{2.5}$ sizing devices. You may use sizing devices constructed of high-temperature specialty metals such as Inconel, Hastelloy, or Haynes 230. (See also Section 8.6.1.) The sizing devices must be cyclones that meet the design specifications shown in Figures 3, 4A, 4B, 5, and 6 of Section 17. Use a caliper to verify that the dimensions of the PM_{10} and $PM_{2.5}$ sizing devices are within ±0.02 cm of the design specifications. Example suppliers of PM_{10} and $PM_{2.5}$ sizing devices include the following:

(a) Environmental Supply Company, Inc., 2142 E. Geer Street, Durham, North Carolina 27704. Telephone No.: (919) 956–9688; Fax: (919) 682–0333.

(b) Apex Instruments, 204 Technology Park Lane, Fuquay-Varina, North Carolina 27526. Telephone No.: (919) 557–7300 (phone); Fax: (919) 557–7110.

6.1.2.2 You may use alternative particle sizing devices if they meet the requirements in Development and Laboratory Evaluation of a Five-Stage Cyclone System, EPA–600/7–78–008 (*http://cfpub.epa.gov/ols*).

6.1.3 Filter Holder. Use a filter holder that is stainless steel (316 or equivalent). A heated glass filter holder may be substituted for the steel filter holder when filtration is performed out-of-stack. Commercial-size filter holders are available depending upon project requirements, including commercial stainless steel filter holders to support 25-, 47-, 63-, 76-, 90-, 101-, and 110-mm diameter filters. Commercial size filter holders contain a fluoropolymer O-ring, a stainless steel screen that supports the particulate filter, and a final fluoropolymer O-ring. Screw the assembly together and attach to the outlet of cyclone IV. The filter must not be compressed between the fluoropolymer O-ring and the filter housing.

6.1.4 Pitot Tube. You must use a pitot tube made of heat resistant tubing. Attach the pitot tube to the probe with stainless steel fittings. Follow the specifications for the pitot tube and its orientation to the inlet nozzle given in Section 6.1.1.3 of Method 5 of appendix A–3 to part 60.

6.1.5 Probe Extension and Liner. The probe extension must be glass- or fluoropolymer-lined. Follow the specifications in Section 6.1.1.2 of Method 5 of appendix A–3 to part 60. If the gas filtration temperature never exceeds 30 °C (85 °F), then the probe may be constructed of stainless steel without a probe liner and the extension is not recovered as part of the PM.

6.1.6 Differential Pressure Gauge, Condensers, Metering Systems, Barometer, and Gas Density Determination Equipment. Follow the requirements in Sections 6.1.1.4 through 6.1.3 of Method 5 of appendix A–3 to part 60, as applicable.

6.2 Sample Recovery Equipment.

6.2.1 Filterable Particulate Recovery. Use the following equipment to quantitatively determine the amount of filterable PM recovered from the sampling train.

(a) Cyclone and filter holder brushes.

(b) Wash bottles. Two wash bottles are recommended. Any container material is acceptable, but wash bottles used for sample and blank recovery must not contribute more than 0.1 mg of residual mass to the CPM measurements.

(c) Leak-proof sample containers. Containers used for sample and blank recovery must not contribute more than 0.05 mg of residual mass to the CPM measurements.

(d) Petri dishes. For filter samples; glass or polyethylene, unless otherwise specified by the Administrator.

(e) Graduated cylinders. To measure condensed water to within 1 ml or 0.5 g. Graduated cylinders must have subdivisions not greater than 2 ml.

(f) Plastic storage containers. Air-tight containers to store silica gel.

6.2.2 Analysis Equipment.

(a) Funnel. Glass or polyethylene, to aid in sample recovery.

(b) Rubber policeman. To aid in transfer of silica gel to container; not necessary if silica gel is weighed in the field.

(c) Analytical balance. Analytical balance capable of weighing at least 0.0001 g (0.1 mg).

(d) Balance. To determine the weight of the moisture in the sampling train components, use an analytical balance accurate to ±0.5 g.

(e) Fluoropolymer beaker liners.

7.0 Reagents, Standards, and Sampling Media

7.1 Sample Collection. To collect a sample, you will need a filter and silica gel. You must also have water and crushed ice. These items must meet the following specifications.

7.1.1 Filter. Use a nonreactive, nondisintegrating glass fiber, quartz, or polymer filter that does not a have an organic binder. The filter must also have an efficiency of at least 99.95 percent (less than 0.05 percent penetration) on 0.3 micrometer dioctyl phthalate particles. You may use test data from the supplier's quality control program to document the PM filter efficiency.

7.1.2 Silica Gel. Use an indicating-type silica gel of 6 to 16 mesh. You must obtain approval from the regulatory authority that established the requirement to use this test method to use other types of desiccants (equivalent or better) before you use them. Allow the silica gel to dry for two hours at 175 °C (350 °F) if it is being reused. You do not have to dry new silica gel if the indicator shows the silica is active for moisture collection.

7.1.3 Crushed Ice. Obtain from the best readily available source.

7.1.4 Water. Use deionized, ultra-filtered water that contains 1.0 part per million by weight (1 milligram/liter) residual mass or less to recover and extract samples.

7.2 Sample Recovery and Analytical Reagents. You will need acetone and anhydrous calcium sulfate for the sample recovery and analysis. Unless otherwise indicated, all reagents must conform to the specifications established by the Committee on Analytical Reagents of the American Chemical Society. If such specifications are not available, then use the best available grade. Additional information on each of these items is in the following paragraphs.

7.2.1 Acetone. Use acetone that is stored in a glass bottle. Do not use acetone from a metal container because it will likely produce a high residue in the laboratory and field reagent blanks. You must use acetone with blank values less than 1 part per million by weight residue. Analyze acetone blanks prior to field use to confirm low blank values. In no case shall a blank value of greater than 0.0001 percent (1 part per million by weight) of the weight of acetone used in sample recovery be subtracted from the sample weight (*i.e.*, the maximum blank correction is 0.1 mg per 100 g of acetone used to recover samples).

7.2.2 Particulate Sample Desiccant. Use indicating-type anhydrous calcium sulfate to desiccate samples prior to weighing.

8.0 Sample Collection, Preservation, Storage, and Transport

8.1 Qualifications. This is a complex test method. To obtain reliable results, you should be trained and experienced with in-stack filtration systems (such as cyclones, impactors, and thimbles) and impinger and moisture train systems.

8.2 Preparations. Follow the pretest preparation instructions in Section 8.1 of Method 5 of appendix A–3 to part 60.

8.3 Site Setup. You must complete the following to properly set up for this test:

(a) Determine the sampling site location and traverse points.

(b) Calculate probe/cyclone blockage.

(c) Verify the absence of cyclonic flow.

(d) Complete a preliminary velocity profile and select a nozzle(s) and sampling rate.

8.3.1 Sampling Site Location and Traverse Point Determination. Follow the standard procedures in Method 1 of appendix A–1 to part 60 to select the appropriate sampling site. Choose a location that maximizes the distance from upstream and downstream flow disturbances.

(a) Traverse points. The required maximum number of total traverse points at any location is 12, as shown in Figure 7 of Section 17. You must prevent the disturbance and capture of any solids accumulated on the inner wall surfaces by maintaining a 1-inch distance from the stack wall (0.5 inch for sampling locations less than 36.4 inches in diameter with the pitot tube and 32.4 inches without the pitot tube). During sampling, when the $PM_{2.5}$ cyclone is used without the PM_{10}, traverse points closest to the stack walls may not be reached because the inlet

to a $PM_{2.5}$ cyclone is located approximately 2.75 inches from the end of the cyclone. For these cases, you may collect samples using the procedures in Section 11.3.2.2 of Method 1 of appendix A–3 to part 60. You must use the traverse point closest to the unreachable sampling points as replacement for the unreachable points. You must extend the sampling time at the replacement sampling point to include the duration of the unreachable traverse points.

(b) Round or rectangular duct or stack. If a duct or stack is round with two ports located 90° apart, use six sampling points on each diameter. Use a 3x4 sampling point layout for rectangular ducts or stacks. Consult with the Administrator to receive approval for other layouts before you use them.

(c) Sampling ports. You must determine if the sampling ports can accommodate the in-stack cyclones used in this method. You may need larger diameter sampling ports than those used by Method 5 of appendix A–3 to part 60 or Method 17 of appendix A–6 to part 60 for total filterable particulate sampling. When you use nozzles smaller than 0.16 inch in diameter and either a PM_{10} or a combined PM_{10} and $PM_{2.5}$ sampling apparatus, the sampling port diameter may need to be six inches in diameter to accommodate the entire apparatus because the conventional 4-inch diameter port may be too small due to the combined dimension of the PM_{10} cyclone and the nozzle extending from the cyclone, which will likely exceed the internal diameter of the port. A 4-inch port should be adequate for the single $PM_{2.5}$ sampling apparatus. However, do not use the conventional 4-inch diameter port in any circumstances in which the combined dimension of the cyclone and the nozzle extending from the cyclone exceeds the internal diameter of the port. (NOTE: If the port nipple is short, you may be able to ''hook'' the sampling head through a smaller port into the duct or stack.)

8.3.2 Probe/Cyclone Blockage Calculations. Follow the procedures in the next two sections, as appropriate.

8.3.2.1 *Ducts with diameters greater than 36.4 inches*. Based on commercially available cyclone assemblies for this procedure, ducts with diameters greater than 36.4 inches have blockage effects less than three percent, as illustrated in Figure 8 of Section 17. You must minimize the blockage effects of the combination of the in-stack nozzle/cyclones, pitot tube, and filter assembly that you use by keeping the cross-sectional area of the assembly at three percent or less of the cross-sectional area of the duct.

8.3.2.2 *Ducts with diameters between 25.7 and 36.4 inches*. Ducts with diameters between 25.7 and 36.4 inches have blockage effects ranging from three to six percent, as illustrated in Figure 8 of Section 17. Therefore, when you conduct tests on these small ducts, you must adjust the observed velocity pressures for the estimated blockage factor whenever the combined sampling apparatus blocks more than three percent of the stack or duct (*see* Sections 8.7.2.2 and 8.7.2.3 on the probe blockage factor and the final adjusted velocity pressure, respectively). (NOTE: Valid sampling with the combined $PM_{2.5}/PM_{10}$ cyclones cannot be performed with this method if the average stack blockage from the sampling assembly is greater than six percent, i.e., the stack diameter is less than 26.5 inches.)

8.3.3 *Cyclonic Flow*. Do not use the combined cyclone sampling head at sampling locations subject to cyclonic flow. Also, you must follow procedures in Method 1 of appendix A–1 to part 60 to determine the presence or absence of cyclonic flow and then perform the following calculations:

(a) As per Section 11.4 of Method 1 of appendix A–1 to part 60, find and record the angle that has a null velocity pressure for each traverse point using an S-type pitot tube.

(b) Average the absolute values of the angles that have a null velocity pressure. Do not use the sampling location if the average absolute value exceeds 20°. (NOTE: You can minimize the effects of cyclonic flow conditions by moving the sampling location, placing gas flow straighteners upstream of the sampling location, or applying a modified sampling approach as described in EPA Guideline Document GD–008, Particulate Emissions Sampling in Cyclonic Flow. You may need to obtain an alternate method approval from the regulatory authority that established the requirement to use this test method prior to using a modified sampling approach.)

8.3.4 Preliminary Velocity Profile. Conduct a preliminary velocity traverse by following Method 2 of appendix A–1 to part 60 velocity traverse procedures. The purpose of the preliminary velocity profile is to determine all of the following:

(a) The gas sampling rate for the combined probe/cyclone sampling head in order to meet the required particle size cut.

(b) The appropriate nozzle to maintain the required gas sampling rate for the velocity pressure range and isokinetic range. If the isokinetic range cannot be met (e.g., batch processes, extreme process flow or temperature variation), void the sample or use methods subject to the approval of the Administrator to correct the data. The acceptable variation from isokinetic sampling is 80 to 120 percent and no more than 100 ± 21 percent (2 out of 12 or 5 out of 24) sampling points outside of this criteria.

(c) The necessary sampling duration to obtain sufficient particulate catch weights.

8.3.4.1 *Preliminary traverse*. You must use an S-type pitot tube with a conventional

thermocouple to conduct the traverse. Conduct the preliminary traverse as close as possible to the anticipated testing time on sources that are subject to hour-by-hour gas flow rate variations of approximately ± 20 percent and/or gas temperature variations of approximately ± 28 °C (± 50 °F). (Note: You should be aware that these variations can cause errors in the cyclone cut diameters and the isokinetic sampling velocities.)

8.3.4.2 *Velocity pressure range.* Insert the S-type pitot tube at each traverse point and record the range of velocity pressures measured on data form in Method 2 of appendix A–1 to part 60. You will use this later to select the appropriate nozzle.

8.3.4.3 *Initial gas stream viscosity and molecular weight.* Determine the average gas temperature, average gas oxygen content, average carbon dioxide content, and estimated moisture content. You will use this information to calculate the initial gas stream viscosity (Equation 3) and molecular weight (Equations 1 and 2). (NOTE: You must follow the instructions outlined in Method 4 of appendix A–3 to part 60 or Alternative Moisture Measurement Method Midget Impingers (ALT–008) to estimate the moisture content. You may use a wet bulb-dry bulb measurement or hand-held hygrometer measurement to estimate the moisture content of sources with gas temperatures less than 71 °C (160 °F).)

8.3.4.4 *Approximate PM concentration in the gas stream.* Determine the approximate PM concentration for the $PM_{2.5}$ and the $PM_{2.5}$ to PM_{10} components of the gas stream through qualitative measurements or estimates from precious stack particulate emissions tests. Having an idea of the particulate concentration in the gas stream is not essential but will help you determine the appropriate sampling time to acquire sufficient PM weight for better accuracy at the source emission level. The collectible PM weight requirements depend primarily on the types of filter media and weighing capabilities that are available and needed to characterize the emissions. Estimate the collectible PM concentrations in the greater than 10 micrometer, less than or equal to 10 micrometers and greater than 2.5 micrometers, and less than or equal to 2.5 micrometer size ranges. Typical PM concentrations are listed in Table 1 of Section 17. Additionally, relevant sections of AP–42, Compilation of Air Pollutant Emission Factors, may contain particle size distributions for processes characterized in those sections, and appendix B2 of AP–42 contains generalized particle size distributions for nine industrial process categories (e.g., stationary internal combustion engines firing gasoline or diesel fuel, calcining of aggregate or unprocessed ores). The generalized particle size distributions can be used if source-specific particle size distributions are unavailable. Appendix B2 of AP–42 also contains typical collection efficiencies of various particulate control devices and example calculations showing how to estimate uncontrolled total particulate emissions, uncontrolled size-specific emissions, and controlled size-specific particulate emissions. (*http://www.epa.gov/ttnchie1/ap42.*)

8.4 Pre-test Calculations. You must perform pre-test calculations to help select the appropriate gas sampling rate through cyclone I (PM_{10}) and cyclone IV ($PM_{2.5}$). Choosing the appropriate sampling rate will allow you to maintain the appropriate particle cut diameters based upon preliminary gas stream measurements, as specified in Table 2 of Section 17.

8.4.1 Gas Sampling Rate. The gas sampling rate is defined by the performance curves for both cyclones, as illustrated in Figure 10 of Section 17. You must use the calculations in Section 8.5 to achieve the appropriate cut size specification for each cyclone. The optimum gas sampling rate is the overlap zone defined as the range below the cyclone IV 2.25 micrometer curve down to the cyclone I 11.0 micrometer curve (area between the two dark, solid lines in Figure 10 of Section 17).

8.4.2 Choosing the Appropriate Sampling Rate. You must select a gas sampling rate in the middle of the overlap zone (discussed in Section 8.4.1), as illustrated in Figure 10 of Section 17, to maximize the acceptable tolerance for slight variations in flow characteristics at the sampling location. The overlap zone is also a weak function of the gas composition. (NOTE: The acceptable range is limited, especially for gas streams with temperatures less than approximately 100 °F. At lower temperatures, it may be necessary to perform the PM_{10} and $PM_{2.5}$ separately in order to meet the necessary particle size criteria shown in Table 2 of Section 17.)

8.5 Test Calculations. You must perform all of the calculations in Table 3 of Section 17 and the calculations described in Sections 8.5.1 through 8.5.5.

8.5.1 Assumed Reynolds Number. You must select an assumed Reynolds number (N_{re}) using Equation 10 and an estimated sampling rate or from prior experience under the stack conditions determined using Methods 1 through 4 to part 60. You will perform initial test calculations based on an assumed N_{re} for the test to be performed. You must verify the assumed N_{re} by substituting the sampling rate (Q_s) calculated in Equation 7 into Equation 10. Then use Table 5 of Section 17 to determine if the N_{re} used in Equation 5 was correct.

8.5.2 Final Sampling Rate. Recalculate the final Q_s if the assumed N_{re} used in your initial calculation is not correct. Use Equation 7 to recalculate the optimum Q_s.

8.5.3 Meter Box ΔH. Use Equation 11 to calculate the meter box orifice pressure drop

(ΔH) after you calculate the optimum sampling rate and confirm the N_{re}. (NOTE: The stack gas temperature may vary during the test, which could affect the sampling rate. If the stack gas temperature varies, you must make slight adjustments in the meter box ΔH to maintain the correct constant cut diameters. Therefore, use Equation 11 to recalculate the ΔH values for 50 °F above and below the stack temperature measured during the preliminary traverse (*see* Section 8.3.4.1), and document this information in Table 4 of Section 17.)

8.5.4 Choosing a Sampling Nozzle. Select one or more nozzle sizes to provide for near isokinetic sampling rate (see Section 1.6). This will also minimize an isokinetic sampling error for the particles at each point. First calculate the mean stack gas velocity (v_s) using Equation 13. See Section 8.7.2 for information on correcting for blockage and use of different pitot tube coefficients. Then use Equation 14 to calculate the diameter (D) of a nozzle that provides for isokinetic sampling at the mean v_s at flow Q_s. From the available nozzles one size smaller and one size larger than this diameter, D, select the most appropriate nozzle. Perform the following steps for the selected nozzle.

8.5.4.1 *Minimum/maximum nozzle/stack velocity ratio*. Use Equation 15 to determine the velocity of gas in the nozzle. Use Equation 16 to calculate the minimum nozzle/stack velocity ratio (R_{min}). Use Equation 17 to calculate the maximum nozzle/stack velocity ratio (R_{max}).

8.5.4.2 *Minimum gas velocity*. Use Equation 18 to calculate the minimum gas velocity (v_{min}) if R_{min} is an imaginary number (negative value under the square root function) or if R_{min} is less than 0.5. Use Equation 19 to calculate v_{min} if R_{min} is ≥ 0.5.

8.5.4.3 *Maximum stack velocity*. Use Equation 20 to calculate the maximum stack velocity (v_{max}) if R_{max} is less than 1.5. Use Equation 21 to calculate the stack velocity if R_{max} is ≥ 1.5.

8.5.4.4 *Conversion of gas velocities to velocity pressure*. Use Equation 22 to convert v_{min} to minimum velocity pressure, Δp_{min}. Use Equation 23 to convert v_{max} to maximum velocity pressure, Δp_{max}.

8.5.4.5 *Comparison to observed velocity pressures*. Compare minimum and maximum velocity pressures with the observed velocity pressures at all traverse points during the preliminary test (*see* Section 8.3.4.2).

8.5.5 Optimum Sampling Nozzle. The nozzle you selected is appropriate if all the observed velocity pressures during the preliminary test fall within the range of the Δp_{min} and Δp_{max}. Make sure the following requirements are met then follow the procedures in Sections 8.5.5.1 and 8.5.5.2.

(a) Choose an optimum nozzle that provides for isokinetic sampling conditions as close to 100 percent as possible. This is prudent because even if there are slight variations in the gas flow rate, gas temperature, or gas composition during the actual test, you have the maximum assurance of satisfying the isokinetic criteria. Generally, one of the two candidate nozzles selected will be closer to optimum (*see* Section 8.5.4).

(b) When testing is for $PM_{2.5}$ only, you are allowed a 16 percent failure rate, rounded to the nearest whole number, of sampling points that are outside the range of the Δp_{min} and Δp_{max}. If the coarse fraction for PM_{10} determination is included, you are allowed only an eight percent failure rate of the sampling points, rounded to the nearest whole number, outside the Δp_{min} and Δp_{max}.

8.5.5.1 *Precheck*. Visually check the selected nozzle for dents before use.

8.5.5.2 *Attach the pre-selected nozzle*. Screw the pre-selected nozzle onto the main body of cyclone I using fluoropolymer tape. Use a union and cascade adaptor to connect the cyclone IV inlet to the outlet of cyclone I (*see* Figure 2 of Section 17).

8.6 Sampling Train Preparation. A schematic of the sampling train used in this method is shown in Figure 1 of Section 17. First, assemble the train and complete the leak check on the combined cyclone sampling head and pitot tube. Use the following procedures to prepare the sampling train. (NOTE: Do not contaminate the sampling train during preparation and assembly. Keep all openings, where contamination can occur, covered until just prior to assembly or until sampling is about to begin.)

8.6.1 Sampling Head and Pitot Tube. Assemble the combined cyclone train. The O-rings used in the train have a temperature limit of approximately 205 °C (400 °F). Use cyclones with stainless steel sealing rings for stack temperatures above 205 °C (400 °F) up to 260 °C (500 °F). You must also keep the nozzle covered to protect it from nicks and scratches. This method may not be suitable for sources with stack gas temperatures exceeding 260 °C (500 °F) because the threads of the cyclone components may gall or seize, thus preventing the recovery of the collected PM and rendering the cyclone unusable for subsequent use. You may use stainless steel cyclone assemblies constructed with bolt-together rather than screw-together assemblies at temperatures up to 538 °C (1,000 °F). You must use ''break-away'' or expendable stainless steel bolts that can be over-torqued and broken if necessary to release cyclone closures, thus allowing you to recover PM without damaging the cyclone flanges or contaminating the samples. You may need to use specialty metals to achieve reliable particulate mass measurements above 538 °C (1,000 °F). The method can be used at temperatures up to 1,371 °C (2,500 °F) using specially constructed high-temperature stainless steel alloys (Hastelloy or Haynes 230)

with bolt-together closures using breakaway bolts.

8.6.2 Filterable Particulate Filter Holder and Pitot Tube. Attach the pre-selected filter holder to the end of the combined cyclone sampling head (*see* Figure 2 of Section 17). Attach the S-type pitot tube to the combined cyclones after the sampling head is fully attached to the end of the probe. (NOTE: The pitot tube tip must be mounted slightly beyond the combined head cyclone sampling assembly and at least one inch off the gas flow path into the cyclone nozzle. This is similar to the pitot tube placement in Method 17 of appendix A–6 to part 60.) Securely fasten the sensing lines to the outside of the probe to ensure proper alignment of the pitot tube. Provide unions on the sensing lines so that you can connect and disconnect the S-type pitot tube tips from the combined cyclone sampling head before and after each run. Calibrate the pitot tube on the sampling head according to the most current ASTM International D3796 because the cyclone body is a potential source flow disturbance and will change the pitot coefficient value from the baseline (isolated tube) value.

8.6.3 Filter. You must number and tare the filters before use. To tare the filters, desiccate each filter at 20 ±5.6 °C (68 ±10 °F) and ambient pressure for at least 24 hours and weigh at intervals of at least six hours to a constant weight. (See Section 3.0 for a definition of constant weight.) Record results to the nearest 0.1 mg. During each weighing, the filter must not be exposed to the laboratory atmosphere for longer than two minutes and a relative humidity above 50 percent. Alternatively, the filters may be oven-dried at 104 °C (220 °F) for two to three hours, desiccated for two hours, and weighed. Use tweezers or clean disposable surgical gloves to place a labeled (identified) and preweighed filter in the filter holder. You must center the filter and properly place the gasket so that the sample gas stream will not circumvent the filter. The filter must not be compressed between the gasket and the filter housing. Check the filter for tears after the assembly is completed. Then screw or clamp the filter housing together to prevent the seal from leaking.

8.6.4 Moisture Trap. If you are measuring only filterable particulate (or you are sure that the gas filtration temperature will be maintained below 30 °C (85 °F)), then an empty modified Greenburg Smith impinger followed by an impinger containing silica gel is required. Alternatives described in Method 5 of appendix A–3 to part 60 may also be used to collect moisture that passes through the ambient filter. If you are measuring condensable PM in combination with this method, then follow the procedures in Method 202 of appendix M of this part for moisture collection.

8.6.5 Leak Check. Use the procedures outlined in Section 8.4 of Method 5 of appendix A–3 to part 60 to leak check the entire sampling system. Specifically perform the following procedures:

8.6.5.1 *Sampling train*. You must pretest the entire sampling train for leaks. The pretest leak check must have a leak rate of not more than 0.02 actual cubic feet per minute or four percent of the average sample flow during the test run, whichever is less. Additionally, you must conduct the leak check at a vacuum equal to or greater than the vacuum anticipated during the test run. Enter the leak check results on the analytical data sheet (*see* Section 11.1) for the specific test. (NOTE: Do not conduct a leak check during port changes.)

8.6.5.2 *Pitot tube assembly*. After you leak check the sample train, perform a leak check of the pitot tube assembly. Follow the procedures outlined in Section 8.4.1 of Method 5 of appendix A–3 to part 60.

8.6.6 Sampling Head. You must preheat the combined sampling head to the stack temperature of the gas stream at the test location (±10 °C, ±50 °F). This will heat the sampling head and prevent moisture from condensing from the sample gas stream.

8.6.6.1 *Warmup*. You must complete a passive warmup (of 30–40 min) within the stack before the run begins to avoid internal condensation.

8.6.6.2 *Shortened warmup*. You can shorten the warmup time by thermostated heating outside the stack (such as by a heat gun). Then place the heated sampling head inside the stack and allow the temperature to equilibrate.

8.7 Sampling Train Operation. Operate the sampling train the same as described in Section 4.1.5 of Method 5 of appendix A–3 to part 60, but use the procedures in this section for isokinetic sampling and flow rate adjustment. Maintain the flow rate calculated in Section 8.4.1 throughout the run, provided the stack temperature is within 28 °C (50 °F) of the temperature used to calculate ΔH. If stack temperatures vary by more than 28 °C (50 °F), use the appropriate ΔH value calculated in Section 8.5.3. Determine the minimum number of traverse points as in Figure 7 of Section 17. Determine the minimum total projected sampling time based on achieving the data quality objectives or emission limit of the affected facility. We recommend that you round the number of minutes sampled at each point to the nearest 15 seconds. Perform the following procedures:

8.7.1 Sample Point Dwell Time. You must calculate the flow rate-weighted dwell time (that is, sampling time) for each sampling point to ensure that the overall run provides a velocity-weighted average that is representative of the entire gas stream. Vary

the dwell time at each traverse point proportionately with the point velocity. Calculate the dwell time at each of the traverse points using Equation 24. You must use the data from the preliminary traverse to determine the average velocity pressure (Δp_{avg}). You must use the velocity pressure measured during the sampling run to determine the velocity pressure at each point (Δp_n). Here, N_{tp} equals the total number of traverse points. Each traverse point must have a dwell time of at least two minutes.

8.7.2 Adjusted Velocity Pressure. When selecting your sampling points using your preliminary velocity traverse data, your preliminary velocity pressures must be adjusted to take into account the increase in velocity due to blockage. Also, you must adjust your preliminary velocity data for differences in pitot tube coefficients. Use the following instructions to adjust the preliminary velocity pressure.

8.7.2.1 *Different pitot tube coefficient*. You must use Equation 25 to correct the recorded preliminary velocity pressures if the pitot tube mounted on the combined cyclone sampling head has a different pitot tube coefficient than the pitot tube used during the preliminary velocity traverse (*see* Section 8.3.4).

8.7.2.2 Probe blockage factor. You must use Equation 26 to calculate an average probe blockage correction factor (b_f) if the diameter of your stack or duct is between 25.7 and 36.4 inches for the combined $PM_{2.5}$/PM_{10} sampling head and pitot and between 18.8 and 26.5 inches for the $PM_{2.5}$ cyclone and pitot. A probe blockage factor is calculated because of the flow blockage caused by the relatively large cross-sectional area of the cyclone sampling head, as discussed in Section 8.3.2.2 and illustrated in Figures 8 and 9 of Section 17. You must determine the cross-sectional area of the cyclone head you use and determine its stack blockage factor. (Note: Commercially-available sampling heads (including the PM_{10} cyclone, $PM_{2.5}$ cyclone, pitot and filter holder) have a projected area of approximately 31.2 square inches when oriented into the gas stream.) As the probe is moved from the outermost to the innermost point, the amount of blockage that actually occurs ranges from approximately 13 square inches to the full 31.2 square inches plus the blockage caused by the probe extension. The average cross-sectional area blocked is 22 square inches.

8.7.2.3 *Final adjusted velocity pressure*. Calculate the final adjusted velocity pressure (Δp_{s2}) using Equation 27. (NOTE: Figures 8 and 9 of Section 17 illustrate that the blockage effect of the combined PM_{10}, $PM_{2.5}$ cyclone sampling head, and pitot tube increases rapidly below stack diameters of 26.5 inches. Therefore, the combined PM_{10}, $PM_{2.5}$ filter sampling head and pitot tube is not applicable for stacks with a diameter less than 26.5 inches because the blockage is greater than six percent. For stacks with a diameter less than 26.5 inches, $PM_{2.5}$ particulate measurements may be possible using only a $PM_{2.5}$ cyclone, pitot tube, and in-stack filter. If the blockage exceeds three percent but is less than six percent, you must follow the procedures outlined in Method 1A of appendix A–1 to part 60 to conduct tests. You must conduct the velocity traverse downstream of the sampling location or immediately before the test run.

8.7.3 Sample Collection. Collect samples the same as described in Section 4.1.5 of Method 5 of appendix A–3 to part 60, except use the procedures in this section for isokinetic sampling and flow rate adjustment. Maintain the flow rate calculated in Section 8.5 throughout the run, provided the stack temperature is within 28 °C (50 °F) of the temperature used to calculate ΔH. If stack temperatures vary by more than 28 °C (50 °F), use the appropriate ΔH value calculated in Section 8.5.3. Calculate the dwell time at each traverse point as in Equation 24. In addition to these procedures, you must also use running starts and stops if the static pressure at the sampling location is less than minus 5 inches water column. This prevents back pressure from rupturing the sample filter. If you use a running start, adjust the flow rate to the calculated value after you perform the leak check (*see* Section 8.4).

8.7.3.1 *Level and zero manometers*. Periodically check the level and zero point of the manometers during the traverse. Vibrations and temperature changes may cause them to drift.

8.7.3.2 *Portholes*. Clean the portholes prior to the test run. This will minimize the chance of collecting deposited material in the nozzle.

8.7.3.3 *Sampling procedures*. Verify that the combined cyclone sampling head temperature is at stack temperature. You must maintain the temperature of the cyclone sampling head within ±10 °C (±18 °F) of the stack temperature. (NOTE: For many stacks, portions of the cyclones and filter will be external to the stack during part of the sampling traverse. Therefore, you must heat and/or insulate portions of the cyclones and filter that are not within the stack in order to maintain the sampling head temperature at the stack temperature. Maintaining the temperature will ensure proper particle sizing and prevent condensation on the walls of the cyclones.) To begin sampling, remove the protective cover from the nozzle. Position the probe at the first sampling point with the nozzle pointing directly into the gas stream. Immediately start the pump and adjust the flow to calculated isokinetic conditions. Ensure the probe/pitot tube assembly is leveled. (NOTE: When the probe is in position, block off the openings around the probe

and porthole to prevent unrepresentative dilution of the gas stream. Take care to minimize contamination from material used to block the flow or insulate the sampling head during collection at the first sampling point.)

(a) Traverse the stack cross-section, as required by Method 1 of appendix A–1 to part 60, with the exception that you are only required to perform a 12-point traverse. Do not bump the cyclone nozzle into the stack walls when sampling near the walls or when removing or inserting the probe through the portholes. This will minimize the chance of extracting deposited materials.

(b) Record the data required on the field test data sheet for each run. Record the initial dry gas meter reading. Then take dry gas meter readings at the following times: the beginning and end of each sample time increment; when changes in flow rates are made; and when sampling is halted. Compare the velocity pressure measurements (Equations 22 and 23) with the velocity pressure measured during the preliminary traverse. Keep the meter box ΔH at the value calculated in Section 8.5.3 for the stack temperature that is observed during the test. Record all point-by-point data and other source test parameters on the field test data sheet. Do not leak check the sampling system during port changes.

(c) Maintain flow until the sampling head is completely removed from the sampling port. You must restart the sampling flow prior to inserting the sampling head into the sampling port during port changes.

(d) Maintain the flow through the sampling system at the last sampling point. At the conclusion of the test, remove the pitot tube and combined cyclone sampling head from the stack while the train is still operating (running stop). Make sure that you do not scrape the pitot tube or the combined cyclone sampling head against the port or stack walls. Then stop the pump and record the final dry gas meter reading and other test parameters on the field test data sheet. (NOTE: After you stop the pump, make sure you keep the combined cyclone head level to avoid tipping dust from the cyclone cups into the filter and/or down-comer lines.)

8.7.4 Process Data. You must document data and information on the process unit tested, the particulate control system used to control emissions, any non-particulate control system that may affect particulate emissions, the sampling train conditions, and weather conditions. Record the site barometric pressure and stack pressure on the field test data sheet. Discontinue the test if the operating conditions may cause non-representative particulate emissions.

8.7.4.1 *Particulate control system data.* Use the process and control system data to determine whether representative operating conditions were maintained throughout the testing period.

8.7.4.2 *Sampling train data.* Use the sampling train data to confirm that the measured particulate emissions are accurate and complete.

8.7.5 Sample Recovery. First remove the sampling head (combined cyclone/filter assembly) from the train probe. After the sample head is removed, perform a post-test leak check of the probe and sample train. Then recover the components from the cyclone/filter. Refer to the following sections for more detailed information.

8.7.5.1 *Remove sampling head.* After cooling and when the probe can be safely handled, wipe off all external surfaces near the cyclone nozzle and cap the inlet to the cyclone to prevent PM from entering the assembly. Remove the combined cyclone/filter sampling head from the probe. Cap the outlet of the filter housing to prevent PM from entering the assembly.

8.7.5.2 *Leak check probe/sample train assembly (post-test).* Leak check the remainder of the probe and sample train assembly (including meter box) after removing the combined cyclone head/filter. You must conduct the leak rate at a vacuum equal to or greater than the maximum vacuum achieved during the test run. Enter the results of the leak check onto the field test data sheet. If the leak rate of the sampling train (without the combined cyclone sampling head) exceeds 0.02 actual cubic feet per minute or four percent of the average sampling rate during the test run (whichever is less), the run is invalid and must be repeated.

8.7.5.3 *Weigh or measure the volume of the liquid collected in the water collection impingers and silica trap.* Measure the liquid in the first impingers to within 1 ml using a clean graduated cylinder or by weighing it to within 0.5 g using a balance. Record the volume of the liquid or weight of the liquid present to be used to calculate the moisture content of the effluent gas.

8.7.5.4 *Weigh the silica impinger.* If a balance is available in the field, weigh the silica impinger to within 0.5 g. Note the color of the indicating silica gel in the last impinger to determine whether it has been completely spent and make a notation of its condition. If you are measuring CPM in combination with this method, the weight of the silica gel can be determined before or after the post-test nitrogen purge is complete (See Section 8.5.3 of Method 202 of appendix M to this part).

8.7.5.5 *Recovery of PM.* Recovery involves the quantitative transfer of particles in the following size range: greater than 10 micrometers; less than or equal to 10 micrometers but greater than 2.5 micrometers; and less than or equal to 2.5 micrometers. You must use a nylon or fluoropolymer brush and an acetone rinse to recover particles from the

combined cyclone/filter sampling head. Use the following procedures for each container:

(a) Container #1, Less than or equal to $PM_{2.5}$ micrometer filterable particulate. Use tweezers and/or clean disposable surgical gloves to remove the filter from the filter holder. Place the filter in the Petri dish that you labeled with the test identification and Container #1. Using a dry brush and/or a sharp-edged blade, carefully transfer any PM and/or filter fibers that adhere to the filter holder gasket or filter support screen to the Petri dish. Seal the container. This container holds particles less than or equal to 2.5 micrometers that are caught on the in-stack filter. (Note: If the test is conducted for PM_{10} only, then Container #1 would be for less than or equal to PM_{10} micrometer filterable particulate.)

(b) *Container #2, Greater than PM_{10} micrometer filterable particulate.* Quantitatively recover the PM from the cyclone I cup and brush cleaning and acetone rinses of the cyclone cup, internal surface of the nozzle, and cyclone I internal surfaces, including the outside surface of the downcomer line. Seal the container and mark the liquid level on the outside of the container you labeled with test identification and Container #2. You must keep any dust found on the outside of cyclone I and cyclone nozzle external surfaces out of the sample. This container holds PM greater than 10 micrometers.

(c) *Container #3, Filterable particulate less than or equal to 10 micrometer and greater than 2.5 micrometers.* Place the solids from cyclone cup IV and the acetone (and brush cleaning) rinses of the cyclone I turnaround cup (above inner downcomer line), inside of the downcomer line, and interior surfaces of cyclone IV into Container #3. Seal the container and mark the liquid level on the outside of the container you labeled with test identification and Container #3. This container holds PM less than or equal to 10 micrometers but greater than 2.5 micrometers.

(d) *Container #4, Less than or equal to $PM_{2.5}$ micrometers acetone rinses of the exit tube of cyclone IV and front half of the filter holder.* Place the acetone rinses (and brush cleaning) of the exit tube of cyclone IV and the front half of the filter holder in container #4. Seal the container and mark the liquid level on the outside of the container you labeled with test identification and Container #4. This container holds PM that is less than or equal to 2.5 micrometers.

(e) *Container #5, Cold impinger water.* If the water from the cold impinger used for moisture collection has been weighed in the field, it can be discarded. Otherwise, quantitatively transfer liquid from the cold impinger that follows the ambient filter into a clean sample bottle (glass or plastic). Mark the liquid level on the bottle you labeled with test identification and Container #5. This container holds the remainder of the liquid water from the emission gases. If you collected condensable PM using Method 202 of appendix M to this part in conjunction with using this method, you must follow the procedures in Method 202 of appendix M to this part to recover impingers and silica used to collect moisture.

(f) *Container #6, Silica gel absorbent.* Transfer the silica gel to its original container labeled with test identification and Container #6 and seal. A funnel may make it easier to pour the silica gel without spilling. A rubber policeman may be used as an aid in removing the silica gel from the impinger. It is not necessary to remove the small amount of silica gel dust particles that may adhere to the impinger wall and are difficult to remove. Since the gain in weight is to be used for moisture calculations, do not use any water or other liquids to transfer the silica gel. If the silica gel has been weighed in the field to measure water content, it can be discarded. Otherwise, the contents of Container #6 are weighed during sample analysis.

(g) *Container #7, Acetone field reagent blank.* Take approximately 200 ml of the acetone directly from the wash bottle you used and place it in Container #7 labeled ''Acetone Field Reagent Blank.''

8.7.6 Transport Procedures. Containers must remain in an upright position at all times during shipping. You do not have to ship the containers under dry or blue ice.

9.0 Quality Control

9.1 Daily Quality Checks. You must perform daily quality checks of field log books and data entries and calculations using data quality indicators from this method and your site-specific test plan. You must review and evaluate recorded and transferred raw data, calculations, and documentation of testing procedures. You must initial or sign log book pages and data entry forms that were reviewed.

9.2 Calculation Verification. Verify the calculations by independent, manual checks. You must flag any suspect data and identify the nature of the problem and potential effect on data quality. After you complete the test, prepare a data summary and compile all the calculations and raw data sheets.

9.3 Conditions. You must document data and information on the process unit tested, the particulate control system used to control emissions, any non-particulate control system that may affect particulate emissions, the sampling train conditions, and weather conditions. Discontinue the test if the operating conditions may cause non-representative particulate emissions.

9.4 Field Analytical Balance Calibration Check. Perform calibration check procedures on field analytical balances each day that they are used. You must use National Institute of Standards and Technology (NIST)-traceable weights at a mass approximately

equal to the weight of the sample plus container you will weigh.

10.0 Calibration and Standardization

Maintain a log of all filterable particulate sampling and analysis calibrations. Include copies of the relevant portions of the calibration and field logs in the final test report.

10.1 Gas Flow Velocities. You must use an S-type pitot tube that meets the required EPA specifications (EPA Publication 600/4–77–0217b) during these velocity measurements. (Note: If, as specified in Section 8.7.2.3, testing is performed in stacks less than 26.5 inches in diameter, testers may use a standard pitot tube according to the requirements in Method 1 or 2 of appendix A–3 to part 60 of this chapter.) You must also complete the following:

(a) Visually inspect the S-type pitot tube before sampling.

(b) Leak check both legs of the pitot tube before and after sampling.

(c) Maintain proper orientation of the S-type pitot tube while making measurements.

10.1.1 S-type Pitot Tube Orientation. The S-type pitot tube is properly oriented when the yaw and the pitch axis are 90 degrees to the air flow.

10.1.2 Average Velocity Pressure Record. Instead of recording either high or low values, record the average velocity pressure at each point during flow measurements.

10.1.3 Pitot Tube Coefficient. Determine the pitot tube coefficient based on physical measurement techniques described in Method 2 of appendix A–1 to part 60. (NOTE: You must calibrate the pitot tube on the sampling head because of potential interferences from the cyclone body. Refer to Section 8.7.2 for additional information.)

10.2 Thermocouple Calibration. You must calibrate the thermocouples using the procedures described in Section 10.3.1 of Method 2 of appendix A–1 to part 60 or Alternative Method 2 Thermocouple Calibration (ALT–011). Calibrate each temperature sensor at a minimum of three points over the anticipated range of use against a NIST-traceable thermometer. Alternatively, a reference thermocouple and potentiometer calibrated against NIST standards can be used.

10.3 Nozzles. You may use stainless steel (316 or equivalent), high-temperature steel alloy, or fluoropolymer-coated nozzles for isokinetic sampling. Make sure that all nozzles are thoroughly cleaned, visually inspected, and calibrated according to the procedure outlined in Section 10.1 of Method 5 of appendix A–3 to part 60.

10.4 Dry Gas Meter Calibration. Calibrate your dry gas meter following the calibration procedures in Section 16.1 of Method 5 of appendix A–3 to part 60. Also, make sure you fully calibrate the dry gas meter to determine the volume correction factor prior to field use. Post-test calibration checks must be performed as soon as possible after the equipment has been returned to the shop. Your pre-test and post-test calibrations must agree within ±5 percent.

11.0 Analytical Procedures

11.1 Analytical Data Sheet. Record all data on the analytical data sheet. Obtain the data sheet from Figure 5–6 of Method 5 of appendix A–3 to part 60. Alternatively, data may be recorded electronically using software applications such as the Electronic Reporting Tool located at *http://www.epa.gov/ttn/chief/ert/ert_tool.html*.

11.2 Dry Weight of PM. Determine the dry weight of particulate following procedures outlined in this section.

11.2.1 Container #1, Less than or Equal to $PM_{2.5}$ Micrometer Filterable Particulate. Transfer the filter and any loose particulate from the sample container to a tared weighing dish or pan that is inert to solvent or mineral acids. Desiccate for 24 hours in a dessicator containing anhydrous calcium sulfate. Weigh to a constant weight and report the results to the nearest 0.1 mg. (See Section 3.0 for a definition of Constant weight.) If constant weight requirements cannot be met, the filter must be treated as described in Section 11.2.1 of Method 202 of appendix M to this part. Note: The nozzle and front half wash and filter collected at or below 30 °C (85 °F) may not be heated and must be maintained at or below 30 °C (85 °F).

11.2.2 Container #2, Greater than PM_{10} Micrometer Filterable Particulate Acetone Rinse. Separately treat this container like Container #4.

11.2.3 Container #3, Filterable Particulate Less than or Equal to 10 Micrometer and Greater than 2.5 Micrometers Acetone Rinse. Separately treat this container like Container #4.

11.2.4 Container #4, Less than or Equal to $PM_{2.5}$ Micrometers Acetone Rinse of the Exit Tube of Cyclone IV and Front Half of the Filter Holder. Note the level of liquid in the container and confirm on the analysis sheet whether leakage occurred during transport. If a noticeable amount of leakage has occurred, either void the sample or use methods (subject to the approval of the Administrator) to correct the final results. Quantitatively transfer the contents to a tared 250 ml beaker or tared fluoropolymer beaker liner, and evaporate to dryness at room temperature and pressure in a laboratory hood. Desiccate for 24 hours and weigh to a constant weight. Report the results to the nearest 0.1 mg.

11.2.5 Container #5, Cold Impinger Water. If the amount of water has not been determined in the field, note the level of liquid in the container and confirm on the analysis sheet whether leakage occurred during transport. If a noticeable amount of leakage has occurred, either void the sample or use

methods (subject to the approval of the Administrator) to correct the final results. Measure the liquid in this container either volumetrically to ±1 ml or gravimetrically to ±0.5 g.

11.2.6 Container #6, Silica Gel Absorbent. Weigh the spent silica gel (or silica gel plus impinger) to the nearest 0.5 g using a balance. This step may be conducted in the field.

11.2.7 Container #7, Acetone Field Reagent Blank. Use 150 ml of acetone from the blank container used for this analysis. Transfer 150 ml of the acetone to a clean 250-ml beaker or tared fluoropolymer beaker liner. Evaporate the acetone to dryness at room temperature and pressure in a laboratory hood. Following evaporation, desiccate the residue for 24 hours in a desiccator containing anhydrous calcium sulfate. Weigh and report the results to the nearest 0.1 mg.

12.0 Calculations and Data Analysis

12.1 Nomenclature. Report results in International System of Units (SI units) unless the regulatory authority that established the requirement to use this test method specifies reporting in English units. The following nomenclature is used.

A = Area of stack or duct at sampling location, square inches.
A_n = Area of nozzle, square feet.
b_f = Average blockage factor calculated in Equation 26, dimensionless.
B_{ws} = Moisture content of gas stream, fraction (e.g., 10 percent H_2O is B_{ws} = 0.10).
C = Cunningham correction factor for particle diameter, D_p, and calculated using the actual stack gas temperature, dimensionless.
$\%CO_2$ = Carbon Dioxide content of gas stream, percent by volume.
C_a = Acetone blank concentration, mg/mg.
C_{fPM10} = Conc. of filterable PM_{10}, gr/DSCF.
$C_{fPM2.5}$ = Conc. of filterable $PM_{2.5}$, gr/DSCF.
C_p = Pitot coefficient for the combined cyclone pitot, dimensionless.
C_p' = Coefficient for the pitot used in the preliminary traverse, dimensionless.
C_r = Re-estimated Cunningham correction factor for particle diameter equivalent to the actual cut size diameter and calculated using the actual stack gas temperature, dimensionless.
C_{tf} = Conc. of total filterable PM, gr/DSCF.
C_1 = -150.3162 (micropoise)
C_2 = 18.0614 (micropoise/$K^{0.5}$) = 13.4622 (micropoise/$R^{0.5}$)
$C_3 = 1.19183 \times 10^6$ (micropoise/K^2) = 3.86153×10^6 (micropoise/R^2)
C_4 = 0.591123 (micropoise)
C_5 = 91.9723 (micropoise)
$C_6 = 4.91705 \times 10^{-5}$ (micropoise/K^2) = 1.51761×10^{-5} (micropoise/R^2)
D = Inner diameter of sampling nozzle mounted on Cyclone I, inches.
D_p = Physical particle size, micrometers.
D_{50} = Particle cut diameter, micrometers.
D_{50-1} = Re-calculated particle cut diameters based on re-estimated C_r, micrometers.
D_{50LL} = Cut diameter for cyclone I corresponding to the 2.25 micrometer cut diameter for cyclone IV, micrometers.
D_{50N} = D_{50} value for cyclone IV calculated during the Nth iterative step, micrometers.
$D_{50(N+1)}$ = D_{50} value for cyclone IV calculated during the N+1 iterative step, micrometers.
D_{50T} = Cyclone I cut diameter corresponding to the middle of the overlap zone shown in Figure 10 of Section 17, micrometers.
I = Percent isokinetic sampling, dimensionless.
K_p = 85.49, ((ft/sec)/(pounds/mole -°R)).
m_a = Mass of residue of acetone after evaporation, mg.
M_d = Molecular weight of dry gas, pounds/pound mole.
mg = Milligram.
mg/L = Milligram per liter.
M_w = Molecular weight of wet gas, pounds/pound mole.
M_1 = Milligrams of PM collected on the filter, less than or equal to 2.5 micrometers.
M_2 = Milligrams of PM recovered from Container #2 (acetone blank corrected), greater than 10 micrometers.
M_3 = Milligrams of PM recovered from Container #3 (acetone blank corrected), less than or equal to 10 and greater than 2.5 micrometers.
M_4 = Milligrams of PM recovered from Container #4 (acetone blank corrected), less than or equal to 2.5 micrometers.
N_{tp} = Number of iterative steps or total traverse points.
N_{re} = Reynolds number, dimensionless.
$\%O_{2,wet}$ = Oxygen content of gas stream, % by volume of wet gas.

(NOTE: The oxygen percentage used in Equation 3 is on a wet gas basis. That means that since oxygen is typically measured on a dry gas basis, the measured percent O_2 must be multiplied by the quantity (1–B_{ws}) to convert to the actual volume fraction. Therefore, $\%O_{2,wet} = (1-B_{ws}) * \%O_{2,\ dry}$)

P_{bar} = Barometric pressure, inches Hg.
P_s = Absolute stack gas pressure, inches Hg.
Q_s = Sampling rate for cyclone I to achieve specified D_{50}.
Q_{sST} = Dry gas sampling rate through the sampling assembly, DSCFM.
Q_I = Sampling rate for cyclone I to achieve specified D_{50}.
R_{max} = Nozzle/stack velocity ratio parameter, dimensionless.
R_{min} = Nozzle/stack velocity ratio parameter, dimensionless.
T_m = Meter box and orifice gas temperature, °R.

t_n = Sampling time at point n, min.
t_r = Total projected run time, min.
T_s = Absolute stack gas temperature, °R.
t_1 = Sampling time at point 1, min.
v_{max} = Maximum gas velocity calculated from Equations 18 or 19, ft/sec.
v_{min} = Minimum gas velocity calculated from Equations 16 or 17, ft/sec.
v_n = Sample gas velocity in the nozzle, ft/sec.
v_s = Velocity of stack gas, ft/sec.
V_a = Volume of acetone blank, ml.
V_{aw} = Volume of acetone used in sample recovery wash, ml.
V_c = Quantity of water captured in impingers and silica gel, ml.
V_m = Dry gas meter volume sampled, ACF.
V_{ms} = Dry gas meter volume sampled, corrected to standard conditions, DSCF.
V_{ws} = Volume of water vapor, SCF.
V_{ic} = Volume of impinger contents sample, ml.
W_a = Weight of blank residue in acetone used to recover samples, mg.
$W_{2,3,4}$ = Weight of PM recovered from Containers #2, #3, and #4, mg.
Z = Ratio between estimated cyclone IV D_{50} values, dimensionless.
ΔH = Meter box orifice pressure drop, inches W.C.
$\Delta H_@$ = Pressure drop across orifice at flow rate of 0.75 SCFM at standard conditions, inches W.C.

(NOTE: Specific to each orifice and meter box.)

$[(\Delta p)^{0.5}]_{avg}$ = Average of square roots of the velocity pressures measured during the preliminary traverse, inches W.C.
Δp_m = Observed velocity pressure using S-type pitot tube in preliminary traverse, inches W.C.
Δp_{avg} = Average velocity pressure, inches W.C.
Δp_{max} = Maximum velocity pressure, inches W.C.
Δp_{min} = Minimum velocity pressure, inches W.C.
Δp_n = Velocity pressure measured at point n during the test run, inches W.C.
Δp_s = Velocity pressure calculated in Equation 25, inches W.C.
Δp_{s1} = Velocity pressure adjusted for combined cyclone pitot tube, inches W.C.
Δp_{s2} = Velocity pressure corrected for blockage, inches W.C.
Δp_1 = Velocity pressure measured at point 1, inches W.C.
γ = Dry gas meter gamma value, dimensionless.
μ = Gas viscosity, micropoise.
θ = Total run time, min.
ρ_a = Density of acetone, mg/ml (see label on bottle).
12.0 = Constant calculated as 60 percent of 20.5 square inch cross-sectional area of combined cyclone head, square inches.

12.2 Calculations. Perform all of the calculations found in Table 6 of Section 17. Table 6 of Section 17 also provides instructions and references for the calculations.

12.3 Analyses. Analyze D_{50} of cyclone IV and the concentrations of the PM in the various size ranges.

12.3.1 D_{50} of Cyclone IV. To determine the actual D_{50} for cyclone IV, recalculate the Cunningham correction factor and the Reynolds number for the best estimate of cyclone IV D_{50}. The following sections describe additional information on how to recalculate the Cunningham correction factor and determine which Reynolds number to use.

12.3.1.1 *Cunningham correction factor*. Recalculate the initial estimate of the Cunningham correction factor using the actual test data. Insert the actual test run data and D_{50} of 2.5 micrometers into Equation 4. This will give you a new Cunningham correction factor based on actual data.

12.3.1.2 *Initial D_{50} for cyclone IV*. Determine the initial estimate for cyclone IV D_{50} using the test condition Reynolds number calculated with Equation 10 as indicated in Table 3 of Section 17. Refer to the following instructions.

(a) If the Reynolds number is less than 3,162, calculate the D_{50} for cyclone IV with Equation 34, using actual test data.

(b) If the Reynolds number is greater than or equal to 3,162, calculate the D_{50} for cyclone IV with Equation 35 using actual test data.

(c) Insert the ''new'' D_{50} value calculated by either Equation 34 or 35 into Equation 36 to re-establish the Cunningham Correction Factor (C_r). (NOTE: Use the test condition calculated Reynolds number to determine the most appropriate equation (Equation 34 or 35).)

12.3.1.3 *Re-establish cyclone IV D_{50}*. Use the re-established Cunningham correction factor (calculated in the previous step) and the calculated Reynolds number to determine D_{50-1}.

(a) Use Equation 37 to calculate the re-established cyclone IV D_{50-1} if the Reynolds number is less than 3,162.

(b) Use Equation 38 to calculate the re-established cyclone IV D_{50-1} if the Reynolds number is greater than or equal to 3,162.

12.3.1.4 *Establish ''Z'' values*. The ''Z'' value is the result of an analysis that you must perform to determine if the C_r is acceptable. Compare the calculated cyclone IV D_{50} (either Equation 34 or 35) to the re-established cyclone IV D_{50-1} (either Equation 36 or 37) values based upon the test condition calculated Reynolds number (Equation 39). Follow these procedures.

(a) Use Equation 39 to calculate the ''Z'' values. If the ''Z'' value is between 0.99 and 1.01, the D_{50-1} value is the best estimate of the cyclone IV D_{50} cut diameter for your test run.

(b) If the ''Z'' value is greater than 1.01 or less than 0.99, re-establish a C_r based on the D_{50-1} value determined in either Equations 36 or 37, depending upon the test condition Reynolds number.

(c) Use the second revised C_r to re-calculate the cyclone IV D_{50}.

(d) Repeat this iterative process as many times as necessary using the prescribed equations until you achieve the criteria documented in Equation 40.

12.3.2 Particulate Concentration. Use the particulate catch weights in the combined cyclone sampling train to calculate the concentration of PM in the various size ranges. You must correct the concentrations for the acetone blank.

12.3.2.1 *Acetone blank concentration*. Use Equation 42 to calculate the acetone blank concentration (C_a).

12.3.2.2 *Acetone blank residue weight*. Use Equation 44 to calculate the acetone blank weight ($W_{a\ (2,3,4)}$). Subtract the weight of the acetone blank from the particulate weight catch in each size fraction.

12.3.2.3 *Particulate weight catch per size fraction*. Correct each of the PM weights per size fraction by subtracting the acetone blank weight (*i.e.*, $M_{2,3,4}$–W_a). (NOTE: Do not subtract a blank value of greater than 0.1 mg per 100 ml of the acetone used from the sample recovery.) Use the following procedures.

(a) Use Equation 45 to calculate the PM recovered from Containers #1, #2, #3, and #4. This is the total collectible PM (C_{tf}).

(b) Use Equation 46 to determine the quantitative recovery of PM_{10} (C_{fPM10}) from Containers #1, #3, and #4.

(c) Use Equation 47 to determine the quantitative recovery of $PM_{2.5}$ ($C_{fPM2.5}$) recovered from Containers #1 and #4.

12.4 Reporting. You must prepare a test report following the guidance in EPA Guidance Document 043, Preparation and Review of Test Reports (December 1998).

12.5 Equations. Use the following equations to complete the calculations required in this test method.

Molecular Weight of Dry Gas. Calculate the molecular weight of the dry gas using Equation 1.

$$M_d = 0.44\,(\%\,CO_2) + 0.32\,(\%\,O_2) + 0.28\,(100 - \%\,O_2 - \%\,CO_2) \qquad \text{(Eq. 1)}$$

Molecular Weight of Wet Gas. Calculate the molecular weight of the stack gas on a wet basis using Equation 2.

$$M_w = M_d\,(1 - B_{ws}) + 18\,(B_{ws}) \qquad \text{(Eq. 2)}$$

Gas Stream Viscosity. Calculate the gas stream viscosity using Equation 3. This equation uses constants for gas temperatures in °R.

$$\mu = C_1 + C_2\sqrt{T_s} + C_3\,T_s^{-2} + C_4\,(\%\,O_{2,wet}) - C_5\,B_{ws} + C_6\,B_{ws}\,T_s^2 \qquad \text{(Eq. 3)}$$

Cunningham Correction Factor. The Cunningham correction factor is calculated for a 2.25 micrometer diameter particle.

$$C = 1 + 0.0057193\left[\frac{\mu}{P_s\,D_{50}}\right]\left[\frac{T_s}{M_w}\right]^{0.5} \qquad \text{(Eq. 4)}$$

Lower Limit Cut Diameter for Cyclone I for N_{re} Less than 3,162. The Cunningham correction factor is calculated for a 2.25 micrometer diameter particle.

$$D_{50\,LL} = 9.507\,C^{0.3007}\left[\frac{M_w\,P_s}{T_s}\right]^{0.1993} \qquad \text{(Eq. 5)}$$

Cut Diameter for Cyclone I for the Middle of the Overlap Zone.

$$D_{50\,T} = \left(\frac{11 + D_{50\,LL}}{2}\right) \qquad \text{(Eq. 6)}$$

Sampling Rate Using Both PM_{10} and $PM_{2.5}$ Cyclones.

$$Q_s = Q_I = 0.07296\,(\mu)\left[\frac{T_s}{M_w\,P_s}\right]^{0.2949}\left[\frac{1}{D_{50T}}\right]^{1.4102} \qquad \text{(Eq. 7)}$$

Sampling Rate Using Only $PM_{2.5}$ Cyclone.

For N_{re} Less than 3,162:

$$Q_{IV} = 0.0060639\left[\frac{\mu}{C^{0.4242}}\right]\left[\frac{P_S M_W}{T_s}\right]^{-0.5759}\left[\frac{1}{D_{50}}\right]^{0.8481} \qquad \text{(Eq. 8)}$$

For N_{re} greater than or equal to 3,162:

$$Q_{IV} = 0.07657\left[\frac{\mu}{C^{0.6205}}\right]\left[\frac{P_S M_W}{T_s}\right]^{-0.3795}\left[\frac{1}{D_{50}}\right]^{1.241} \qquad \text{(Eq. 9)}$$

Reynolds Number.

$$N_{re} = 8.64\,x\,10^5\left[\frac{P_s\,M_w}{T_s}\right]\left[\frac{Q_s}{\mu}\right] \qquad \text{(Eq. 10)}$$

Meter Box Orifice Pressure Drop.

$$\Delta H = \left[\frac{Q_s (1 - B_{ws}) P_s}{T_s}\right]^2 \left[\frac{1.083\, T_m\, M_d\, \Delta H@}{P_{bar}}\right] \qquad \text{(Eq. 11)}$$

Lower Limit Cut Diameter for Cyclone I for N_{re} Greater than or Equal to 3,162. The Cunningham correction factor is calculated for a 2.25 micrometer diameter particle.

$$D_{50LL} = 10.0959\, C^{0.4400} \left[\frac{M_w\, P_s}{T_s}\right]^{0.0600} \qquad \text{(Eq. 12)}$$

Velocity of Stack Gas. Correct the mean preliminary velocity pressure for C_p and blockage using Equations 25, 26, and 27.

$$v_s = K_p\, C_p \left(\sqrt{(\Delta p)}\right)_{avg} \left[\sqrt{\frac{T_s}{P_s\, M_w}}\right] \qquad \text{(Eq. 13)}$$

Calculated Nozzle Diameter for Acceptable Sampling Rate.

$$D = \left[\frac{3.056\, Q_s}{v_s}\right]^{0.5} \qquad \text{(Eq. 14)}$$

Velocity of Gas in Nozzle.

$$V_n = \frac{\left(\dfrac{Q_s}{60 \dfrac{min}{s}}\right)}{A_n} \qquad \text{(Eq. 15)}$$

Minimum Nozzle/Stack Velocity Ratio Parameter.

$$R_{min} = \left[0.2457 + \left(0.3072 - \frac{0.2603\,(\mu)\,(Q_s)^{0.5}}{v_n^{1.5}} \right)^{0.5} \right] \qquad \text{(Eq. 16)}$$

Maximum Nozzle/Stack Velocity Ratio Parameter.

$$R_{max} = \left[0.4457 + \left(0.5690 + \frac{0.2603\,(\mu)\,(Q_s)^{0.5}}{v_n^{1.5}} \right)^{0.5} \right] \qquad \text{(Eq. 17)}$$

Minimum Gas Velocity for R_{min} Less than 0.5.

$$v_{min} = v_n\,(0.5) \qquad \text{(Eq. 18)}$$

Minimum Gas Velocity for R_{min} Greater than or Equal to 0.5.

$$v_{min} = v_n\ R_{min} \qquad \text{(Eq. 19)}$$

Maximum Gas Velocity for R_{max} Less than to 1.5.

$$v_{max} = v_n\ R_{max} \qquad \text{(Eq. 20)}$$

Maximum Gas Velocity for R_{max} Greater than or Equal to 1.5.

$$v_{max} = v_n\,(1.5) \qquad \text{(Eq. 21)}$$

Minimum Velocity Pressure.

$$\Delta p_{min} = 1.3686 \times 10^{-4} \left[\frac{P_s\ M_w}{T_s} \right] \left[\frac{v_{min}}{C_p} \right]^2 \qquad \text{(Eq. 22)}$$

Maximum Velocity Pressure.

$$\Delta p_{max} = 1.3686 \times 10^{-4} \left[\frac{P_s M_w}{T_s}\right] \left[\frac{v_{max}}{C_p}\right]^2 \qquad \text{(Eq. 23)}$$

Sampling Dwell Time at Each Point. N_{tp} is the total number of traverse points. You must use the preliminary velocity traverse data.

$$t_n = \left[\frac{Cp\sqrt{\Delta p_n}}{C^1p\left(\sqrt{\Delta p_1}\right)_{avg}}\right]\left[\frac{t_r}{N_{tp}}\right] \qquad \text{(Eq. 24)}$$

Adjusted Velocity Pressure.

$$\Delta p_s = \Delta p_m \left[\frac{C_p}{C_p'}\right]^2 \qquad \text{(Eq. 25)}$$

Average Probe Blockage Factor.

$$b_f = \frac{22.0}{A} \qquad \text{(Eq. 26)}$$

Velocity Pressure.

$$\Delta p_{s_2} = \Delta p_{s_1} \left[\frac{1}{(1 - b_f)}\right]^2 \qquad \text{(Eq. 27)}$$

Dry Gas Volume Sampled at Standard Conditions.

$$V_{ms} = \left[\frac{528}{29.92}\right] [\gamma V_m] \left[\frac{\left(P_{bar} + \frac{\Delta H}{13.6}\right)}{T_m}\right] \qquad \text{(Eq. 28)}$$

Sample Flow Rate at Standard Conditions.

$$Q_{sST} = \frac{V_{ms}}{\theta} \qquad \text{(Eq. 29)}$$

Volume of Water Vapor.

$$V_{ws} = 0.04707\ V_c \qquad \text{(Eq.30)}$$

Moisture Content of Gas Stream.

$$B_{ws} = \left[\frac{V_{ws}}{V_{ms} + V_{ws}}\right] \qquad \text{(Eq. 31)}$$

Sampling Rate.

$$Q_s = \frac{29.92}{528} Q_{sST} \left[\frac{1}{(1 - B_{ws})}\right] \left[\frac{T_s}{P_s}\right] \qquad \text{(Eq. 32)}$$

(NOTE: The viscosity and Reynolds Number must be recalculated using the actual stack temperature, moisture, and oxygen content.)

Actual Particle Cut Diameter for Cyclone I. This is based on actual temperatures and pressures measured during the test run.

$$D_{50} = 0.15625 \left[\frac{T_s}{M_w\ P_s}\right]^{0.2091} \left[\frac{\mu}{Q_s}\right]^{0.7091} \qquad \text{(Eq. 33)}$$

Particle Cut Diameter for N_{re} Less than 3,162 for Cyclone IV. C must be recalculated using the actual test data and a D_{50} for 2.5 micrometer diameter particle size.

$$D_{50} = 0.0024302 \left[\frac{\mu}{Q_s}\right]^{1.1791} \left[\frac{1}{C}\right]^{0.5} \left[\frac{T_s}{P_s\ M_w}\right]^{0.6790} \qquad \text{(Eq. 34)}$$

Particle Cut Diameter for N_{re} Greater than or Equal to 3,162 for Cyclone IV. C must be recalculated using the actual test run data and a D_{50} for 2.5 micrometer diameter particle size.

$$D_{50} = 0.019723 \left[\frac{\mu}{Q_s}\right]^{0.8058} \left[\frac{1}{C}\right]^{0.5} \left[\frac{T_s}{P_s\ M_w}\right]^{0.3058} \qquad \text{(Eq. 35)}$$

Re-estimated Cunningham Correction Factor. You must use the actual test run Reynolds Number (N_{re}) value and select the appropriate D_{50} from Equation 33 or 34 (or Equation 37 or 38 if reiterating).

$$C_r = 1 + 0.0057193 \left[\frac{\mu}{P_s\ D_{50}}\right] \left[\frac{T_s}{M_w}\right]^{0.5} \qquad \text{(Eq. 36)}$$

Re-calculated Particle Cut Diameter for N_{re} Less than 3,162.

$$D_{50-1} = 0.0024302 \left[\frac{\mu}{Q_s}\right]^{1.1791} \left[\frac{1}{C_r}\right]^{0.5} \left[\frac{T_s}{P_s\ M_w}\right]^{0.6790} \qquad \text{(Eq. 37)}$$

Re-calculated Particle Cut Diameter for N Greater than or Equal to 3,162.

$$D_{50-1} = 0.019723 \left[\frac{\mu}{Q_s}\right]^{0.8058} \left[\frac{1}{C_r}\right]^{0.5} \left[\frac{T_S}{P_s\ M_w}\right]^{0.3058} \qquad \text{(Eq. 38)}$$

Ratio (Z) Between D_{50} and D_{50-1} Values.

$$Z = \frac{D_{50-1}}{D_{50}} \qquad \text{(Eq. 39)}$$

Acceptance Criteria for Z Values. The number of iterative steps is represented by N.

$$0.99 \leq \left[Z = \left(\frac{D_{50_N}}{D_{50_{N+1}}}\right)\right] \leq 1.01 \qquad \text{(Eq. 40)}$$

Percent Isokinetic Sampling.

$$I = \left(\frac{100\ T_s\ V_{ms}\ 29.92}{60\ v_s\ \theta\ A_n\ P_s\ (1 - B_{ws})\ 528} \right) \qquad \text{(Eq. 41)}$$

Acetone Blank Concentration.

$$C_a = \frac{m_a}{V_a\ \rho_a} \qquad \text{(Eq. 42)}$$

Acetone Blank Correction Weight.

$$M_{(2,3,4)} = W_{(2,3,4)} - W_{a(2,3,4)} \qquad \text{(Eq. 43)}$$

Acetone Blank Weight.

$$W_a = C_a \quad V_{aw}\ \rho_a \qquad \text{(Eq. 44)}$$

Concentration of Total Filterable PM.

$$C_{tf} = \left(\frac{7000}{453,592} \right) \left[\frac{M_1 + M_2 + M_3 + M_4}{V_{ms}} \right] \qquad \text{(Eq. 45)}$$

Concentration of Filterable PM_{10}.

$$C_{fPM10} = \left(\frac{7000}{453,592} \right) \left[\frac{M_1 + M_3 + M_4}{V_{ms}} \right] \qquad \text{(Eq. 46)}$$

Concentration of Filterable $PM_{2.5}$.

$$C_{fPM2.5} = \left(\frac{7000}{453,592} \right) \left[\frac{M_1 + M_4}{V_{ms}} \right] \qquad \text{(Eq. 47)}$$

13.0 Method Performance

13.1 Field evaluation of PM_{10} and total PM showed that the precision of constant sampling rate method was the same magnitude as Method 17 of appendix A–6 to part 60 (approximately five percent). Precision in PM_{10} and total PM between multiple trains showed standard deviations of four to five percent and total mass compared to 4.7 percent observed for Method 17 in simultaneous test runs at a Portland cement clinker cooler exhaust. The accuracy of the constant sampling rate PM_{10} method for total mass, referenced to Method 17, was -2 ± 4.4 percent (Farthing, 1988a).

13.2 Laboratory evaluation and guidance for PM_{10} cyclones were designed to limit error due to spatial variations to 10 percent. The maximum allowable error due to an isokinetic sampling was limited to ±20 percent for 10 micrometer particles in laboratory tests (Farthing, 1988b).

13.3 A field evaluation of the revised Method 201A by EPA showed that the detection limit was 2.54 mg for total filterable PM, 1.44 mg for filterable PM_{10}, and 1.35 mg for $PM_{2.5}$. The precision resulting from 10 quadruplicate tests (40 test runs) conducted for the field evaluation was 6.7 percent relative standard deviation. The field evaluation also showed that the blank expected from Method 201A was less than 0.9 mg (EPA, 2010).

14.0 Alternative Procedures

Alternative methods for estimating the moisture content (ALT–008) and thermocouple calibration (ALT–011) can be found at *http://www.epa.gov/ttn/emc/approalt.html*.

15.0 Waste Management

[Reserved]

16.0 References

(1) Dawes, S.S., and W.E. Farthing. 1990. ''Application Guide for Measurement of $PM_{2.5}$ at Stationary Sources,'' U.S. Environmental Protection Agency, Atmospheric Research and Exposure Assessment Laboratory, Research Triangle Park, NC, 27511, EPA–600/3–90/057 (NTIS No.: PB 90–247198).

(2) Farthing, *et al.* 1988a. ''PM_{10} Source Measurement Methodology: Field Studies,'' EPA 600/3–88/055, NTIS PB89–194278/AS, U.S. Environmental Protection Agency, Research Triangle Park, NC 27711.

(3) Farthing, W.E., and S.S. Dawes. 1988b. ''Application Guide for Source PM_{10} Measurement with Constant Sampling Rate,'' EPA/600/3–88–057, U.S. Environmental Protection Agency, Research Triangle Park, NC 27711.

(4) Richards, J.R. 1996. ''Test protocol: PCA $PM_{10}/PM_{2.5}$ Emission Factor Chemical Characterization Testing,'' PCA R&D Serial No. 2081, Portland Cement Association.

(5) U.S. Environmental Protection Agency, Federal Reference Methods 1 through 5 and Method 17, 40 CFR part 60, Appendix A–1 through A–3 and A–6.

(6) U.S. Environmental Protection Agency. 2010. ''Field Evaluation of an Improved Method for Sampling and Analysis of Filterable and Condensable Particulate Matter.'' Office of Air Quality Planning and Standards, Sector Policy and Program Division Monitoring Policy Group. Research Triangle Park, NC 27711.

17.0 Tables, Diagrams, Flowcharts, and Validation Data

You must use the following tables, diagrams, flowcharts, and data to complete this test method successfully.

TABLE 1—TYPICAL PM CONCENTRATIONS

Particle size range	Concentration and % by weight
Total collectible particulate	0.015 gr/DSCF.
Less than or equal to 10 and greater than 2.5 micrometers	40% of total collectible PM.
≤2.5 micrometers	20% of total collectible PM.

TABLE 2—REQUIRED CYCLONE CUT DIAMETERS (D_{50})

Cyclone	Min. cut diameter (micrometer)	Max. cut diameter (micrometer)
PM_{10} Cyclone (Cyclone I from five stage cyclone)	9	11
$PM_{2.5}$ Cyclone (Cyclone IV from five stage cyclone)	2.25	2.75

TABLE 3—TEST CALCULATIONS

If you are using . . .	To calculate . . .	Then use . . .
Preliminary data	Dry gas molecular weight, M_d	Equation 1.
Dry gas molecular weight (M_d) and preliminary moisture content of the gas stream.	wet gas molecular weight, M_W	Equation 2.[a]

TABLE 3—TEST CALCULATIONS—Continued

If you are using . . .	To calculate . . .	Then use . . .
Stack gas temperature, and oxygen and moisture content of the gas stream.	gas viscosity, μ	Equation 3.
Gas viscosity, μ	Cunningham correction factor[b], C	Equation 4.
Reynolds Number[c] (N_{re})	Preliminary lower limit cut diameter for cyclone I, D_{50LL}.	Equation 5.
N_{re} less than 3,162	Cut diameter for cyclone I for middle of the overlap zone, D_{50T}.	Equation 6.
D_{50LL} from Equation 5	Final sampling rate for cyclone I, $Q_I(Q_s)$	Equation 7.
D_{50T} from Equation 6	Final sampling rate for cyclone IV, Q_{IV}	Equation 8.
D_{50} for $PM_{2.5}$ cyclone and N_{re} less than 3,162	Final sampling rate for cyclone IV, Q_{IV}	Equation 9.
D_{50} for $PM_{2.5}$ cyclone and N_{re} greater than or equal to 3,162.	Verify the assumed Reynolds number, N_{re}	Equation 10.
$Q_I(Q_s)$ from Equation 7		

[a] Use Method 4 to determine the moisture content of the stack gas. Use a wet bulb-dry bulb measurement device or hand-held hygrometer to estimate moisture content of sources with gas temperature less than 160 °F.
[b] For the lower cut diameter of cyclone IV, 2.25 micrometer.
[c] Verify the assumed Reynolds number, using the procedure in Section 8.5.1, before proceeding to Equation 11.

TABLE 4—ΔH VALUES BASED ON PRELIMINARY TRAVERSE DATA

Stack Temperature (°R)	T_s—50°	T_s	T_s + 50°
ΔH, (inches W.C.)	a	a	a

[a] These values are to be filled in by the stack tester.

TABLE 5—VERIFICATION OF THE ASSUMED REYNOLDS NUMBER

If the N_{re} is . . .	Then . . .	And . . .
Less than 3,162	Calculate ΔH for the meter box	Assume original D_{50LL} is correct
Greater than or equal to 3,162	Recalculate D_{50LL} using Equation 12.	Substitute the "new" D_{50LL} into Equation 6 to recalculate D_{50T}.

TABLE 6—CALCULATIONS FOR RECOVERY OF PM_{10} AND $PM_{2.5}$

Calculations	Instructions and References
Average dry gas meter temperature	See field test data sheet.
Average orifice pressure drop	See field test data sheet.
Dry gas volume (V_{ms})	Use Equation 28 to correct the sample volume measured by the dry gas meter to standard conditions (20 °C, 760 mm Hg or 68 °F, 29.92 inches Hg).
Dry gas sampling rate (Q_{sST})	Must be calculated using Equation 29.
Volume of water condensed (V_{ws})	Use Equation 30 to determine the water condensed in the impingers and silica gel combination. Determine the total moisture catch by measuring the change in volume or weight in the impingers and weighing the silica gel.
Moisture content of gas stream (B_{ws})	Calculate this using Equation 31.
Sampling rate (Q_s)	Calculate this using Equation 32.
Test condition Reynolds number[a]	Use Equation 10 to calculate the actual Reynolds number during test conditions.
Actual D_{50} of cyclone I	Calculate this using Equation 33. This calculation is based on the average temperatures and pressures measured during the test run.
Stack gas velocity (v_s)	Calculate this using Equation 13.
Percent isokinetic rate (%I)	Calculate this using Equation 41.

[a] Calculate the Reynolds number at the cyclone IV inlet during the test based on: (1) The sampling rate for the combined cyclone head, (2) the actual gas viscosity for the test, and (3) the dry and wet gas stream molecular weights.

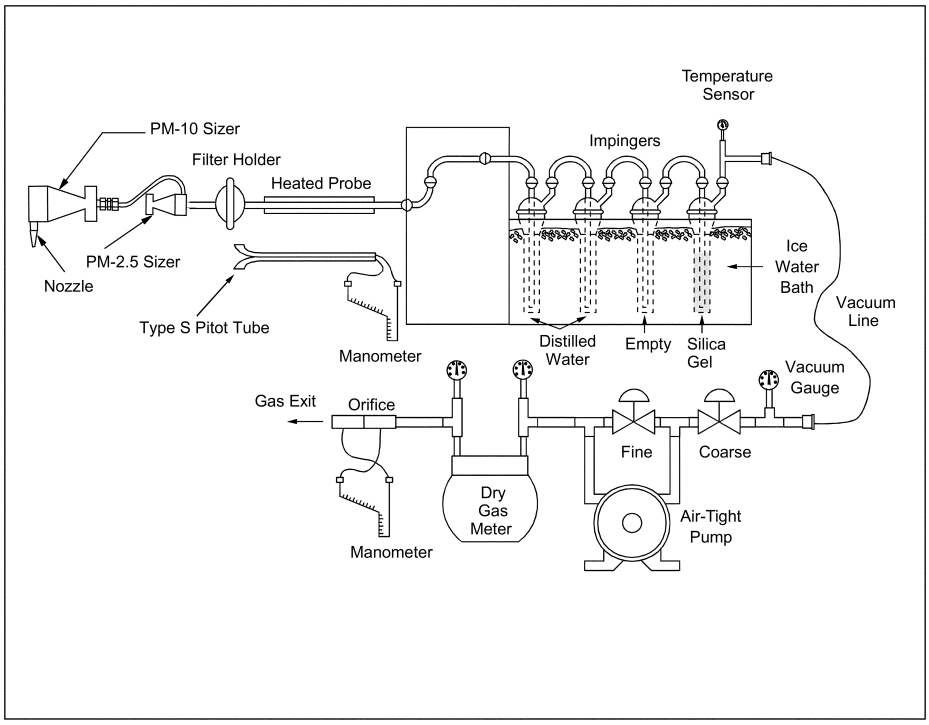

Figure 1. In-stack PM_{10} and $PM_{2.5}$ Sampling Train

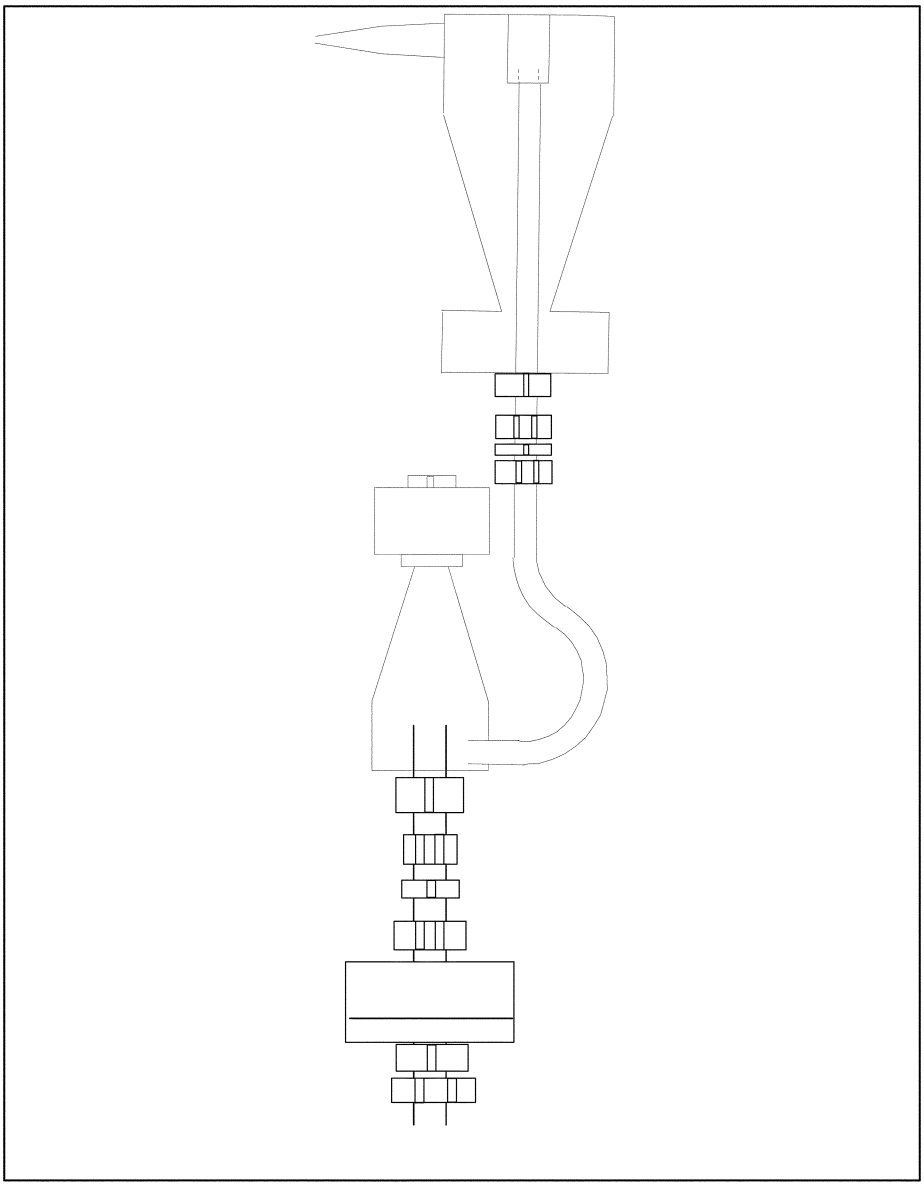

Figure 2. Combined Cyclone Sampling Head

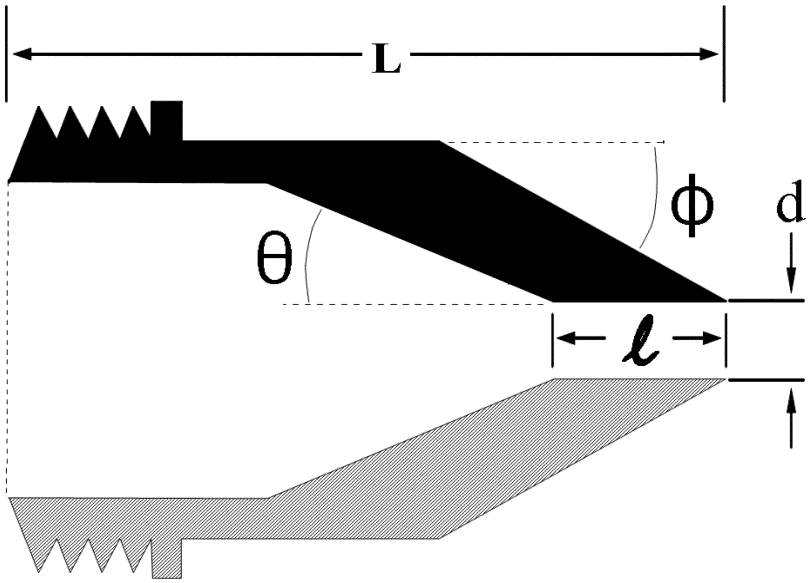

Nozzle Diameter, d (inches)	Cone Angle, θ (degrees)	Outside Taper, Φ (degrees)	Straight Inlet Length, l inches)	Total Length, L (inches)
0.125	4	15	<0.05	2.710 ± 0.05
0.136	4	15	<0.05	2.653 ± 0.05
0.150	4	15	<0.05	2.553 ± 0.05
0.164	5	15	<0.05	1.970 ± 0.05
0.180	6	15	<0.05	1.572 ± 0.05
0.197	6	15	<0.05	1.491 ± 0.05
0.215	6	15	<0.05	1.450 ± 0.05
0.233	6	15	<0.05	1.450 ± 0.05
0.264	5	15	<0.05	1.450 ± 0.05
0.300	4	15	<0.05	1.480 ± 0.05
0.342	4	15	<0.05	1.450 ± 0.05
0.390	3	15	<0.05	1.450 ± 0.05

Figure 3. Nozzle Design Specifications for PM_{10} Cyclone

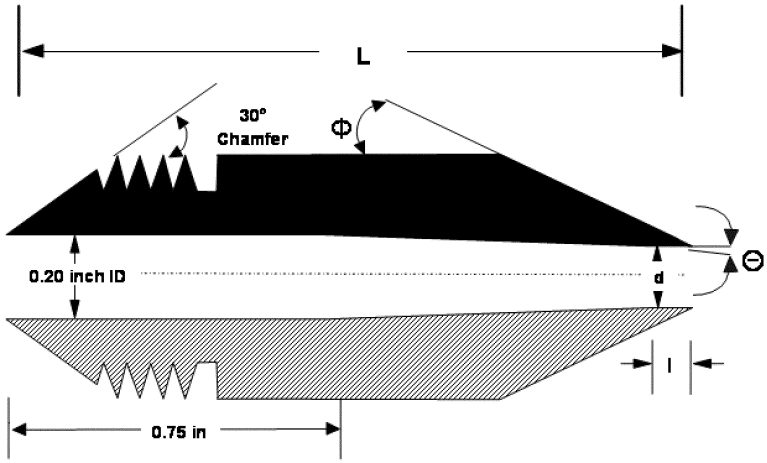

Nozzle Diameter, d (inches)	Internal Cone Angle, θ (degrees)	Outside Taper, Φ (degrees)	Straight Inlet Length, l (inches)	Total Length, L (inches)
0.125	3	15	≤ 0.05	1.45 ± 0.05
0.138	2	15	≤ 0.05	1.45 ± 0.05
0.156	1	15	≤ 0.05	1.45 ± 0.05
0.172	1	15	≤ 0.05	1.45 ± 0.05
0.188	1	15	≤ 0.05	1.45 ± 0.05
0.200	0	15	≤ 0.05	1.45 ± 0.05

Figure 4A. Nozzle Design for $PM_{2.5}$ Cyclone (Higher Stack Flow)

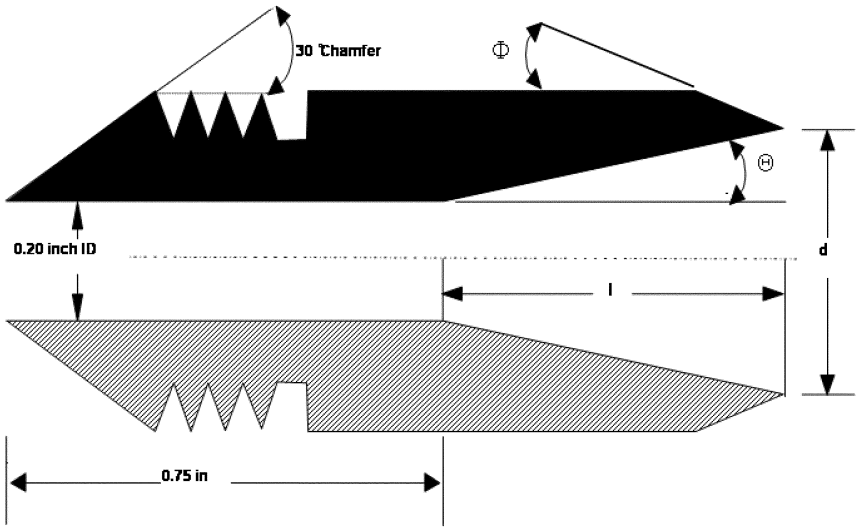

Nozzle diameter, d (inches)	Cone Angle, θ (degrees)	Outside taper, Φ (degrees)	Internal Taper length, l (inches)
0.216	5	15	0.093
0.234	5	15	0.194
0.253	5	15	0.304
0.274	5	15	0.422
0.296	5	15	0.549
0.320	5	15	0.688

Figure 4B. Nozzle Design for $PM_{2.5}$ Cyclone (Lower Stack Flow)

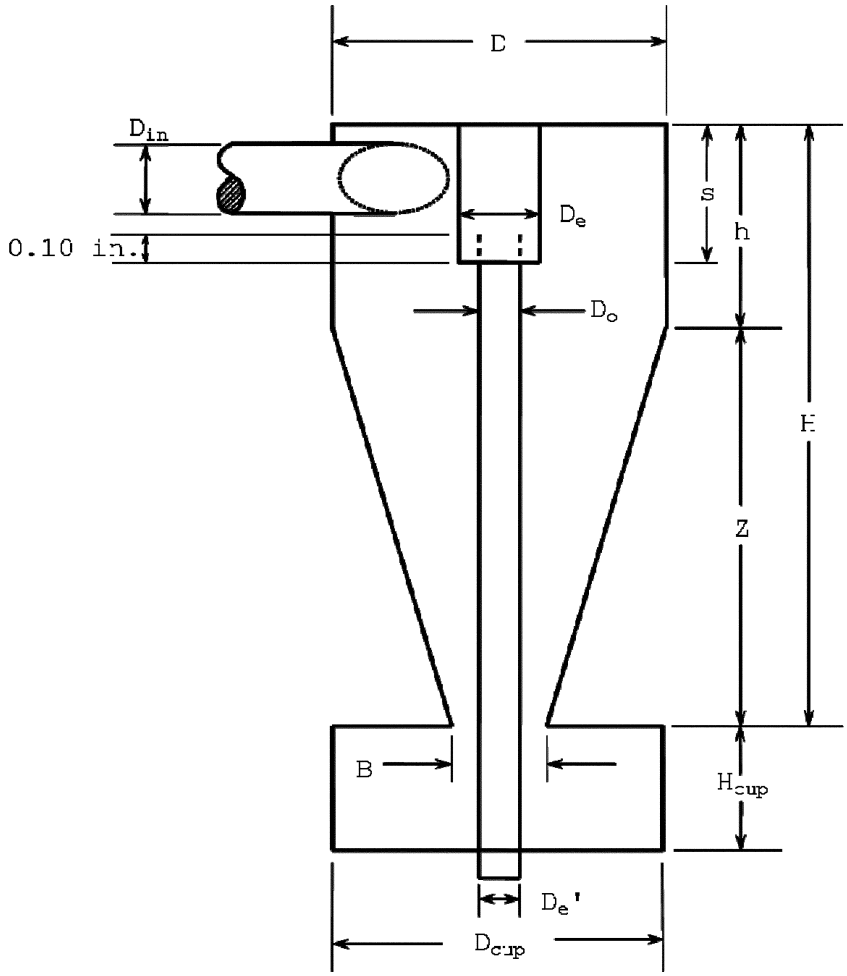

Cyclone I (10 Micrometer)	Cyclone Interior Dimensions (cm ± 0.02 cm)											
	D_{in}	D	D_e	B	H	h	Z	S	H_{cup}	D_{cup}	D_e'	D_o
	1.27	4.47	1.50	1.88	6.95	2.24	4.71	1.57	2.25	4.45	1.02	1.24

Figure 5. Design Specifications for Cyclone I (10 Micrometer)

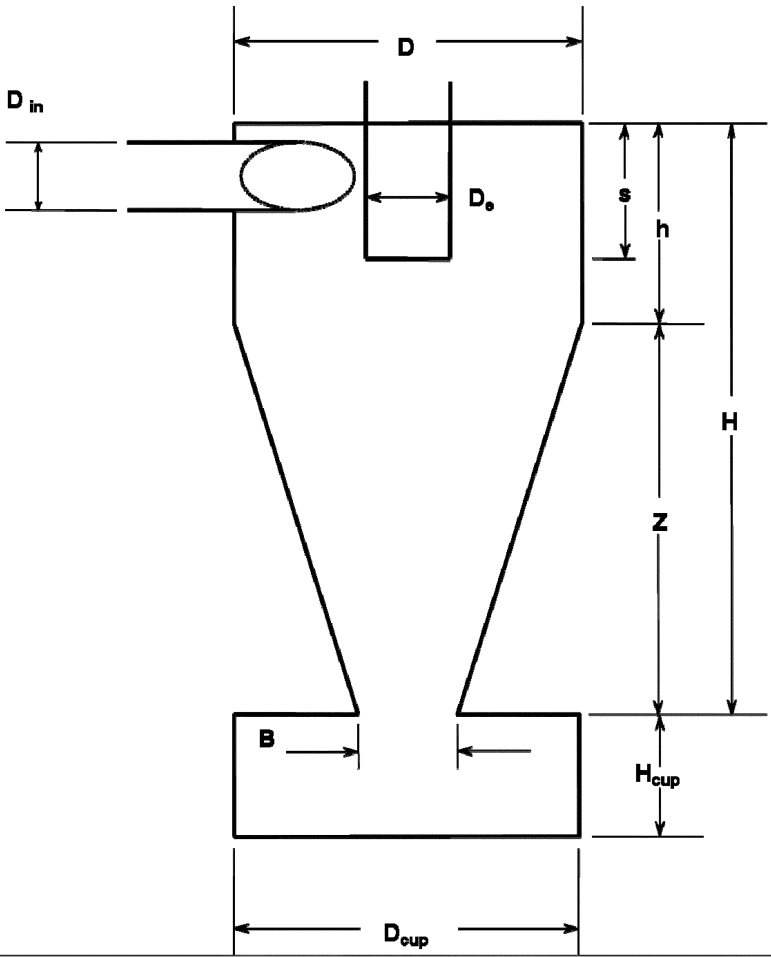

Cyclone IV (2.5 Micrometer)	Cyclone Interior Dimensions (cm ± 0.02 cm)									
	D_{in}	D	De	B	H	h	Z	S	H_{cup}	D_{cup}
	0.51	2.54	0.59	1.09	2.68	1.03	1.65	0.58	2.22	2.62

Figure 6. Design Specifications for Cyclone IV (2.5 Micrometer) Sizing Device

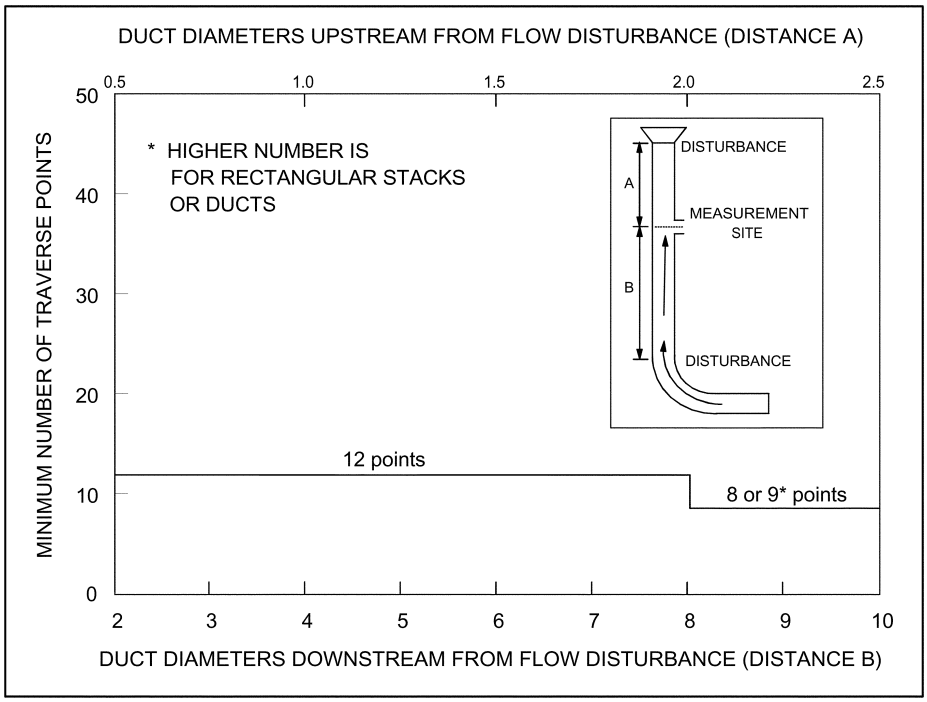

Figure 7. Minimum Number of Traverse Points for Preliminary Method 4 Traverse

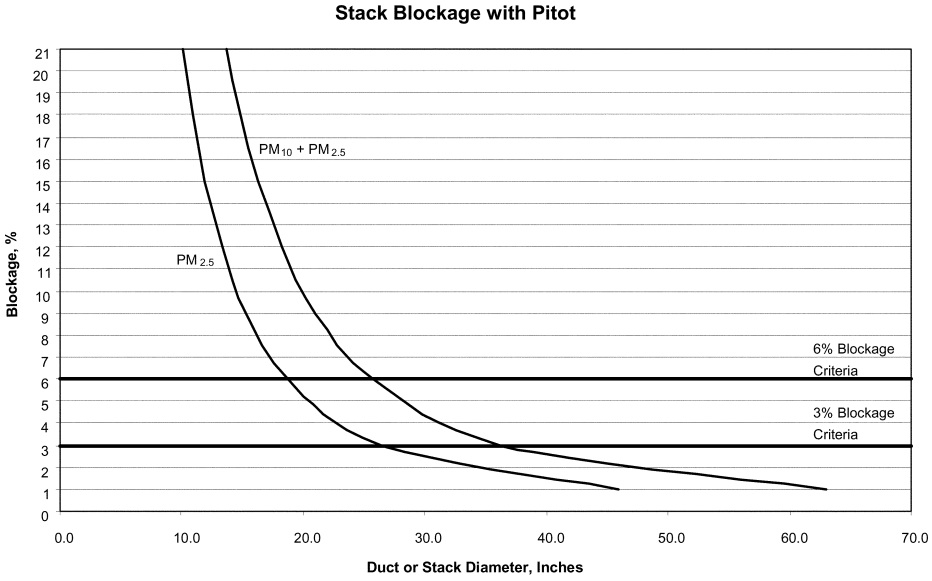

Figure 8. Gas Flow Blockage by the Sampling Heads with the Pitot Tube

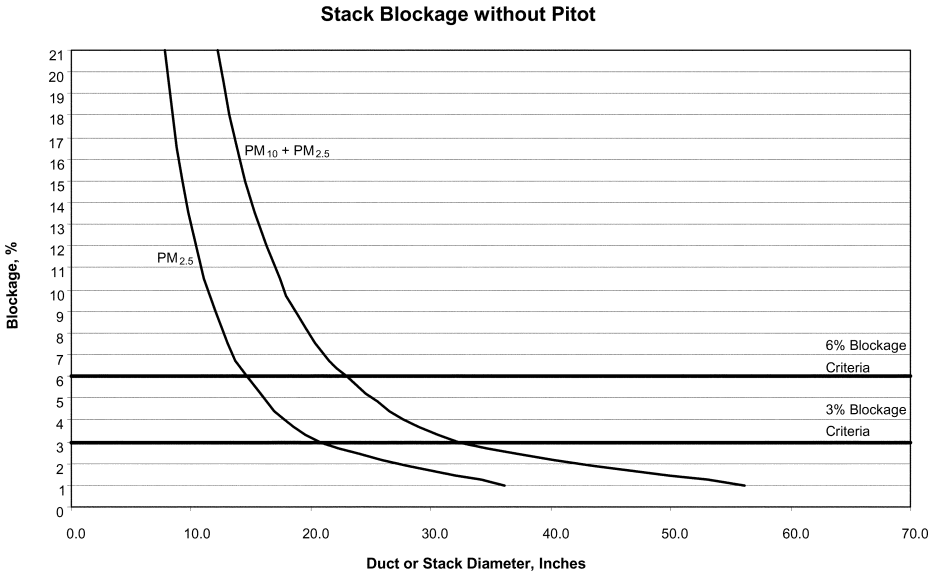

Figure 9. Gas Flow Blockage by the Sampling Heads without the Pitot Tube

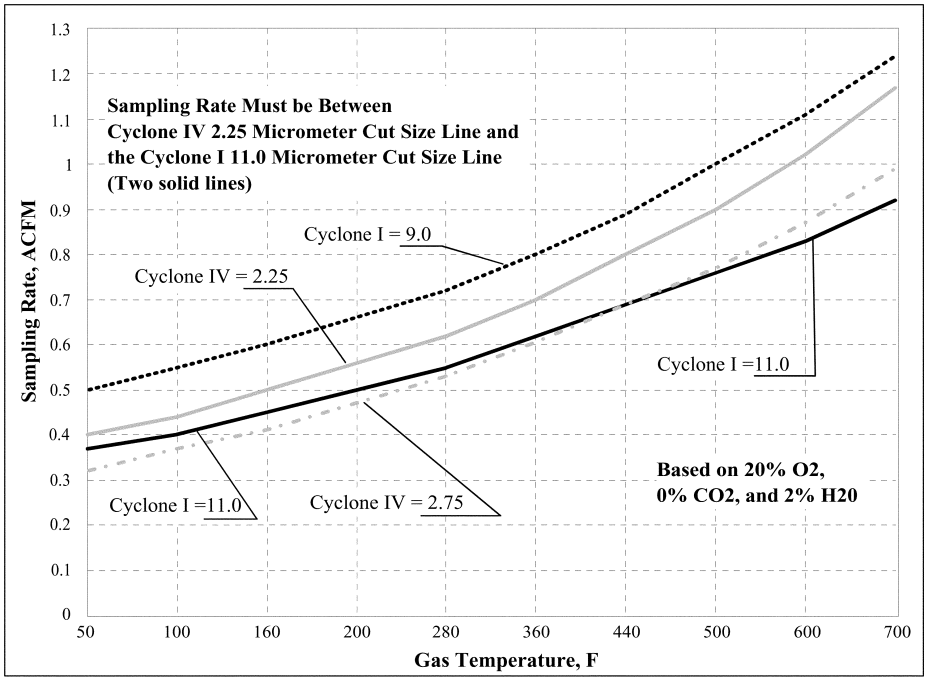

Figure 10. Acceptable Sampling Rate for Combined Cyclone Heads

METHOD 202—DRY IMPINGER METHOD FOR DETERMINING CONDENSABLE PARTICULATE EMISSIONS FROM STATIONARY SOURCES

1.0 Scope and Applicability

1.1 Scope. The U.S. Environmental Protection Agency (U.S. EPA or ''we'') developed this method to describe the procedures that the stack tester (''you'') must follow to measure condensable particulate matter (CPM) emissions from stationary sources. This method includes procedures for measuring both organic and inorganic CPM.

1.2 Applicability. This method addresses the equipment, preparation, and analysis necessary to measure only CPM. You can use this method only for stationary source emission measurements. You can use this method to measure CPM from stationary source emissions after filterable particulate matter (PM) has been removed. CPM is measured in the emissions after removal from the stack and after passing through a filter.

(a) If the gas filtration temperature exceeds 30 °C (85 °F) and you must measure both the filterable and condensable (material that condenses after passing through a filter) components of total primary (direct) PM emissions to the atmosphere, then you must combine the procedures in this method with the procedures in Method 201A of appendix M to this part for measuring filterable PM. However, if the gas filtration temperature never exceeds 30 °C (85 °F), then use of this method is not required to measure total primary PM.

(b) If Method 17 of appendix A–6 to part 60 is used in conjunction with this method and constant weight requirements for the in-stack filter cannot be met, the Method 17 filter and sampling nozzle rinse must be treated as described in Sections 8.5.4.4 and 11.2.1 of this method. (*See* Section 3.0 for a definition of constant weight.) Extracts resulting from the use of this procedure must be filtered to remove filter fragments before the filter is processed and weighed.

1.3 Responsibility. You are responsible for obtaining the equipment and supplies you will need to use this method. You should also develop your own procedures for following this method and any additional procedures to ensure accurate sampling and analytical measurements.

1.4 Additional Methods. To obtain reliable results, you should have a thorough knowledge of the following test methods that are found in appendices A–1 through A–3 and A–6 to part 60, and in appendix M to this part:

(a) Method 1—Sample and velocity traverses for stationary sources.

(b) Method 2—Determination of stack gas velocity and volumetric flow rate (Type S pitot tube).

(c) Method 3—Gas analysis for the determination of dry molecular weight.

(d) Method 4—Determination of moisture content in stack gases.

(e) Method 5—Determination of particulate matter emissions from stationary sources.

(f) Method 17—Determination of particulate matter emissions from stationary sources (in-stack filtration method).

(g) Method 201A—Determination of PM_{10} and $PM_{2.5}$ emissions from stationary sources (Constant sampling rate procedure).

(h) You will need additional test methods to measure filterable PM. You may use Method 5 (including Method 5A, 5D and 5I but not 5B, 5E, 5F, 5G, or 5H) of appendix A–3 to part 60, or Method 17 of appendix A–6 to part 60, or Method 201A of appendix M to this part to collect filterable PM from stationary sources with temperatures above 30 °C (85 °F) in conjunction with this method. However, if the gas filtration temperature never exceeds 30 °C (85 °F), then use of this method is not required to measure total primary PM.

1.5 Limitations. You can use this method to measure emissions in stacks that have entrained droplets only when this method is combined with a filterable PM test method that operates at high enough temperatures to cause water droplets sampled through the probe to become vaporous.

1.6 Conditions. You must maintain isokinetic sampling conditions to meet the requirements of the filterable PM test method used in conjunction with this method. You must sample at the required number of sampling points specified in Method 5 of appendix A–3 to part 60, Method 17 of appendix A–6 to part 60, or Method 201A of appendix M to this part. Also, if you are using this method as an alternative to a required performance test method, you must receive approval from the regulatory authority that established the requirement to use this test method prior to conducting the test.

2.0 Summary of Method

2.1 Summary. The CPM is collected in dry impingers after filterable PM has been collected on a filter maintained as specified in either Method 5 of appendix A–3 to part 60, Method 17 of appendix A–6 to part 60, or Method 201A of appendix M to this part. The organic and aqueous fractions of the impingers and an out-of-stack CPM filter are then taken to dryness and weighed. The total of the impinger fractions and the CPM filter represents the CPM. Compared to the version of Method 202 that was promulgated on December 17, 1991, this method eliminates the use of water as the collection media in impingers and includes the addition of a condenser followed by a water dropout impinger immediately after the final in-stack or heated filter. This method also includes the addition of one modified Greenburg Smith impinger (backup impinger) and a CPM filter following the water dropout impinger. Figure 1 of Section 18 presents the schematic of the sampling train configured with these changes.

2.1.1 Condensable PM. CPM is collected in the water dropout impinger, the modified Greenburg Smith impinger, and the CPM filter of the sampling train as described in this method. The impinger contents are purged with nitrogen immediately after sample collection to remove dissolved sulfur dioxide (SO_2) gases from the impinger. The CPM filter is extracted with water and hexane. The impinger solution is then extracted with hexane. The organic and aqueous fractions are dried and the residues are weighed. The total of the aqueous and organic fractions represents the CPM.

2.1.2 Dry Impinger and Additional Filter. The potential artifacts from SO_2 are reduced using a condenser and water dropout impinger to separate CPM from reactive gases. No water is added to the impingers prior to the start of sampling. To improve the collection efficiency of CPM, an additional filter (the ''CPM filter'') is placed between the second and third impingers.

3.0 Definitions

3.1 *Condensable PM (CPM)* means material that is vapor phase at stack conditions, but condenses and/or reacts upon cooling and dilution in the ambient air to form solid or liquid PM immediately after discharge from the stack. Note that all condensable PM is assumed to be in the $PM_{2.5}$ size fraction.

3.2 *Constant weight* means a difference of no more than 0.5 mg or one percent of total weight less tare weight, whichever is greater, between two consecutive weighings, with no less than six hours of desiccation time between weighings.

3.3 *Field Train Proof Blank*. A field train proof blank is recovered on site from a clean, fully-assembled sampling train prior to conducting the first emissions test.

3.4 *Filterable PM* means particles that are emitted directly by a source as a solid or liquid at stack or release conditions and captured on the filter of a stack test train.

3.5 *Primary PM* (also known as direct PM) means particles that enter the atmosphere as a direct emission from a stack or an open source. Primary PM comprises two components: filterable PM and condensable PM. These two PM components have no upper particle size limit.

3.6 *Primary $PM_{2.5}$* (also known as direct $PM_{2.5}$, total $PM_{2.5}$, $PM_{2.5}$, or combined filterable $PM_{2.5}$ and condensable PM) means PM with an aerodynamic diameter less than or equal to 2.5 micrometers. These solid particles are emitted directly from an air emissions source or activity, or are the gaseous emissions or liquid droplets from an air emissions source or activity that condense to form PM at ambient temperatures. Direct $PM_{2.5}$ emissions include elemental carbon, directly emitted organic carbon, directly emitted sulfate, directly emitted nitrate, and other inorganic particles (including but not limited to crustal material, metals, and sea salt).

3.7 *Primary PM_{10}* (also known as direct PM_{10}, total PM_{10}, PM_{10}, or the combination of filterable PM_{10} and condensable PM) means PM with an aerodynamic diameter equal to or less than 10 micrometers.

4.0 Interferences

[Reserved]

5.0 Safety

Disclaimer. Because the performance of this method may require the use of hazardous materials, operations, and equipment, you should develop a health and safety plan to ensure the safety of your employees who are on site conducting the particulate emission test. Your plan should conform with all applicable Occupational Safety and Health Administration, Mine Safety and Health Administration, and Department of Transportation regulatory requirements. Because of the unique situations at some facilities and because some facilities may have more stringent requirements than is required by State or federal laws, you may have to develop procedures to conform to the plant health and safety requirements.

6.0 Equipment and Supplies

The equipment used in the filterable particulate portion of the sampling train is described in Methods 5 and 17 of appendix A–1 through A–3 and A–6 to part 60 and Method 201A of appendix M to this part. The equipment used in the CPM portion of the train is described in this section.

6.1 Condensable Particulate Sampling Train Components. The sampling train for this method is used in addition to filterable particulate collection using Method 5 of appendix A–3 to part 60, Method 17 of appendix A–6 to part 60, or Method 201A of appendix M to this part. This method includes the following exceptions or additions:

6.1.1 Probe Extension and Liner. The probe extension between the filterable particulate filter and the condenser must be glass- or fluoropolymer-lined. Follow the specifications for the probe liner specified in Section 6.1.1.2 of Method 5 of appendix A–3 to part 60.

6.1.2 Condenser and Impingers. You must add the following components to the filterable particulate sampling train: A Method 23 type condenser as described in Section 2.1.2 of Method 23 of appendix A–8 to part 60, followed by a water dropout impinger or flask, followed by a modified Greenburg-Smith impinger (backup impinger) with an open tube tip as described in Section 6.1.1.8 of Method 5 of appendix A–3 to part 60.

6.1.3 CPM Filter Holder. The modified Greenburg-Smith impinger is followed by a filter holder that is either glass, stainless steel (316 or equivalent), or fluoropolymer-coated stainless steel. Commercial size filter holders are available depending on project requirements. Use a commercial filter holder capable of supporting 47 mm or greater diameter filters. Commercial size filter holders contain a fluoropolymer O-ring, stainless steel, ceramic or fluoropolymer filter support and a final fluoropolymer O-ring. A filter that meets the requirements specified in Section 7.1.1 may be placed behind the CPM filter to reduce the pressure drop across the CPM filter. This support filter is not part of the PM sample and is not recovered with the CPM filter. At the exit of the CPM filter, install a fluoropolymer-coated or stainless steel encased thermocouple that is in contact with the gas stream.

6.1.4 Long Stem Impinger Insert. You will need a long stem modified Greenburg Smith impinger insert for the water dropout impinger to perform the nitrogen purge of the sampling train.

6.2 Sample Recovery Equipment.

6.2.1 Condensable PM Recovery. Use the following equipment to quantitatively determine the amount of CPM recovered from the sampling train.

(a) Nitrogen purge line. You must use inert tubing and fittings capable of delivering at least 14 liters/min of nitrogen gas to the impinger train from a standard gas cylinder (*see* Figures 2 and 3 of Section 18). You may use standard 0.6 centimeters (¼ inch) tubing and compression fittings in conjunction with an adjustable pressure regulator and needle valve.

(b) Rotameter. You must use a rotameter capable of measuring gas flow up to 20 L/min. The rotameter must be accurate to five percent of full scale.

(c) Nitrogen gas purging system. Compressed ultra-pure nitrogen, regulator, and filter must be capable of providing at least 14 L/min purge gas for one hour through the sampling train.

(d) Amber glass bottles (500 ml).

6.2.2 Analysis Equipment. The following equipment is necessary for CPM sample analysis:

(a) Separatory Funnel. Glass, 1 liter.

(b) Weighing Tins. 50 ml. Glass evaporation vials, fluoropolymer beaker liners, or aluminum weighing tins can be used.

(c) Glass Beakers. 300 to 500 ml.

(d) Drying Equipment. A desiccator containing anhydrous calcium sulfate that is maintained below 10 percent relative humidity, and a hot plate or oven equipped with temperature control.

(e) Glass Pipets. 5 ml.

(f) Burette. Glass, 0 to 100 ml in 0.1 ml graduations.

(g) Analytical Balance. Analytical balance capable of weighing at least 0.0001 g (0.1 mg).

(h) pH Meter or Colormetric pH Indicator. The pH meter or colormetric pH indicator (e.g., phenolphthalein) must be capable of determining the acidity of liquid within 0.1 pH units.

(i) Sonication Device. The device must have a minimum sonication frequency of 20 kHz and be approximately four to six inches deep to accommodate the sample extractor tube.

(j) Leak-Proof Sample Containers. Containers used for sample and blank recovery must not contribute more than 0.05 mg of residual mass to the CPM measurements.

(k) Wash bottles. Any container material is acceptable, but wash bottles used for sample and blank recovery must not contribute more than 0.1 mg of residual mass to the CPM measurements.

7.0 Reagents and Standards

7.1 Sample Collection. To collect a sample, you will need a CPM filter, crushed ice, and silica gel. You must also have water and nitrogen gas to purge the sampling train. You will find additional information on each of these items in the following summaries.

7.1.1 CPM Filter. You must use a nonreactive, nondisintegrating polymer filter that does not have an organic binder and does not contribute more than 0.5 mg of residual mass to the CPM measurements. The CPM filter must also have an efficiency of at least 99.95 percent (less than 0.05 percent penetration) on 0.3 micrometer dioctyl phthalate particles. You may use test data from the supplier's quality control program to document the CPM filter efficiency.

7.1.2 Silica Gel. Use an indicating-type silica gel of six to 16 mesh. You must obtain approval of the Administrator for other types of desiccants (equivalent or better) before you use them. Allow the silica gel to dry for two hours at 175 °C (350 °F) if it is being reused. You do not have to dry new silica gel if the indicator shows the silica gel is active for moisture collection.

7.1.3 Water. Use deionized, ultra-filtered water that contains 1.0 parts per million by weight (ppmw) (1 mg/L) residual mass or less to recover and extract samples.

7.1.4 Crushed Ice. Obtain from the best readily available source.

7.1.5 Nitrogen Gas. Use Ultra-High Purity compressed nitrogen or equivalent to purge the sampling train. The compressed nitrogen you use to purge the sampling train must contain no more than 1 parts per million by volume (ppmv) oxygen, 1 ppmv total hydrocarbons as carbon, and 2 ppmv moisture. The compressed nitrogen must not contribute more than 0.1 mg of residual mass per purge.

7.2 Sample Recovery and Analytical Reagents. You will need acetone, hexane, anhydrous calcium sulfate, ammonia hydroxide, and deionized water for the sample recovery and analysis. Unless otherwise indicated, all reagents must conform to the specifications established by the Committee on Analytical Reagents of the American Chemical Society. If such specifications are not available, then use the best available grade. Additional information on each of these items is in the following paragraphs:

7.2.1 Acetone. Use acetone that is stored in a glass bottle. Do not use acetone from a metal container because it normally produces a high residual mass in the laboratory and field reagent blanks. You must use acetone that has a blank value less than 1.0 ppmw (0.1 mg/100 g) residue.

7.2.2 Hexane, American Chemical Society grade. You must use hexane that has a blank residual mass value less than 1.0 ppmw (0.1 mg/100 g) residue.

7.2.3 Water. Use deionized, ultra-filtered water that contains 1 ppmw (1 mg/L) residual mass or less to recover material caught in the impinger.

7.2.4 Condensable Particulate Sample Desiccant. Use indicating-type anhydrous calcium sulfate to desiccate water and organic extract residue samples prior to weighing.

7.2.5 Ammonium Hydroxide. Use National Institute of Standards and Technology-traceable or equivalent (0.1 N) NH_4OH.

7.2.6 Standard Buffer Solutions. Use one buffer solution with a neutral pH and a second buffer solution with an acid pH of no less than 4.

8.0 Sample Collection, Preservation, Storage, and Transport

8.1 Qualifications. This is a complex test method. To obtain reliable results, you should be trained and experienced with in-stack filtration systems (such as, cyclones, impactors, and thimbles) and impinger and moisture train systems.

8.2 Preparations. You must clean all glassware used to collect and analyze samples prior to field tests as described in Section 8.4 prior to use. Cleaned glassware must be used at the start of each new source category tested at a single facility. Analyze laboratory reagent blanks (water, acetone, and hexane) before field tests to verify low blank concentrations. Follow the pretest preparation instructions in Section 8.1 of Method 5.

8.3 Site Setup. You must follow the procedures required in Methods 5, 17, or 201A, whichever is applicable to your test requirements including:

(a) Determining the sampling site location and traverse points.

(b) Calculating probe/cyclone blockage (as appropriate).

(c) Verifying the absence of cyclonic flow.

(d) Completing a preliminary velocity profile, and selecting a nozzle(s) and sampling rate.

8.3.1 Sampling Site Location. Follow the standard procedures in Method 1 of appendix A–1 to part 60 to select the appropriate sampling site. Choose a location that maximizes the distance from upstream and downstream flow disturbances.

8.3.2 Traverse points. Use the required number of traverse points at any location, as found in Methods 5, 17, or 201A, whichever is applicable to your test requirements. You must prevent the disturbance and capture of any solids accumulated on the inner wall surfaces by maintaining a 1-inch distance from the stack wall (0.5 inch for sampling locations less than 24 inches in diameter).

8.4 Sampling Train Preparation. A schematic of the sampling train used in this method is shown in Figure 1 of Section 18. All glassware that is used to collect and analyze samples must be cleaned prior to the test with soap and water, and rinsed using tap water, deionized water, acetone, and finally, hexane. It is important to completely remove all silicone grease from areas that will be exposed to the hexane rinse during sample recovery. After cleaning, you must bake glassware at 300 °C for six hours prior to beginning tests at each source category sampled at a facility. As an alternative to baking glassware, a field train proof blank, as specified in Section 8.5.4.10, can be performed on the sampling train glassware that is used to collect CPM samples. Prior to each sampling run, the train glassware used to collect condensable PM must be rinsed thoroughly with deionized, ultra-filtered water that that contains 1 ppmw (1 mg/L) residual mass or less.

8.4.1 Condenser and Water Dropout Impinger. Add a Method 23 type condenser and a condensate dropout impinger without bubbler tube after the final probe extension that connects the in-stack or out-of-stack hot filter assembly with the CPM sampling train. The Method 23 type stack gas condenser is described in Section 2.1.2 of Method 23. The condenser must be capable of cooling the stack gas to less than or equal to 30 °C (85 °F).

8.4.2 Backup Impinger. The water dropout impinger is followed by a modified Greenburg Smith impinger (backup impinger) with no taper (see Figure 1 of Section 18). Place the water dropout and backup impingers in an insulated box with water at less than or equal to 30 °C (less than or equal to 85 °F). At the start of the tests, the water dropout and backup impingers must be clean, without any water or reagent added.

8.4.3 CPM Filter. Place a filter holder with a filter meeting the requirements in Section 7.1.1 after the backup impinger. The connection between the CPM filter and the moisture trap impinger must include a thermocouple fitting that provides a leak-free seal between the thermocouple and the stack gas. (NOTE: A thermocouple well is not sufficient for this purpose because the fluoropolymer- or steel-encased thermocouple must be in contact with the sample gas.)

8.4.4 Moisture Traps. You must use a modified Greenburg-Smith impinger containing 100 ml of water, or the alternative described in Method 5 of appendix A–3 to part 60, followed by an impinger containing silica gel to collect moisture that passes through the CPM filter. You must maintain the gas temperature below 20 °C (68 °F) at the exit of the moisture traps.

8.4.5 Silica Gel Trap. Place 200 to 300 g of silica gel in each of several air-tight containers. Weigh each container, including silica gel, to the nearest 0.5 g, and record this weight on the filterable particulate data sheet. As an alternative, the silica gel need not be preweighed, but may be weighed directly in its impinger or sampling holder just prior to train assembly.

8.4.6 Leak-Check (Pretest). Use the procedures outlined in Method 5 of appendix A–3 to part 60, Method 17 of appendix A–6 to part 60, or Method 201A of appendix M to this part as appropriate to leak check the entire sampling system. Specifically, perform the following procedures:

8.4.6.1 Sampling train. You must pretest the entire sampling train for leaks. The pretest leak-check must have a leak rate of not more than 0.02 actual cubic feet per minute or 4 percent of the average sample flow during the test run, whichever is less. Additionally, you must conduct the leak-check at a vacuum equal to or greater than the vacuum anticipated during the test run. Enter the leak-check results on the field test data sheet for the filterable particulate method. (NOTE: Conduct leak-checks during port changes only as allowed by the filterable particulate method used with this method.)

8.4.6.2 Pitot tube assembly. After you leak-check the sample train, perform a leak-check of the pitot tube assembly. Follow the procedures outlined in Section 8.4.1 of Method 5.

8.5 Sampling Train Operation. Operate the sampling train as described in the filterable particulate sampling method (*i.e.*, Method 5 of appendix A–3 to part 60, Method 17 of appendix A–6 to part 60, or Method 201A of appendix M to this part) with the following additions or exceptions:

8.5.1 Impinger and CPM Filter Assembly.

8.5.1.1 Monitor the moisture condensation in the knockout and backup impingers. If the accumulated water from moisture condensation overwhelms the knockout impinger, i.e., the water level is more than approximately one-half the capacity of the knockout impinger, or if water accumulates in the backup impinger sufficient to cover the impinger insert tip, then you may interrupt the sampling run, recover and weigh the moisture accumulated in the knockout and backup impinger, reassemble and leak check the sampling train, and resume the sampling run. You must purge the water collected during the test interruption as soon as practical following the procedures in Section 8.5.3.

8.5.1.2 You must include the weight or volume of the moisture in your moisture calculation and you must combine the recovered water with the appropriate sample fraction for subsequent CPM analysis.

8.5.1.3 Use the field data sheet for the filterable particulate method to record the CPM filter temperature readings at the beginning of each sample time increment and when sampling is halted. Maintain the CPM filter greater than 20 °C (greater than 65 °F) but less than or equal to 30 °C (less than or equal to 85 °F) during sample collection. (Note: Maintain the temperature of the CPM filter assembly as close to 30 °C (85 °F) as feasible.)

8.5.2 Leak-Check Probe/Sample Train Assembly (Post-Test). Conduct the leak rate check according to the filterable particulate sampling method used during sampling. If required, conduct the leak-check at a vacuum equal to or greater than the maximum vacuum achieved during the test run. If the leak rate of the sampling train exceeds 0.02 actual cubic feet per minute or four percent of the average sampling rate during the test run (whichever is less), then the run is invalid and you must repeat it.

8.5.3 Post-Test Nitrogen Purge. As soon as possible after the post-test leak-check, detach the probe, any cyclones, and in-stack or hot filters from the condenser and impinger train. If no water was collected before the CPM filter, then you may skip the remaining purge steps and proceed with sample recovery (see Section 8.5.4). You may purge the CPM sampling train using the sampling system meter box and vacuum pump or by passing nitrogen through the train under pressure. For either type of purge, you must first attach the nitrogen supply line to a purged inline filter.

8.5.3.1 If you choose to conduct a pressurized nitrogen purge at the completion of CPM sample collection, you may purge the entire CPM sample collection train from the condenser inlet to the CPM filter holder outlet or you may quantitatively transfer the water collected in the condenser and the water dropout impinger to the backup impinger and purge only the backup impinger and the CPM filter. You must measure the water in the knockout and backup impingers and record the volume or weight as part of the moisture collected during sampling as specified in Section 8.5.3.4.

8.5.3.1.1 If you choose to conduct a purge of the entire CPM sampling train, you must replace the short stem impinger insert in the knock out impinger with a standard modified Greenburg Smith impinger insert.

8.5.3.1.2 If you choose to combine the knockout and backup impinger catch prior to purge, you must purge the backup impinger and CPM filter holder.

8.5.3.1.3 If the tip of the impinger insert does not extend below the water level (including the water transferred from the first impinger if this option was chosen), you must add a measured amount of degassed, deionized ultra-filtered water that contains 1 ppmw (1 mg/L) residual mass or less until the impinger tip is at least 1 centimeter below the surface of the water. You must record the amount of water added to the water dropout impinger (Vp)(see Figure 4 of Section 18) to correct the moisture content of the effluent gas. (Note: Prior to use, water must be degassed using a nitrogen purge bubbled through the water for at least 15 minutes to remove dissolved oxygen).

8.5.3.1.4 To perform the nitrogen purge using positive pressure nitrogen flow, you must start with no flow of gas through the clean purge line and fittings. Connect the filter outlet to the input of the impinger train and disconnect the vacuum line from the exit of the silica moisture collection impinger (see Figure 3 of Section 18). You may purge only the CPM train by disconnecting the moisture train components if you measure moisture in the field prior to the nitrogen purge. You must increase the nitrogen flow gradually to avoid over-pressurizing the impinger array. You must purge the CPM train at a minimum of 14 liters per minute for at least one hour. At the conclusion of the purge, turn off the nitrogen delivery system.

8.5.3.2 If you choose to conduct a nitrogen purge on the complete CPM sampling train using the sampling system meter box and vacuum pump, replace the short stem impinger insert with a modified Greenberg Smith impinger insert. The impinger tip length must extend below the water level in the impinger catch.

(a) You must conduct the purge on the complete CPM sampling train starting at the inlet of the condenser. If insufficient water was collected, you must add a measured amount of degassed, deionized ultra-filtered water that contains 1 ppmw (1 mg/L) residual mass or less until the impinger tip is at least 1 centimeter below the surface of the water. You must record the amount of water added

to the water dropout impinger (V_p) (see Figure 4 of Section 18) to correct the moisture content of the effluent gas. *(Note:* Prior to use, water must be degassed using a nitrogen purge bubbled through the water for at least 15 minutes to remove dissolved oxygen).

(b) You must start the purge using the sampling train vacuum pump with no flow of gas through the clean purge line and fittings. Connect the filter outlet to the input of the impinger train (see Figure 2 of Section 18). To avoid over- or under-pressurizing the impinger array, slowly commence the nitrogen gas flow through the line while simultaneously opening the meter box pump valve(s). Adjust the pump bypass and/or nitrogen delivery rates to obtain the following conditions: 14 liters/min or ΔH@ and a positive overflow rate through the rotameter of less than 2 liters/min. The presence of a positive overflow rate guarantees that the nitrogen delivery system is operating at greater than ambient pressure and prevents the possibility of passing ambient air (rather than nitrogen) through the impingers. Continue the purge under these conditions for at least one hour, checking the rotameter and ΔH@ value(s) at least every 15 minutes. At the conclusion of the purge, simultaneously turn off the delivery and pumping systems.

8.5.3.3 During either purge procedure, continue operation of the condenser recirculation pump, and heat or cool the water surrounding the first two impingers to maintain the gas temperature measured at the exit of the CPM filter greater than 20 °C (greater than 65 °F), but less than or equal to 30 °C (less than or equal to 85 °F). If the volume of liquid collected in the moisture traps has not been determined prior to conducting the nitrogen purge, maintain the temperature of the moisture traps following the CPM filter to prevent removal of moisture during the purge. If necessary, add more ice during the purge to maintain the gas temperature measured at the exit of the silica gel impinger below 20 °C (68 °F). Continue the purge under these conditions for at least one hour, checking the rotameter and ΔH@ value(s) periodically. At the conclusion of the purge, simultaneously turn off the delivery and pumping systems.

8.5.3.4 Weigh the liquid, or measure the volume of the liquid collected in the dropout, impingers, and silica trap if this has not been done prior to purging the sampling train. Measure the liquid in the water dropout impinger to within 1 ml using a clean graduated cylinder or by weighing it to within 0.5 g using a balance. Record the volume or weight of liquid present to be used to calculate the moisture content of the effluent gas in the field log notebook.

8.5.3.5 If a balance is available in the field, weigh the silica impinger to within 0.5 g. Note the color of the indicating silica gel in the last impinger to determine whether it has been completely spent, and make a notation of its condition in the field log notebook.

8.5.4 Sample Recovery.

8.5.4.1 *Recovery of filterable PM.* Recovery of filterable PM involves the quantitative transfer of particles according to the filterable particulate sampling method (*i.e.*, Method 5 of appendix A–3 to part 60, Method 17 of appendix A–6 to part 60, or Method 201A of appendix M to this part).

8.5.4.2 *CPM Container #1, Aqueous liquid impinger contents.* Quantitatively transfer liquid from the dropout and the backup impingers prior to the CPM filter into a clean, leak-proof container labeled with test identification and ''CPM Container #1, Aqueous Liquid Impinger Contents.'' Rinse all sampling train components including the back half of the filterable PM filter holder, the probe extension, condenser, each impinger and the connecting glassware, and the front half of the CPM filter housing twice with water. Recover the rinse water, and add it to CPM Container #1. Mark the liquid level on the container.

8.5.4.3 *CPM Container #2, Organic rinses.* Follow the water rinses of the probe extension, condenser, each impinger and all of the connecting glassware and front half of the CPM filter with an acetone rinse. Recover the acetone rinse into a clean, leak-proof container labeled with test identification and ''CPM Container #2, Organic Rinses.'' Then repeat the entire rinse procedure with two rinses of hexane, and save the hexane rinses in the same container as the acetone rinse (CPM Container #2). Mark the liquid level on the jar.

8.5.4.4 *CPM Container #3, CPM filter sample.* Use tweezers and/or clean disposable surgical gloves to remove the filter from the CPM filter holder. Place the filter in the Petri dish labeled with test identification and ''CPM Container #3, Filter Sample.''

8.5.4.5 *CPM Container #4, Cold impinger water.* You must weigh or measure the volume of the contents of CPM Container #4 either in the field or during sample analysis (*see* Section 11.2.4). If the water from the cold impinger has been weighed in the field, it can be discarded. Otherwise, quantitatively transfer liquid from the cold impinger that follows the CPM filter into a clean, leak-proof container labeled with test identification and ''CPM Container #4, Cold Water Impinger.'' Mark the liquid level on the container. CPM Container #4 holds the remainder of the liquid water from the emission gases.

8.5.4.6 *CPM Container #5, Silica gel absorbent.* You must weigh the contents of CPM Container #5 in the field or during sample analysis (see Section 11.2.5). If the silica gel has been weighed in the field to measure water content, then it can be discarded or recovered for reuse. Otherwise, transfer the

silica gel to its original container labeled with test identification and ''CPM Container #5, Silica Gel Absorbent'' and seal. You may use a funnel to make it easier to pour the silica gel without spilling. You may also use a rubber policeman as an aid in removing the silica gel from the impinger. It is not necessary to remove the small amount of silica gel dust particles that may adhere to the impinger wall and are difficult to remove. Since the gain in weight is to be used for moisture calculations, do not use any water or other liquids to transfer the silica gel.

8.5.4.7 *CPM Container #6, Acetone field reagent blank*. Take approximately 200 ml of the acetone directly from the wash bottle you used for sample recovery and place it in a clean, leak-proof container labeled with test identification and ''CPM Container #6, Acetone Field Reagent Blank'' (*see* Section 11.2.6 for analysis). Mark the liquid level on the container. Collect one acetone field reagent blank from the lot(s) of solvent used for the test.

8.5.4.8 *CPM Container #7, Water field reagent blank*. Take approximately 200 ml of the water directly from the wash bottle you used for sample recovery and place it in a clean, leak-proof container labeled with test identification and ''CPM Container #7, Water Field Reagent Blank'' (*see* Section 11.2.7 for analysis). Mark the liquid level on the container. Collect one water field reagent blank from the lot(s) of water used for the test.

8.5.4.9 *CPM Container #8, Hexane field reagent blank*. Take approximately 200 ml of the hexane directly from the wash bottle you used for sample recovery and place it in a clean, leak-proof container labeled with test identification and ''CPM Container #8, Hexane Field Reagent Blank'' (*see* Section 11.2.8 for analysis). Mark the liquid level on the container. Collect one hexane field reagent blank from the lot(s) of solvent used for the test.

8.5.4.10 *Field train proof blank*. If you did not bake the sampling train glassware as specified in Section 8.4, you must conduct a field train proof blank as specified in Sections 8.5.4.11 and 8.5.4.12 to demonstrate the cleanliness of sampling train glassware.

8.5.4.11 *CPM Container #9, Field train proof blank, inorganic rinses*. Prior to conducting the emission test, rinse the probe extension, condenser, each impinger and the connecting glassware, and the front half of the CPM filter housing twice with water. Recover the rinse water and place it in a clean, leak-proof container labeled with test identification and ''CPM Container #9, Field Train Proof Blank, Inorganic Rinses.'' Mark the liquid level on the container.

8.5.4.12 *CPM Container #10, Field train proof blank, organic rinses*. Follow the water rinse of the probe extension, condenser, each impinger and the connecting glassware, and the front half of the CPM filter housing with an acetone rinse. Recover the acetone rinse into a clean, leak-proof container labeled with test identification and ''CPM Container #10, Field Train Proof Blank, Organic Rinses.'' Then repeat the entire rinse procedure with two rinses of hexane and save the hexane rinses in the same container as the acetone rinse (CPM Container #10). Mark the liquid level on the container.

8.5.5 Transport procedures. Containers must remain in an upright position at all times during shipping. You do not have to ship the containers under dry or blue ice. However, samples must be maintained at or below 30 °C (85 °F) during shipping.

9.0 Quality Control

9.1 Daily Quality Checks. You must perform daily quality checks of field log notebooks and data entries and calculations using data quality indicators from this method and your site-specific test plan. You must review and evaluate recorded and transferred raw data, calculations, and documentation of testing procedures. You must initial or sign log notebook pages and data entry forms that were reviewed.

9.2 Calculation Verification. Verify the calculations by independent, manual checks. You must flag any suspect data and identify the nature of the problem and potential effect on data quality. After you complete the test, prepare a data summary and compile all the calculations and raw data sheets.

9.3 Conditions. You must document data and information on the process unit tested, the particulate control system used to control emissions, any non-particulate control system that may affect particulate emissions, the sampling train conditions, and weather conditions. Discontinue the test if the operating conditions may cause non-representative particulate emissions.

9.4 Field Analytical Balance Calibration Check. Perform calibration check procedures on field analytical balances each day that they are used. You must use National Institute of Standards and Technology (NIST)-traceable weights at a mass approximately equal to the weight of the sample plus container you will weigh.

9.5 Glassware. Use class A volumetric glassware for titrations, or calibrate your equipment against NIST-traceable glassware.

9.6 Laboratory Analytical Balance Calibration Check. Check the calibration of your laboratory analytical balance each day that you weigh CPM samples. You must use NIST Class S weights at a mass approximately equal to the weight of the sample plus container you will weigh.

9.7 Laboratory Reagent Blanks. You should run blanks of water, acetone, and hexane used for field recovery and sample analysis. Analyze at least one sample (150 ml minimum) of each lot of reagents that you

plan to use for sample recovery and analysis before you begin testing. These blanks are not required by the test method, but running blanks before field use is advisable to verify low blank concentrations, thereby reducing the potential for a high field blank on test samples.

9.8 Field Reagent Blanks. You should run at least one field reagent blank of water, acetone, and hexane you use for field recovery. These blanks are not required by the test method, but running independent field reagent blanks is advisable to verify that low blank concentrations were maintained during field solvent use and demonstrate that reagents have not been contaminated during field tests.

9.9 Field Train Proof Blank. If you are not baking glassware as specified in Section 8.4, you must recover a minimum of one field train proof blank for the sampling train used for testing each new source category at a single facility. You must assemble the sampling train as it will be used for testing. You must recover the field train proof blank samples as described in Section 8.5.4.11 and 8.5.4.12.

9.10 Field Train Recovery Blank. You must recover a minimum of one field train blank for each source category tested at the facility. You must recover the field train blank after the first or second run of the test. You must assemble the sampling train as it will be used for testing. Prior to the purge, you must add 100 ml of water to the first impinger and record this data on Figure 4. You must purge the assembled train as described in Sections 8.5.3.2 and 8.5.3.3. You must recover field train blank samples as described in Section 8.5.4. From the field sample weight, you will subtract the condensable particulate mass you determine with this blank train or 0.002 g (2.0 mg), whichever is less.

10.0 Calibration and Standardization

Maintain a field log notebook of all condensable particulate sampling and analysis calibrations. Include copies of the relevant portions of the calibration and field logs in the final test report.

10.1 Thermocouple Calibration. You must calibrate the thermocouples using the procedures described in Section 10.3.1 of Method 2 of appendix A–1 to part 60 or Alternative Method 2, Thermocouple Calibration (ALT–011) (*http://www.epa.gov/ttn/emc*). Calibrate each temperature sensor at a minimum of three points over the anticipated range of use against a NIST-traceable thermometer. Alternatively, a reference thermocouple and potentiometer calibrated against NIST standards can be used.

10.2 Ammonium Hydroxide. The 0.1 N NH_4OH used for titrations in this method is made as follows: Add 7 ml of concentrated (14.8 M) NH_4OH to 1 liter of water. Standardize against standardized 0.1 N H_2SO_4, and calculate the exact normality using a procedure parallel to that described in Section 10.5 of Method 6 of appendix A–4 to 40 CFR part 60. Alternatively, purchase 0.1 N NH_4OH that has been standardized against a NIST reference material. Record the normality on the CPM Work Table (*see* Figure 6 of Section 18).

11.0 Analytical Procedures

11.1 Analytical Data Sheets. (a) Record the filterable particulate field data on the appropriate (*i.e.*, Method 5, 17, or 201A) analytical data sheets. Alternatively, data may be recorded electronically using software applications such as the Electronic Reporting Tool available at *http://www.epa.gov/ttn/chief/ert/ert_tool.html*. Record the condensable particulate data on the CPM Work Table (*see* Figure 6 of Section 18).

(b) Measure the liquid in all containers either volumetrically to ±1 ml or gravimetrically to ±0.5 g. Confirm on the filterable particulate analytical data sheet whether leakage occurred during transport. If a noticeable amount of leakage has occurred, either void the sample or use methods (subject to the approval of the Administrator) to correct the final results.

11.2 Condensable PM Analysis. See the flow chart in Figure 7 of Section 18 for the steps to process and combine fractions from the CPM train.

11.2.1 Container #3, CPM Filter Sample. If the sample was collected by Method 17 or Method 201A with a stack temperature below 30 °C (85 °F), transfer the filter and any loose PM from the sample container to a tared glass weighing dish. (See Section 3.0 for a definition of constant weight.) Desiccate the sample for 24 hours in a desiccator containing anhydrous calcium sulfate. Weigh to a constant weight and report the results to the nearest 0.1 mg. [Note: In-stack filter samples collected at 30 °C (85 °F) may include both filterable insoluble particulate and condensable particulate. The nozzle and front half wash and filter collected at or below 30 °C (85 °F) may not be heated and must be maintained at or below 30 °C (85 °F).] If the sample was collected by Method 202, extract the CPM filter as follows:

11.2.1.1 Extract the water soluble (aqueous or inorganic) CPM from the CPM filter by folding the filter in quarters and placing it into a 50-ml extraction tube. Add sufficient deionized, ultra-filtered water to cover the filter (e.g., 10 ml of water). Place the extractor tube into a sonication bath and extract the water-soluble material for a minimum of two minutes. Combine the aqueous extract with the contents of Container #1. Repeat this extraction step twice for a total of three extractions.

11.2.1.2 Extract the organic soluble CPM from the CPM filter by adding sufficient

hexane to cover the filter (e.g., 10 ml of hexane). Place the extractor tube into a sonication bath and extract the organic soluble material for a minimum of two minutes. Combine the organic extract with the contents of Container #2. Repeat this extraction step twice for a total of three extractions.

11.2.2 CPM Container #1, Aqueous Liquid Impinger Contents. Analyze the water soluble CPM in Container #1 as described in this section. Place the contents of Container #1 into a separatory funnel. Add approximately 30 ml of hexane to the funnel, mix well, and pour off the upper organic phase. Repeat this procedure twice with 30 ml of hexane each time combining the organic phase from each extraction. Each time, leave a small amount of the organic/hexane phase in the separatory funnel, ensuring that no water is collected in the organic phase. This extraction should yield about 90 ml of organic extract. Combine the organic extract from Container #1 with the organic train rinse in Container #2.

11.2.3 CPM Container #2, Organic Fraction Weight Determination. Analyze the organic soluble CPM in Container #2 as described in this section. Place the organic phase in a clean glass beaker. Evaporate the organic extract at room temperature (not to exceed 30 °C (85 °F)) and pressure in a laboratory hood to not less than 10 ml. Quantitatively transfer the beaker contents to a clean 50-ml pre-tared weighing tin and evaporate to dryness at room temperature (not to exceed 30 °C (85 °F)) and pressure in a laboratory hood. Following evaporation, desiccate the organic fraction for 24 hours in a desiccator containing anhydrous calcium sulfate. Weigh at intervals of at least six hours to a constant weight (*i.e.*, less than or equal to 0.5 mg change from previous weighing), and report results to the nearest 0.1 mg on the CPM Work Table (*see* Figure 6 of Section 18).

11.2.4 CPM Container #4, Cold Impinger Water. If the amount of water has not been determined in the field, note the level of liquid in the container, and confirm on the filterable particulate analytical data sheet whether leakage occurred during transport. If a noticeable amount of leakage has occurred, either void the sample or use methods (subject to the approval of the Administrator) to correct the final results. Measure the liquid in Container #4 either volumetrically to ±1 ml or gravimetrically to ±0.5 g, and record the volume or weight on the filterable particulate analytical data sheet of the filterable PM test method.

11.2.5 CPM Container #5, Silica Gel Absorbent. Weigh the spent silica gel (or silica gel plus impinger) to the nearest 0.5 g using a balance. This step may be conducted in the field. Record the weight on the filterable particulate analytical data sheet of the filterable PM test method.

11.2.6 Container #6, Acetone Field Reagent Blank. Use 150 ml of acetone from the blank container used for this analysis. Transfer 150 ml of the acetone to a clean 250-ml beaker. Evaporate the acetone at room temperature (not to exceed 30 °C (85 °F)) and pressure in a laboratory hood to approximately 10 ml. Quantitatively transfer the beaker contents to a clean 50-ml pre-tared weighing tin, and evaporate to dryness at room temperature (not to exceed 30 °C (85 °F)) and pressure in a laboratory hood. Following evaporation, desiccate the residue for 24 hours in a desiccator containing anhydrous calcium sulfate. Weigh at intervals of at least six hours to a constant weight (*i.e.*, less than or equal to 0.5 mg change from previous weighing), and report results to the nearest 0.1 mg on Figure 4 of Section 19.

11.2.7 Water Field Reagent Blank, Container #7. Use 150 ml of the water from the blank container for this analysis. Transfer the water to a clean 250-ml beaker, and evaporate to approximately 10 ml liquid in the oven at 105 °C. Quantitatively transfer the beaker contents to a clean 50 ml pre-tared weighing tin and evaporate to dryness at room temperature (not to exceed 30 °C (85 °F)) and pressure in a laboratory hood. Following evaporation, desiccate the residue for 24 hours in a desiccator containing anhydrous calcium sulfate. Weigh at intervals of at least six hours to a constant weight (*i.e.*, less than or equal to 0.5 mg change from previous weighing) and report results to the nearest 0.1 mg on Figure 4 of Section 18.

11.2.8 Hexane Field Reagent Blank, Container #8. Use 150 ml of hexane from the blank container for this analysis. Transfer 150 ml of the hexane to a clean 250-ml beaker. Evaporate the hexane at room temperature (not to exceed 30 °C (85 °F)) and pressure in a laboratory hood to approximately 10 ml. Quantitatively transfer the beaker contents to a clean 50-ml pre-tared weighing tin and evaporate to dryness at room temperature (not to exceed 30 °C (85 °F)) and pressure in a laboratory hood. Following evaporation, desiccate the residue for 24 hours in a desiccator containing anhydrous calcium sulfate. Weigh at intervals of at least six hours to a constant weight (*i.e.*, less than or equal to 0.5 mg change from previous weighing), and report results to the nearest 0.1 mg on Figure 4 of Section 18.

12.0 Calculations and Data Analysis

12.1 Nomenclature. Report results in International System of Units (SI units) unless the regulatory authority for testing specifies English units. The following nomenclature is used.

$\Delta H_@$ = Pressure drop across orifice at flow rate of 0.75 SCFM at standard conditions, inches of water column (NOTE: Specific to each orifice and meter box).

17.03 = mg/milliequivalents for ammonium ion.
ACFM = Actual cubic feet per minute.
C_{cpm} = Concentration of the condensable PM in the stack gas, dry basis, corrected to standard conditions, milligrams/dry standard cubic foot.
m_c = Mass of the NH_4^+ added to sample to form ammonium sulfate, mg.
m_{cpm} = Mass of the total condensable PM, mg.
m_{fb} = Mass of total CPM in field train recovery blank, mg.
mg = Milligrams.
mg/L = Milligrams per liter.
m_i = Mass of inorganic CPM, mg.
m_{ib} = Mass of inorganic CPM in field train recovery blank, mg.
m_o = Mass of organic CPM, mg.
m_{ob} = Mass of organic CPM in field train blank, mg.
m_r = Mass of dried sample from inorganic fraction, mg.
N = Normality of ammonium hydroxide titrant.
ppmv = Parts per million by volume.
ppmw = Parts per million by weight.
$V_{m(std)}$ = Volume of gas sample measured by the dry gas meter, corrected to standard conditions, dry standard cubic meter (dscm) or dry standard cubic foot (dscf) as defined in Equation 5–1 of Method 5.
V_t = Volume of NH_4OH titrant, ml.
V_p = Volume of water added during train purge.

12.2 Calculations. Use the following equations to complete the calculations required in this test method. Enter the appropriate results from these calculations on the CPM Work Table (*see* Figure 6 of Section 18).

12.2.1 Mass of ammonia correction. Correction for ammonia added during titration of 100 ml aqueous CPM sample. This calculation assumes no waters of hydration.

$$m_c = 17.03 \times V_t \times N \qquad \text{(Eq. 1)}$$

12.2.2 Mass of the Field Train Recovery Blank (mg). Per Section 9.10, the mass of the field train recovery blank, m_{fb}, shall not exceed 2.0 mg.

$$m_{fb} = m_{ib} + m_{ob} \qquad \text{(Eq. 2)}$$

12.2.3 Mass of Inorganic CPM (mg).

$$m_i = m_r - m_c \qquad \text{(Eq. 3)}$$

12.2.4 Total Mass of CPM (mg).

$$m_{cpm} = m_i + m_o - m_{fb} \qquad \text{(Eq. 4)}$$

12.2.5 Concentration of CPM (mg/dscf).

$$C_{cpm} = \frac{m_{cpm}}{V_{m(std)}} \qquad \text{(Eq. 5)}$$

12.3 Emissions Test Report. You must prepare a test report following the guidance in EPA Guidance Document 043 (Preparation and Review of Test Reports. December 1998).

13.0 Method Performance

An EPA field evaluation of the revised Method 202 showed the following precision in the results: approximately 4 mg for total CPM, approximately 0.5 mg for organic CPM, and approximately 3.5 mg for inorganic CPM.

14.0 Pollution Prevention

[Reserved]

15.0 Waste Management

Solvent and water are evaporated in a laboratory hood during analysis. No liquid waste is generated in the performance of this method. Organic solvents used to clean sampling equipment should be managed as RCRA organic waste.

16.0 Alternative Procedures

Alternative Method 2, Thermocouple Calibration (ALT–011) for the thermocouple calibration can be found at *http://www.epa.gov/ttn/emc/approalt.html*.

17.0 References

(1) Commonwealth of Pennsylvania, Department of Environmental Resources. 1960. Chapter 139, Sampling and Testing (Title 25, Rules and Regulations, part I, Department of Environmental Resources, Subpart C, Protection of Natural Resources, Article III, Air Resources). January 8, 1960.

(2) DeWees, W.D. and K.C. Steinsberger. 1989. ''Method Development and Evaluation of Draft Protocol for Measurement of Condensable Particulate Emissions.'' Draft Report. November 17, 1989.

(3) DeWees, W.D., K.C. Steinsberger, G.M. Plummer, L.T. Lay, G.D. McAlister, and R.T. Shigehara. 1989. ''Laboratory and Field Evaluation of EPA Method 5 Impinger Catch for Measuring Condensable Matter from Stationary Sources.'' Paper presented at the 1989 EPA/AWMA International Symposium on Measurement of Toxic and Related Air Pollutants. Raleigh, North Carolina. May 1–5, 1989.

(4) Electric Power Research Institute (EPRI). 2008. ''Laboratory Comparison of Methods to Sample and Analyze Condensable PM.'' EPRI Agreement EP–P24373/C11811 Condensable Particulate Methods: EPRI Collaboration with EPA, October 2008.

(5) Nothstein, Greg. Masters Thesis. University of Washington. Department of Environmental Health. Seattle, Washington.

(6) Richards, J., T. Holder, and D. Goshaw. 2005. ''Optimized Method 202 Sampling Train to Minimize the Biases Associated with Method 202 Measurement of Condensable PM Emissions.'' Paper presented at Air & Waste Management Association Hazardous Waste Combustion Specialty Conference. St. Louis, Missouri. November 2–3, 2005.

(7) Texas Air Control Board, Laboratory Division. 1976. ''Determination of Particulate in Stack Gases Containing Sulfuric Acid and/or Sulfur Dioxide.'' Laboratory Methods for Determination of Air Pollutants. Modified December 3, 1976.

(8) Puget Sound Air Pollution Control Agency, Engineering Division. 1983. ''Particulate Source Test Procedures Adopted by Puget Sound Air Pollution Control Agency Board of Directors.'' Seattle, Washington. August 11, 1983.

(9) U.S. Environmental Protection Agency, Federal Reference Methods 1 through 5 and Method 17, 40 CFR 60, appendix A–1 through A–3 and A–6.

(10) U.S. Environmental Protection Agency. 2008. ''Evaluation and Improvement of Condensable PM Measurement,'' EPA Contract No. EP–D–07–097, Work Assignment 2–03, October 2008.

(11) U.S. Environmental Protection Agency. 2005. ''Laboratory Evaluation of Method 202 to Determine Fate of SO_2 in Impinger Water,'' EPA Contract No. 68–D–02–061, Work Assignment 3–14, September 30, 2005.

(12) U.S. Environmental Protection Agency. 2010. Field valuation of an Improved Method for Sampling and Analysis of Filterable and Condensable Particulate Matter. Office of Air Quality Planning and Standards, Sector Policy and Program Division Monitoring Policy Group. Research Triangle Park, NC 27711.

(13) Wisconsin Department of Natural Resources. 1988. Air Management Operations Handbook, Revision 3. January 11, 1988.

18.0 Tables, Diagrams, Flowcharts, and Validation Data

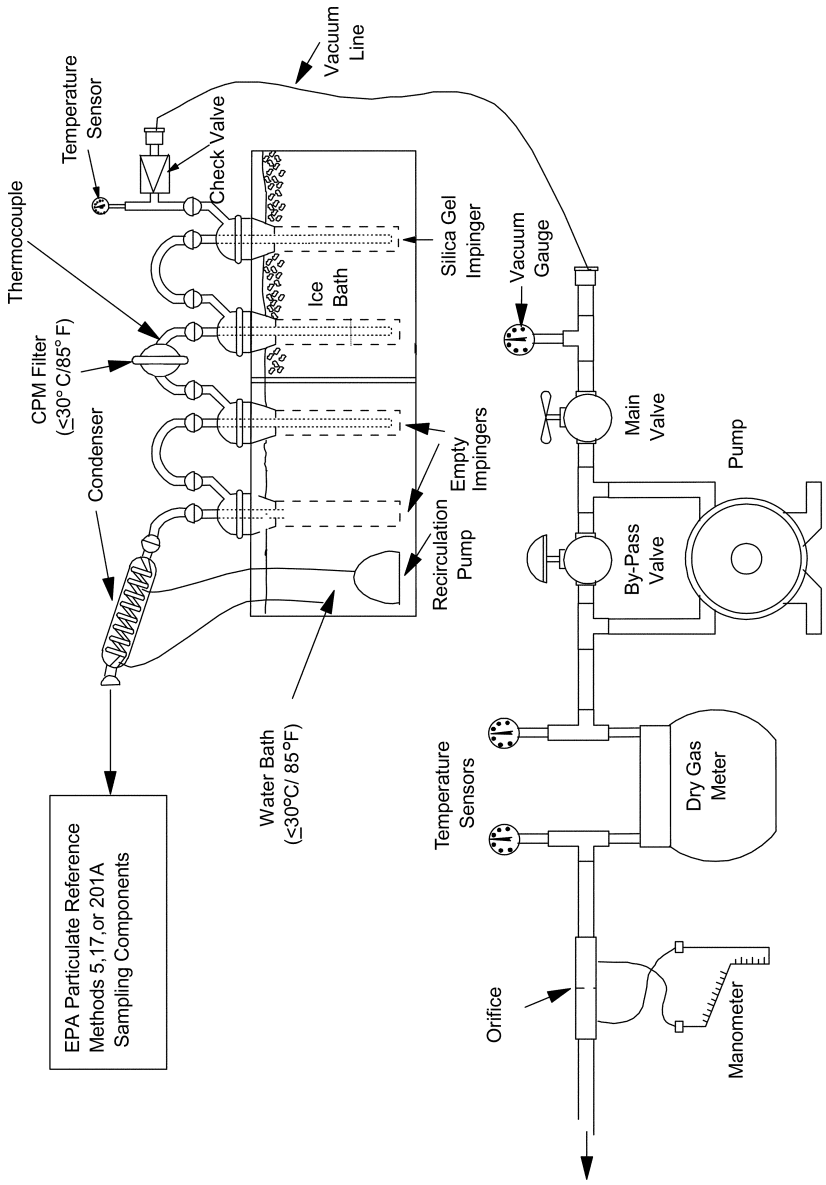

Figure 1. Schematic of Condensable Particulate Sampling Train

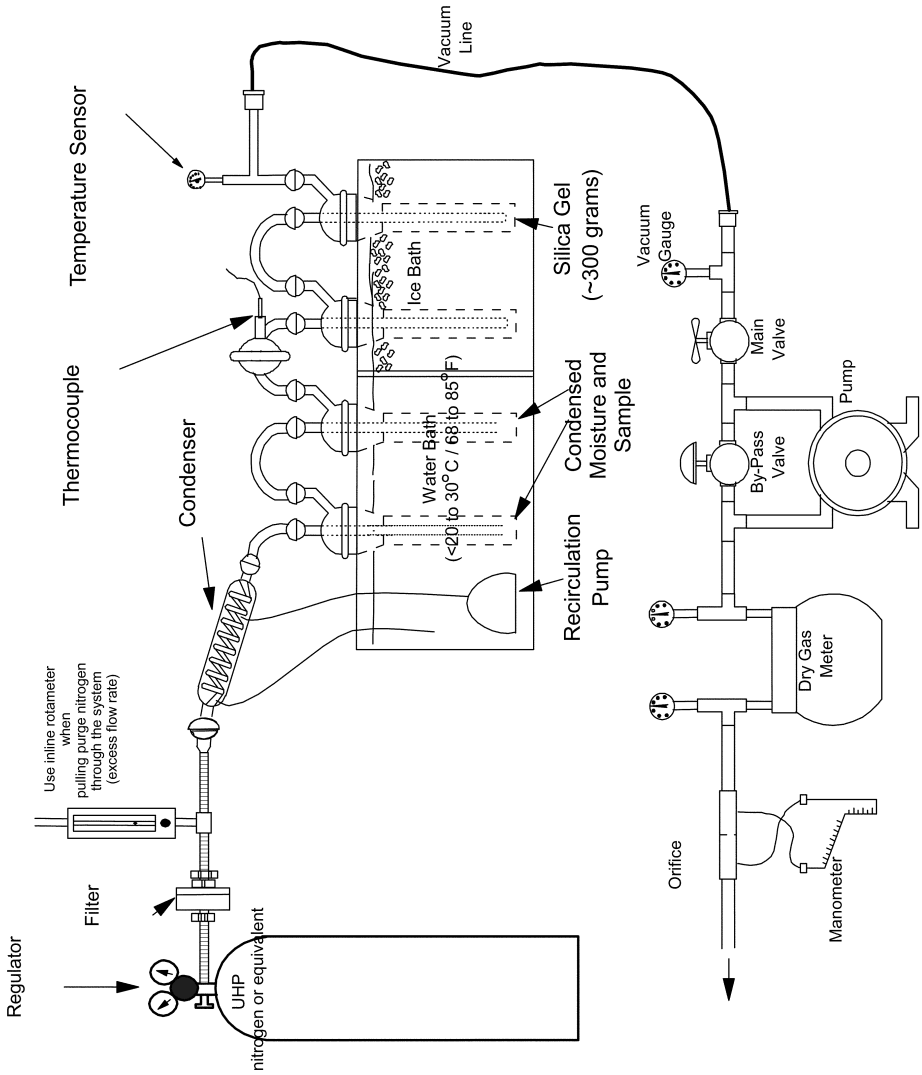

Figure 2. Nitrogen Purge Train Configuration (Vacuum Purge)

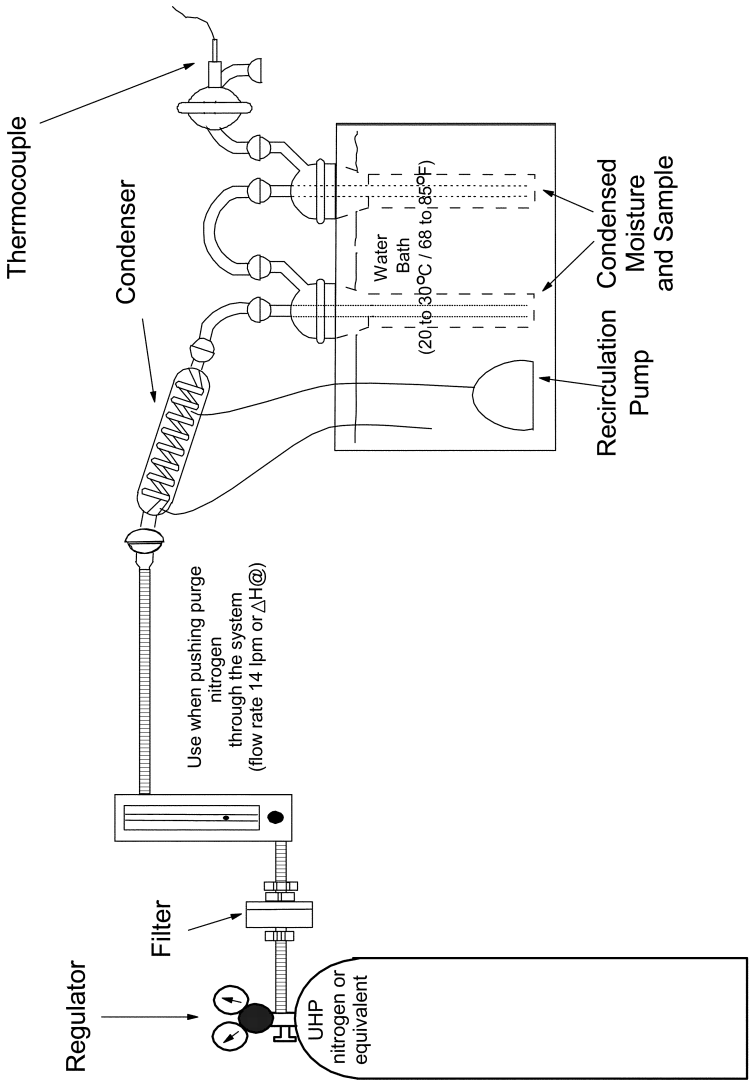

Figure 3. Nitrogen Purge Train Configuration (Pressure Purge)

Field Train Recovery Blank Condensable Particulate Calculations	
Plant	
Date	
Blank No.	
CPM Filter No.	
Water volume added to purge train (V_p)	ml
Field Reagent Blank Mass[a]	
Water (Section 11.2.7)	mg
Acetone (Section 11.2.6)	mg
Hexane (Section 11.2.8)	mg
Field Train Recovery Blank Mass	
Mass of Organic CPM (m_{ob}) (Section 11.2.3)	mg
Mass of Inorganic CPM (m_{ib}) (Equation 3)	mg
Mass of the Field Train Recovery Blank (not to exceed 2.0 mg) (Equation 2)	mg

[a]Field reagent blanks are optional and intended to provide the testing contractor with information they can use to implement corrective actions, if necessary, to reduce the residual mass contribution from reagents used in the field. Field reagent blanks are not used to correct the CPM measurement results.

Figure 4. Field Train Recovery Blank Condensable Particulate Calculations

Other Field Train Sample Condensable Particulate Data	
Plant	
Date	
Run No.	
CPM Filter No.	
Water volume added to purge train (max 50 ml) (V_p)	ml
Date	
Run No.	
CPM Filter No.	
Water volume added to purge train (max 50 ml) (V_p)	ml
Date	
Run No.	
CPM Filter No.	
Water volume added to purge train (max 50 ml) (V_p)	ml

Figure 5. Other Field Train Sample Condensable Particulate Data

Calculations for Recovery of Condensable PM (CPM)		
Plant		
Date		
Run No.		
Sample Preparation - CPM Containers No. 1 and 2 (Section 11.1)		
Was significant volume of water lost during transport? Yes or No		
If Yes, measure the volume received.		
Estimate the volume lost during transport.		ml
Was significant volume of organic rinse lost during transport? Yes or No		
If Yes, measure the volume received.		
Estimate the volume lost during transport.		ml
For Titration		
Normality of NH_4OH (N) (Section 10.2)		N
Volume of titrant (V_t) (Section 11.2.2.2)		ml
Mass of NH_4 added (m_c) (Equation 1)		mg
For CPM Blank Weights		
Inorganic Field Train Recovery Blank Mass(m_{ib}) (Section 9.9)		mg
Organic Field Train Recovery Blank Mass (m_{ob}) (Section 9.9)		mg
Mass of Field Train Recovery Blank (M_{fb}) (max. 2 mg) (Equation 2)		mg
For CPM Train Weights		
Mass of Organic CPM (m_o) (Section 11.2.3)		mg
Mass of Inorganic CPM (m_i) (Equation 3)		mg
Total CPM Mass (m_{cpm}) (Equation 4)		mg

Figure 6. CPM Work Table

METHOD 203A—VISUAL DETERMINATION OF OPACITY OF EMISSIONS FROM STATIONARY SOURCES FOR TIME-AVERAGED REGULATIONS

1.0 Scope and Application

What is Method 203A?

Method 203A is an example test method suitable for State Implementation Plans (SIP) and is applicable to the determination of the opacity of emissions from sources of visible emissions for time-averaged regulations. A time-averaged regulation is any regulation that requires averaging visible emission data to determine the opacity of visible emissions over a specific time period.

Method 203A is virtually identical to EPA's Method 9 of 40 CFR Part 60, Appendix A, except for the data-reduction procedures, which provide for averaging times other than 6 minutes. Therefore, using Method 203A with a 6-minute averaging time would be the same as following EPA Method 9. The certification procedures for this method are identical to those provided in Method 9 and are provided here, in full, for clarity and convenience. An example visible emission observation form and instructions for its use can be found in reference 7 of Section 17 of Method 9.

2.0 Summary of Method

The opacity of emissions from sources of visible emissions is determined visually by an observer certified according to the procedures in Section 10 of this method. Readings taken every 15 seconds are averaged over a time period specified in the applicable regulation ranging from 2 minutes to 6 minutes.

3.0 Definitions [Reserved]

4.0 Interferences [Reserved]

5.0 Safety [Reserved]

6.0 Equipment and Supplies

What equipment and supplies are needed?

6.1 Stop Watch. Two watches are required that provide a continuous display of time to the nearest second.

6.2 Compass (optional). A compass is useful for determining the direction of the emission point from the spot where the visible emissions (VE) observer stands and for determining the wind direction at the source. For accurate readings, the compass should be magnetic with resolution better than 10 degrees. It is suggested that the compass be jewel-mounted and liquid-filled to dampen the needle swing; map reading compasses are excellent.

6.3 Range Finder (optional). Range finders determine distances from the observer to the emission point. The instrument should measure a distance of 1000 meters with a minimum accuracy of ±10 percent.

6.4 Abney Level (optional). This device for determining the vertical viewing angle should measure within 5 degrees.

6.5 Sling Psychrometer (optional). In case of the formation of a steam plume, a wet- and dry-bulb thermometer, accurate to 0.5 °C, are mounted on a sturdy assembly and swung rapidly in the air in order to determine the relative humidity.

6.6 Binoculars (optional). Binoculars are recommended to help identify stacks and to characterize the plume. An 8 × 50 or 10 × 50 magnification, color-corrected coated lenses and rectilinear field of view is recommended.

6.7 Camera (optional). A camera is often used to document the emissions before and after the actual opacity determination.

6.8 Safety Equipment. The following safety equipment, which should be approved by the Occupational Safety and Health Association (OSHA), is recommended: orange or yellow hard hat, eye and ear protection, and steel-toed safety boots.

6.9 Clipboard and Accessories (optional). A clipboard, several ball-point pens (black ink recommended), a rubber band, and several visible emission observation forms facilitate documentation.

7.0 Reagents and Standards (Reserved]

8.0 Sample Collection, Preservation, Storage, and Transport

What is the Test Procedure?

An observer qualified in accordance with Section 10 of this method must use the following procedures to visually determine the opacity of emissions from stationary sources.

8.1 Procedure for Emissions from Stacks. These procedures are applicable for visually determining the opacity of stack emissions by a qualified observer.

8.1.1 Position. You must stand at a distance sufficient to provide a clear view of the emissions with the sun oriented in the 140-degree sector to your back. Consistent with maintaining the above requirement as much as possible, you must make opacity observations from a position such that the line of vision is approximately perpendicular to the plume direction, and when observing opacity of emissions from rectangular outlets (e.g., roof monitors, open baghouses, non-circular stacks), approximately perpendicular to the longer axis of the outlet. You should not include more than one plume in the line of sight at a time when multiple plumes are involved and, in any case, make opacity observations with the line of sight perpendicular to the longer axis of such a set of multiple stacks (e.g., stub stacks on baghouses).

8.1.2 Field Records. You must record the name of the plant, emission location, type of

facility, observer's name and affiliation, a sketch of the observer's position relative to the source, and the date on a field data sheet. An example visible emission observation form can be found in reference 7 of Section 17 of this method. You must record the time, estimated distance to the emission location, approximate wind direction, estimated wind speed, description of the sky condition (presence and color of clouds), and plume background on the field data sheet at the time opacity readings are initiated and completed.

8.1.3 Observations. You must make opacity observations at the point of greatest opacity in that portion of the plume where condensed water vapor is not present. Do not look continuously at the plume but, instead, observe the plume momentarily at 15-second intervals.

8.1.3.1 Attached Steam Plumes. When condensed water vapor is present within the plume as it emerges from the emission outlet, you must make opacity observations beyond the point in the plume at which condensed water vapor is no longer visible. You must record the approximate distance from the emission outlet to the point in the plume at which the observations are made.

8.1.3.2 Detached Steam Plumes. When water vapor in the plume condenses and becomes visible at a distinct distance from the emission outlet, you must make the opacity observation at the emission outlet prior to the condensation of water vapor and the formation of the steam plume.

8.2 Recording Observations. You must record the opacity observations to the nearest 5 percent every 15 seconds on an observational record sheet such as the example visible emission observation form in reference 7 of Section 17 of this method. Each observation recorded represents the average opacity of emissions for a 15-second period. The overall length of time for which observations are recorded must be appropriate to the averaging time specified in the applicable regulation.

9.0 Quality Control [Reserved]

10.0 Calibration and Standardization

10.1 What are the Certification Requirements? To receive certification as a qualified observer, you must be trained and knowledgeable on the procedures in Section 8.0 of this method, be tested and demonstrate the ability to assign opacity readings in 5 percent increments to 25 different black plumes and 25 different white plumes, with an error not to exceed 15 percent opacity on any one reading and an average error not to exceed 7.5 percent opacity in each category. You must be tested according to the procedures described in Section 10.2 of this method. Any smoke generator used pursuant to Section 10.2 of this method must be equipped with a smoke meter which meets the requirements of Section 10.3 of this method. Certification tests that do not meet the requirements of Sections 10.2 and 10.3 of this method are not valid.

The certification must be valid for a period of 6 months, and after each 6-month period, the qualification procedures must be repeated by an observer in order to retain certification.

10.2 What is the Certification Procedure? The certification test consists of showing the candidate a complete run of 50 plumes, 25 black plumes and 25 white plumes, generated by a smoke generator. Plumes must be presented in random order within each set of 25 black and 25 white plumes. The candidate assigns an opacity value to each plume and records the observation on a suitable form. At the completion of each run of 50 readings, the score of the candidate is determined. If a candidate fails to qualify, the complete run of 50 readings must be repeated in any retest. The smoke test may be administered as part of a smoke school or training program, and may be preceded by training or familiarization runs of the smoke generator during which candidates are shown black and white plumes of known opacity.

10.3 Smoke Generator.

10.3.1 What are the Smoke Generator Specifications? Any smoke generator used for the purpose of Section 10.2 of this method must be equipped with a smoke meter installed to measure opacity across the diameter of the smoke generator stack. The smoke meter output must display in-stack opacity, based upon a path length equal to the stack exit diameter on a full 0 to 100 percent chart recorder scale. The smoke meter optical design and performance must meet the specifications shown in Table 203A–1 of this method. The smoke meter must be calibrated as prescribed in Section 10.3.2 of this method prior to conducting each smoke reading test. At the completion of each test, the zero and span drift must be checked and, if the drift exceeds ±1 percent opacity, the condition must be corrected prior to conducting any subsequent test runs. The smoke meter must be demonstrated at the time of installation to meet the specifications listed in Table 203A–1 of this method. This demonstration must be repeated following any subsequent repair or replacement of the photocell or associated electronic circuitry including the chart recorder or output meter, or every 6 months, whichever occurs first.

10.3.2 How is the Smoke Meter Calibrated? The smoke meter is calibrated after allowing a minimum of 30 minutes warm-up by alternately producing simulated opacity of 0 percent and 100 percent. When a stable response at 0 percent or 100 percent is noted, the smoke meter is adjusted to produce an output of 0 percent or 100 percent, as appropriate. This calibration must be repeated

until stable 0 percent and 100 percent readings are produced without adjustment. Simulated 0 percent and 100 percent opacity values may be produced by alternately switching the power to the light source on and off while the smoke generator is not producing smoke.

10.3.3 How is the Smoke Meter Evaluated? The smoke meter design and performance are to be evaluated as follows:

10.3.3.1 Light Source. You must verify from manufacturer's data and from voltage measurements made at the lamp, as installed, that the lamp is operated within 5 percent of the nominal rated voltage.

10.3.3.2 Spectral Response of the Photocell. You must verify from manufacturer's data that the photocell has a photopic response; *i.e.*, the spectral sensitivity of the cell must closely approximate the standard spectral-luminosity curve for photopic vision which is referenced in (b) of Table 203A–1 of this method.

10.3.3.3 Angle of View. You must check construction geometry to ensure that the total angle of view of the smoke plume, as seen by the photocell, does not exceed 15 degrees. Calculate the total angle of view as follows:

$$\varphi_v = 2 \tan^{-1} (d/2L)$$

Where:

φ_v = Total angle of view
d = The photocell diameter + the diameter of the limiting aperture
L = Distance from the photocell to the limiting aperture.

The limiting aperture is the point in the path between the photocell and the smoke plume where the angle of view is most restricted. In smoke generator smoke meters, this is normally an orifice plate.

10.3.3.4 Angle of Projection. You must check construction geometry to ensure that the total angle of projection of the lamp on the smoke plume does not exceed 15 degrees. Calculate the total angle of projection as follows:

$$\varphi_p = 2 \tan^{-1} (d/2L)$$

Where:

φ_p = Total angle of projection
d = The sum of the length of the lamp filament + the diameter of the limiting aperture
L = The distance from the lamp to the limiting aperture.

10.3.3.5 Calibration Error. Using neutral-density filters of known opacity, you must check the error between the actual response and the theoretical linear response of the smoke meter. This check is accomplished by first calibrating the smoke meter according to Section 10.3.2 of this method and then inserting a series of three neutral-density filters of nominal opacity of 20, 50, and 75 percent in the smoke meter path length. Use filters calibrated within 2 percent. Care should be taken when inserting the filters to prevent stray light from affecting the meter. Make a total of five non-consecutive readings for each filter. The maximum opacity error on any one reading shall be ±3 percent.

10.3.3.6 Zero and Span Drift. Determine the zero and span drift by calibrating and operating the smoke generator in a normal manner over a 1-hour period. The drift is measured by checking the zero and span at the end of this period.

10.3.3.7 Response Time. Determine the response time by producing the series of five simulated 0 percent and 100 percent opacity values and observing the time required to reach stable response. Opacity values of 0 percent and 100 percent may be simulated by alternately switching the power to the light source off and on while the smoke generator is not operating.

11.0 Analytical Procedures [Reserved]

12.0 Data Analysis and Calculations

12.1 Time-Averaged Regulations. A set of observations is composed of an appropriate number of consecutive observations determined by the averaging time specified (*i.e.*, 8 observations for a two minute average). Divide the recorded observations into sets of appropriate time lengths for the specified averaging time. Sets must consist of consecutive observations; however, observations immediately preceding and following interrupted observations shall be deemed consecutive. Sets need not be consecutive in time and in no case shall two sets overlap. For each set of observations, calculate the average opacity by summing the opacity readings taken over the appropriate time period and dividing by the number of readings. For example, for a 2-minute average, eight consecutive readings would be averaged by adding the eight readings and dividing by eight.

13.0 Method Performance

13.1 Time-averaging Performances. The accuracy of test procedures for time-averaged regulations was evaluated through field studies that compare the opacity readings to a transmissometer. Analysis of these data shows that, as the time interval for averaging increases, the positive error decreases. For example, over a 2-minute time period, 90 percent of the results underestimated opacity or overestimated opacity by less than 9.5 percent opacity, while over a 6-minute time period, 90 percent of the data have less than a 7.5 percent positive error. Overall, the field studies demonstrated a negative bias. Over a 2-minute time period, 57 percent of the data have zero or negative error, and over a 6-minute time period, 58 percent of the data have zero or negative error. This means that observers are more likely to assign opacity

values that are below, rather than above, the actual opacity value. Consequently, a larger percentage of noncompliance periods will be reported as compliant periods rather than compliant periods reported as violations. Table 203A–2 highlights the precision data results from the June 1985 report: ''Opacity Errors for Averaging and Non Averaging Data Reduction and Reporting Techniques.''

14.0 Pollution Prevention [Reserved]

15.0 Waste Management [Reserved]

16.0 Alternative Procedures [Reserved]

17.0 References

1. U.S. Environmental Protection Agency. Standards of Performance for New Stationary Sources; Appendix A; Method 9 for Visual Determination of the Opacity of Emissions from Stationary Sources. Final Rule. 39 FR 219. Washington, DC. U.S. Government Printing Office. November 12, 1974.

2. Office of Air and Radiation. ''Quality Assurance Guideline for Visible Emission Training Programs.'' EPA–600/S4–83–011. Quality Assurance Division. Research Triangle Park, NC. May 1982.

3. Office of Research and Development. ''Method 9—Visible Determination of the Opacity of Emissions from Stationary Sources.'' February 1984. Quality Assurance Handbook for Air Pollution Measurement Systems. Volume III, Section 3.1.2. Stationary Source Specific Methods. EPA–600–4–77–027b. August 1977. Office of Research and Development Publications, 26 West Clair Street, Cincinnati, OH.

4. Office of Air Quality Planning and Standards. ''Opacity Error for Averaging and Non-averaging Data Reduction and Reporting Techniques.'' Final Report–SR–1–6–85. Emission Measurement Branch, Research Triangle Park, NC. June 1985.

5. U.S. Environmental Protection Agency. Preparation, Adoption, and Submittal of State Implementation Plans. Methods for Measurement of PM_{10} Emissions from Stationary Sources. Final Rule. FEDERAL REGISTER. Washington, DC. U.S. Government Printing Office. Volume 55, No. 74. Pages 14246–14279. April 17, 1990.

6. Office of Air Quality Planning and Standards. ''Collaborative Study of Opacity Observations of Fugitive Emissions from Unpaved Roads by Certified Observers.'' Emission Measurement Branch, Research Triangle Park, NC. October 1986.

7. Office of Air Quality Planning and Standards. ''Field Data Forms and Instructions for EPA Methods 203A, 203B, and 203C.'' EPA 455/R–93–005. Stationary Source Compliance Division, Washington, DC, June 1993.

18.0 Tables, Diagrams, Flowcharts, and Validation Data

TABLE 203A–1—SMOKE METER DESIGN AND PERFORMANCE SPECIFICATIONS

Parameter	Specification
a. Light Source	Incandescent lamp operated at nominal rated voltage.
b. Spectral response of photocell	Photopic (daylight spectral response of the human eye—Citation 3).
c. Angle of view	15° maximum total angle.
d. Angle of projection	15° maximum total angle.
e. Calibration error	±3% opacity, maximum.
f. Zero and span drift	±1% opacity, 30 minutes
g. Response time	5 seconds.

TABLE 203A–2—PRECISION BETWEEN OBSERVERS: OPACITY AVERAGING

Averaging period	Number of observations	Standard deviation (% opacity)	Amount with <7.5% opacity difference
15-second	140,250	3.4	87
2 minutes	17,694	2.6	92
3 minutes	11,836	2.4	92
6 minutes	5,954	2.1	93

METHOD 203B—VISUAL DETERMINATION OF OPACITY OF EMISSIONS FROM STATIONARY SOURCES FOR TIME-EXCEPTION REGULATIONS

1.0 Scope and Application

What is Method 203B?

Method 203B is an example test method suitable for State Implementation Plans (SIPs) and is applicable to the determination of the opacity of emissions from sources of visible emissions for time-exception regulations. A time-exception regulation means any regulation that allows predefined periods of opacity above the otherwise applicable opacity limit (e.g., allowing exceedances of 20 percent opacity for 3 minutes in 1 hour.)

Method 203B is virtually identical to EPA's Method 9 of 40 CFR part 60, Appendix A, except for the data-reduction procedures, which have been modified to apply to time-exception regulations. The certification procedures for this method are identical to those provided in Method 9. An example of a visible emission observation form and instructions for its use can be found in reference 7 of Section 17 of Method 203A.

2.0 Summary of Method

The opacity of emissions from sources of visible emissions is determined visually by a qualified observer.

3.0 Definitions [Reserved]

4.0 Interferences [Reserved]

5.0 Safety [Reserved]

6.0 Equipment and Supplies

What equipment and supplies are needed?

The same as specified in Section 6.0 of Method 203A.

7.0 Reagents and Standards [Reserved]

8.0 Sample Collection, Preservation, Storage, and Transport

What is the Test Procedure?

The observer qualified in accordance with Section 10 of Method 203A must use the following procedures for visually determining the opacity of emissions.

8.1 Procedures for Emissions From Stationary Sources. The procedures for emissions from stationary sources are the same as specified in 8.1 of Method 203A.

8.2 Recording Observations. You must record opacity observations to the nearest 5 percent at 15-second intervals on an observational record sheet. Each observation recorded represents the average opacity of emissions for a 15-second period. The overall length of time for which observations are recorded must be appropriate to the applicable regulation.

9.0 Quality Control [Reserved]

10.0 Calibration and Standardization

The Calibration and Standardization requirements are the same as specified in Section 10 of Method 203A.

11.0 Analytical Procedures [Reserved]

12.0 Data Analysis and Calculations

Data Reduction for Time-Exception Regulations. For a time-exception regulation, reduce opacity observations as follows: Count the number of observations above the applicable standard and multiply that number by 0.25 to determine the minutes of emissions above the target opacity.

13.0 Method Performance

13.1 Time-Exception Regulations. ''Opacity Errors for Averaging and Non-Averaging Data Reduction and Reporting Techniques'' analyzed the time errors associated with false compliance or false non-compliance determinations resulting from a sample of 1110 opacity readings with 6-minute observation periods. The study applied a 20 percent opacity standard. Fifty-one percent of the data showed zero error in time determinations. The standard deviation was 97.5 seconds for the 6-minute time period.

13.1.1 Overall, the study showed a negative bias. Each reading is associated with a 15-second block of time. The readings were multiplied by 15 seconds and the resulting time spent above the standard was compared to the transmissometer results. The average amount of time that observations deviated from the transmissometer's determinations was –8.3 seconds. Seventy percent of the time determinations were either correct or underestimated the time of excess emissions. Consequently, a larger percentage of noncompliance periods would be reported as compliant periods rather than compliant periods reported as violations.

13.1.2 Some time-exception regulations reduce the data by averaging over 1-minute periods and then counting those minutes above the standard. This data reduction procedure results in a less stringent standard than determinations resulting from data reduction procedures of Method 203B.

14.0 Pollution Prevention [Reserved]

15.0 Waste Management [Reserved]

16.0 Alternative Procedures [Reserved]

17.0 References

The references are the same as specified in Section 17 of Method 203A.

18.0 Tables, Diagrams, Flowcharts, and Validation Data [Reserved]

METHOD 203C—VISUAL DETERMINATION OF OPACITY OF EMISSIONS FROM STATIONARY SOURCES FOR INSTANTANEOUS LIMITATION REGULATIONS

1.0 Scope and Application

What is Method 203C?

Method 203C is an example test method suitable for State Implementation Plans (SIPs) and is applicable to the determination of the opacity of emissions from sources of visible emissions for regulations with an instantaneous opacity limitation. An instantaneous opacity limitation is an opacity limit which is never to be exceeded.

Method 203C is virtually identical to EPA's Method 9 of 40 CFR Part 60, Appendix A, except for 5-second reading intervals and the data-reduction procedures, which have been modified for instantaneous limitation regulations. The certification procedures for this method are virtually identical to Method 9. An example visible emission observation form and instructions for its use can be found in reference 7 of Section 17 of Method 203A.

2.0 Summary of Method

The opacity of emissions from sources of visible emissions is determined visually by an observer certified according to the procedures in Section 10 of Method 203A.

3.0 Definitions [Reserved]

4.0 Interferences [Reserved]

5.0 Safety [Reserved]

6.0 Equipment and Supplies

The equipment and supplies used are the same as Section 6.0 of Method 203A.

7.0 Reagents and Standards [Reserved]

8.0 Sample Collection, Preservation, Storage, and Transport

What is the Test Procedure?

The qualified observer must use the following procedures for visually determining the opacity of emissions.

8.1 Procedures for Emissions From Stationary Sources. These are the same as Section 8.1 of Method 203A.

8.1.1 Position. Same as Section 8.1.1 of Method 203A.

8.1.2 Field Records. Same as Section 8.1.2 of Method 203A.

8.1.3 Observations. Make opacity observations at the point of greatest opacity in that portion of the plume where condensed water vapor is not present. Do not look continuously at the plume, instead, observe the plume momentarily at *5-second* intervals.

8.1.3.1 Attached Steam Plumes. Same as Section 8.1.3.1 of Method 203A.

8.1.3.2 Detached Steam Plumes. Same as Section 8.1.3.2 of Method 203A.

8.2 Recording Observations. You must record opacity observations to the nearest 5 percent at 5-second intervals on an observational record sheet. Each observation recorded represents the average of emissions for the 5-second period. The overall time for which recordings are made must be of a length appropriate to the applicable regulation for which opacity is being measured.

9.0 Quality Control [Reserved]

10.0 Calibration and Standardization

The calibration and standardization procedures are the same as Section 10 of Method 203A.

11.0 Analytical Procedures [Reserved]

12.0 Data Analysis and Calculations

12.1 Data Reduction for Instantaneous Limitation Regulations. For an instantaneous limitation regulation, a 1-minute averaging time will be used. You must divide the observations recorded on the record sheet into sets of consecutive observations. A set is composed of the consecutive observations made in 1 minute. Sets need not be consecutive in time, and in no case must two sets overlap. You must reduce opacity observations by dividing the sum of all observations recorded in a set by the number of observations recorded in each set.

12.2 Reduce opacity observations by averaging 12 consecutive observations recorded at 5-second intervals. Divide the observations recorded on the record sheet into sets of 12 consecutive observations. For each set of 12 observations, calculate the average by summing the opacity of the 12 observations and dividing this sum by 12.

13.0 Method Performance

The results of the ''Collaborative Study of Opacity Observations at Five-second Intervals by Certified Observers'' are almost identical to those of previous studies of Method 9 observations taken at 15-second intervals and indicate that observers can make valid observations at 5-second intervals. The average difference of all observations from the transmissometer values was 8.8 percent opacity, which shows a fairly high negative bias. Underestimating the opacity of the visible emissions is more likely than overestimating the opacity of the emissions.

14.0 Pollution Prevention [Reserved]

15.0 Waste Management [Reserved]

16.0 Alternative Procedures [Reserved]

17.0 References

The references are the same as references 1–7 in Method 203A in addition to the following:

1. Office of Air Quality Planning and Standards. ''Collaborative Study of Opacity Observations at Five-second Intervals by Certified Observers.'' Docket A–84–22, IV–A–2. Emission Measurement Branch, Research Triangle Park, N.C. September 1990.

18.0 Tables, Diagrams, Flowcharts, and Validation Data

METHOD 204—CRITERIA FOR AND VERIFICATION OF A PERMANENT OR TEMPORARY TOTAL ENCLOSURE

1. Scope and Application

This procedure is used to determine whether a permanent or temporary enclosure meets the criteria for a total enclosure. An existing building may be used as a temporary or permanent enclosure as long as it meets the appropriate criteria described in this method.

2. Summary of Method

An enclosure is evaluated against a set of criteria. If the criteria are met and if all the exhaust gases from the enclosure are ducted to a control device, then the volatile organic compounds (VOC) capture efficiency (CE) is assumed to be 100 percent, and CE need not be measured. However, if part of the exhaust gas stream is not ducted to a control device, CE must be determined.

3. Definitions

3.1 Natural Draft Opening (NDO). Any permanent opening in the enclosure that remains open during operation of the facility and is not connected to a duct in which a fan is installed.

3.2 Permanent Total Enclosure (PE). A permanently installed enclosure that completely surrounds a source of emissions such that all VOC emissions are captured and contained for discharge to a control device.

3.3 Temporary Total Enclosure (TTE). A temporarily installed enclosure that completely surrounds a source of emissions such that all VOC emissions that are not directed through the control device (*i.e.*, uncaptured) are captured by the enclosure and contained for discharge through ducts that allow for the accurate measurement of the uncaptured VOC emissions.

3.4 Building Enclosure (BE). An existing building that is used as a TTE.

4. Safety

An evaluation of the proposed building materials and the design for the enclosure is recommended to minimize any potential hazards.

5. Criteria for Temporary Total Enclosure

5.1 Any NDO shall be at least four equivalent opening diameters from each VOC emitting point unless otherwise specified by the Administrator.

5.2 Any exhaust point from the enclosure shall be at least four equivalent duct or hood diameters from each NDO.

5.3 The total area of all NDO's shall not exceed 5 percent of the surface area of the enclosure's four walls, floor, and ceiling.

5.4 The average facial velocity (FV) of air through all NDO's shall be at least 3,600 m/hr (200 fpm). The direction of air flow through all NDO's shall be into the enclosure.

5.5 All access doors and windows whose areas are not included in section 5.3 and are not included in the calculation in section 5.4 shall be closed during routine operation of the process.

6. Criteria for a Permanent Total Enclosure

6.1 Same as sections 5.1 and 5.3 through 5.5.

6.2 All VOC emissions must be captured and contained for discharge through a control device.

7. Quality Control

7.1 The success of this method lies in designing the TTE to simulate the conditions that exist without the TTE (*i.e.*, the effect of the TTE on the normal flow patterns around the affected facility or the amount of uncaptured VOC emissions should be minimal). The TTE must enclose the application stations, coating reservoirs, and all areas from the application station to the oven. The oven does not have to be enclosed if it is under negative pressure. The NDO's of the temporary enclosure and an exhaust fan must be properly sized and placed.

7.2 Estimate the ventilation rate of the TTE that best simulates the conditions that exist without the TTE (*i.e.*, the effect of the TTE on the normal flow patterns around the affected facility or the amount of uncaptured VOC emissions should be minimal). Figure 204–1 or the following equation may be used as an aid.

$$CE = \frac{Q_G C_G}{Q_G C_G + Q_F C_F} \qquad \text{Eq. 204-1}$$

Measure the concentration (C_G) and flow rate (Q_G) of the captured gas stream, specify a safe concentration (C_F) for the uncaptured gas stream, estimate the CE, and then use the plot in Figure 204–1 or Equation 204–1 to

determine the volumetric flow rate of the uncaptured gas stream (QF). An exhaust fan that has a variable flow control is desirable.

7.3 Monitor the VOC concentration of the captured gas steam in the duct before the capture device without the TTE. To minimize the effect of temporal variation on the captured emissions, the baseline measurement should be made over as long a time period as practical. However, the process conditions must be the same for the measurement in section 7.5 as they are for this baseline measurement. This may require short measuring times for this quality control check before and after the construction of the TTE.

7.4 After the TTE is constructed, monitor the VOC concentration inside the TTE. This concentration should not continue to increase, and must not exceed the safe level according to Occupational Safety and Health Administration requirements for permissible exposure limits. An increase in VOC concentration indicates poor TTE design.

7.5 Monitor the VOC concentration of the captured gas stream in the duct before the capture device with the TTE. To limit the effect of the TTE on the process, the VOC concentration with and without the TTE must be within 10 percent. If the measurements do not agree, adjust the ventilation rate from the TTE until they agree within 10 percent.

8. Procedure

8.1 Determine the equivalent diameters of the NDO's and determine the distances from each VOC emitting point to all NDO's. Determine the equivalent diameter of each exhaust duct or hood and its distance to all NDO's. Calculate the distances in terms of equivalent diameters. The number of equivalent diameters shall be at least four.

8.2 Measure the total surface area (A_T) of the enclosure and the total area (A_N) of all NDO's in the enclosure. Calculate the NDO to enclosure area ratio (NEAR) as follows:

$$NEAR = \frac{A_N}{A_T} \qquad \text{Eq. 204-2}$$

The NEAR must be ≤10.05.

8.3 Measure the volumetric flow rate, corrected to standard conditions, of each gas stream exiting the enclosure through an exhaust duct or hood using EPA Method 2. In some cases (e.g., when the building is the enclosure), it may be necessary to measure the volumetric flow rate, corrected to standard conditions, of each gas stream entering the enclosure through a forced makeup air duct using Method 2. Calculate FV using the following equation:

$$FV = \frac{Q_O - Q_I}{A_N} \qquad \text{Eq. 204-3}$$

where:

Q_O = the sum of the volumetric flow from all gas streams exiting the enclosure through an exhaust duct or hood.

Q_I = the sum of the volumetric flow from all gas streams into the enclosure through a forced makeup air duct; zero, if there is no forced makeup air into the enclosure.

A_N = total area of all NDO's in enclosure.

The FV shall be at least 3,600 m/hr (200 fpm). Alternatively, measure the pressure differential across the enclosure. A pressure drop of 0.013 mm Hg (0.007 in. H_2O) corresponds to an FV of 3,600 m/hr (200 fpm).

8.4 Verify that the direction of air flow through all NDO's is inward. If FV is less than 9,000 m/hr (500 fpm), the continuous inward flow of air shall be verified using streamers, smoke tubes, or tracer gases. Monitor the direction of air flow for at least 1 hour, with checks made no more than 10 minutes apart. If FV is greater than 9,000 m/hr (500 fpm), the direction of air flow through the NDOs shall be presumed to be inward at all times without verification.

9. Diagrams

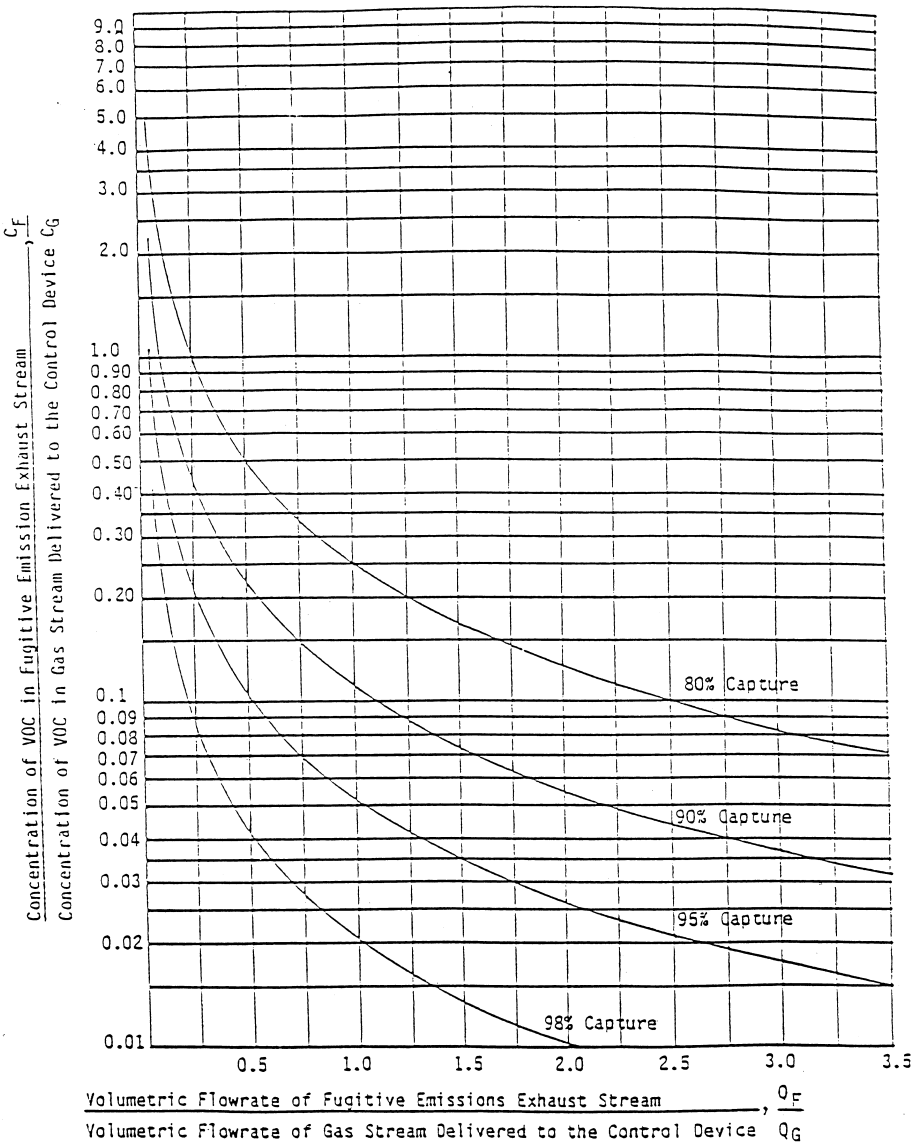

Figure 204-1. The crumpler chart.

METHOD 204A—VOLATILE ORGANIC COMPOUNDS CONTENT IN LIQUID INPUT STREAM

1. Scope and Application

1.1 Applicability. This procedure is applicable for determining the input of volatile organic compounds (VOC). It is intended to be used in the development of liquid/gas protocols for determining VOC capture efficiency (CE) for surface coating and printing operations.

1.2 Principle. The amount of VOC introduced to the process (L) is the sum of the products of the weight (W) of each VOC containing liquid (ink, paint, solvent, etc.) used and its VOC content (V).

1.3 Sampling Requirements. A CE test shall consist of at least three sampling runs. Each run shall cover at least one complete production cycle, but shall be at least 3 hours long. The sampling time for each run need not exceed 8 hours, even if the production cycle has not been completed. Alternative sampling times may be used with the approval of the Administrator.

2. Summary of Method

The amount of VOC containing liquid introduced to the process is determined as the weight difference of the feed material before and after each sampling run. The VOC content of the liquid input material is determined by volatilizing a small aliquot of the material and analyzing the volatile material using a flame ionization analyzer (FIA). A sample of each VOC containing liquid is analyzed with an FIA to determine V.

3. Safety

Because this procedure is often applied in highly explosive areas, caution and care should be exercised in choosing, installing, and using the appropriate equipment.

4. Equipment and Supplies

Mention of trade names or company products does not constitute endorsement. All gas concentrations (percent, ppm) are by volume, unless otherwise noted.

4.1 Liquid Weight.

4.1.1 Balances/Digital Scales. To weigh drums of VOC containing liquids to within 0.2 lb or 1.0 percent of the total weight of VOC liquid used.

4.1.2 Volume Measurement Apparatus (Alternative). Volume meters, flow meters, density measurement equipment, etc., as needed to achieve the same accuracy as direct weight measurements.

4.2 VOC Content (FIA Technique). The liquid sample analysis system is shown in Figures 204A–1 and 204A–2. The following equipment is required:

4.2.1 Sample Collection Can. An appropriately-sized metal can to be used to collect VOC containing materials. The can must be constructed in such a way that it can be grounded to the coating container.

4.2.2 Needle Valves. To control gas flow.

4.2.3 Regulators. For carrier gas and calibration gas cylinders.

4.2.4 Tubing. Teflon or stainless steel tubing with diameters and lengths determined by connection requirements of equipment. The tubing between the sample oven outlet and the FIA shall be heated to maintain a temperature of 120 ±5 °C.

4.2.5 Atmospheric Vent. A tee and 0- to 0.5-liter/min rotameter placed in the sampling line between the carrier gas cylinder and the VOC sample vessel to release the excess carrier gas. A toggle valve placed between the tee and the rotameter facilitates leak tests of the analysis system.

4.2.6 Thermometer. Capable of measuring the temperature of the hot water bath to within 1 °C.

4.2.7 Sample Oven. Heated enclosure, containing calibration gas coil heaters, critical orifice, aspirator, and other liquid sample analysis components, capable of maintaining a temperature of 120 ±5 °C.

4.2.8 Gas Coil Heaters. Sufficient lengths of stainless steel or Teflon tubing to allow zero and calibration gases to be heated to the sample oven temperature before entering the critical orifice or aspirator.

4.2.9 Water Bath. Capable of heating and maintaining a sample vessel temperature of 100 ±5 °C.

4.2.10 Analytical Balance. To measure ±0.001 g.

4.2.11 Disposable Syringes. 2-cc or 5-cc.

4.2.12 Sample Vessel. Glass, 40-ml septum vial. A separate vessel is needed for each sample.

4.2.13 Rubber Stopper. Two-hole stopper to accommodate 3.2-mm (⅛-in.) Teflon tubing, appropriately sized to fit the opening of the sample vessel. The rubber stopper should be wrapped in Teflon tape to provide a tighter seal and to prevent any reaction of the sample with the rubber stopper. Alternatively, any leak-free closure fabricated of nonreactive materials and accommodating the necessary tubing fittings may be used.

4.2.14 Critical Orifices. Calibrated critical orifices capable of providing constant flow rates from 50 to 250 ml/min at known pressure drops. Sapphire orifice assemblies (available from O'Keefe Controls Company) and glass capillary tubing have been found to be adequate for this application.

4.2.15 Vacuum Gauge. Zero to 760-mm (0- to 30-in.) Hg U-Tube manometer or vacuum gauge.

4.2.16 Pressure Gauge. Bourdon gauge capable of measuring the maximum air pressure at the aspirator inlet (e.g., 100 psig).

4.2.17 Aspirator. A device capable of generating sufficient vacuum at the sample vessel to create critical flow through the calibrated orifice when sufficient air pressure is present at the aspirator inlet. The aspirator must also provide sufficient sample pressure to operate the FIA. The sample is also mixed with the dilution gas within the aspirator.

4.2.18 Soap Bubble Meter. Of an appropriate size to calibrate the critical orifices in the system.

4.2.19 Organic Concentration Analyzer. An FIA with a span value of 1.5 times the expected concentration as propane; however, other span values may be used if it can be demonstrated that they would provide more accurate measurements. The FIA instrument should be the same instrument used in the gaseous analyses adjusted with the same

fuel, combustion air, and sample back-pressure (flow rate) settings. The system shall be capable of meeting or exceeding the following specifications:

4.2.19.1 Zero Drift. Less than ±3.0 percent of the span value.

4.2.19.2 Calibration Drift. Less than ±3.0 percent of the span value.

4.2.19.3 Calibration Error. Less than ±5.0 percent of the calibration gas value.

4.2.20 Integrator/Data Acquisition System. An analog or digital device or computerized data acquisition system used to integrate the FIA response or compute the average response and record measurement data. The minimum data sampling frequency for computing average or integrated values is one measurement value every 5 seconds. The device shall be capable of recording average values at least once per minute.

4.2.21 Chart Recorder (Optional). A chart recorder or similar device is recommended to provide a continuous analog display of the measurement results during the liquid sample analysis.

5. Reagents and Standards

5.1 Calibration and Other Gases. Gases used for calibration, fuel, and combustion air (if required) are contained in compressed gas cylinders. All calibration gases shall be traceable to National Institute of Standards and Technology standards and shall be certified by the manufacturer to ±1 percent of the tag value. Additionally, the manufacturer of the cylinder should provide a recommended shelf life for each calibration gas cylinder over which the concentration does not change more than ±2 percent from the certified value. For calibration gas values not generally available, dilution systems calibrated using Method 205 may be used. Alternative methods for preparing calibration gas mixtures may be used with the approval of the Administrator.

5.1.1 Fuel. The FIA manufacturer's recommended fuel should be used. A 40 percent H2/60 percent He or 40 percent H_2/60 percent N_2 gas mixture is recommended to avoid an oxygen synergism effect that reportedly occurs when oxygen concentration varies significantly from a mean value. Other mixtures may be used provided the tester can demonstrate to the Administrator that there is no oxygen synergism effect.

5.1.2 Carrier Gas. High purity air with less than 1 ppm of organic material (as propane) or less than 0.1 percent of the span value, whichever is greater.

5.1.3 FIA Linearity Calibration Gases. Low-, mid-, and high-range gas mixture standards with nominal propane concentrations of 20–30, 45–55, and 70–80 percent of the span value in air, respectively. Other calibration values and other span values may be used if it can be shown to the Administrator's satisfaction that equally accurate measurements would be achieved.

5.1.4 System Calibration Gas. Gas mixture standard containing propane in air, approximating the undiluted VOC concentration expected for the liquid samples.

6. Sample Collection, Preservation and Storage

6.1 Samples must be collected in a manner that prevents or minimizes loss of volatile components and that does not contaminate the coating reservoir.

6.2 Collect a 100-ml or larger sample of the VOC containing liquid mixture at each application location at the beginning and end of each test run. A separate sample should be taken of each VOC containing liquid added to the application mixture during the test run. If a fresh drum is needed during the sampling run, then obtain a sample from the fresh drum.

6.3 When collecting the sample, ground the sample container to the coating drum. Fill the sample container as close to the rim as possible to minimize the amount of headspace.

6.4 After the sample is collected, seal the container so the sample cannot leak out or evaporate.

6.5 Label the container to clearly identify the contents.

7. Quality Control

7.1 Required instrument quality control parameters are found in the following sections:

7.1.1 The FIA system must be calibrated as specified in section 8.1.

7.1.2 The system drift check must be performed as specified in section 8.2.

8. Calibration and Standardization

8.1 FIA Calibration and Linearity Check. Make necessary adjustments to the air and fuel supplies for the FIA and ignite the burner. Allow the FIA to warm up for the period recommended by the manufacturer. Inject a calibration gas into the measurement system and adjust the back-pressure regulator to the value required to achieve the flow rates specified by the manufacturer. Inject the zero- and the high-range calibration gases and adjust the analyzer calibration to provide the proper responses. Inject the low- and mid-range gases and record the responses of the measurement system. The calibration and linearity of the system are acceptable if the responses for all four gases are within 5 percent of the respective gas values. If the performance of the system is not acceptable, repair or adjust the system and repeat the linearity check. Conduct a calibration and linearity check after assembling the analysis system and after a major change is made to the system.

8.2 Systems Drift Checks. After each sample, repeat the system calibration checks in section 9.2.7 before any adjustments to the FIA or measurement system are made. If the zero or calibration drift exceeds ±3 percent of the span value, discard the result and repeat the analysis.

Alternatively, recalibrate the FIA as in section 8.1 and report the results using both sets of calibration data (*i.e.*, data determined prior to the test period and data determined following the test period). The data that results in the lowest CE value shall be reported as the results for the test run.

8.3 Critical Orifice Calibration.

8.3.1 Each critical orifice must be calibrated at the specific operating conditions under which it will be used. Therefore, assemble all components of the liquid sample analysis system as shown in Figure 204A–3. A stopwatch is also required.

8.3.2 Turn on the sample oven, sample line, and water bath heaters, and allow the system to reach the proper operating temperature. Adjust the aspirator to a vacuum of 380 mm (15 in.) Hg vacuum. Measure the time required for one soap bubble to move a known distance and record barometric pressure.

8.3.3 Repeat the calibration procedure at a vacuum of 406 mm (16 in.) Hg and at 25-mm (1-in.) Hg intervals until three consecutive determinations provide the same flow rate. Calculate the critical flow rate for the orifice in ml/min at standard conditions. Record the vacuum necessary to achieve critical flow.

9. Procedure

9.1 Determination of Liquid Input Weight.

9.1.1 Weight Difference. Determine the amount of material introduced to the process as the weight difference of the feed material before and after each sampling run. In determining the total VOC containing liquid usage, account for:

(a) The initial (beginning) VOC containing liquid mixture.

(b) Any solvent added during the test run.

(c) Any coating added during the test run.

(d) Any residual VOC containing liquid mixture remaining at the end of the sample run.

9.1.1.1 Identify all points where VOC containing liquids are introduced to the process. To obtain an accurate measurement of VOC containing liquids, start with an empty fountain (if applicable). After completing the run, drain the liquid in the fountain back into the liquid drum (if possible) and weigh the drum again. Weigh the VOC containing liquids to ±0.5 percent of the total weight (full) or ±1.0 percent of the total weight of VOC containing liquid used during the sample run, whichever is less. If the residual liquid cannot be returned to the drum, drain the fountain into a preweighed empty drum to determine the final weight of the liquid.

9.1.1.2 If it is not possible to measure a single representative mixture, then weigh the various components separately (e.g., if solvent is added during the sampling run, weigh the solvent before it is added to the mixture). If a fresh drum of VOC containing liquid is needed during the run, then weigh both the empty drum and fresh drum.

9.1.2 Volume Measurement (Alternative). If direct weight measurements are not feasible, the tester may use volume meters or flow rate meters and density measurements to determine the weight of liquids used if it can be demonstrated that the technique produces results equivalent to the direct weight measurements. If a single representative mixture cannot be measured, measure the components separately.

9.2 Determination of VOC Content in Input Liquids

9.2.1 Assemble the liquid VOC content analysis system as shown in Figure 204A–1.

9.2.2 Permanently identify all of the critical orifices that may be used. Calibrate each critical orifice under the expected operating conditions (*i.e.*, sample vacuum and temperature) against a volume meter as described in section 8.3.

9.2.3 Label and tare the sample vessels (including the stoppers and caps) and the syringes.

9.2.4 Install an empty sample vessel and perform a leak test of the system. Close the carrier gas valve and atmospheric vent and evacuate the sample vessel to 250 mm (10 in.) Hg absolute or less using the aspirator. Close the toggle valve at the inlet to the aspirator and observe the vacuum for at least 1 minute. If there is any change in the sample pressure, release the vacuum, adjust or repair the apparatus as necessary, and repeat the leak test.

9.2.5 Perform the analyzer calibration and linearity checks according to the procedure in section 5.1. Record the responses to each of the calibration gases and the back-pressure setting of the FIA.

9.2.6 Establish the appropriate dilution ratio by adjusting the aspirator air supply or substituting critical orifices. Operate the aspirator at a vacuum of at least 25 mm (1 in.) Hg greater than the vacuum necessary to achieve critical flow. Select the dilution ratio so that the maximum response of the FIA to the sample does not exceed the high-range calibration gas.

9.2.7 Perform system calibration checks at two levels by introducing compressed gases at the inlet to the sample vessel while the aspirator and dilution devices are operating. Perform these checks using the carrier gas (zero concentration) and the system calibration gas. If the response to the carrier

gas exceeds ±0.5 percent of span, clean or repair the apparatus and repeat the check. Adjust the dilution ratio as necessary to achieve the correct response to the upscale check, but do not adjust the analyzer calibration. Record the identification of the orifice, aspirator air supply pressure, FIA back-pressure, and the responses of the FIA to the carrier and system calibration gases.

9.2.8 After completing the above checks, inject the system calibration gas for approximately 10 minutes. Time the exact duration of the gas injection using a stopwatch. Determine the area under the FIA response curve and calculate the system response factor based on the sample gas flow rate, gas concentration, and the duration of the injection as compared to the integrated response using Equations 204A–2 and 204A–3.

9.2.9 Verify that the sample oven and sample line temperatures are 120 ±5 °C and that the water bath temperature is 100 ±5 °C.

9.2.10 Fill a tared syringe with approximately 1 g of the VOC containing liquid and weigh it. Transfer the liquid to a tared sample vessel. Plug the sample vessel to minimize sample loss. Weigh the sample vessel containing the liquid to determine the amount of sample actually received. Also, as a quality control check, weigh the empty syringe to determine the amount of material delivered. The two coating sample weights should agree within 0.02 g. If not, repeat the procedure until an acceptable sample is obtained.

9.2.11 Connect the vessel to the analysis system. Adjust the aspirator supply pressure to the correct value. Open the valve on the carrier gas supply to the sample vessel and adjust it to provide a slight excess flow to the atmospheric vent. As soon as the initial response of the FIA begins to decrease, immerse the sample vessel in the water bath. (Applying heat to the sample vessel too soon may cause the FIA response to exceed the calibrated range of the instrument and, thus, invalidate the analysis.)

9.2.12 Continuously measure and record the response of the FIA until all of the volatile material has been evaporated from the sample and the instrument response has returned to the baseline (*i.e.*, response less than 0.5 percent of the span value). Observe the aspirator supply pressure, FIA back-pressure, atmospheric vent, and other system operating parameters during the run; repeat the analysis procedure if any of these parameters deviate from the values established during the system calibration checks in section 9.2.7. After each sample, perform the drift check described in section 8.2. If the drift check results are acceptable, calculate the VOC content of the sample using the equations in section 11.2. Alternatively, recalibrate the FIA as in section 8.1 and report the results using both sets of calibration data (*i.e.*, data determined prior to the test period and data determined following the test period). The data that results in the lowest CE value shall be reported as the results for the test run. Integrate the area under the FIA response curve, or determine the average concentration response and the duration of sample analysis.

10. Data Analysis and Calculations

10.1 Nomenclature.

A_L=area under the response curve of the liquid sample, area count.

A_S=area under the response curve of the calibration gas, area count.

C_S=actual concentration of system calibration gas, ppm propane.

$K=1.830 \times 10^{-9}$ g/(ml-ppm).

L=total VOC content of liquid input, kg.

M_L=mass of liquid sample delivered to the sample vessel, g.

q=flow rate through critical orifice, ml/min.

RF=liquid analysis system response factor, g/area count.

θ_S=total gas injection time for system calibration gas during integrator calibration, min.

V_{Fj}=final VOC fraction of VOC containing liquid j.

V_{Ij}=initial VOC fraction of VOC containing liquid j.

V_{Aj}=VOC fraction of VOC containing liquid j added during the run.

V=VOC fraction of liquid sample.

W_{Fj}=weight of VOC containing liquid j remaining at end of the run, kg.

W_{Ij}=weight of VOC containing liquid j at beginning of the run, kg.

W_{Aj}=weight of VOC containing liquid j added during the run, kg.

10.2 Calculations

10.2.1 Total VOC Content of the Input VOC Containing Liquid.

$$L = \sum_{j=1}^{n} V_{rj} W_{rj} - \sum_{j=1}^{n} V_{Fj} W_{Fj} + \sum_{j=1}^{n} V_{Aj} W_{Aj} \qquad \text{Eq. 204A-1}$$

10.2.2 Liquid Sample Analysis System Response Factor for Systems Using Integrators, Grams/Area Count.

$$RF = \frac{C_S q \theta_S K}{A_S} \qquad \text{Eq. 204A-2}$$

10.2.3 VOC Content of the Liquid Sample.

$$V = \frac{A_L RF}{M_L} \qquad \text{Eq. 204A-3}$$

11. Method Performance

The measurement uncertainties are estimated for each VOC containing liquid as follows: W = ±2.0 percent and V = ±4.0 percent. Based on these numbers, the probable uncertainty for L is estimated at about ±4.5 percent for each VOC containing liquid.

12. Diagrams

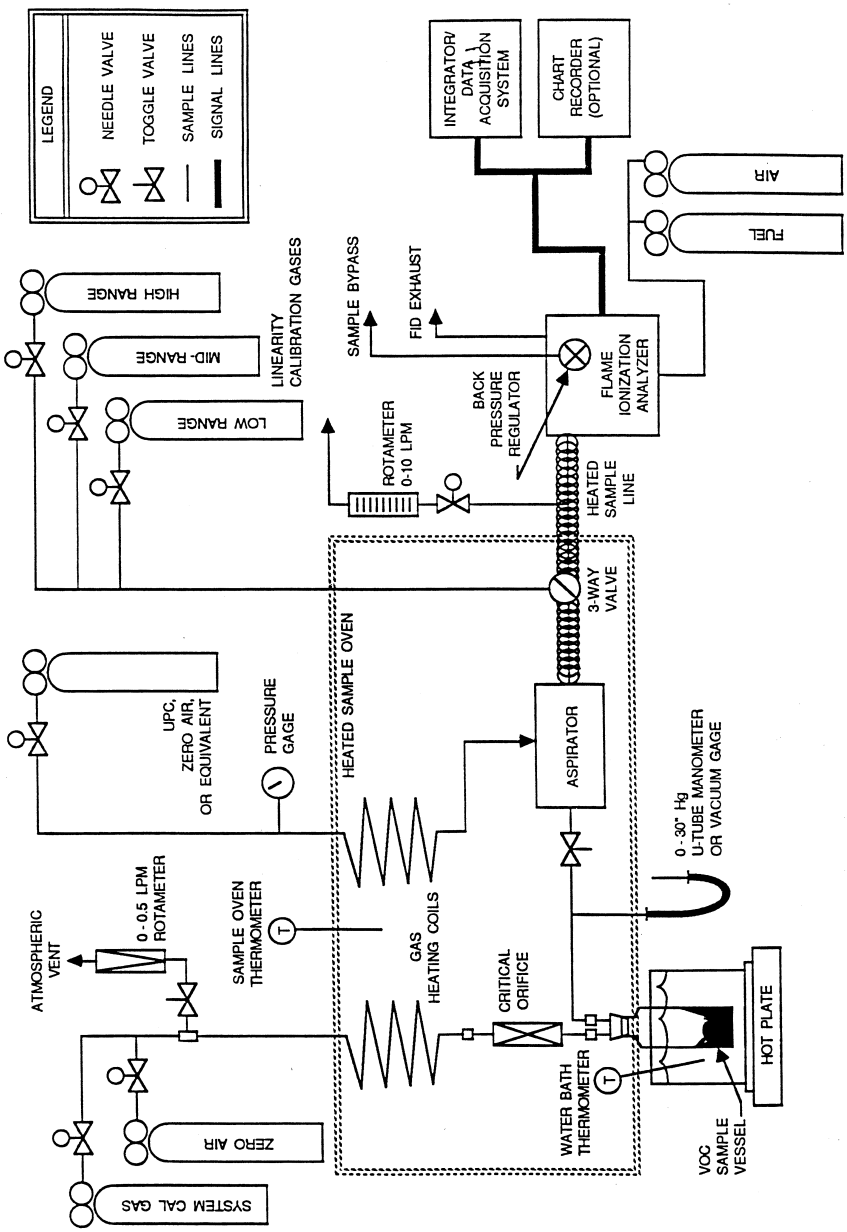

Figure 204A-1. Liquid analysis sample system.

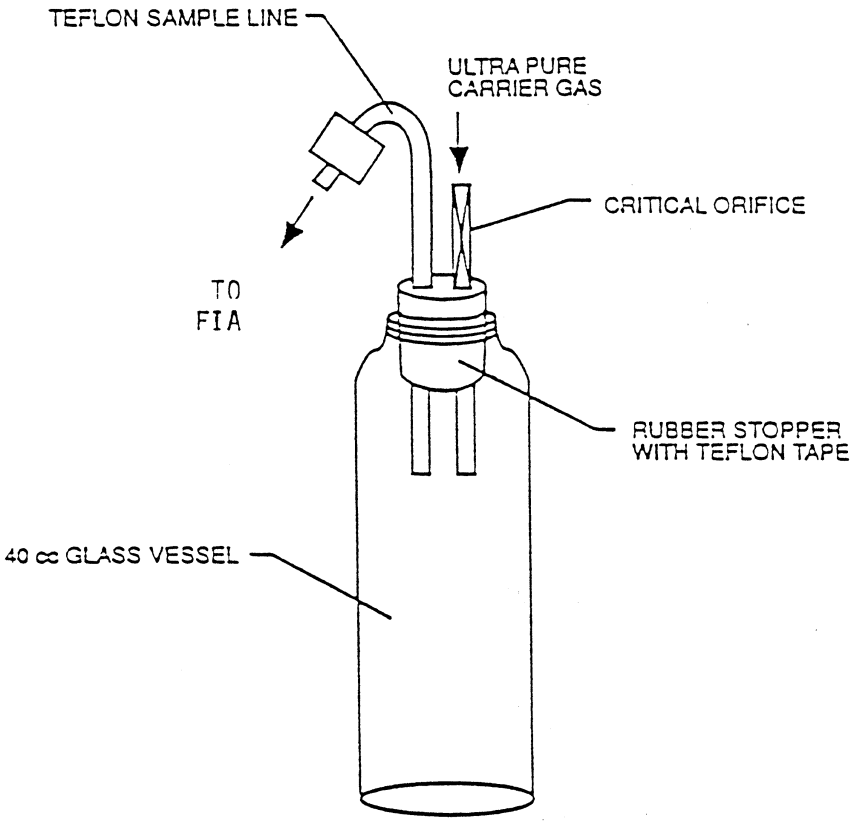

Figure 204A-2. VOC sampling vessel.

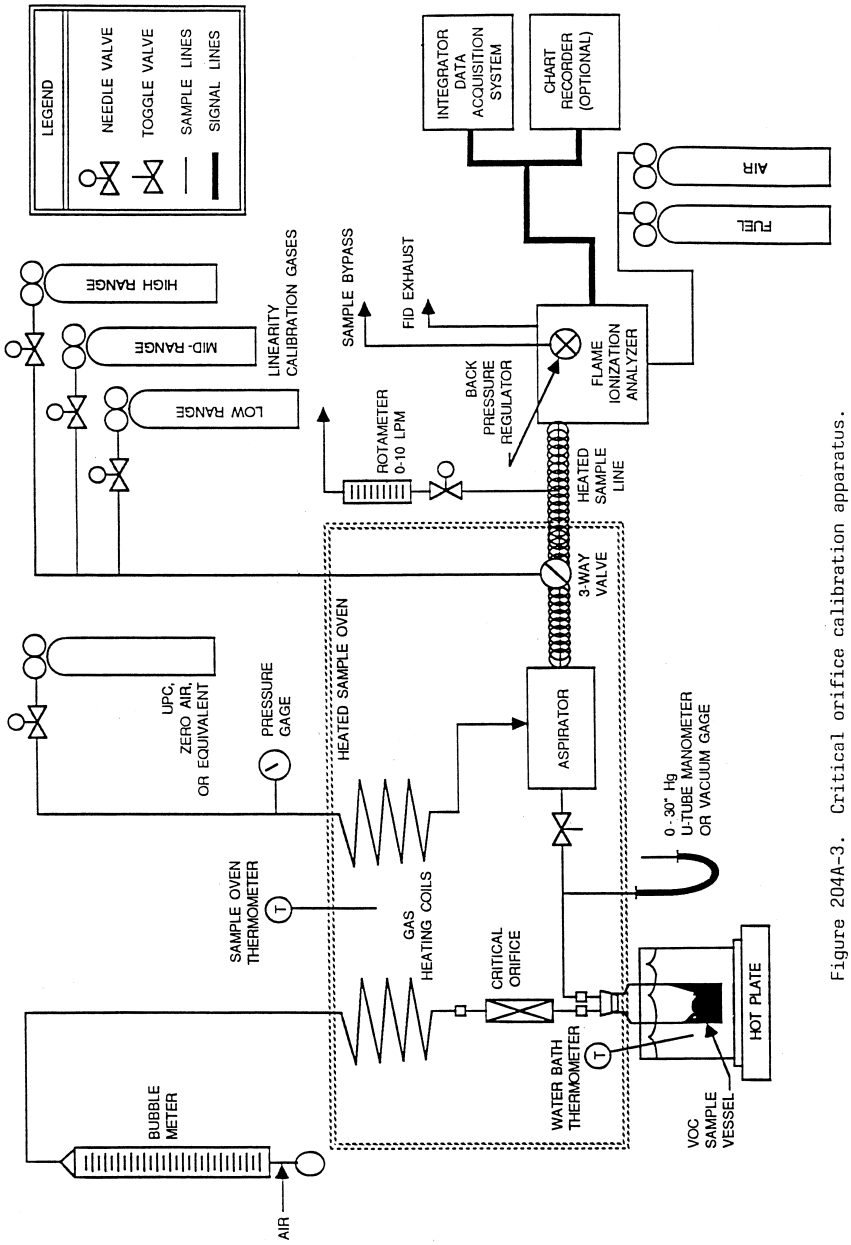

Figure 204A-3. Critical orifice calibration apparatus.

METHOD 204B—VOLATILE ORGANIC COMPOUNDS EMISSIONS IN CAPTURED STREAM

1. Scope and Application

1.1 Applicability. This procedure is applicable for determining the volatile organic compounds (VOC) content of captured gas streams. It is intended to be used in the development of a gas/gas protocol for determining VOC capture efficiency (CE) for surface coating and printing operations. The procedure may not be acceptable in certain site-specific situations [e.g., when: (1) direct-fired heaters or other circumstances affect the quantity of VOC at the control device inlet; and (2) particulate organic aerosols are formed in the process and are present in the captured emissions].

1.2 Principle. The amount of VOC captured (G) is calculated as the sum of the products of the VOC content (C_{Gj}), the flow rate (Q_{Gj}), and the sample time (Θ_C) from each captured emissions point.

1.3 Sampling Requirements. A CE test shall consist of at least three sampling runs. Each run shall cover at least one complete production cycle, but shall be at least 3 hours long. The sampling time for each run need not exceed 8 hours, even if the production cycle has not been completed. Alternative sampling times may be used with the approval of the Administrator.

2. Summary of Method

A gas sample is extracted from the source though a heated sample line and, if necessary, a glass fiber filter to a flame ionization analyzer (FIA).

3. Safety

Because this procedure is often applied in highly explosive areas, caution and care should be exercised in choosing, installing, and using the appropriate equipment.

4. Equipment and Supplies

Mention of trade names or company products does not constitute endorsement. All gas concentrations (percent, ppm) are by volume, unless otherwise noted.

4.1 Gas VOC Concentration. A schematic of the measurement system is shown in Figure 204B–1. The main components are as follows:

4.1.1 Sample Probe. Stainless steel or equivalent. The probe shall be heated to prevent VOC condensation.

4.1.2 Calibration Valve Assembly. Three-way valve assembly at the outlet of the sample probe to direct the zero and calibration gases to the analyzer. Other methods, such as quick-connect lines, to route calibration gases to the outlet of the sample probe are acceptable.

4.1.3 Sample Line. Stainless steel or Teflon tubing to transport the sample gas to the analyzer. The sample line must be heated to prevent condensation.

4.1.4 Sample Pump. A leak-free pump, to pull the sample gas through the system at a flow rate sufficient to minimize the response time of the measurement system. The components of the pump that contact the gas stream shall be constructed of stainless steel or Teflon. The sample pump must be heated to prevent condensation.

4.1.5 Sample Flow Rate Control. A sample flow rate control valve and rotameter, or equivalent, to maintain a constant sampling rate within 10 percent. The flow rate control valve and rotameter must be heated to prevent condensation. A control valve may also be located on the sample pump bypass loop to assist in controlling the sample pressure and flow rate.

4.1.6 Organic Concentration Analyzer. An FIA with a span value of 1.5 times the expected concentration as propane; however, other span values may be used if it can be demonstrated to the Administrator's satisfaction that they would provide equally accurate measurements. The system shall be capable of meeting or exceeding the following specifications:

4.1.6.1 Zero Drift. Less than ±3.0 percent of the span value.

4.1.6.2 Calibration Drift. Less than ±3.0 percent of the span value.

4.1.6.3 Calibration Error. Less than ±5.0 percent of the calibration gas value.

4.1.6.4 Response Time. Less than 30 seconds.

4.1.7 Integrator/Data Acquisition System. An analog or digital device, or computerized data acquisition system used to integrate the FIA response or compute the average response and record measurement data. The minimum data sampling frequency for computing average or integrated values is one measurement value every 5 seconds. The device shall be capable of recording average values at least once per minute.

4.2 Captured Emissions Volumetric Flow Rate.

4.2.1 Method 2 or 2A Apparatus. For determining volumetric flow rate.

4.2.2 Method 3 Apparatus and Reagents. For determining molecular weight of the gas stream. An estimate of the molecular weight of the gas stream may be used if approved by the Administrator.

4.2.3 Method 4 Apparatus and Reagents. For determining moisture content, if necessary.

5. Reagents and Standards

5.1 Calibration and Other Gases. Gases used for calibration, fuel, and combustion air (if required) are contained in compressed gas cylinders. All calibration gases shall be traceable to National Institute of Standards and Technology standards and shall be certified by the manufacturer to ±1 percent of

the tag value. Additionally, the manufacturer of the cylinder should provide a recommended shelf life for each calibration gas cylinder over which the concentration does not change more than ±2 percent from the certified value. For calibration gas values not generally available, dilution systems calibrated using Method 205 may be used. Alternative methods for preparing calibration gas mixtures may be used with the approval of the Administrator.

5.1.1 Fuel. The FIA manufacturer's recommended fuel should be used. A 40 percent H_2/60 percent He or 40 percent H_2/60 percent N_2 gas mixture is recommended to avoid an oxygen synergism effect that reportedly occurs when oxygen concentration varies significantly from a mean value. Other mixtures may be used provided the tester can demonstrate to the Administrator that there is no oxygen synergism effect.

5.1.2 Carrier Gas. High purity air with less than 1 ppm of organic material (as propane or carbon equivalent) or less than 0.1 percent of the span value, whichever is greater.

5.1.3 FIA Linearity Calibration Gases. Low-, mid-, and high-range gas mixture standards with nominal propane concentrations of 20–30, 45–55, and 70–80 percent of the span value in air, respectively. Other calibration values and other span values may be used if it can be shown to the Administrator's satisfaction that equally accurate measurements would be achieved.

5.2 Particulate Filter. An in-stack or an out-of-stack glass fiber filter is recommended if exhaust gas particulate loading is significant. An out-of-stack filter must be heated to prevent any condensation unless it can be demonstrated that no condensation occurs.

6. Quality Control

6.1 Required instrument quality control parameters are found in the following sections:

6.1.1 The FIA system must be calibrated as specified in section 7.1.

6.1.2 The system drift check must be performed as specified in section 7.2.

6.1.3 The system check must be conducted as specified in section 7.3.

7. Calibration and Standardization

7.1 FIA Calibration and Linearity Check. Make necessary adjustments to the air and fuel supplies for the FIA and ignite the burner. Allow the FIA to warm up for the period recommended by the manufacturer. Inject a calibration gas into the measurement system and adjust the back-pressure regulator to the value required to achieve the flow rates specified by the manufacturer. Inject the zero-and the high-range calibration gases and adjust the analyzer calibration to provide the proper responses. Inject the low- and mid-range gases and record the responses of the measurement system. The calibration and linearity of the system are acceptable if the responses for all four gases are within 5 percent of the respective gas values. If the performance of the system is not acceptable, repair or adjust the system and repeat the linearity check. Conduct a calibration and linearity check after assembling the analysis system and after a major change is made to the system.

7.2 Systems Drift Checks. Select the calibration gas that most closely approximates the concentration of the captured emissions for conducting the drift checks. Introduce the zero and calibration gases at the calibration valve assembly and verify that the appropriate gas flow rate and pressure are present at the FIA. Record the measurement system responses to the zero and calibration gases. The performance of the system is acceptable if the difference between the drift check measurement and the value obtained in section 7.1 is less than 3 percent of the span value. Alternatively, recalibrate the FIA as in section 7.1 and report the results using both sets of calibration data (*i.e.*, data determined prior to the test period and data determined following the test period). The data that results in the lowest CE value shall be reported as the results for the test run. Conduct the system drift checks at the end of each run.

7.3 System Check. Inject the high-range calibration gas at the inlet of the sampling probe and record the response. The performance of the system is acceptable if the measurement system response is within 5 percent of the value obtained in section 7.1 for the high-range calibration gas. Conduct a system check before and after each test run.

8. Procedure

8.1. Determination of Volumetric Flow Rate of Captured Emissions.

8.1.1 Locate all points where emissions are captured from the affected facility. Using Method 1, determine the sampling points. Be sure to check each site for cyclonic or swirling flow.

8.1.2 Measure the velocity at each sampling site at least once every hour during each sampling run using Method 2 or 2A.

8.2 Determination of VOC Content of Captured Emissions.

8.2.1 Analysis Duration. Measure the VOC responses at each captured emissions point during the entire test run or, if applicable, while the process is operating. If there are multiple captured emission locations, design a sampling system to allow a single FIA to be used to determine the VOC responses at all sampling locations.

8.2.2 Gas VOC Concentration.

8.2.2.1 Assemble the sample train as shown in Figure 204B–1. Calibrate the FIA according to the procedure in section 7.1.

8.2.2.2 Conduct a system check according to the procedure in section 7.3.

8.2.2.3 Install the sample probe so that the probe is centrally located in the stack, pipe, or duct, and is sealed tightly at the stack port connection.

8.2.2.4 Inject zero gas at the calibration valve assembly. Allow the measurement system response to reach zero. Measure the system response time as the time required for the system to reach the effluent concentration after the calibration valve has been returned to the effluent sampling position.

8.2.2.5 Conduct a system check before, and a system drift check after, each sampling run according to the procedures in sections 7.2 and 7.3. If the drift check following a run indicates unacceptable performance (see section 7.3), the run is not valid. Alternatively, recalibrate the FIA as in section 7.1 and report the results using both sets of calibration data (*i.e.*, data determined prior to the test period and data determined following the test period). The data that results in the lowest CE value shall be reported as the results for the test run. The tester may elect to perform system drift checks during the run not to exceed one drift check per hour.

8.2.2.6 Verify that the sample lines, filter, and pump temperatures are 120 ±5 °C.

8.2.2.7 Begin sampling at the start of the test period and continue to sample during the entire run. Record the starting and ending times and any required process information as appropriate. If multiple captured emission locations are sampled using a single FIA, sample at each location for the same amount of time (e.g., 2 minutes) and continue to switch from one location to another for the entire test run. Be sure that total sampling time at each location is the same at the end of the test run. Collect at least four separate measurements from each sample point during each hour of testing. Disregard the measurements at each sampling location until two times the response time of the measurement system has elapsed. Continue sampling for at least 1 minute and record the concentration measurements.

8.2.3 Background Concentration.

NOTE: Not applicable when the building is used as the temporary total enclosure (TTE).

8.2.3.1 Locate all natural draft openings (NDO's) of the TTE. A sampling point shall be at the center of each NDO, unless otherwise specified by the Administrator. If there are more than six NDO's, choose six sampling points evenly spaced among the NDO's.

8.2.3.2 Assemble the sample train as shown in Figure 204B–2. Calibrate the FIA and conduct a system check according to the procedures in sections 7.1 and 7.3.

NOTE: This sample train shall be separate from the sample train used to measure the captured emissions.

8.2.3.3 Position the probe at the sampling location.

8.2.3.4 Determine the response time, conduct the system check, and sample according to the procedures described in sections 8.2.2.4 through 8.2.2.7.

8.2.4 Alternative Procedure. The direct interface sampling and analysis procedure described in section 7.2 of Method 18 may be used to determine the gas VOC concentration. The system must be designed to collect and analyze at least one sample every 10 minutes. If the alternative procedure is used to determine the VOC concentration of the captured emissions, it must also be used to determine the VOC concentration of the uncaptured emissions.

9. Data Analysis and Calculations

9.1 Nomenclature.

A_i=area of NDO i, ft^2.

A_N=total area of all NDO's in the enclosure, ft^2.

C_{Bi}=corrected average VOC concentration of background emissions at point i, ppm propane.

C_B=average background concentration, ppm propane.

C_{Gj}=corrected average VOC concentration of captured emissions at point j, ppm propane.

C_{DH}=average measured concentration for the drift check calibration gas, ppm propane.

C_{DO}=average system drift check concentration for zero concentration gas, ppm propane.

C_H=actual concentration of the drift check calibration gas, ppm propane.

C_i=uncorrected average background VOC concentration measured at point i, ppm propane.

C_j=uncorrected average VOC concentration measured at point j, ppm propane.

G=total VOC content of captured emissions, kg.

K_1=1.830×10^{-6} kg/(m^3-ppm).

n=number of measurement points.

Q_{Gj}=average effluent volumetric flow rate corrected to standard conditions at captured emissions point j, m^3/min.

Θ_C=total duration of captured emissions.

9.2 Calculations.

9.2.1 Total VOC Captured Emissions.

$$G = \sum_{j=1}^{n} \left(C_{Gj} - C_B\right) Q_{Gj} \theta_C K_1 \quad \text{Eq. 204B-1}$$

9.2.2 VOC Concentration of the Captured Emissions at Point j.

$$C_{Gj} = \left(C_j - C_{DO}\right) \frac{C_H}{C_{DH} - C_{DO}} \quad \text{Eq. 204B-2}$$

9.2.3 Background VOC Concentration at Point i.

$$C_{Bi} = \left(C_i - C_{DO}\right)\frac{C_H}{C_{DH} - C_{DO}} \quad \text{Eq. 204B-3}$$

9.2.4 Average Background Concentration.

$$C_B = \frac{\sum_{i=1}^{n} C_{Bi} A_i}{A_N} \quad \text{Eq. 204B-4}$$

NOTE: If the concentration at each point is within 20 percent of the average concentration of all points, then use the arithmetic average.

10. Method Performance

The measurement uncertainties are estimated for each captured or uncaptured emissions point as follows: Q_{Gj}=±5.5 percent and C_{Gj}=±5.0 percent. Based on these numbers, the probable uncertainty for G is estimated at about ±7.4 percent.

11. Diagrams

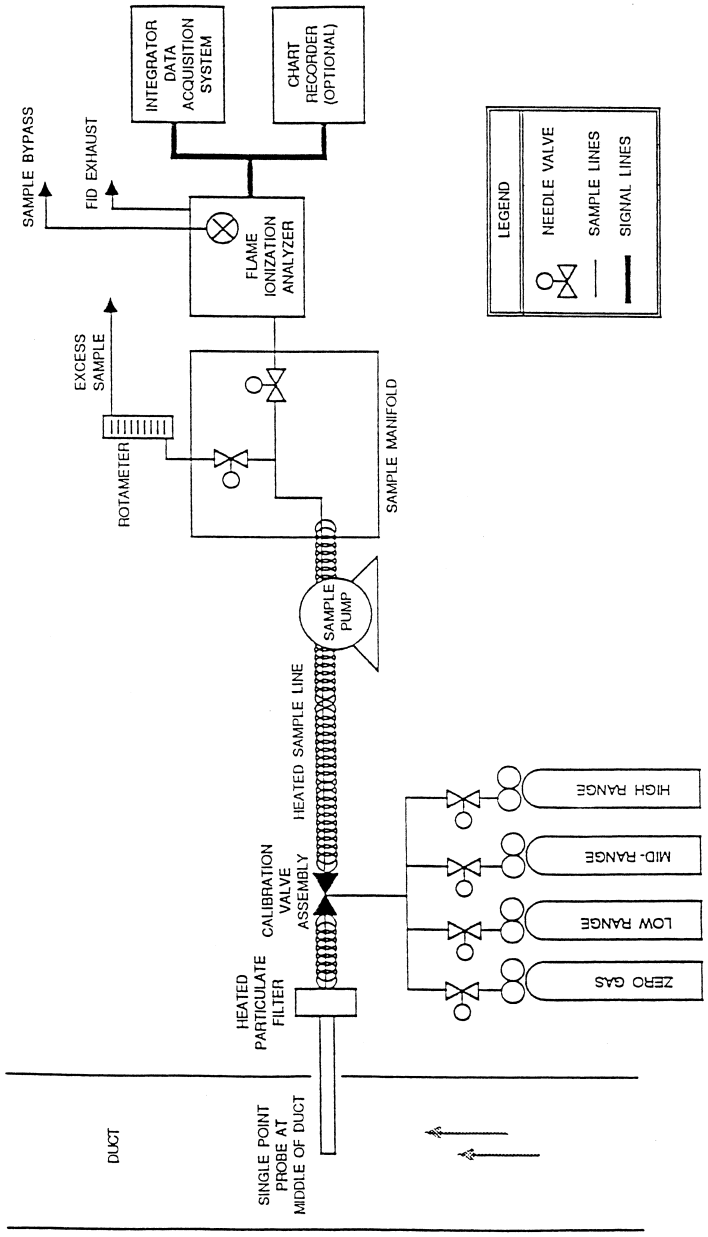

Figure 204B-1. Gas VOC concentration measurement system.

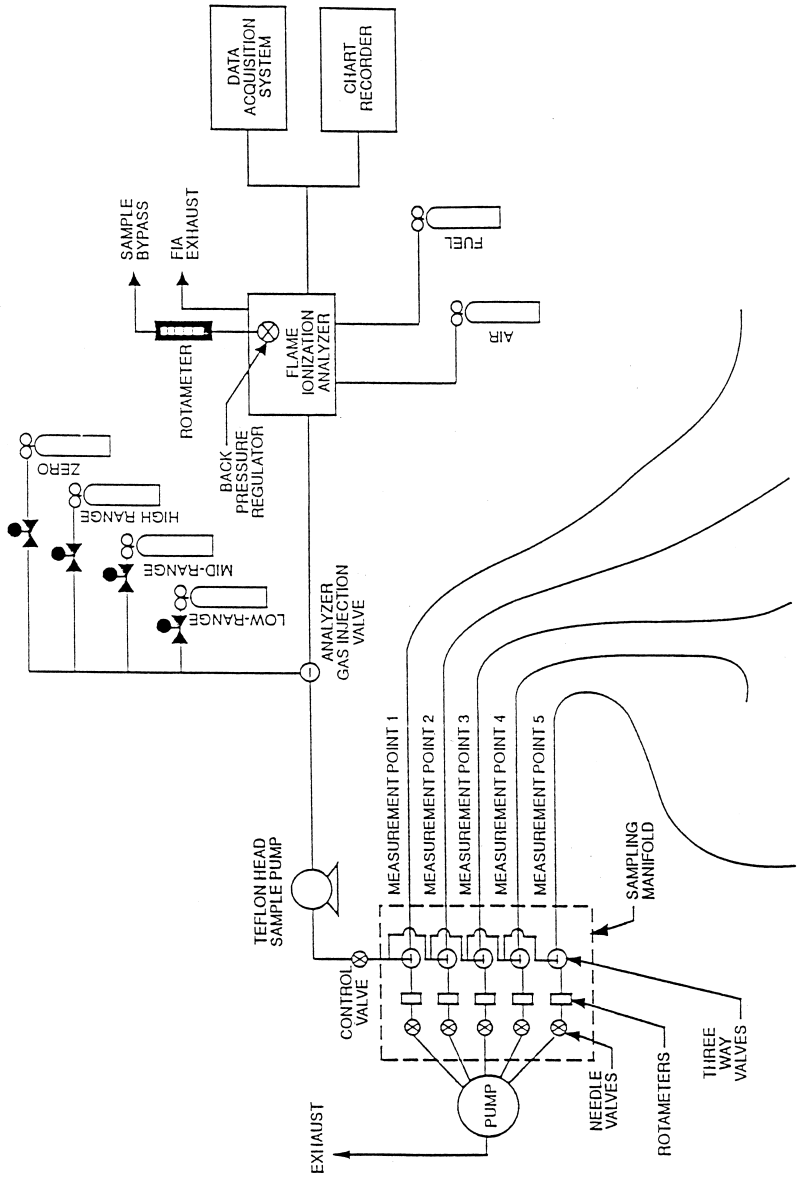

Figure 204B-2. Background measurement system.

METHOD 204C—VOLATILE ORGANIC COMPOUNDS EMISSIONS IN CAPTURED STREAM (DILUTION TECHNIQUE)

1. Scope and Application

1.1 Applicability. This procedure is applicable for determining the volatile organic compounds (VOC) content of captured gas streams. It is intended to be used in the development of a gas/gas protocol in which uncaptured emissions are also measured for determining VOC capture efficiency (CE) for surface coating and printing operations. A dilution system is used to reduce the VOC concentration of the captured emissions to about the same concentration as the uncaptured emissions. The procedure may not be acceptable in certain site-specific situations [e.g., when: (1) direct-fired heaters or other circumstances affect the quantity of VOC at the control device inlet; and (2) particulate organic aerosols are formed in the process and are present in the captured emissions].

1.2 Principle. The amount of VOC captured (G) is calculated as the sum of the products of the VOC content (C_{Gj}), the flow rate (Q_{Gj}), and the sampling time (Θ_C) from each captured emissions point.

1.3 Sampling Requirements. A CE test shall consist of at least three sampling runs. Each run shall cover at least one complete production cycle, but shall be at least 3 hours long. The sampling time for each run need not exceed 8 hours, even if the production cycle has not been completed. Alternative sampling times may be used with the approval of the Administrator.

2. Summary of Method

A gas sample is extracted from the source using an in-stack dilution probe through a heated sample line and, if necessary, a glass fiber filter to a flame ionization analyzer (FIA). The sample train contains a sample gas manifold which allows multiple points to be sampled using a single FIA.

3. Safety

Because this procedure is often applied in highly explosive areas, caution and care should be exercised in choosing, installing, and using the appropriate equipment.

4. Equipment and Supplies

Mention of trade names or company products does not constitute endorsement. All gas concentrations (percent, ppm) are by volume, unless otherwise noted.

4.1 Gas VOC Concentration. A schematic of the measurement system is shown in Figure 204C–1. The main components are as follows:

4.1.1 Dilution System. A Kipp in-stack dilution probe and controller or similar device may be used. The dilution rate may be changed by substituting different critical orifices or adjustments of the aspirator supply pressure. The dilution system shall be heated to prevent VOC condensation. Note: An out-of-stack dilution device may be used.

4.1.2 Calibration Valve Assembly. Three-way valve assembly at the outlet of the sample probe to direct the zero and calibration gases to the analyzer. Other methods, such as quick-connect lines, to route calibration gases to the outlet of the sample probe are acceptable.

4.1.3 Sample Line. Stainless steel or Teflon tubing to transport the sample gas to the analyzer. The sample line must be heated to prevent condensation.

4.1.4 Sample Pump. A leak-free pump, to pull the sample gas through the system at a flow rate sufficient to minimize the response time of the measurement system. The components of the pump that contact the gas stream shall be constructed of stainless steel or Teflon. The sample pump must be heated to prevent condensation.

4.1.5 Sample Flow Rate Control. A sample flow rate control valve and rotameter, or equivalent, to maintain a constant sampling rate within 10 percent. The flow control valve and rotameter must be heated to prevent condensation. A control valve may also be located on the sample pump bypass loop to assist in controlling the sample pressure and flow rate.

4.1.6 Sample Gas Manifold. Capable of diverting a portion of the sample gas stream to the FIA, and the remainder to the bypass discharge vent. The manifold components shall be constructed of stainless steel or Teflon. If captured or uncaptured emissions are to be measured at multiple locations, the measurement system shall be designed to use separate sampling probes, lines, and pumps for each measurement location and a common sample gas manifold and FIA. The sample gas manifold and connecting lines to the FIA must be heated to prevent condensation.

NOTE: Depending on the number of sampling points and their location, it may not be possible to use only one FIA. However to reduce the effect of calibration error, the number of FIA's used during a test should be keep as small as possible.

4.1.7 Organic Concentration Analyzer. An FIA with a span value of 1.5 times the expected concentration as propane; however, other span values may be used if it can be demonstrated to the Administrator's satisfaction that they would provide equally accurate measurements. The system shall be capable of meeting or exceeding the following specifications:

4.1.7.1 Zero Drift. Less than ±3.0 percent of the span value.

4.1.7.2 Calibration Drift. Less than ±3.0 percent of the span value.

4.1.7.3 Calibration Error. Less than ±5.0 percent of the calibration gas value.

4.1.7.4 Response Time. Less than 30 seconds.

4.1.8 Integrator/Data Acquisition System. An analog or digital device or computerized data acquisition system used to integrate the FIA response or compute the average response and record measurement data. The minimum data sampling frequency for computing average or integrated values is one measurement value every 5 seconds. The device shall be capable of recording average values at least once per minute.

4.2 Captured Emissions Volumetric Flow Rate.

4.2.1 Method 2 or 2A Apparatus. For determining volumetric flow rate.

4.2.2 Method 3 Apparatus and Reagents. For determining molecular weight of the gas stream. An estimate of the molecular weight of the gas stream may be used if approved by the Administrator.

4.2.3 Method 4 Apparatus and Reagents. For determining moisture content, if necessary.

5. Reagents and Standards

5.1 Calibration and Other Gases. Gases used for calibration, fuel, and combustion air (if required) are contained in compressed gas cylinders. All calibration gases shall be traceable to National Institute of Standards and Technology standards and shall be certified by the manufacturer to ±1 percent of the tag value. Additionally, the manufacturer of the cylinder should provide a recommended shelf life for each calibration gas cylinder over which the concentration does not change more than ±2 percent from the certified value. For calibration gas values not generally available, dilution systems calibrated using Method 205 may be used. Alternative methods for preparing calibration gas mixtures may be used with the approval of the Administrator.

5.1.1 Fuel. The FIA manufacturer's recommended fuel should be used. A 40 percent H_2/60 percent He or 40 percent H_2/60 percent N_2 gas mixture is recommended to avoid an oxygen synergism effect that reportedly occurs when oxygen concentration varies significantly from a mean value. Other mixtures may be used provided the tester can demonstrate to the Administrator that there is no oxygen synergism effect

5.1.2 Carrier Gas and Dilution Air Supply. High purity air with less than 1 ppm of organic material (as propane or carbon equivalent), or less than 0.1 percent of the span value, whichever is greater.

5.1.3 FIA Linearity Calibration Gases. Low-, mid-, and high-range gas mixture standards with nominal propane concentrations of 20–30, 45–55, and 70–80 percent of the span value in air, respectively. Other calibration values and other span values may be used if it can be shown to the Administrator's satisfaction that equally accurate measurements would be achieved.

5.1.4 Dilution Check Gas. Gas mixture standard containing propane in air, approximately half the span value after dilution.

5.2 Particulate Filter. An in-stack or an out-of-stack glass fiber filter is recommended if exhaust gas particulate loading is significant. An out-of-stack filter must be heated to prevent any condensation unless it can be demonstrated that no condensation occurs.

6. Quality Control

6.1 Required instrument quality control parameters are found in the following sections:

6.1.1 The FIA system must be calibrated as specified in section 7.1.

6.1.2 The system drift check must be performed as specified in section 7.2.

6.1.3 The dilution factor must be determined as specified in section 7.3.

6.1.4 The system check must be conducted as specified in section 7.4.

7. Calibration and Standardization

7.1 FIA Calibration and Linearity Check. Make necessary adjustments to the air and fuel supplies for the FIA and ignite the burner. Allow the FIA to warm up for the period recommended by the manufacturer. Inject a calibration gas into the measurement system after the dilution system and adjust the back-pressure regulator to the value required to achieve the flow rates specified by the manufacturer. Inject the zero-and the high-range calibration gases and adjust the analyzer calibration to provide the proper responses. Inject the low-and mid-range gases and record the responses of the measurement system. The calibration and linearity of the system are acceptable if the responses for all four gases are within 5 percent of the respective gas values. If the performance of the system is not acceptable, repair or adjust the system and repeat the linearity check. Conduct a calibration and linearity check after assembling the analysis system and after a major change is made to the system.

7.2 Systems Drift Checks. Select the calibration gas that most closely approximates the concentration of the diluted captured emissions for conducting the drift checks. Introduce the zero and calibration gases at the calibration valve assembly, and verify that the appropriate gas flow rate and pressure are present at the FIA. Record the measurement system responses to the zero and calibration gases. The performance of the system is acceptable if the difference between the drift check measurement and the value obtained in section 7.1 is less than 3 percent of the span value. Alternatively, recalibrate the FIA as in section 7.1 and report

the results using both sets of calibration data (*i.e.*, data determined prior to the test period and data determined following the test period). The data that results in the lowest CE value shall be reported as the results for the test run. Conduct the system drift check at the end of each run.

7.3 Determination of Dilution Factor. Inject the dilution check gas into the measurement system before the dilution system and record the response. Calculate the dilution factor using Equation 204C–3.

7.4 System Check. Inject the high-range calibration gas at the inlet to the sampling probe while the dilution air is turned off. Record the response. The performance of the system is acceptable if the measurement system response is within 5 percent of the value obtained in section 7.1 for the high-range calibration gas. Conduct a system check before and after each test run.

8. Procedure

8.1 Determination of Volumetric Flow Rate of Captured Emissions

8.1.1 Locate all points where emissions are captured from the affected facility. Using Method 1, determine the sampling points. Be sure to check each site for cyclonic or swirling flow.

8.2.2 Measure the velocity at each sampling site at least once every hour during each sampling run using Method 2 or 2A.

8.2 Determination of VOC Content of Captured Emissions

8.2.1 Analysis Duration. Measure the VOC responses at each captured emissions point during the entire test run or, if applicable, while the process is operating. If there are multiple captured emissions locations, design a sampling system to allow a single FIA to be used to determine the VOC responses at all sampling locations.

8.2.2 Gas VOC Concentration.

8.2.2.1 Assemble the sample train as shown in Figure 204C–1. Calibrate the FIA according to the procedure in section 7.1.

8.2.2.2 Set the dilution ratio and determine the dilution factor according to the procedure in section 7.3.

8.2.2.3 Conduct a system check according to the procedure in section 7.4.

8.2.2.4 Install the sample probe so that the probe is centrally located in the stack, pipe, or duct, and is sealed tightly at the stack port connection.

8.2.2.5 Inject zero gas at the calibration valve assembly. Measure the system response time as the time required for the system to reach the effluent concentration after the calibration valve has been returned to the effluent sampling position.

8.2.2.6 Conduct a system check before, and a system drift check after, each sampling run according to the procedures in sections 7.2 and 7.4. If the drift check following a run indicates unacceptable performance (see section 7.4), the run is not valid. Alternatively, recalibrate the FIA as in section 7.1 and report the results using both sets of calibration data (*i.e.*, data determined prior to the test period and data determined following the test period). The data that results in the lowest CE value shall be reported as the results for the test run. The tester may elect to perform system drift checks during the run not to exceed one drift check per hour.

8.2.2.7 Verify that the sample lines, filter, and pump temperatures are 120 ±5 °C.

8.2.2.8 Begin sampling at the start of the test period and continue to sample during the entire run. Record the starting and ending times and any required process information as appropriate. If multiple captured emission locations are sampled using a single FIA, sample at each location for the same amount of time (e.g., 2 min.) and continue to switch from one location to another for the entire test run. Be sure that total sampling time at each location is the same at the end of the test run. Collect at least four separate measurements from each sample point during each hour of testing. Disregard the measurements at each sampling location until two times the response time of the measurement system has elapsed. Continue sampling for at least 1 minute and record the concentration measurements.

8.2.3 Background Concentration.

NOTE: Not applicable when the building is used as the temporary total enclosure (TTE).

8.2.3.1 Locate all natural draft openings (NDO's) of the TTE. A sampling point shall be at the center of each NDO, unless otherwise approved by the Administrator. If there are more than six NDO's, choose six sampling points evenly spaced among the NDO's.

8.2.3.2 Assemble the sample train as shown in Figure 204C–2. Calibrate the FIA and conduct a system check according to the procedures in sections 7.1 and 7.4.

8.2.3.3 Position the probe at the sampling location.

8.2.3.4 Determine the response time, conduct the system check, and sample according to the procedures described in sections 8.2.2.4 through 8.2.2.8.

8.2.4 Alternative Procedure. The direct interface sampling and analysis procedure described in section 7.2 of Method 18 may be used to determine the gas VOC concentration. The system must be designed to collect and analyze at least one sample every 10 minutes. If the alternative procedure is used to determine the VOC concentration of the captured emissions, it must also be used to determine the VOC concentration of the uncaptured emissions.

9. Data Analysis and Calculations

9.1 Nomenclature.

A_i=area of NDO i, ft^2.

A_N=total area of all NDO's in the enclosure, ft^2.
C_A=actual concentration of the dilution check gas, ppm propane.
C_{Bi}=corrected average VOC concentration of background emissions at point i, ppm propane.
C_B=average background concentration, ppm propane.
C_{DH}=average measured concentration for the drift check calibration gas, ppm propane.
C_{D0}=average system drift check concentration for zero concentration gas, ppm propane.
C_H=actual concentration of the drift check calibration gas, ppm propane.
C_i=uncorrected average background VOC concentration measured at point i, ppm propane.
C_j=uncorrected average VOC concentration measured at point j, ppm propane.
C_M=measured concentration of the dilution check gas, ppm propane.
DF=dilution factor.
G=total VOC content of captured emissions, kg.
K_1=1.830×10^{-6} kg/(m^3 – ppm).
n=number of measurement points.
Q_{Gj}=average effluent volumetric flow rate corrected to standard conditions at captured emissions point j, m^3/min.
Θ_C=total duration of CE sampling run, min.

9.2 Calculations.

9.2.1 Total VOC Captured Emissions.

$$G = \sum_{j=1}^{n}\left(C_{Gj} - C_B\right)Q_{Gj}\theta_C K_1 \quad \text{Eq. 204C-1}$$

9.2.2 VOC Concentration of the Captured Emissions at Point j.

$$C_{Gj} = DF\left(C_j - C_{DO}\right)\frac{C_H}{C_{DH} - C_{DO}} \quad \text{Eq. 204C-2}$$

9.2.3 Dilution Factor.

$$DF = \frac{C_A}{C_M} \quad \text{Eq. 204C-3}$$

9.2.4 Background VOC Concentration at Point i.

$$C_{Bi} = \left(C_i - C_{DO}\right)\frac{C_H}{C_{DH} - C_{DO}} \quad \text{Eq. 204C-4}$$

9.2.5 Average Background Concentration.

$$C_B = \frac{\sum_{i=1}^{n} C_{Bi}A_i}{A_N} \quad \text{Eq. 204C-5}$$

NOTE: If the concentration at each point is within 20 percent of the average concentration of all points, then use the arithmetic average.

10. Method Performance

The measurement uncertainties are estimated for each captured or uncaptured emissions point as follows: Q_{Gj}=±5.5 percent and C_{Gj}= ±5 percent. Based on these numbers, the probable uncertainty for G is estimated at about ±7.4 percent.

11. Diagrams

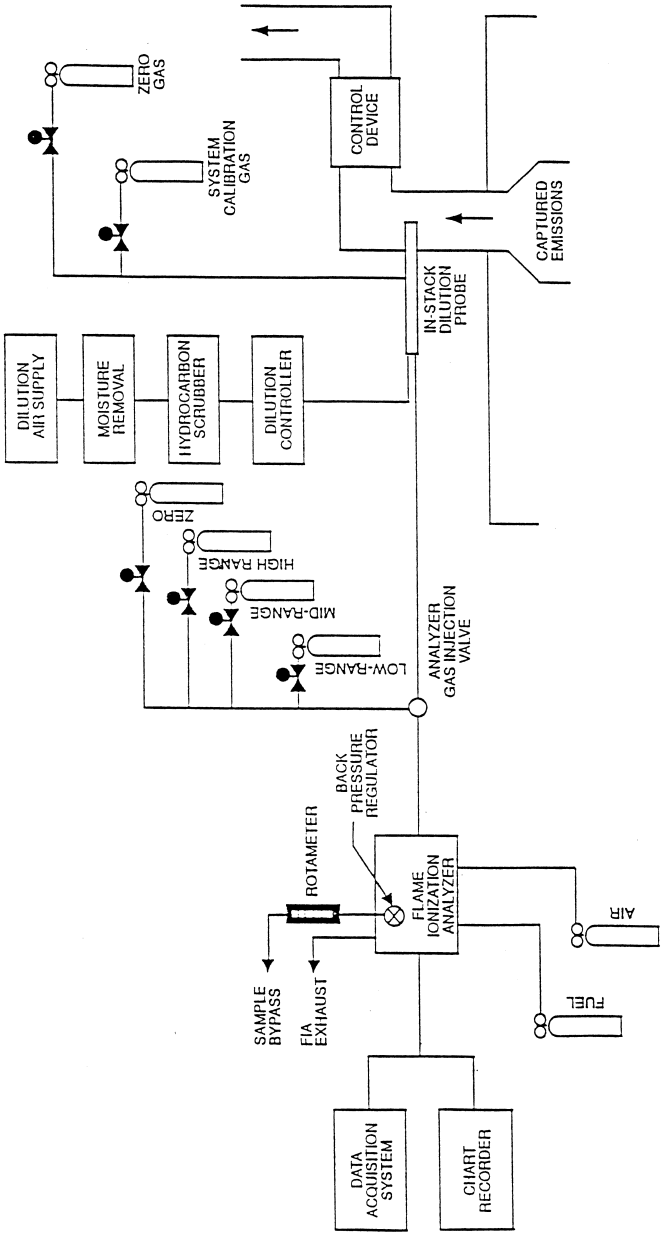

Figure 204C-1. Captured emissions measurement system.

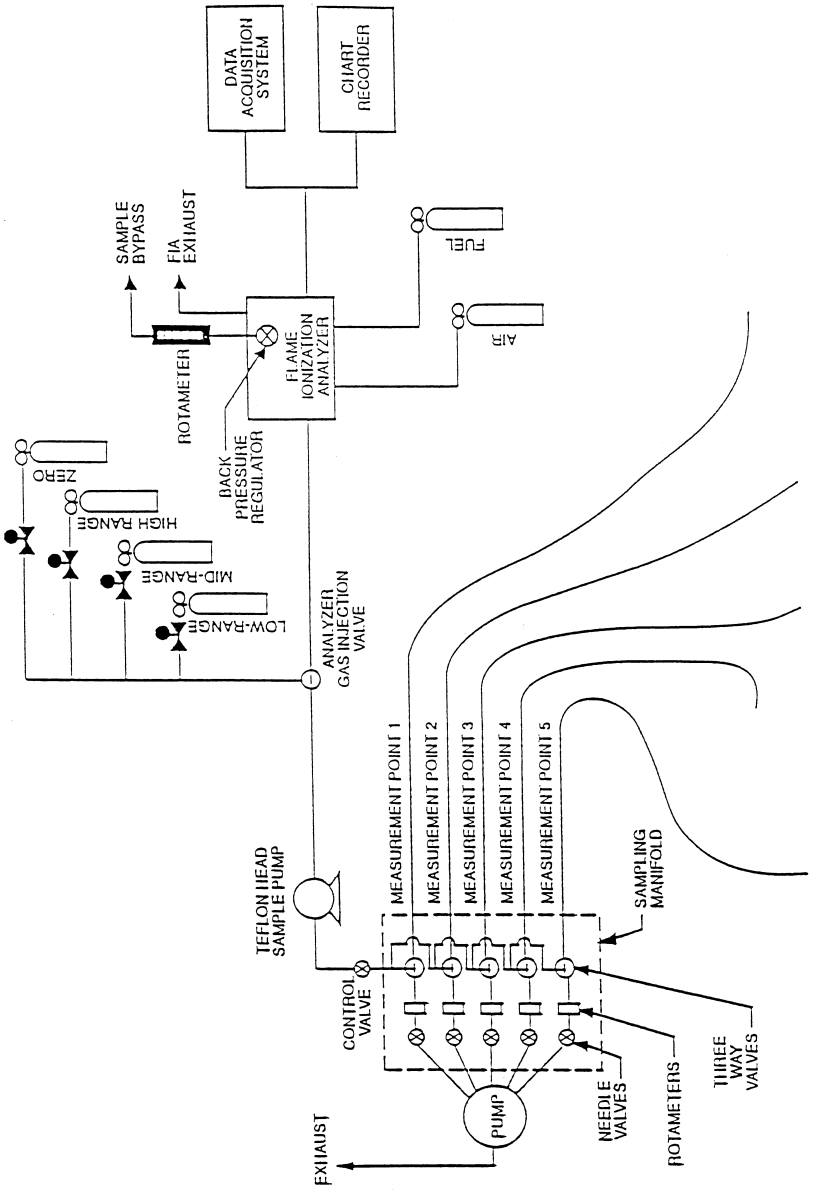

Figure 204C-2. Background measurement system.

METHOD 204D—VOLATILE ORGANIC COMPOUNDS EMISSIONS IN UNCAPTURED STREAM FROM TEMPORARY TOTAL ENCLOSURE

1. Scope and Application

1.1 Applicability. This procedure is applicable for determining the uncaptured volatile organic compounds (VOC) emissions from a temporary total enclosure (TTE). It is intended to be used as a segment in the development of liquid/gas or gas/gas protocols for determining VOC capture efficiency (CE) for surface coating and printing operations.

1.2 Principle. The amount of uncaptured VOC emissions (F) from the TTE is calculated as the sum of the products of the VOC content (C_{Fj}), the flow rate (Q_{Fj}) from each uncaptured emissions point, and the sampling time (Θ_F).

1.3 Sampling Requirements. A CE test shall consist of at least three sampling runs. Each run shall cover at least one complete production cycle, but shall be at least 3 hours long. The sampling time for each run need not exceed 8 hours, even if the production cycle has not been completed. Alternative sampling times may be used with the approval of the Administrator.

2. Summary of Method

A gas sample is extracted from the uncaptured exhaust duct of a TTE through a heated sample line and, if necessary, a glass fiber filter to a flame ionization analyzer (FIA).

3. Safety

Because this procedure is often applied in highly explosive areas, caution and care should be exercised in choosing, installing, and using the appropriate equipment.

4. Equipment and Supplies

Mention of trade names or company products does not constitute endorsement. All gas concentrations (percent, ppm) are by volume, unless otherwise noted.

4.1 Gas VOC Concentration. A schematic of the measurement system is shown in Figure 204D–1. The main components are as follows:

4.1.1 Sample Probe. Stainless steel or equivalent. The probe shall be heated to prevent VOC condensation.

4.1.2 Calibration Valve Assembly. Three-way valve assembly at the outlet of the sample probe to direct the zero and calibration gases to the analyzer. Other methods, such as quick-connect lines, to route calibration gases to the outlet of the sample probe are acceptable.

4.1.3 Sample Line. Stainless steel or Teflon tubing to transport the sample gas to the analyzer. The sample line must be heated to prevent condensation.

4.1.4 Sample Pump. A leak-free pump, to pull the sample gas through the system at a flow rate sufficient to minimize the response time of the measurement system. The components of the pump that contact the gas stream shall be constructed of stainless steel or Teflon. The sample pump must be heated to prevent condensation.

4.1.5 Sample Flow Rate Control. A sample flow rate control valve and rotameter, or equivalent, to maintain a constant sampling rate within 10 percent. The flow control valve and rotameter must be heated to prevent condensation. A control valve may also be located on the sample pump bypass loop to assist in controlling the sample pressure and flow rate.

4.1.6 Sample Gas Manifold. Capable of diverting a portion of the sample gas stream to the FIA, and the remainder to the bypass discharge vent. The manifold components shall be constructed of stainless steel or Teflon. If emissions are to be measured at multiple locations, the measurement system shall be designed to use separate sampling probes, lines, and pumps for each measurement location and a common sample gas manifold and FIA. The sample gas manifold and connecting lines to the FIA must be heated to prevent condensation.

4.1.7 Organic Concentration Analyzer. An FIA with a span value of 1.5 times the expected concentration as propane; however, other span values may be used if it can be demonstrated to the Administrator's satisfaction that they would provide more accurate measurements. The system shall be capable of meeting or exceeding the following specifications:

4.1.7.1 Zero Drift. Less than ±3.0 percent of the span value.

4.1.7.2 Calibration Drift. Less than ±3.0 percent of the span value.

4.1.7.3 Calibration Error. Less than ±5.0 percent of the calibration gas value.

4.1.7.4 Response Time. Less than 30 seconds.

4.1.8 Integrator/Data Acquisition System. An analog or digital device or computerized data acquisition system used to integrate the FIA response or compute the average response and record measurement data. The minimum data sampling frequency for computing average or integrated values is one measurement value every 5 seconds. The device shall be capable of recording average values at least once per minute.

4.2 Uncaptured Emissions Volumetric Flow Rate.

4.2.1 Method 2 or 2A Apparatus. For determining volumetric flow rate.

4.2.2 Method 3 Apparatus and Reagents. For determining molecular weight of the gas stream. An estimate of the molecular weight of the gas stream may be used if approved by the Administrator.

4.2.3 Method 4 Apparatus and Reagents. For determining moisture content, if necessary.

4.3 Temporary Total Enclosure. The criteria for designing an acceptable TTE are specified in Method 204.

5. Reagents and Standards

5.1 Calibration and Other Gases. Gases used for calibration, fuel, and combustion air (if required) are contained in compressed gas cylinders. All calibration gases shall be traceable to National Institute of Standards and Technology standards and shall be certified by the manufacturer to ±1 percent of

the tag value. Additionally, the manufacturer of the cylinder should provide a recommended shelf life for each calibration gas cylinder over which the concentration does not change more than ±2 percent from the certified value. For calibration gas values not generally available, dilution systems calibrated using Method 205 may be used. Alternative methods for preparing calibration gas mixtures may be used with the approval of the Administrator.

5.1.1 Fuel. The FIA manufacturer's recommended fuel should be used. A 40 percent H_2/60 percent He or 40 percent H_2/60 percent N_2 gas mixture is recommended to avoid an oxygen synergism effect that reportedly occurs when oxygen concentration varies significantly from a mean value. Other mixtures may be used provided the tester can demonstrate to the Administrator that there is no oxygen synergism effect.

5.1.2 Carrier Gas. High purity air with less than 1 ppm of organic material (as propane or carbon equivalent) or less than 0.1 percent of the span value, whichever is greater.

5.1.3 FIA Linearity Calibration Gases. Low-, mid-, and high-range gas mixture standards with nominal propane concentrations of 20–30, 45–55, and 70–80 percent of the span value in air, respectively. Other calibration values and other span values may be used if it can be shown to the Administrator's satisfaction that equally accurate measurements would be achieved.

5.2 Particulate Filter. An in-stack or an out-of-stack glass fiber filter is recommended if exhaust gas particulate loading is significant. An out-of-stack filter must be heated to prevent any condensation unless it can be demonstrated that no condensation occurs.

6. Quality Control

6.1 Required instrument quality control parameters are found in the following sections:

6.1.1 The FIA system must be calibrated as specified in section 7.1.

6.1.2 The system drift check must be performed as specified in section 7.2.

6.1.3 The system check must be conducted as specified in section 7.3.

7. Calibration and Standardization

7.1 FIA Calibration and Linearity Check. Make necessary adjustments to the air and fuel supplies for the FIA and ignite the burner. Allow the FIA to warm up for the period recommended by the manufacturer. Inject a calibration gas into the measurement system and adjust the back-pressure regulator to the value required to achieve the flow rates specified by the manufacturer. Inject the zero-and the high-range calibration gases and adjust the analyzer calibration to provide the proper responses. Inject the low-and mid-range gases and record the responses of the measurement system. The calibration and linearity of the system are acceptable if the responses for all four gases are within 5 percent of the respective gas values. If the performance of the system is not acceptable, repair or adjust the system and repeat the linearity check. Conduct a calibration and linearity check after assembling the analysis system and after a major change is made to the system.

7.2 Systems Drift Checks. Select the calibration gas concentration that most closely approximates that of the uncaptured gas emissions concentration to conduct the drift checks. Introduce the zero and calibration gases at the calibration valve assembly and verify that the appropriate gas flow rate and pressure are present at the FIA. Record the measurement system responses to the zero and calibration gases. The performance of the system is acceptable if the difference between the drift check measurement and the value obtained in section 7.1 is less than 3 percent of the span value. Alternatively, recalibrate the FIA as in section 7.1 and report the results using both sets of calibration data (*i.e.*, data determined prior to the test period and data determined following the test period). The data that results in the lowest CE value shall be reported as the results for the test run. Conduct a system drift check at the end of each run.

7.3 System Check. Inject the high-range calibration gas at the inlet of the sampling probe and record the response. The performance of the system is acceptable if the measurement system response is within 5 percent of the value obtained in section 7.1 for the high-range calibration gas. Conduct a system check before each test run.

8. Procedure

8.1 Determination of Volumetric Flow Rate of Uncaptured Emissions

8.1.1 Locate all points where uncaptured emissions are exhausted from the TTE. Using Method 1, determine the sampling points. Be sure to check each site for cyclonic or swirling flow.

8.1.2 Measure the velocity at each sampling site at least once every hour during each sampling run using Method 2 or 2A.

8.2 Determination of VOC Content of Uncaptured Emissions.

8.2.1 Analysis Duration. Measure the VOC responses at each uncaptured emission point during the entire test run or, if applicable, while the process is operating. If there are multiple emission locations, design a sampling system to allow a single FIA to be used to determine the VOC responses at all sampling locations.

8.2.2 Gas VOC Concentration.

8.2.2.1 Assemble the sample train as shown in Figure 204D–1. Calibrate the FIA and conduct a system check according to the

procedures in sections 7.1 and 7.3, respectively.

8.2.2.2 Install the sample probe so that the probe is centrally located in the stack, pipe, or duct, and is sealed tightly at the stack port connection.

8.2.2.3 Inject zero gas at the calibration valve assembly. Allow the measurement system response to reach zero. Measure the system response time as the time required for the system to reach the effluent concentration after the calibration valve has been returned to the effluent sampling position.

8.2.2.4 Conduct a system check before, and a system drift check after, each sampling run according to the procedures in sections 7.2 and 7.3. If the drift check following a run indicates unacceptable performance (see section 7.3), the run is not valid. Alternatively, recalibrate the FIA as in section 7.1 and report the results using both sets of calibration data (*i.e.*, data determined prior to the test period and data determined following the test period). The data that results in the lowest CE value shall be reported as the results for the test run. The tester may elect to perform system drift checks during the run not to exceed one drift check per hour.

8.2.2.5 Verify that the sample lines, filter, and pump temperatures are 120 ±5 °C.

8.2.2.6 Begin sampling at the start of the test period and continue to sample during the entire run. Record the starting and ending times and any required process information, as appropriate. If multiple emission locations are sampled using a single FIA, sample at each location for the same amount of time (e.g., 2 min.) and continue to switch from one location to another for the entire test run. Be sure that total sampling time at each location is the same at the end of the test run. Collect at least four separate measurements from each sample point during each hour of testing. Disregard the response measurements at each sampling location until 2 times the response time of the measurement system has elapsed. Continue sampling for at least 1 minute and record the concentration measurements.

8.2.3 Background Concentration.

8.2.3.1 Locate all natural draft openings (NDO's) of the TTE. A sampling point shall be at the center of each NDO, unless otherwise approved by the Administrator. If there are more than six NDO's, choose six sampling points evenly spaced among the NDO's.

8.2.3.2 Assemble the sample train as shown in Figure 204D–2. Calibrate the FIA and conduct a system check according to the procedures in sections 7.1 and 7.3.

8.2.3.3 Position the probe at the sampling location.

8.2.3.4 Determine the response time, conduct the system check, and sample according to the procedures described in sections 8.2.2.3 through 8.2.2.6.

8.2.4 Alternative Procedure. The direct interface sampling and analysis procedure described in section 7.2 of Method 18 may be used to determine the gas VOC concentration. The system must be designed to collect and analyze at least one sample every 10 minutes. If the alternative procedure is used to determine the VOC concentration of the uncaptured emissions in a gas/gas protocol, it must also be used to determine the VOC concentration of the captured emissions. If a tester wishes to conduct a liquid/gas protocol using a gas chromatograph, the tester must use Method 204F for the liquid steam. A gas chromatograph is not an acceptable alternative to the FIA in Method 204A.

9. Data Analysis and Calculations

9.1 Nomenclature.

A_i=area of NDO i, ft^2.

A_N=total area of all NDO's in the enclosure, ft^2.

C_{Bi}=corrected average VOC concentration of background emissions at point i, ppm propane.

C_B=average background concentration, ppm propane.

C_{DH}=average measured concentration for the drift check calibration gas, ppm propane.

C_{DO}=average system drift check concentration for zero concentration gas, ppm propane.

C_{Fj}=corrected average VOC concentration of uncaptured emissions at point j, ppm propane.

C_H=actual concentration of the drift check calibration gas, ppm propane.

C_i=uncorrected average background VOC concentration at point i, ppm propane.

C_j=uncorrected average VOC concentration measured at point j, ppm propane.

F=total VOC content of uncaptured emissions, kg.

K_1=1.830×10^{-6} kg/(m^3-ppm).

n=number of measurement points.

Q_{Fj}=average effluent volumetric flow rate corrected to standard conditions at uncaptured emissions point j, m^3/min.

Θ_F=total duration of uncaptured emissions sampling run, min.

9.2 Calculations.

9.2.1 Total Uncaptured VOC Emissions.

$$F = \sum_{j=1}^{n} \left(C_{Fj} - C_B\right) Q_{Fj} \theta_F K_1 \quad \text{Eq. 204D-1}$$

9.2.2 VOC Concentration of the Uncaptured Emissions at Point j.

$$C_{Fj} = \left(C_j - C_{DO}\right) \frac{C_H}{C_{DH} - C_{DO}} \quad \text{Eq. 204D-2}$$

9.2.3 Background VOC Concentration at Point i.

$$C_{Bi} = \left(C_i - C_{DO}\right)\frac{C_H}{C_{DH} - C_{DO}} \quad \text{Eq. 204D-3}$$

9.2.4 Average Background Concentration.

$$C_B = \frac{\sum_{i=1}^{n} C_{Bi} A_i}{A_N} \quad \text{Eq. 204D-4}$$

NOTE: If the concentration at each point is within 20 percent of the average concentration of all points, use the arithmetic average.

10. Method Performance

The measurement uncertainties are estimated for each uncaptured emission point as follows: Q_{Fj}=±5.5 percent and C_{Fj}=±5.0 percent. Based on these numbers, the probable uncertainty for F is estimated at about ±7.4 percent.

11. Diagrams

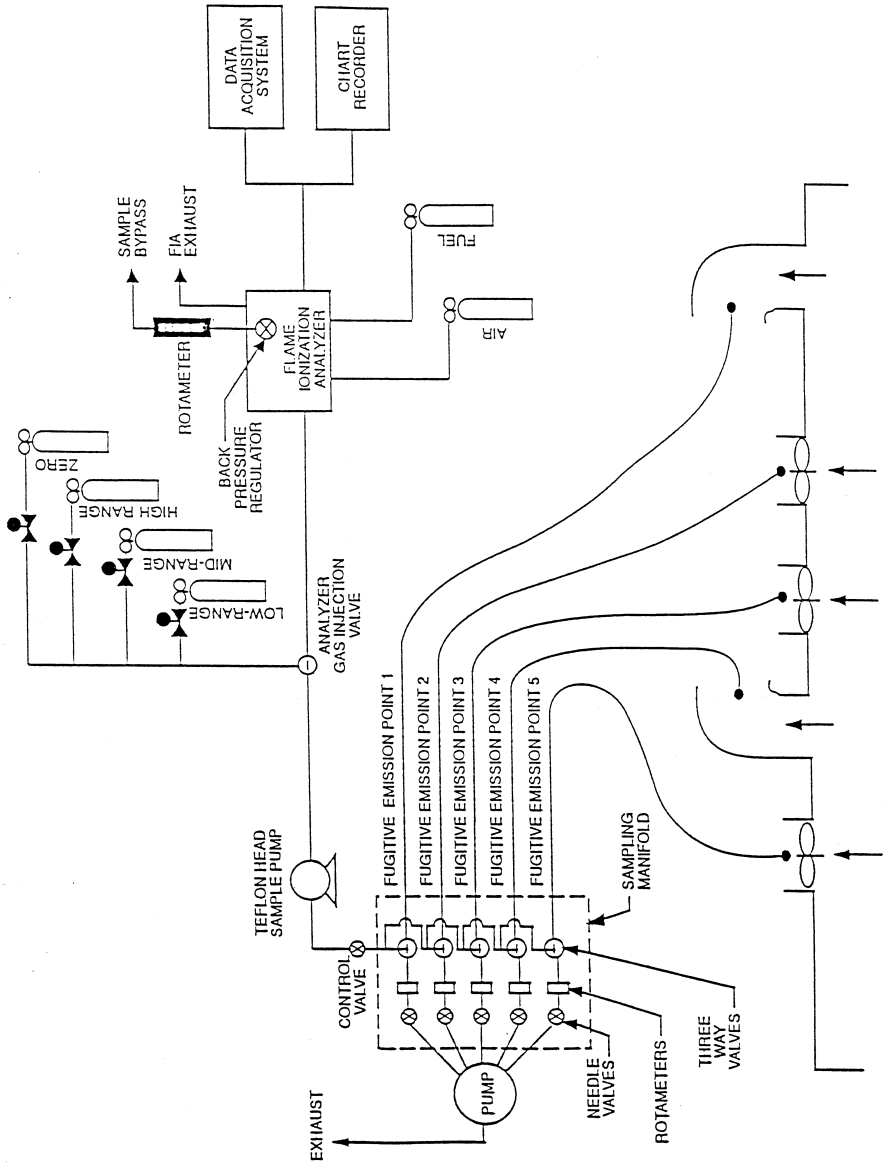

Figure 204D-1. Fugitive emissions measurement system.

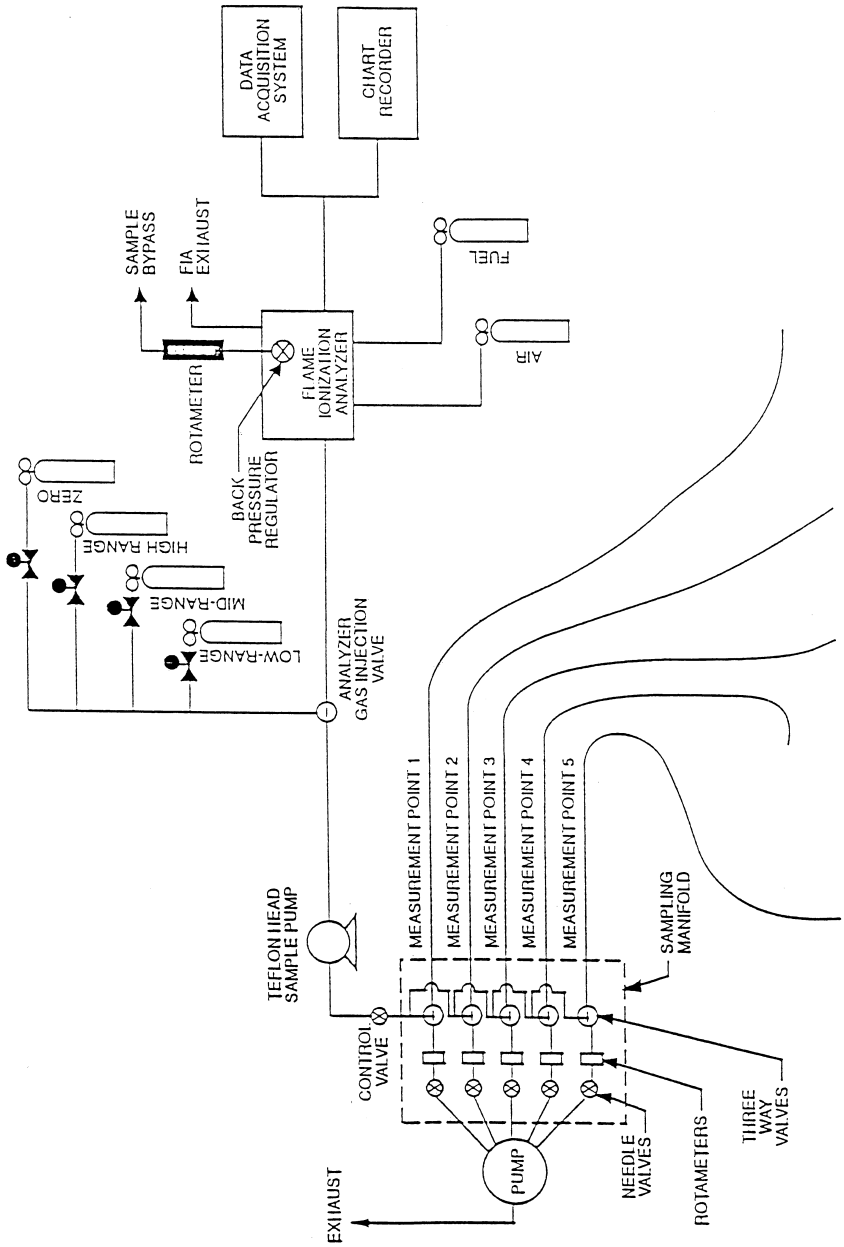

Figure 204D-2. Background measurement system.

METHOD 204E—VOLATILE ORGANIC COMPOUNDS EMISSIONS IN UNCAPTURED STREAM FROM BUILDING ENCLOSURE

1. Scope and Application

1.1 Applicability. This procedure is applicable for determining the uncaptured volatile organic compounds (VOC) emissions from a building enclosure (BE). It is intended to be used in the development of liquid/gas or gas/gas protocols for determining VOC capture efficiency (CE) for surface coating and printing operations.

1.2 Principle. The total amount of uncaptured VOC emissions (F_B) from the BE is calculated as the sum of the products of the VOC content (C_{Fj}) of each uncaptured emissions point, the flow rate (Q_{Fj}) at each uncaptured emissions point, and time (Θ_F).

1.3 Sampling Requirements. A CE test shall consist of at least three sampling runs. Each run shall cover at least one complete production cycle, but shall be at least 3 hours long. The sampling time for each run need not exceed 8 hours, even if the production cycle has not been completed. Alternative sampling times may be used with the approval of the Administrator.

2. Summary of Method

A gas sample is extracted from the uncaptured exhaust duct of a BE through a heated sample line and, if necessary, a glass fiber filter to a flame ionization analyzer (FIA).

3. Safety

Because this procedure is often applied in highly explosive areas, caution and care should be exercised in choosing, installing, and using the appropriate equipment.

4. Equipment and Supplies

Mention of trade names or company products does not constitute endorsement. All gas concentrations (percent, ppm) are by volume, unless otherwise noted.

4.1 Gas VOC Concentration. A schematic of the measurement system is shown in Figure 204E–1. The main components are as follows:

4.1.1 Sample Probe. Stainless steel or equivalent. The probe shall be heated to prevent VOC condensation.

4.1.2 Calibration Valve Assembly. Three-way valve assembly at the outlet of the sample probe to direct the zero and calibration gases to the analyzer. Other methods, such as quick-connect lines, to route calibration gases to the outlet of the sample probe are acceptable.

4.1.3 Sample Line. Stainless steel or Teflon tubing to transport the sample gas to the analyzer. The sample line must be heated to prevent condensation.

4.1.4 Sample Pump. A leak-free pump, to pull the sample gas through the system at a flow rate sufficient to minimize the response time of the measurement system. The components of the pump that contact the gas stream shall be constructed of stainless steel or Teflon. The sample pump must be heated to prevent condensation.

4.1.5 Sample Flow Rate Control. A sample flow rate control valve and rotameter, or equivalent, to maintain a constant sampling rate within 10 percent. The flow rate control valve and rotameter must be heated to prevent condensation. A control valve may also be located on the sample pump bypass loop to assist in controlling the sample pressure and flow rate.

4.1.6 Sample Gas Manifold. Capable of diverting a portion of the sample gas stream to the FIA, and the remainder to the bypass discharge vent. The manifold components shall be constructed of stainless steel or Teflon. If emissions are to be measured at multiple locations, the measurement system shall be designed to use separate sampling probes, lines, and pumps for each measurement location, and a common sample gas manifold and FIA. The sample gas manifold must be heated to prevent condensation.

4.1.7 Organic Concentration Analyzer. An FIA with a span value of 1.5 times the expected concentration as propane; however, other span values may be used if it can be demonstrated to the Administrator's satisfaction that they would provide equally accurate measurements. The system shall be capable of meeting or exceeding the following specifications:

4.1.7.1 Zero Drift. Less than ±3.0 percent of the span value.

4.1.7.2 Calibration Drift. Less than ±3.0 percent of the span value.

4.1.7.3 Calibration Error. Less than ±5.0 percent of the calibration gas value.

4.1.7.4 Response Time. Less than 30 seconds.

4.1.8 Integrator/Data Acquisition System. An analog or digital device or computerized data acquisition system used to integrate the FIA response or compute the average response and record measurement data. The minimum data sampling frequency for computing average or integrated values is one measurement value every 5 seconds. The device shall be capable of recording average values at least once per minute.

4.2 Uncaptured Emissions Volumetric Flow Rate.

4.2.1 Flow Direction Indicators. Any means of indicating inward or outward flow, such as light plastic film or paper streamers, smoke tubes, filaments, and sensory perception.

4.2.2 Method 2 or 2A Apparatus. For determining volumetric flow rate. Anemometers or similar devices calibrated according to the manufacturer's instructions may be used

when low velocities are present. Vane anemometers (Young-maximum response propeller), specialized pitots with electronic manometers (e.g., Shortridge Instruments Inc., Airdata Multimeter 860) are commercially available with measurement thresholds of 15 and 8 mpm (50 and 25 fpm), respectively.

4.2.3 Method 3 Apparatus and Reagents. For determining molecular weight of the gas stream. An estimate of the molecular weight of the gas stream may be used if approved by the Administrator.

4.2.4 Method 4 Apparatus and Reagents. For determining moisture content, if necessary.

4.3 Building Enclosure. The criteria for an acceptable BE are specified in Method 204.

5. Reagents and Standards

5.1 Calibration and Other Gases. Gases used for calibration, fuel, and combustion air (if required) are contained in compressed gas cylinders. All calibration gases shall be traceable to National Institute of Standards and Technology standards and shall be certified by the manufacturer to ±1 percent of the tag value. Additionally, the manufacturer of the cylinder should provide a recommended shelf life for each calibration gas cylinder over which the concentration does not change more than ±2 percent from the certified value. For calibration gas values not generally available, dilution systems calibrated using Method 205 may be used. Alternative methods for preparing calibration gas mixtures may be used with the approval of the Administrator.

5.1.1 Fuel. The FIA manufacturer's recommended fuel should be used. A 40 percent H_2/60 percent He or 40 percent H_2/60 percent N_2 gas mixture is recommended to avoid an oxygen synergism effect that reportedly occurs when oxygen concentration varies significantly from a mean value. Other mixtures may be used provided the tester can demonstrate to the Administrator that there is no oxygen synergism effect.

5.1.2 Carrier Gas. High purity air with less than 1 ppm of organic material (propane or carbon equivalent) or less than 0.1 percent of the span value, whichever is greater.

5.1.3 FIA Linearity Calibration Gases. Low-, mid-, and high-range gas mixture standards with nominal propane concentrations of 20–30, 45–55, and 70–80 percent of the span value in air, respectively. Other calibration values and other span values may be used if it can be shown to the Administrator's satisfaction that equally accurate measurements would be achieved.

5.2 Particulate Filter. An in-stack or an out-of-stack glass fiber filter is recommended if exhaust gas particulate loading is significant. An out-of-stack filter must be heated to prevent any condensation unless it can be demonstrated that no condensation occurs.

6. Quality Control

6.1 Required instrument quality control parameters are found in the following sections:

6.1.1 The FIA system must be calibrated as specified in section 7.1.

6.1.2 The system drift check must be performed as specified in section 7.2.

6.1.3 The system check must be conducted as specified in section 7.3.

7. Calibration and Standardization

7.1 FIA Calibration and Linearity Check. Make necessary adjustments to the air and fuel supplies for the FIA and ignite the burner. Allow the FIA to warm up for the period recommended by the manufacturer. Inject a calibration gas into the measurement system and adjust the back-pressure regulator to the value required to achieve the flow rates specified by the manufacturer. Inject the zero-and the high-range calibration gases, and adjust the analyzer calibration to provide the proper responses. Inject the low- and mid-range gases and record the responses of the measurement system. The calibration and linearity of the system are acceptable if the responses for all four gases are within 5 percent of the respective gas values. If the performance of the system is not acceptable, repair or adjust the system and repeat the linearity check. Conduct a calibration and linearity check after assembling the analysis system and after a major change is made to the system.

7.2 Systems Drift Checks. Select the calibration gas that most closely approximates the concentration of the captured emissions for conducting the drift checks. Introduce the zero and calibration gases at the calibration valve assembly and verify that the appropriate gas flow rate and pressure are present at the FIA. Record the measurement system responses to the zero and calibration gases. The performance of the system is acceptable if the difference between the drift check measurement and the value obtained in section 7.1 is less than 3 percent of the span value. Alternatively, recalibrate the FIA as in section 7.1 and report the results using both sets of calibration data (*i.e.*, data determined prior to the test period and data determined following the test period). The data that results in the lowest CE value shall be reported as the results for the test run. Conduct a system drift check at the end of each run.

7.3 System Check. Inject the high-range calibration gas at the inlet of the sampling probe and record the response. The performance of the system is acceptable if the measurement system response is within 5 percent of the value obtained in section 7.1 for the

high-range calibration gas. Conduct a system check before each test run.

8. Procedure

8.1 Preliminary Determinations. The following points are considered exhaust points and should be measured for volumetric flow rates and VOC concentrations:

8.1.1 Forced Draft Openings. Any opening in the facility with an exhaust fan. Determine the volumetric flow rate according to Method 2.

8.1.2 Roof Openings. Any openings in the roof of a facility which does not contain fans are considered to be exhaust points. Determine volumetric flow rate from these openings. Use the appropriate velocity measurement devices (e.g., propeller anemometers).

8.2 Determination of Flow Rates.

8.2.1 Measure the volumetric flow rate at all locations identified as exhaust points in section 8.1. Divide each exhaust opening into nine equal areas for rectangular openings and into eight equal areas for circular openings.

8.2.2 Measure the velocity at each site at least once every hour during each sampling run using Method 2 or 2A, if applicable, or using the low velocity instruments in section 4.2.2.

8.3 Determination of VOC Content of Uncaptured Emissions.

8.3.1 Analysis Duration. Measure the VOC responses at each uncaptured emissions point during the entire test run or, if applicable, while the process is operating. If there are multiple emissions locations, design a sampling system to allow a single FIA to be used to determine the VOC responses at all sampling locations.

8.3.2 Gas VOC Concentration.

8.3.2.1 Assemble the sample train as shown in Figure 204E–1. Calibrate the FIA and conduct a system check according to the procedures in sections 7.1 and 7.3, respectively.

8.3.2.2 Install the sample probe so that the probe is centrally located in the stack, pipe, or duct, and is sealed tightly at the stack port connection.

8.3.2.3 Inject zero gas at the calibration valve assembly. Allow the measurement system response to reach zero. Measure the system response time as the time required for the system to reach the effluent concentration after the calibration valve has been returned to the effluent sampling position.

8.3.2.4 Conduct a system check before, and a system drift check after, each sampling run according to the procedures in sections 7.2 and 7.3. If the drift check following a run indicates unacceptable performance (see section 7.3), the run is not valid. Alternatively, recalibrate the FIA as in section 7.1 and report the results using both sets of calibration data (*i.e.*, data determined prior to the test period and data determined following the test period). The data that results in the lowest CE value shall be reported as the results for the test run. The tester may elect to perform drift checks during the run, not to exceed one drift check per hour.

8.3.2.5 Verify that the sample lines, filter, and pump temperatures are 120 ±5 °C.

8.3.2.6 Begin sampling at the start of the test period and continue to sample during the entire run. Record the starting and ending times, and any required process information, as appropriate. If multiple emission locations are sampled using a single FIA, sample at each location for the same amount of time (e.g., 2 minutes) and continue to switch from one location to another for the entire test run. Be sure that total sampling time at each location is the same at the end of the test run. Collect at least four separate measurements from each sample point during each hour of testing. Disregard the response measurements at each sampling location until 2 times the response time of the measurement system has elapsed. Continue sampling for at least 1 minute, and record the concentration measurements.

8.4 Alternative Procedure. The direct interface sampling and analysis procedure described in section 7.2 of Method 18 may be used to determine the gas VOC concentration. The system must be designed to collect and analyze at least one sample every 10 minutes. If the alternative procedure is used to determine the VOC concentration of the uncaptured emissions in a gas/gas protocol, it must also be used to determine the VOC concentration of the captured emissions. If a tester wishes to conduct a liquid/gas protocol using a gas chromatograph, the tester must use Method 204F for the liquid steam. A gas chromatograph is not an acceptable alternative to the FIA in Method 204A.

9. Data Analysis and Calculations

9.1 Nomenclature.

C_{DH}=average measured concentration for the drift check calibration gas, ppm propane.

C_{D0}=average system drift check concentration for zero concentration gas, ppm propane.

C_{Fj}=corrected average VOC concentration of uncaptured emissions at point j, ppm propane.

C_H=actual concentration of the drift check calibration gas, ppm propane.

C_j=uncorrected average VOC concentration measured at point j, ppm propane.

F_B=total VOC content of uncaptured emissions from the building, kg.

K_1=1.830×10^{-6} kg/(m^3–ppm).

n=number of measurement points.

Q_{Fj}=average effluent volumetric flow rate corrected to standard conditions at uncaptured emissions point j, m^3/min.

Θ_F=total duration of CE sampling run, min.

9.2 Calculations

9.2.1 Total VOC Uncaptured Emissions from the Building.

$$F_B = \sum_{j=1}^{n} C_{Fj} Q_{Fj} \theta_F K_1 \qquad \text{Eq. 204E-1}$$

9.2.2 VOC Concentration of the Uncaptured Emissions at Point j.

$$C_{Fj} = \left(C_j - C_{DO}\right) \frac{C_H}{C_{DH} - C_{DO}} \qquad \text{Eq. 204E-2}$$

10. Method Performance

The measurement uncertainties are estimated for each uncaptured emissions point as follows: Q_{Fj}=±10.0 percent and C_{Fj}=±5.0 percent. Based on these numbers, the probable uncertainty for F_B is estimated at about ±11.2 percent.

11. Diagrams

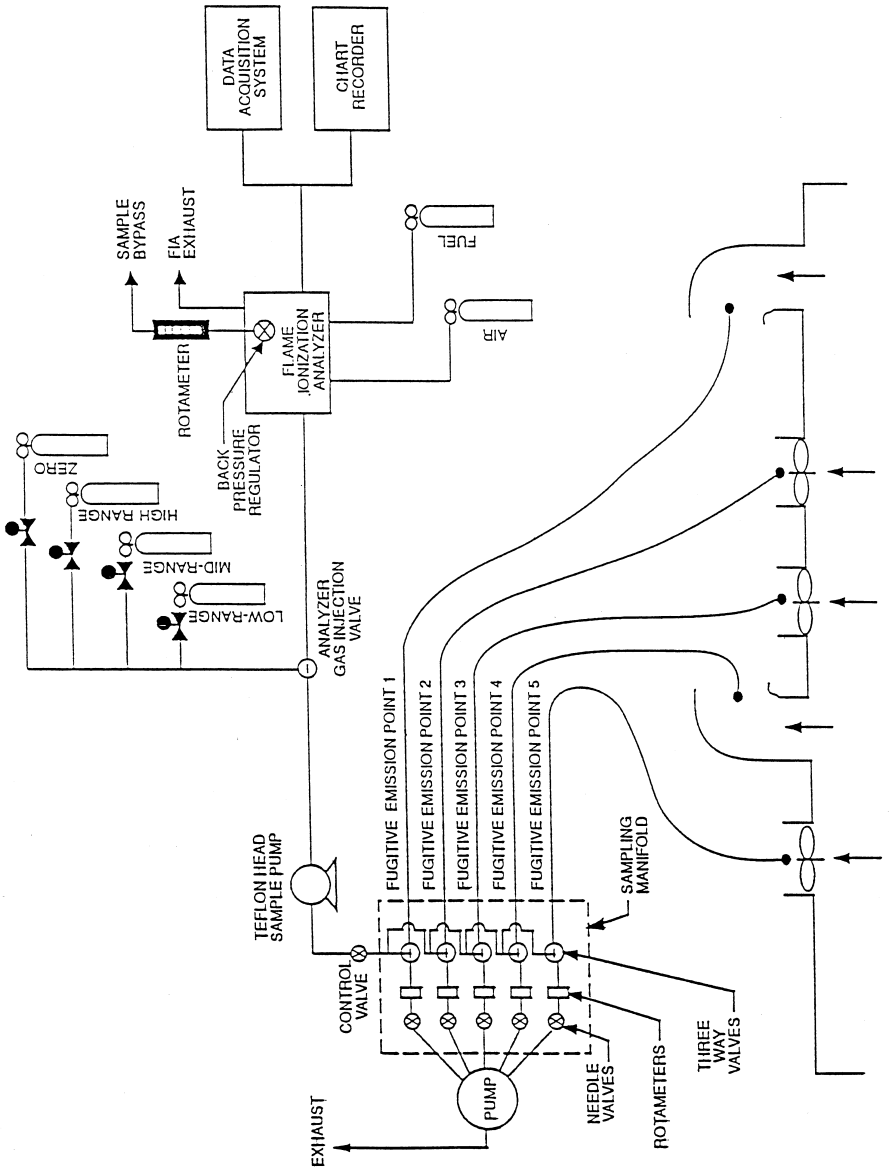

Figure 204E-1. Fugitive emissions measurement system.

METHOD 204F—VOLATILE ORGANIC COMPOUNDS CONTENT IN LIQUID INPUT STREAM (DISTILLATION APPROACH)

1. Introduction

1.1 Applicability. This procedure is applicable for determining the input of volatile organic compounds (VOC). It is intended to be used as a segment in the development of liquid/gas protocols for determining VOC capture efficiency (CE) for surface coating and printing operations.

1.2 Principle. The amount of VOC introduced to the process (L) is the sum of the products of the weight (W) of each VOC containing liquid (ink, paint, solvent, etc.) used,

and its VOC content (V), corrected for a response factor (RF).

1.3 Sampling Requirements. A CE test shall consist of at least three sampling runs. Each run shall cover at least one complete production cycle, but shall be at least 3 hours long. The sampling time for each run need not exceed 8 hours, even if the production cycle has not been completed. Alternative sampling times may be used with the approval of the Administrator.

2. Summary of Method

A sample of each coating used is distilled to separate the VOC fraction. The distillate is used to prepare a known standard for analysis by a flame ionization analyzer (FIA), calibrated against propane, to determine its RF.

3. Safety

Because this procedure is often applied in highly explosive areas, caution and care should be exercised in choosing, installing, and using the appropriate equipment.

4. Equipment and Supplies

Mention of trade names or company products does not constitute endorsement. All gas concentrations (percent, ppm) are by volume, unless otherwise noted.

4.1 Liquid Weight.

4.1.1 Balances/Digital Scales. To weigh drums of VOC containing liquids to within 0.2 lb or 1.0 percent of the total weight of VOC liquid used.

4.1.2 Volume Measurement Apparatus (Alternative). Volume meters, flow meters, density measurement equipment, etc., as needed to achieve the same accuracy as direct weight measurements.

4.2 Response Factor Determination (FIA Technique). The VOC distillation system and Tedlar gas bag generation system apparatuses are shown in Figures 204F–1 and 204F–2, respectively. The following equipment is required:

4.2.1 Sample Collection Can. An appropriately-sized metal can to be used to collect VOC containing materials. The can must be constructed in such a way that it can be grounded to the coating container.

4.2.2 Needle Valves. To control gas flow.

4.2.3 Regulators. For calibration, dilution, and sweep gas cylinders.

4.2.4 Tubing and Fittings. Teflon and stainless steel tubing and fittings with diameters, lengths, and sizes determined by the connection requirements of the equipment.

4.2.5 Thermometer. Capable of measuring the temperature of the hot water and oil baths to within 1 °C.

4.2.6 Analytical Balance. To measure ±0.01 mg.

4.2.7 Microliter Syringe. 10–µl size.

4.2.8 Vacuum Gauge or Manometer. 0– to 760–mm (0– to 30–in.) Hg U-Tube manometer or vacuum gauge.

4.2.9 Hot Oil Bath, With Stirring Hot Plate. Capable of heating and maintaining a distillation vessel at 110 ±3 °C.

4.2.10 Ice Water Bath. To cool the distillation flask.

4.2.11 Vacuum/Water Aspirator. A device capable of drawing a vacuum to within 20 mm Hg from absolute.

4.2.12 Rotary Evaporator System. Complete with folded inner coil, vertical style condenser, rotary speed control, and Teflon sweep gas delivery tube with valved inlet. Buchi Rotavapor or equivalent.

4.2.13 Ethylene Glycol Cooling/Circulating Bath. Capable of maintaining the condenser coil fluid at −10 °C.

4.2.14 Dry Gas Meter (DGM). Capable of measuring the dilution gas volume within 2 percent, calibrated with a spirometer or bubble meter, and equipped with a temperature gauge capable of measuring temperature within 3 °C.

4.2.15 Activated Charcoal/Mole Sieve Trap. To remove any trace level of organics picked up from the DGM.

4.2.16 Gas Coil Heater. Sufficient length of 0.125-inch stainless steel tubing to allow heating of the dilution gas to near the water bath temperature before entering the volatilization vessel.

4.2.17 Water Bath, With Stirring Hot Plate. Capable of heating and maintaining a volatilization vessel and coil heater at a temperature of 100 ±5 °C.

4.2.18 Volatilization Vessel. 50–ml midget impinger fitted with a septum top and loosely filled with glass wool to increase the volatilization surface.

4.2.19 Tedlar Gas Bag. Capable of holding 30 liters of gas, flushed clean with zero air, leak tested, and evacuated.

4.2.20 Organic Concentration Analyzer. An FIA with a span value of 1.5 times the expected concentration as propane; however, other span values may be used if it can be demonstrated that they would provide equally accurate measurements. The FIA instrument should be the same instrument used in the gaseous analyses adjusted with the same fuel, combustion air, and sample back-pressure (flow rate) settings. The system shall be capable of meeting or exceeding the following specifications:

4.2.20.1 Zero Drift. Less than ±3.0 percent of the span value.

4.2.20.2 Calibration Drift. Less than ±3.0 percent of the span value.

4.2.20.3 Calibration Error. Less than ±3.0 percent of the calibration gas value.

4.2.21 Integrator/Data Acquisition System. An analog or digital device or computerized data acquisition system used to integrate the FIA response or compute the average response and record measurement data.

The minimum data sampling frequency for computing average or integrated value is one measurement value every 5 seconds. The device shall be capable of recording average values at least once per minute.

4.2.22 Chart Recorder (Optional). A chart recorder or similar device is recommended to provide a continuous analog display of the measurement results during the liquid sample analysis.

5. Reagents and Standards

5.1 Zero Air. High purity air with less than 1 ppm of organic material (as propane) or less than 0.1 percent of the span value, whichever is greater. Used to supply dilution air for making the Tedlar bag gas samples.

5.2 THC Free N_2. High purity N_2 with less than 1 ppm THC. Used as sweep gas in the rotary evaporator system.

5.3 Calibration and Other Gases. Gases used for calibration, fuel, and combustion air (if required) are contained in compressed gas cylinders. All calibration gases shall be traceable to National Institute of Standards and Technology standards and shall be certified by the manufacturer to ±1 percent of the tag value. Additionally, the manufacturer of the cylinder should provide a recommended shelf life for each calibration gas cylinder over which the concentration does not change more than ±2 percent from the certified value. For calibration gas values not generally available, dilution systems calibrated using Method 205 may be used. Alternative methods for preparing calibration gas mixtures may be used with the approval of the Administrator.

5.3.1 Fuel. The FIA manufacturer's recommended fuel should be used. A 40 percent H_2/60 percent He, or 40 percent H_2/60 percent N_2 mixture is recommended to avoid fuels with oxygen to avoid an oxygen synergism effect that reportedly occurs when oxygen concentration varies significantly from a mean value. Other mixtures may be used provided the tester can demonstrate to the Administrator that there is no oxygen synergism effect.

5.3.2 Combustion Air. High purity air with less than 1 ppm of organic material (as propane) or less than 0.1 percent of the span value, whichever is greater.

5.3.3 FIA Linearity Calibration Gases. Low-, mid-, and high-range gas mixture standards with nominal propane concentration of 20–30, 45–55, and 70–80 percent of the span value in air, respectively. Other calibration values and other span values may be used if it can be shown that equally accurate measurements would be achieved.

5.3.4 System Calibration Gas. Gas mixture standard containing propane in air, approximating the VOC concentration expected for the Tedlar gas bag samples.

6. Quality Control

6.1 Required instrument quality control parameters are found in the following sections:

6.1.1 The FIA system must be calibrated as specified in section 7.1.

6.1.2 The system drift check must be performed as specified in section 7.2.

6.2 Precision Control. A minimum of one sample in each batch must be distilled and analyzed in duplicate as a precision control. If the results of the two analyses differ by more than ±10 percent of the mean, then the system must be reevaluated and the entire batch must be redistilled and analyzed.

7. Calibration and Standardization

7.1 FIA Calibration and Linearity Check. Make necessary adjustments to the air and fuel supplies for the FIA and ignite the burner. Allow the FIA to warm up for the period recommended by the manufacturer. Inject a calibration gas into the measurement system and adjust the back-pressure regulator to the value required to achieve the flow rates specified by the manufacturer. Inject the zero-and the high-range calibration gases and adjust the analyzer calibration to provide the proper responses. Inject the low-and mid-range gases and record the responses of the measurement system. The calibration and linearity of the system are acceptable if the responses for all four gases are within 5 percent of the respective gas values. If the performance of the system is not acceptable, repair or adjust the system and repeat the linearity check. Conduct a calibration and linearity check after assembling the analysis system and after a major change is made to the system. A calibration curve consisting of zero gas and two calibration levels must be performed at the beginning and end of each batch of samples.

7.2 Systems Drift Checks. After each sample, repeat the system calibration checks in section 7.1 before any adjustments to the FIA or measurement system are made. If the zero or calibration drift exceeds ±3 percent of the span value, discard the result and repeat the analysis. Alternatively, recalibrate the FIA as in section 7.1 and report the results using both sets of calibration data (*i.e.*, data determined prior to the test period and data determined following the test period). The data that results in the lowest CE value shall be reported as the results for the test run.

8. Procedures

8.1 Determination of Liquid Input Weight

8.1.1 Weight Difference. Determine the amount of material introduced to the process as the weight difference of the feed material before and after each sampling run. In determining the total VOC containing liquid

usage, account for: (a) The initial (beginning) VOC containing liquid mixture; (b) any solvent added during the test run; (c) any coating added during the test run; and (d) any residual VOC containing liquid mixture remaining at the end of the sample run.

8.1.1.1 Identify all points where VOC containing liquids are introduced to the process. To obtain an accurate measurement of VOC containing liquids, start with an empty fountain (if applicable). After completing the run, drain the liquid in the fountain back into the liquid drum (if possible), and weigh the drum again. Weigh the VOC containing liquids to ±0.5 percent of the total weight (full) or ±1.0 percent of the total weight of VOC containing liquid used during the sample run, whichever is less. If the residual liquid cannot be returned to the drum, drain the fountain into a preweighed empty drum to determine the final weight of the liquid.

8.1.1.2 If it is not possible to measure a single representative mixture, then weigh the various components separately (e.g., if solvent is added during the sampling run, weigh the solvent before it is added to the mixture). If a fresh drum of VOC containing liquid is needed during the run, then weigh both the empty drum and fresh drum.

8.1.2 Volume Measurement (Alternative). If direct weight measurements are not feasible, the tester may use volume meters and flow rate meters (and density measurements) to determine the weight of liquids used if it can be demonstrated that the technique produces results equivalent to the direct weight measurements. If a single representative mixture cannot be measured, measure the components separately.

8.2 Determination of VOC Content in Input Liquids

8.2.1 Collection of Liquid Samples.

8.2.1.1 Collect a 1-pint or larger sample of the VOC containing liquid mixture at each application location at the beginning and end of each test run. A separate sample should be taken of each VOC containing liquid added to the application mixture during the test run. If a fresh drum is needed during the sampling run, then obtain a sample from the fresh drum.

8.2.1.2 When collecting the sample, ground the sample container to the coating drum. Fill the sample container as close to the rim as possible to minimize the amount of headspace.

8.2.1.3 After the sample is collected, seal the container so the sample cannot leak out or evaporate.

8.2.1.4 Label the container to identify clearly the contents.

8.2.2 Distillation of VOC.

8.2.2.1 Assemble the rotary evaporator as shown in Figure 204F–1.

8.2.2.2 Leak check the rotary evaporation system by aspirating a vacuum of approximately 20 mm Hg from absolute. Close up the system and monitor the vacuum for approximately 1 minute. If the vacuum falls more than 25 mm Hg in 1 minute, repair leaks and repeat. Turn off the aspirator and vent vacuum.

8.2.2.3 Deposit approximately 20 ml of sample (inks, paints, etc.) into the rotary evaporation distillation flask.

8.2.2.4 Install the distillation flask on the rotary evaporator.

8.2.2.5 Immerse the distillate collection flask into the ice water bath.

8.2.2.6 Start rotating the distillation flask at a speed of approximately 30 rpm.

8.2.2.7 Begin heating the vessel at a rate of 2 to 3 °C per minute.

8.2.2.8 After the hot oil bath has reached a temperature of 50 °C or pressure is evident on the mercury manometer, turn on the aspirator and gradually apply a vacuum to the evaporator to within 20 mm Hg of absolute. Care should be taken to prevent material burping from the distillation flask.

8.2.2.9 Continue heating until a temperature of 110 °C is achieved and maintain this temperature for at least 2 minutes, or until the sample has dried in the distillation flask.

8.2.2.10 Slowly introduce the N_2 sweep gas through the purge tube and into the distillation flask, taking care to maintain a vacuum of approximately 400-mm Hg from absolute.

8.2.2.11 Continue sweeping the remaining solvent VOC from the distillation flask and condenser assembly for 2 minutes, or until all traces of condensed solvent are gone from the vessel. Some distillate may remain in the still head. This will not affect solvent recovery ratios.

8.2.2.12 Release the vacuum, disassemble the apparatus and transfer the distillate to a labeled, sealed vial.

8.2.3 Preparation of VOC standard bag sample.

8.2.3.1 Assemble the bag sample generation system as shown in Figure 204F–2 and bring the water bath up to near boiling temperature.

8.2.3.2 Inflate the Tedlar bag and perform a leak check on the bag.

8.2.3.3 Evacuate the bag and close the bag inlet valve.

8.2.3.4 Record the current barometric pressure.

8.2.3.5 Record the starting reading on the dry gas meter, open the bag inlet valve, and start the dilution zero air flowing into the Tedlar bag at approximately 2 liters per minute.

8.2.3.6 The bag sample VOC concentration should be similar to the gaseous VOC concentration measured in the gas streams. The amount of liquid VOC required can be approximated using equations in section 9.2. Using Equation 204F–4, calculate C_{VOC} by assuming RF is 1.0 and selecting the desired gas concentration in terms of propane, C_{C3}.

Assuming B_V is 20 liters, M_L, the approximate amount of liquid to be used to prepare the bag gas sample, can be calculated using Equation 204F–2.

8.2.3.7 Quickly withdraw an aliquot of the approximate amount calculated in section 8.2.3.6 from the distillate vial with the microliter syringe and record its weight from the analytical balance to the nearest 0.01 mg.

8.2.3.8 Inject the contents of the syringe through the septum of the volatilization vessel into the glass wool inside the vessel.

8.2.3.9 Reweigh and record the tare weight of the now empty syringe.

8.2.3.10 Record the pressure and temperature of the dilution gas as it is passed through the dry gas meter.

8.2.3.11 After approximately 20 liters of dilution gas have passed into the Tedlar bag, close the valve to the dilution air source and record the exact final reading on the dry gas meter.

8.2.3.12 The gas bag is then analyzed by FIA within 1 hour of bag preparation in accordance with the procedure in section 8.2.4.

8.2.4 Determination of VOC response factor.

8.2.4.1 Start up the FIA instrument using the same settings as used for the gaseous VOC measurements.

8.2.4.2 Perform the FIA analyzer calibration and linearity checks according to the procedure in section 7.1. Record the responses to each of the calibration gases and the back-pressure setting of the FIA.

8.2.4.3 Connect the Tedlar bag sample to the FIA sample inlet and record the bag concentration in terms of propane. Continue the analyses until a steady reading is obtained for at least 30 seconds. Record the final reading and calculate the RF.

8.2.5 Determination of coating VOC content as VOC (V_{IJ}).

8.2.5.1 Determine the VOC content of the coatings used in the process using EPA Method 24 or 24A as applicable.

9. Data Analysis and Calculations

9.1. Nomenclature.

B_V=Volume of bag sample volume, liters.

C_{C3}=Concentration of bag sample as propane, mg/liter.

C_{VOC}=Concentration of bag sample as VOC, mg/liter.

K=0.00183 mg propane/(liter-ppm propane)

L=Total VOC content of liquid input, kg propane.

M_L=Mass of VOC liquid injected into the bag, mg.

M_V=Volume of gas measured by DGM, liters.

P_M=Absolute DGM gas pressure, mm Hg.

P_{STD}=Standard absolute pressure, 760 mm Hg.

R_{C3}=FIA reading for bag gas sample, ppm propane.

RF=Response factor for VOC in liquid, weight VOC/weight propane.

RF_J=Response factor for VOC in liquid J, weight VOC/weight propane.

T_M=DGM temperature, °K.

T_{STD}=Standard absolute temperature, 293 °K.

V_{IJ}=Initial VOC weight fraction of VOC liquid J.

V_{FJ}=Final VOC weight fraction of VOC liquid J.

V_{AJ}=VOC weight fraction of VOC liquid J added during the run.

W_{IJ}=Weight of VOC containing liquid J at beginning of run, kg.

W_{FJ}=Weight of VOC containing liquid J at end of run, kg.

W_{AJ}=Weight of VOC containing liquid J added during the run, kg.

9.2 Calculations.

9.2.1 Bag sample volume.

$$B_V = \frac{M_V T_{STD} P_M}{T_M P_{STD}} \qquad \text{Eq. 204F-1}$$

9.2.2 Bag sample VOC concentration.

$$C_{VOC} = \frac{M_L}{B_V} \qquad \text{Eq. 204F-2}$$

9.2.3 Bag sample VOC concentration as propane.

$$C_{C_3} = R_{C_3} K \qquad \text{Eq. 204F-3}$$

9.2.4 Response Factor.

$$RF = \frac{C_{VOC}}{C_{C_3}} \qquad \text{Eq. 204F-4}$$

9.2.5 Total VOC Content of the Input VOC Containing Liquid.

$$L = \sum_{j=1}^{n} \frac{V_{rj} W_{rj}}{RF_J} - \sum_{j=1}^{n} \frac{V_{Fj} W_{Fj}}{RF_J} + \sum_{j=1}^{n} \frac{V_{Aj} W_{Aj}}{RF_J} \qquad \text{Eq. 204F-5}$$

10. Diagrams

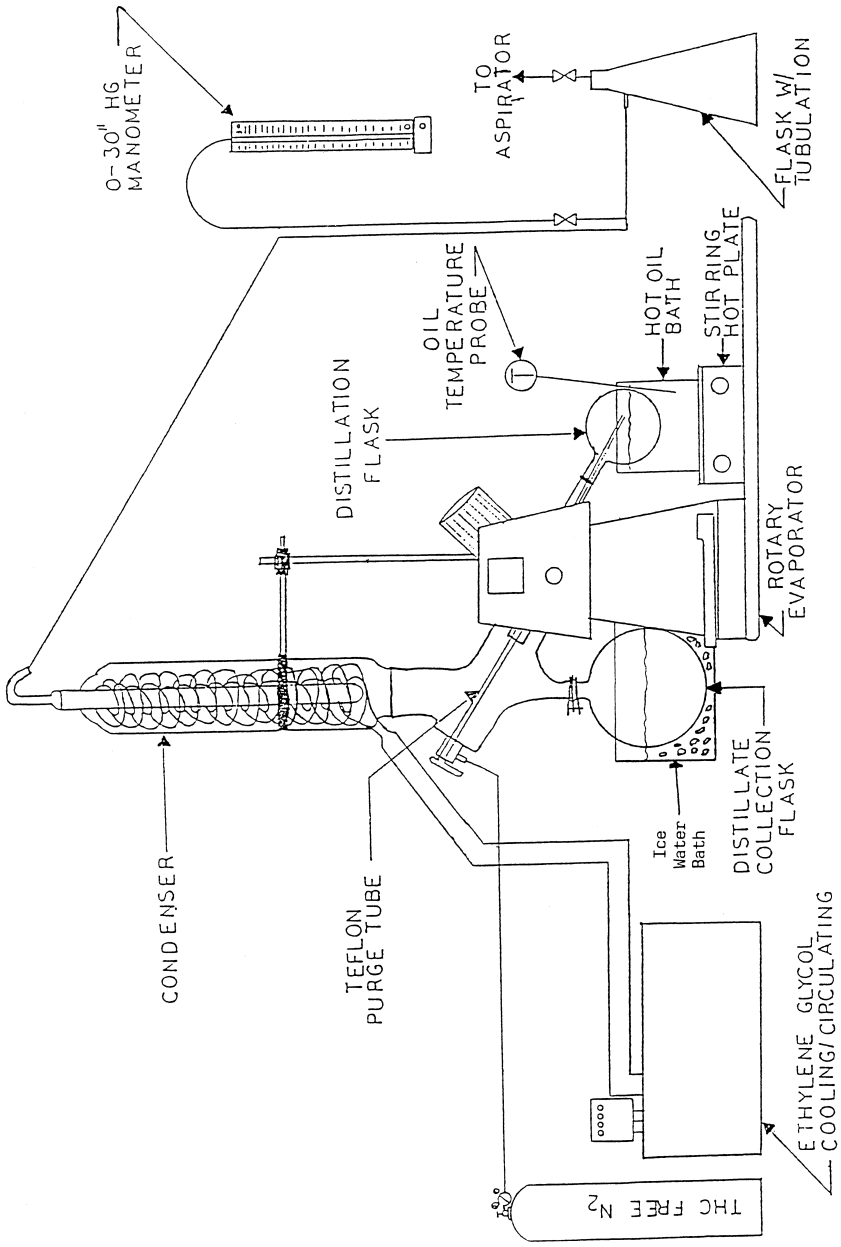

Figure 204F-1. VOC distillation system apparatus.

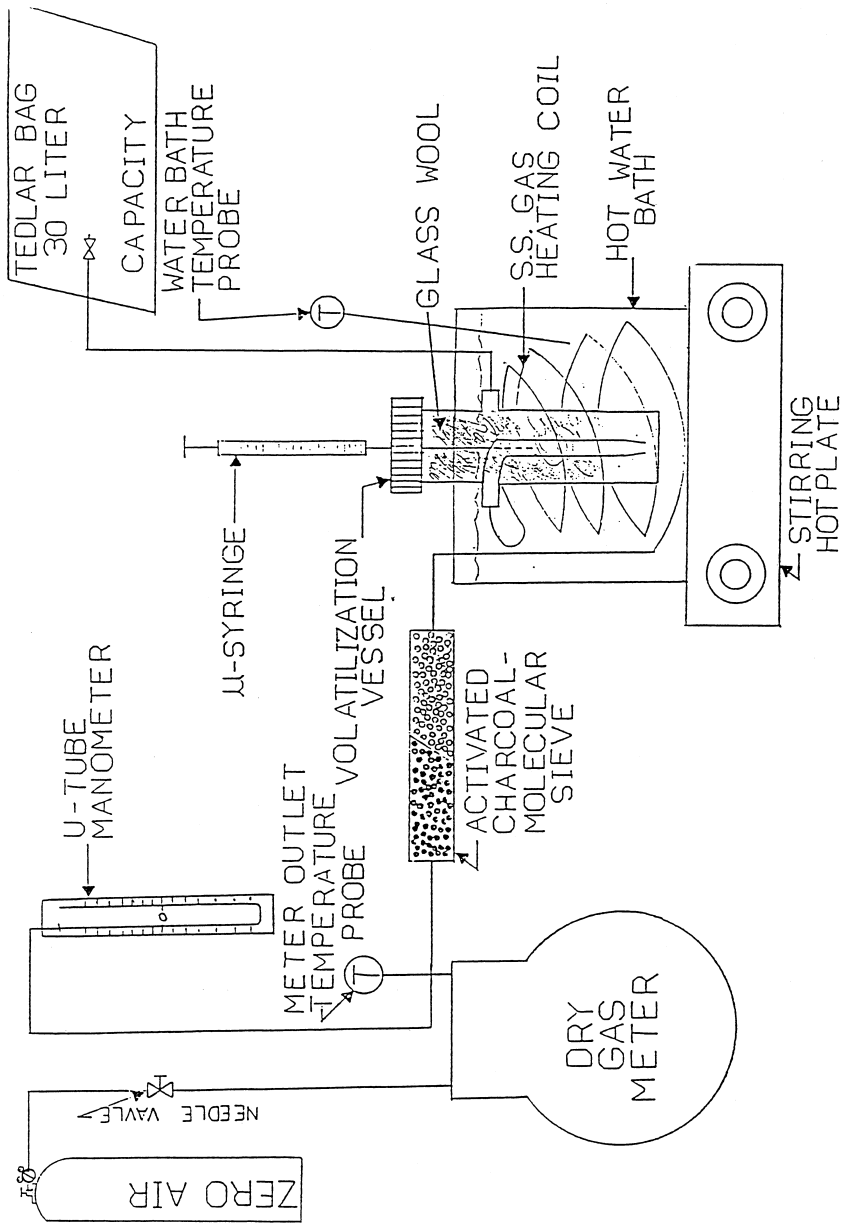

Figure 204F-2. Tedlar gas bag generation system apparatus.

METHOD 205—VERIFICATION OF GAS DILUTION SYSTEMS FOR FIELD INSTRUMENT CALIBRATIONS

1. Introduction

1.1 Applicability. A gas dilution system can provide known values of calibration gases through controlled dilution of high-level calibration gases with an appropriate dilution gas. The instrumental test methods in 40 CFR part 60—e.g., Methods 3A, 6C, 7E, 10, 15, 16, 20, 25A and 25B—require on-site, multi-point calibration using gases of known concentrations. A gas dilution system that produces known low-level calibration gases from high-level calibration gases, with a degree of confidence similar to that for Protocol[1] gases, may be used for compliance tests in lieu of multiple calibration gases when the gas dilution system is demonstrated to meet the requirements of this method. The Administrator may also use a gas dilution system in order to produce a wide range of Cylinder Gas Audit concentrations when conducting performance specifications according to appendix F, 40 CFR part 60. As long as the acceptance criteria of this method are met, this method is applicable to gas dilution systems using any type of dilution technology, not solely the ones mentioned in this method.

1.2 Principle. The gas dilution system shall be evaluated on one analyzer once during each field test. A precalibrated analyzer is chosen, at the discretion of the source owner or operator, to demonstrate that the gas dilution system produces predictable gas concentrations spanning a range of concentrations. After meeting the requirements of this method, the remaining analyzers may be calibrated with the dilution system in accordance to the requirements of the applicable method for the duration of the field test. In Methods 15 and 16, 40 CFR part 60, appendix A, reactive compounds may be lost in the gas dilution system. Also, in Methods 25A and 25B, 40 CFR part 60, appendix A, calibration with target compounds other than propane is allowed. In these cases, a laboratory evaluation is required once per year in order to assure the Administrator that the system will dilute these reactive gases without significant loss.

NOTE: The laboratory evaluation is required only if the source owner or operator plans to utilize the dilution system to prepare gases mentioned above as being reactive.

2. Specifications

2.1 Gas Dilution System. The gas dilution system shall produce calibration gases whose measured values are within ±2 percent of the predicted values. The predicted values are calculated based on the certified concentration of the supply gas (Protocol gases, when available, are recommended for their accuracy) and the gas flow rates (or dilution ratios) through the gas dilution system.

2.1.1 The gas dilution system shall be recalibrated once per calendar year using NIST-traceable primary flow standards with an uncertainty ≤0.25 percent. A label shall be affixed at all times to the gas dilution system listing the date of the most recent calibration, the due date for the next calibration, and the person or manufacturer who carried out the calibration. Follow the manufacturer's instructions for the operation and use of the gas dilution system. A copy of the manufacturer's instructions for the operation of the instrument, as well as the most recent recalibration documentation shall be made available for the Administrator's inspection upon request.

2.1.2 Some manufacturers of mass flow controllers recommend that flow rates below 10 percent of flow controller capacity be avoided; check for this recommendation and follow the manufacturer's instructions. One study has indicated that silicone oil from a positive displacement pump produces an interference in SO_2 analyzers utilizing ultraviolet fluorescence; follow laboratory procedures similar to those outlined in Section 3.1 in order to demonstrate the significance of any resulting effect on instrument performance.

2.2 High-Level Supply Gas. An EPA Protocol calibration gas is recommended, due to its accuracy, as the high-level supply gas.

2.3 Mid-Level Supply Gas. An EPA Protocol gas shall be used as an independent check of the dilution system. The concentration of the mid-level supply gas shall be within 10 percent of one of the dilution levels tested in Section 3.2.

3. Performance Tests

3.1 Laboratory Evaluation (Optional). If the gas dilution system is to be used to formulate calibration gases with reactive compounds (Test Methods 15, 16, and 25A/25B (only if using a calibration gas other than propane during the field test) in 40 CFR part 60, appendix A), a laboratory certification must be conducted once per calendar year for each reactive compound to be diluted. In the laboratory, carry out the procedures in Section 3.2 on the analyzer required in each respective test method to be laboratory certified (15, 16, or 25A and 25B for compounds other than propane). For each compound in which the gas dilution system meets the requirements in Section 3.2, the source must provide the laboratory certification data for the field test and in the test report.

3.2 Field Evaluation (Required). The gas dilution system shall be evaluated at the test site with an analyzer or monitor chosen by the source owner or operator. It is recommended that the source owner or operator choose a precalibrated instrument with a

high level of precision and accuracy for the purposes of this test. This method is not meant to replace the calibration requirements of test methods. In addition to the requirements in this method, all the calibration requirements of the applicable test method must also be met.

3.2.1 Prepare the gas dilution system according to the manufacturer's instructions. Using the high-level supply gas, prepare, at a minimum, two dilutions within the range of each dilution device utilized in the dilution system (unless, as in critical orifice systems, each dilution device is used to make only one dilution; in that case, prepare one dilution for each dilution device). Dilution device in this method refers to each mass flow controller, critical orifice, capillary tube, positive displacement pump, or any other device which is used to achieve gas dilution.

3.2.2 Calculate the predicted concentration for each of the dilutions based on the flow rates through the gas dilution system (or the dilution ratios) and the certified concentration of the high-level supply gas.

3.2.3 Introduce each of the dilutions from Section 3.2.1 into the analyzer or monitor one at a time and determine the instrument response for each of the dilutions.

3.2.4 Repeat the procedure in Section 3.2.3 two times, i.e., until three injections are made at each dilution level. Calculate the average instrument response for each triplicate injection at each dilution level. No single injection shall differ by more than ±2 percent from the average instrument response for that dilution.

3.2.5 For each level of dilution, calculate the difference between the average concentration output recorded by the analyzer and the predicted concentration calculated in Section 3.2.2. The average concentration output from the analyzer shall be within ±2 percent of the predicted value.

3.2.6 Introduce the mid-level supply gas directly into the analyzer, bypassing the gas dilution system. Repeat the procedure twice more, for a total of three mid-level supply gas injections. Calculate the average analyzer output concentration for the mid-level supply gas. The difference between the certified concentration of the mid-level supply gas and the average instrument response shall be within ±2 percent.

3.3 If the gas dilution system meets the criteria listed in Section 3.2, the gas dilution system may be used throughout that field test. If the gas dilution system fails any of the criteria listed in Section 3.2, and the tester corrects the problem with the gas dilution system, the procedure in Section 3.2 must be repeated in its entirety and all the criteria in Section 3.2 must be met in order for the gas dilution system to be utilized in the test.

4. References

1. ''EPA Traceability Protocol for Assay and Certification of Gaseous Calibration Standards,'' EPA–600/R93/224, Revised September 1993.

METHOD 207—PRE-SURVEY PROCEDURE FOR CORN WET-MILLING FACILITY EMISSION SOURCES

1.0 Scope and Application

1.1 *Analyte*. Total gaseous organic compounds.

1.2 *Applicability*. This pre-survey method is intended for use at corn wet-milling (CWM) facilities to satisfy the requirements of Method 18, Section 16 (Pre-survey). This procedure establishes the analytes for subsequent Method 18 testing to determine the total mass emissions of VOCs from sources at CWM facilities. The specific objectives of the pre-survey procedure are:

1.2.1 Identify the physical characteristics of the VOC contained in the effluent.

1.2.2 Determine the appropriate Method 18 sampling approach to ensure efficient collection of all VOC present in the effluent.

1.2.3 Develop a specific list of target compounds to be quantified during the subsequent total VOC test program.

1.2.4 Qualify the list of target compounds as being a true representation of the total VOC.

1.3 *Range*. The lower and upper ranges of this procedure are determined by the sensitivity of the flame ionization detector (FID) instruments used. Typically, gas detection limits for the VOCs will be on the order of 1–5 ppmv, with the upper limit on the order of 100,000 ppmv.

2.0 Summary of Method

NOTE: Method 6, Method 18, and Method 25A as cited in this method refer to the methods in 40 CFR Part 60, Appendix A.

This procedure calls for using an FIA in conjunction with various configurations of impingers, and other absorbents, or adsorbents to determine the best EPA Method 18 sampling train configuration for the assessment and capture of VOCs. VOC compounds present in the exhaust gas from processes located at CWM facilities fall into five general categories: Alcohols, aldehydes, acetate esters, ketones, and carboxylic acids, and typically contain fewer than six carbon atoms. This pre-survey protocol characterizes and identifies the VOC species present. Since it is qualitative in nature, quantitative performance criteria do not apply.

3.0 Definitions

3.1 Calibration drift means the difference in the measurement system response to a mid-level calibration gas before and after a stated period of operation during which no

unscheduled maintenance, repair, or adjustment took place.

3.2 Calibration error means the difference between the gas concentration indicated by the measurement system and the known concentration of the calibration gas.

3.3 Calibration gas means a known concentration of a gas in an appropriate diluent gas.

3.4 Measurement system means the equipment required for the determination of the gas concentration. The system consists of the following major subsystems:

3.4.1 Sample interface means that portion of a system used for one or more of the following: Sample acquisition, sample transportation, sample conditioning, or protection of the analyzer(s) from the effects of the stack effluent.

3.4.2 Organic analyzer means that portion of the measurement system that senses the gas to be measured and generates an output proportional to its concentration.

3.5 Response time means the time interval from a step change in pollutant concentration at the inlet to the emission measurement system to the time at which 95 percent of the corresponding final value is reached as displayed on the recorder.

3.6 Span Value means the upper limit of a gas concentration measurement range that is specified for affected source categories in the applicable part of the regulations. The span value is established in the applicable regulation and is usually 1.5 to 2.5 times the applicable emission limit. If no span value is provided, use a span value equivalent to 1.5 to 2.5 times the expected concentration. For convenience, the span value should correspond to 100 percent of the recorder scale.

3.7 Zero drift means the difference in the measurement system response to a zero level calibration gas before or after a stated period of operation during which no unscheduled maintenance, repair, or adjustment took place.

4.0 Interferences [Reserved]

5.0 Safety [Reserved]

6.0 Equipment and Supplies

6.1 *Organic Concentration Analyzer*. A flame ionization analyzer (FIA) with heated detector block and sample handling system, meeting the requirements of USEPA Method 25A.

6.2 *Heated Sampling System*. A sampling system consisting of a stainless steel probe with particulate filter, Teflon® sample line, and sampling pump capable of moving 1.0 l/min through the sample probe and line. The entire system from probe tip to FIA analyzer must have the capability to maintain all sample-wetted parts at a temperature >120 °C. A schematic of the heated sampling system and impinger train is shown in Figure 1 of this method.

6.3 *Impinger Train*. EPA Method 6 type, comprised of three midget impingers with appropriate connections to the sampling system and FIA system. The impinger train may be chilled in an ice bath or maintained at a set temperature in a water bath as indicated by the operator's knowledge of the source and the compounds likely to be present. Additional impingers or larger impingers may be used for high moisture sources.

6.4 *Adsorbent tubes*.

6.4.1 Silica gel, SKC Type 226–22 or equivalent, with appropriate end connectors and holders.

6.4.2 Activated carbon, SKC Type 226–84 or equivalent, with appropriate end connectors and holders.

6.5 *Tedlar bag*. 24 liter, w/ Roberts valve, for GC/MS analysis of ''breakthrough'' VOC fraction as needed.

7.0 Reagents and Standards

7.1 Organic-free water, HPLC, or pharmaceutical grade.

7.2 *Calibration Gases*. The calibration gases for the gas analyzer shall be propane in air or propane in nitrogen. If organic compounds other than propane are used, the appropriate corrections for response factor must be available and applied to the results. Calibration gases shall be prepared in accordance with the procedure listed in Citation 2 of section 16. Additionally, the manufacturer of the cylinder must provide a recommended shelf life for each calibration gas cylinder over which the concentration does not change more than ±2 percent from the certified value. For calibration gas values not generally available (*i.e.*, organics between 1 and 10 percent by volume), alternative methods for preparing calibration gas mixtures, such as dilution systems (Test Method 205, 40 CFR Part 51, Appendix M), may be used with prior approval of the Administrator.

7.3 *Fuel*. A 40 percent H2/60 percent N2 or He gas mixture is recommended to avoid an oxygen synergism effect that reportedly occurs when oxygen concentration varies significantly from a mean value.

7.4 *Zero Gas*. High purity air with less than 0.1 parts per million by volume (ppmv) of organic material (propane or carbon equivalent) or less than 0.1 percent of the span value, whichever is greater.

7.5 *Low-level Calibration Gas*. An organic calibration gas with a concentration equivalent to 25 to 35 percent of the applicable span value.

7.6 *Mid-level Calibration Gas*. An organic calibration gas with a concentration equivalent to 45 to 55 percent of the applicable span value.

7.7 *High-level Calibration Gas*. An organic calibration gas with a concentration equivalent to 80 to 90 percent of the applicable span value.

8.0 Sample Collection, Preservation and Storage

8.1 *Configuration*. The configuration of the pre-survey sampling system is provided in Figure 1. This figure shows the primary components of the sampling system needed to conduct a VOC survey. A dual-channel analyzer is beneficial, but not necessary. Only a single channel is indicated in the figure.

8.2 *Sampling*. The pre-survey system should be set up and calibrated with the targeted sampling flow rate that will be used during Method 18 VOC sampling. The targeted flow rate for capture of most expected VOC species is 400 cc/min. Since most FIA analyzers do not specifically allow for adjusting the total sample flow rate (only the back pressure), it may be necessary to insert a flow control valve at the sample inlet to the FIA. The total sample flow can be measured at the FIA bypass, since only a small fraction of the sample flow is diverted to analysis portion of the instrument.

The sampling system configuration shown in Figure 1 is operated using the process flow diagram provided in Figure 2. As noted in the process flowchart, the initial sampling media consists of the three midget impingers. The attenuation of the VOC sample stream is evaluated to determine if 95 percent or greater attenuation (capture) of the VOCs present has been achieved. The flow diagram specifies successive adjustments to the sampling media that are utilized to increase VOC capture.

A one-hour test of the final sampling configuration is performed using fresh media to ensure that significant breakthrough does not occur. Additional sampling media (more water, silica or carbon tubes) may be added to ensure that breakthrough is not occurring for the full duration of a test run.

If 95 percent or greater attenuation has not been achieved after inserting all indicated media, the most likely scenario is that methane is present. This is easily checked by collecting a sample of this final bypass sample stream and analyzing for methane. There are other VOC compounds which could also penetrate the media. Their identification by gas chromatography followed by mass spectrometry would be required if the breakthrough cannot be accounted for by the presence of methane.

9.0 Quality Control

9.1 *Blanks*. A minimum of one method blank shall be prepared and analyzed for each sample medium employed during a pre-survey testing field deployment to assess the effect of media contamination. Method blanks are prepared by assembling and charging the sample train with reagents, then recovering and preserving the blanks in the same manner as the test samples. Method blanks and test samples are stored, transported and analyzed in identical fashion as the test samples.

9.2 *Synthetic Sample (optional)*. A synthetic sample may be used to assess the performance of the VOC characterization apparatus with respect to specific compounds. The synthetic sample is prepared by injecting appropriate volume(s) of the compounds of interest into a Tedlar bag containing a known volume of zero air or nitrogen. The contents of the bag are allowed to equilibrate, and the bag is connected to the sampling system. The sampling system, VOC characterization apparatus and FIA are operated normally to determine the performance of the system with respect to the VOC compounds present in the synthetic sample.

10.0 Calibration and Standardization

10.1 *Calibration*. The FIA equipment is able to be calibrated for almost any range of total organic concentrations. For high concentrations of organics (>1.0 percent by volume as propane), modifications to most commonly available analyzers are necessary. One accepted method of equipment modification is to decrease the size of the sample to the analyzer through the use of a smaller diameter sample capillary. Direct and continuous measurement of organic concentration is a necessary consideration when determining any modification design.

11.0 Procedure

11.1 *Analytical Procedure*. Upon completion of the pre-survey sampling, the sample fractions are to be analyzed by an appropriate chromatographic technique. (Ref: Method 18) The resulting chromatograms must be reviewed to ensure that the ratio of known peak area to total peak area is 95% or greater. It should be noted that if formaldehyde is a suspected analyte, it must be quantitated separately using a different analytical technique.

12.0 Data Analysis and Calculations

Chromatogram peaks will be ranked from greatest area to least area using peak integrator output. The area of all peaks will then be totaled, and the proportion of each peak area to the total area will be calculated. Beginning with the highest ranked area, each peak will be identified and the area added to previous areas until the cumulative area comprises at least 95% of the total area. The VOC compounds generating those identified peaks will comprise the compound list to be used in Method 18 testing of the subject source.

13.0 Method Performance [Reserved]

14.0 Pollution Prevention [Reserved]

15.0 Waste Management [Reserved]

16.0 References

16.1 CFR 40 Part 60, Appendix A, Method 18, Measurement of Gaseous Organic Compound Emissions by Gas Chromatography.

16.2 CFR 40 Part 60, Appendix A, Method 25A, Determination of Total Gaseous Organic Concentration Using a Flame Ionization Analyzer.

16.2 CFR 40 Part 60, Appendix A, Method 6, Determination of Sulfur Dioxide Emissions from Stationary Sources.

16.3 National Council for Air and Stream Improvement (NCASI), Method CI/WP–98.01 ''Chilled Impinger Method for Use at Wood Products Mills to Measure Formaldehyde, Methanol, and Phenol.

17. Tables, Diagrams, Flowcharts, and Validation Data

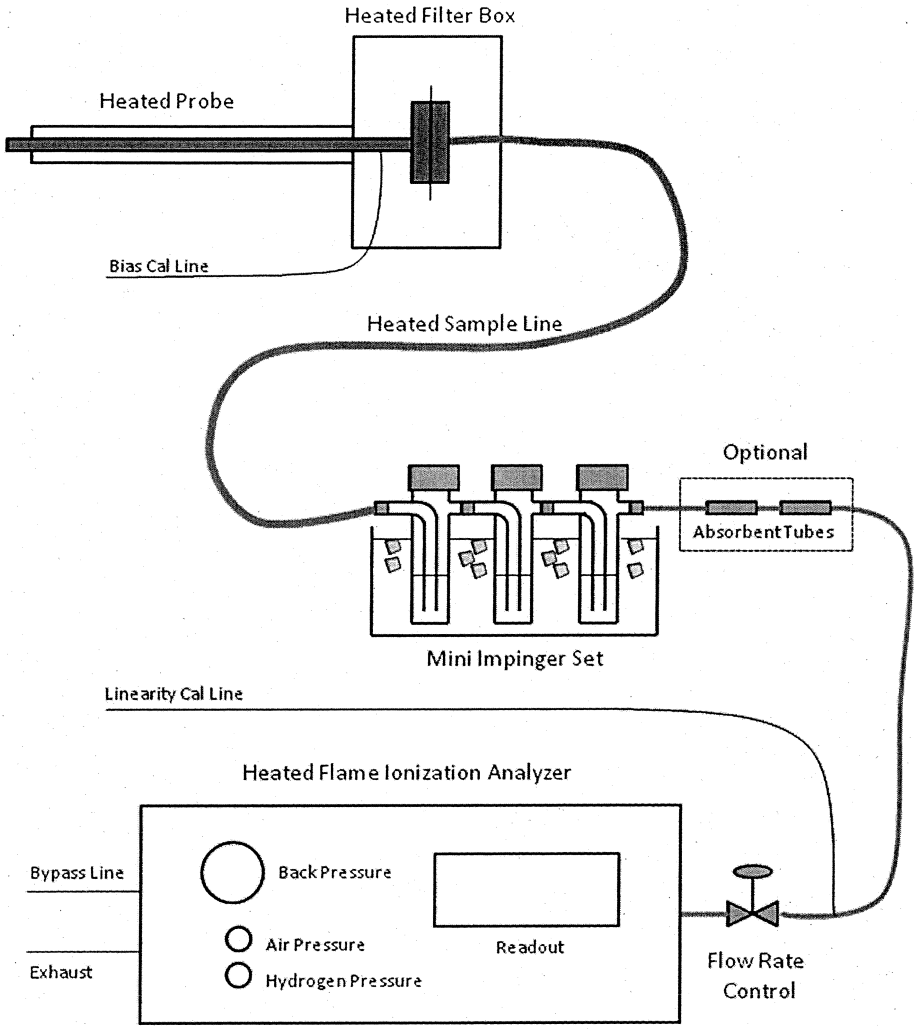

Figure 1. Pre-Survey Sampling System

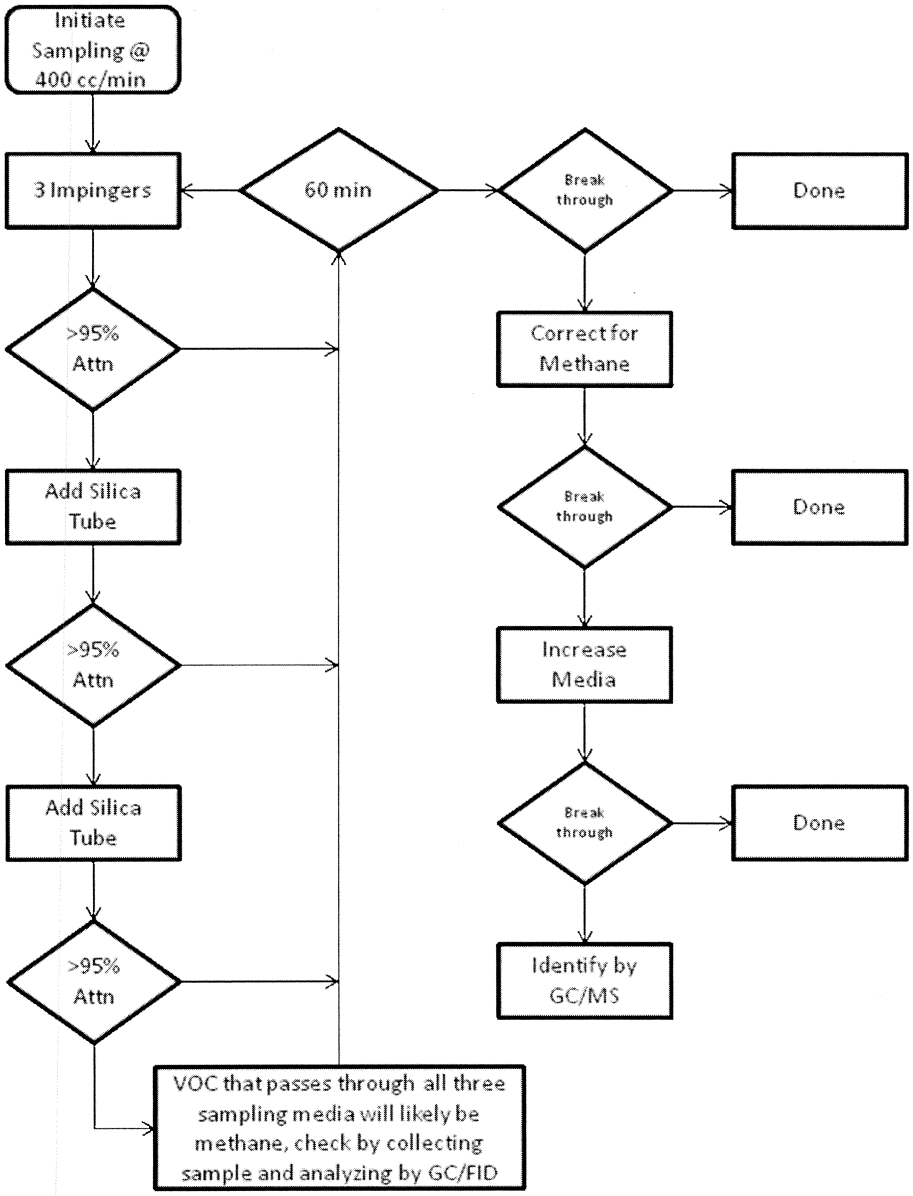

Figure 2. Method 207 Flowchart

[55 FR 14249, Apr. 17, 1990; 55 FR 24687, June 18, 1990, as amended at 55 FR 37606, Sept. 12, 1990; 56 FR 6278, Feb. 15, 1991; 56 FR 65435, Dec. 17, 1991; 60 FR 28054, May 30, 1995; 62 FR 32502, June 16, 1997; 71 FR 55123, Sept. 21, 2006; 73 FR 30779, May 29, 2008; 75 FR 55644, Sept. 13, 2010; 75 FR 80134, Dec. 21, 2010; 79 FR 11235, Feb. 27, 2014; 79 FR 18453, Apr. 2, 2014]

APPENDIXES N–O TO PART 51 [RESERVED]

APPENDIX P TO PART 51—MINIMUM EMISSION MONITORING REQUIREMENTS

1.0 *Purpose*. This appendix P sets forth the minimum requirements for continuous emission monitoring and recording that each State Implementation Plan must include in order to be approved under the provisions of 40 CFR 51.165(b). These requirements include the source categories to be affected; emission monitoring, recording, and reporting requirements for those sources; performance specifications for accuracy, reliability, and durability of acceptable monitoring systems; and techniques to convert emission data to units of the applicable State emission standard. Such data must be reported to the State as an indication of whether proper maintenance and operating procedures are being utilized by source operators to maintain emission levels at or below emission standards. Such data may be used directly or indirectly for compliance determination or any other purpose deemed appropriate by the State. Though the monitoring requirements are specified in detail, States are given some flexibility to resolve difficulties that may arise during the implementation of these regulations.

1.1 *Applicability*. The State plan shall require the owner or operator of an emission source in a category listed in this appendix to: (1) Install, calibrate, operate, and maintain all monitoring equipment necessary for continuously monitoring the pollutants specified in this appendix for the applicable source category; and (2) complete the installation and performance tests of such equipment and begin monitoring and recording within 18 months of plan approval or promulgation. The source categories and the respective monitoring requirements are listed below.

1.1.1 Fossil fuel-fired steam generators, as specified in paragraph 2.1 of this appendix, shall be monitored for opacity, nitrogen oxides emissions, sulfur dioxide emissions, and oxygen or carbon dioxide.

1.1.2 Fluid bed catalytic cracking unit catalyst regenerators, as specified in paragraph 2.4 of this appendix, shall be monitored for opacity.

1.1.3 Sulfuric acid plants, as specified in paragraph 2.3 of this appendix, shall be monitored for sulfur dioxide emissions.

1.1.4 Nitric acid plants, as specified in paragraph 2.2 of this appendix, shall be monitored for nitrogen oxides emissions.

1.2 *Exemptions*. The States may include provisions within their regulations to grant exemptions from the monitoring requirements of paragraph 1.1 of this appendix for any source which is:

1.2.1 Subject to a new source performance standard promulgated in 40 CFR part 60 pursuant to section 111 of the Clean Air Act; or

1.2.2 not subject to an applicable emission standard of an approved plan; or

1.2.3 scheduled for retirement within 5 years after inclusion of monitoring requirements for the source in appendix P, provided that adequate evidence and guarantees are provided that clearly show that the source will cease operations prior to such date.

1.3 *Extensions*. States may allow reasonable extensions of the time provided for installation of monitors for facilities unable to meet the prescribed timeframe (*i.e.*, 18 months from plan approval or promulgation) provided the owner or operator of such facility demonstrates that good faith efforts have been made to obtain and install such devices within such prescribed timeframe.

1.4 *Monitoring System Malfunction*. The State plan may provide a temporary exemption from the monitoring and reporting requirements of this appendix during any period of monitoring system malfunction, provided that the source owner or operator shows, to the satisfaction of the State, that the malfunction was unavoidable and is being repaired as expeditiously as practicable.

2.0 *Minimum Monitoring Requirement*. States must, as a minimum, require the sources listed in paragraph 1.1 of this appendix to meet the following basic requirements.

2.1 *Fossil fuel-fired steam generators*. Each fossil fuel-fired steam generator, except as provided in the following subparagraphs, with an annual average capacity factor of greater than 30 percent, as reported to the Federal Power Commission for calendar year 1974, or as otherwise demonstrated to the State by the owner or operator, shall conform with the following monitoring requirements when such facility is subject to an emission standard of an applicable plan for the pollutant in question.

2.1.1 A continuous monitoring system for the measurement of opacity which meets the performance specifications of paragraph 3.1.1 of this appendix shall be installed, calibrated, maintained, and operated in accordance with the procedures of this appendix by the owner or operator of any such steam generator of greater than 250 million BTU per hour heat input except where:

2.1.1.1 gaseous fuel is the only fuel burned, or

2.1.1.2 oil or a mixture of gas and oil are the only fuels burned and the source is able

to comply with the applicable particulate matter and opacity regulations without utilization of particulate matter collection equipment, and where the source has never been found, through any administrative or judicial proceedings, to be in violation of any visible emission standard of the applicable plan.

2.1.2 A continuous monitoring system for the measurement of sulfur dioxide which meets the performance specifications of paragraph 3.1.3 of this appendix shall be installed, calibrated, maintained, and operated on any fossil fuel-fired steam generator of greater than 250 million BTU per hour heat input which has installed sulfur dioxide pollutant control equipment.

2.1.3 A continuous monitoring system for the measurement of nitrogen oxides which meets the performance specification of paragraph 3.1.2 of this appendix shall be installed, calibrated, maintained, and operated on fossil fuel-fired steam generators of greater than 1000 million BTU per hour heat input when such facility is located in an Air Quality Control Region where the Administrator has specifically determined that a control strategy for nitrogen dioxide is necessary to attain the national standards, unless the source owner or operator demonstrates during source compliance tests as required by the State that such a source emits nitrogen oxides at levels 30 percent or more below the emission standard within the applicable plan.

2.1.4 A continuous monitoring system for the measurement of the percent oxygen or carbon dioxide which meets the performance specifications of paragraphs 3.1.4 or 3.1.5 of this appendix shall be installed, calibrated, operated, and maintained on fossil fuel-fired steam generators where measurements of oxygen or carbon dioxide in the flue gas are required to convert either sulfur dioxide or nitrogen oxides continuous emission monitoring data, or both, to units of the emission standard within the applicable plan.

2.2 *Nitric acid plants.* Each nitric acid plant of greater than 300 tons per day production capacity, the production capacity being expressed as 100 percent acid, located in an Air Quality Control Region where the Administrator has specifically determined that a control strategy for nitrogen dioxide is necessary to attain the national standard shall install, calibrate, maintain, and operate a continuous monitoring system for the measurement of nitrogen oxides which meets the performance specifications of paragraph 3.1.2 for each nitric acid producing facility within such plant.

2.3 *Sulfuric acid plants.* Each Sulfuric acid plant of greater than 300 tons per day production capacity, the production being expressed as 100 percent acid, shall install, calibrate, maintain and operate a continuous monitoring system for the measurement of sulfur dioxide which meets the performance specifications of paragraph 3.1.3 for each sulfuric acid producing facility within such plant.

2.4 *Fluid bed catalytic cracking unit catalyst regenerators at petroleum refineries.* Each catalyst regenerator for fluid bed catalytic cracking units of greater than 20,000 barrels per day fresh feed capacity shall install, calibrate, maintain, and operate a continuous monitoring system for the measurement of opacity which meets the performance specifications of paragraph 3.1.1.

3.0 *Minimum specifications.* All State plans shall require owners or operators of monitoring equipment installed to comply with this appendix, except as provided in paragraph 3.2, to demonstrate compliance with the following performance specifications.

3.1 *Performance specifications.* The performance specifications set forth in appendix B of part 60 are incorporated herein by reference, and shall be used by States to determine acceptability of monitoring equipment installed pursuant to this appendix except that (1) where reference is made to the ''Administrator'' in appendix B, part 60, the term *State* should be inserted for the purpose of this appendix (e.g., in Performance Specification 1, 1.2, '' * * * monitoring systems subject to approval by the *Administrator,*'' should be interpreted as, ''* * * monitoring systems subject to approval by the *State*''), and (2) where reference is made to the ''Reference Method'' in appendix B, part 60, the State may allow the use of either the State approved reference method or the Federally approved reference method as published in part 60 of this chapter. The Performance Specifications to be used with each type of monitoring system are listed below.

3.1.1 Continuous monitoring systems for measuring opacity shall comply with Performance Specification 1.

3.1.2 Continuous monitoring systems for measuring nitrogen oxides shall comply with Performance Specification 2.

3.1.3 Continuous monitoring systems for measuring sulfur dioxide shall comply with Performance Specification 2.

3.1.4 Continuous monitoring systems for measuring oxygen shall comply with Performance Specification 3.

3.1.5 Continuous monitoring systems for measuring carbon dioxide shall comply with Performance Specification 3.

3.2 *Exemptions.* Any source which has purchased an emission monitoring system(s) prior to September 11, 1974, may be exempt from meeting such test procedures prescribed in appendix B of part 60 for a period not to exceed five years from plan approval or promulgation.

3.3 *Calibration Gases.* For nitrogen oxides monitoring systems installed on fossil fuel-fired steam generators the pollutant gas used to prepare calibration gas mixtures

(Section 2.1, Performance Specification 2, appendix B, part 60) shall be nitric oxide (NO). For nitrogen oxides monitoring systems, installed on nitric acid plants the pollutant gas used to prepare calibration gas mixtures (Section 2.1, Performance Specification 2, appendix B, part 60 of this chapter) shall be nitrogen dioxide (NO_2). These gases shall also be used for daily checks under paragraph 3.7 of this appendix as applicable. For sulfur dioxide monitoring systems installed on fossil fuel-fired steam generators or sulfuric acid plants the pollutant gas used to prepare calibration gas mixtures (Section 2.1, Performance Specification 2, appendix B, part 60 of this chapter) shall be sulfur dioxide (SO_2). Span and zero gases should be traceable to National Bureau of Standards reference gases whenever these reference gases are available. Every six months from date of manufacture, span and zero gases shall be reanalyzed by conducting triplicate analyses using the reference methods in appendix A, part 60 of this chapter as follows: for sulfur dioxide, use Reference Method 6; for nitrogen oxides, use Reference Method 7; and for carbon dioxide or oxygen, use Reference Method 3. The gases may be analyzed at less frequent intervals if longer shelf lives are guaranteed by the manufacturer.

3.4 *Cycling times.* Cycling times include the total time a monitoring system requires to sample, analyze and record an emission measurement.

3.4.1 Continuous monitoring systems for measuring opacity shall complete a minimum of one cycle of operation (sampling, analyzing, and data recording) for each successive 10-second period.

3.4.2 Continuous monitoring systems for measuring oxides of nitrogen, carbon dioxide, oxygen, or sulfur dioxide shall complete a minimum of one cycle of operation (sampling, analyzing, and data recording) for each successive 15-minute period.

3.5 *Monitor location.* State plans shall require all continuous monitoring systems or monitoring devices to be installed such that representative measurements of emissions or process parameters (*i.e.*, oxygen, or carbon dioxide) from the affected facility are obtained. Additional guidance for location of continuous monitoring systems to obtain representative samples are contained in the applicable Performance Specifications of appendix B of part 60 of this chapter.

3.6 *Combined effluents.* When the effluents from two or more affected facilities of similar design and operating characteristics are combined before being released to the atmosphere, the State plan may allow monitoring systems to be installed on the combined effluent. When the affected facilities are not of similar design and operating characteristics, or when the effluent from one affected facility is released to the atmosphere through more than one point, the State should establish alternate procedures to implement the intent of these requirements.

3.7 *Zero and drift.* State plans shall require owners or operators of all continuous monitoring systems installed in accordance with the requirements of this appendix to record the zero and span drift in accordance with the method prescribed by the manufacturer of such instruments; to subject the instruments to the manufacturer's recommended zero and span check at least once daily unless the manufacturer has recommended adjustments at shorter intervals, in which case such recommendations shall be followed; to adjust the zero and span whenever the 24-hour zero drift or 24-hour calibration drift limits of the applicable performance specifications in appendix B of part 60 are exceeded; and to adjust continuous monitoring systems referenced by paragraph 3.2 of this appendix whenever the 24-hour zero drift or 24-hour calibration drift exceed 10 percent of the emission standard.

3.8 *Span.* Instrument span should be approximately 200 per cent of the expected instrument data display output corresponding to the emission standard for the source.

3.9 *Alternative procedures and requirements.* In cases where States wish to utilize different, but equivalent, procedures and requirements for continuous monitoring systems, the State plan must provide a description of such alternative procedures for approval by the Administrator. Some examples of situations that may require alternatives follow:

3.9.1 Alternative monitoring requirements to accommodate continuous monitoring systems that require corrections for stack moisture conditions (e.g., an instrument measuring steam generator SO_2 emissions on a wet basis could be used with an instrument measuring oxygen concentration on a dry basis if acceptable methods of measuring stack moisture conditions are used to allow accurate adjustments of the measured SO_2 concentration to dry basis.)

3.9.2 Alternative locations for installing continuous monitoring systems or monitoring devices when the owner or operator can demonstrate that installation at alternative locations will enable accurate and representative measurements.

3.9.3 Alternative procedures for performing calibration checks (e.g., some instruments may demonstrate superior drift characteristics that require checking at less frequent intervals).

3.9.4 Alternative monitoring requirements when the effluent from one affected facility or the combined effluent from two or more identical affected facilities is released to the atmosphere through more than one point (e.g., an extractive, gaseous monitoring system used at several points may be approved if the procedures recommended are suitable for generating accurate emission averages).

3.9.5 Alternative continuous monitoring systems that do not meet the spectral response requirements in Performance Specification 1, appendix B of part 60, but adequately demonstrate a definite and consistent relationship between their measurements and the opacity measurements of a system complying with the requirements in Performance Specification 1. The State may require that such demonstration be performed for each affected facility.

4.0 *Minimum data requirements.* The following paragraphs set forth the minimum data reporting requirements necessary to comply with § 51.214(d) and (e).

4.1 The State plan shall require owners or operators of facilities required to install continuous monitoring systems to submit a written report of excess emissions for each calendar quarter and the nature and cause of the excess emissions, if known. The averaging period used for data reporting should be established by the State to correspond to the averaging period specified in the emission test method used to determine compliance with an emission standard for the pollutant/source category in question. The required report shall include, as a minimum, the data stipulated in this appendix.

4.2 For opacity measurements, the summary shall consist of the magnitude in actual percent opacity of all one-minute (or such other time period deemed appropriate by the State) averages of opacity greater than the opacity standard in the applicable plan for each hour of operation of the facility. Average values may be obtained by integration over the averaging period or by arithmetically averaging a minimum of four equally spaced, instantaneous opacity measurements per minute. Any time period exempted shall be considered before determining the excess averages of opacity (e.g., whenever a regulation allows two minutes of opacity measurements in excess of the standard, the State shall require the source to report all opacity averages, in any one hour, in excess of the standard, minus the two-minute exemption). If more than one opacity standard applies, excess emissions data must be submitted in relation to all such standards.

4.3 For gaseous measurements the summary shall consist of emission averages, in the units of the applicable standard, for each averaging period during which the applicable standard was exceeded.

4.4 The date and time identifying each period during which the continuous monitoring system was inoperative, except for zero and span checks, and the nature of system repairs or adjustments shall be reported. The State may require proof of continuous monitoring system performance whenever system repairs or adjustments have been made.

4.5 When no excess emissions have occurred and the continuous monitoring system(s) have not been inoperative, repaired, or adjusted, such information shall be included in the report.

4.6 The State plan shall require owners or operators of affected facilities to maintain a file of all information reported in the quarterly summaries, and all other data collected either by the continuous monitoring system or as necessary to convert monitoring data to the units of the applicable standard for a minimum of two years from the date of collection of such data or submission of such summaries.

5.0 *Data Reduction.* The State plan shall require owners or operators of affected facilities to use the following procedures for converting monitoring data to units of the standard where necessary.

5.1 For fossil fuel-fired steam generators the following procedures shall be used to convert gaseous emission monitoring data in parts per million to g/million cal (lb/million BTU) where necessary:

5.1.1 When the owner or operator of a fossil fuel-fired steam generator elects under paragraph 2.1.4 of this appendix to measure oxygen in the flue gases, the measurements of the pollutant concentration and oxygen concentration shall each be on a dry basis and the following conversion procedure used:

$$E = CF\ [20.9/20.9 - \%O_2]$$

5.1.2 When the owner or operator elects under paragraph 2.1.4 of this appendix to measure carbon dioxide in the flue gases, the measurement of the pollutant concentration and the carbon dioxide concentration shall each be on a consistent basis (wet or dry) and the following conversion procedure used:

$$E = CF_c\ (100\ /\ \%CO_2)$$

5.1.3 The values used in the equations under paragraph 5.1 are derived as follows:

E = pollutant emission, g/million cal (lb/million BTU),

C = pollutant concentration, g/dscm (lb/dscf), determined by multiplying the average concentration (ppm) for each hourly period by 4.16×10^{-5} M g/dscm per ppm (2.64×10^{-9} M lb/dscf per ppm) where M = pollutant molecular weight, g/g-mole (lb/lb-mole). M = 64 for sulfur dioxide and 46 for oxides of nitrogen.

$\%O_2$, $\%CO_2$ = Oxygen or carbon dioxide volume (expressed as percent) determined with equipment specified under paragraph 4.1.4 of this appendix,

F, F_c = a factor representing a ratio of the volume of dry flue gases generated to the calorific value of the fuel combusted (F), and a factor representing a ratio of the volume of carbon dioxide generated to the calorific value of the fuel combusted (F_c) respectively. Values of F and F_c are given in § 60.45(f) of part 60, as applicable.

5.2 For sulfuric acid plants the owner or operator shall:

5.2.1 establish a conversion factor three times daily according to the procedures to §60.84(b) of this chapter;

5.2.2 multiply the conversion factor by the average sulfur dioxide concentration in the flue gases to obtain average sulfur dioxide emissions in Kg/metric ton (lb/short ton); and

5.2.3 report the average sulfur dioxide emission for each averaging period in excess of the applicable emission standard in the quarterly summary.

5.3 For nitric acid plants the owner or operator shall:

5.3.1 establish a conversion factor according to the procedures of §60.73(b) of this chapter;

5.3.2 multiply the conversion factor by the average nitrogen oxides concentration in the flue gases to obtain the nitrogen oxides emissions in the units of the applicable standard;

5.3.3 report the average nitrogen oxides emission for each averaging period in excess of the applicable emission standard, in the quarterly summary.

5.4 Any State may allow data reporting or reduction procedures varying from those set forth in this appendix if the owner or operator of a source shows to the satisfaction of the State that his procedures are at least as accurate as those in this appendix. Such procedures may include but are not limited to, the following:

5.4.1 Alternative procedures for computing emission averages that do not require integration of data (e.g., some facilities may demonstrate that the variability of their emissions is sufficiently small to allow accurate reduction of data based upon computing averages from equally spaced data points over the averaging period).

5.4.2 Alternative methods of converting pollutant concentration measurements to the units of the emission standards.

6.0 *Special Consideration*. The State plan may provide for approval, on a case-by-case basis, of alternative monitoring requirements different from the provisions of parts 1 through 5 of this appendix if the provisions of this appendix (*i.e.*, the installation of a continuous emission monitoring system) cannot be implemented by a source due to physical plant limitations or extreme economic reasons. To make use of this provision, States must include in their plan specific criteria for determining those physical limitations or extreme economic situations to be considered by the State. In such cases, when the State exempts any source subject to this appendix by use of this provision from installing continuous emission monitoring systems, the State shall set forth alternative emission monitoring and reporting requirements (e.g., periodic manual stack tests) to satisfy the intent of these regulations. Examples of such special cases include, but are not limited to, the following:

6.1 Alternative monitoring requirements may be prescribed when installation of a continuous monitoring system or monitoring device specified by this appendix would not provide accurate determinations of emissions (e.g., condensed, uncombined water vapor may prevent an accurate determination of opacity using commercially available continuous monitoring systems).

6.2 Alternative monitoring requirements may be prescribed when the affected facility is infrequently operated (e.g., some affected facilities may operate less than one month per year).

6.3 Alternative monitoring requirements may be prescribed when the State determines that the requirements of this appendix would impose an extreme economic burden on the source owner or operator.

6.4 Alternative monitoring requirements may be prescribed when the State determines that monitoring systems prescribed by this appendix cannot be installed due to physical limitations at the facility.

[40 FR 46247, Oct. 6, 1975, as amended at 51 FR 40675, Nov. 7, 1986]

APPENDIXES Q–R TO PART 51 [RESERVED]

APPENDIX S TO PART 51—EMISSION OFFSET INTERPRETATIVE RULING

I. INTRODUCTION

This appendix sets forth EPA's Interpretative Ruling on the preconstruction review requirements for stationary sources of air pollution (not including indirect sources) under 40 CFR subpart I and section 129 of the Clean Air Act Amendments of 1977, Public Law 95–95, (note under 42 U.S.C. 7502). A major new source or major modification which would locate in any area designated under section 107(d) of the Act as attainment or unclassifiable for ozone that is located in an ozone transport region or which would locate in an area designated in 40 CFR part 81, subpart C, as nonattainment for a pollutant for which the source or modification would be major may be allowed to construct only if the stringent conditions set forth below are met. These conditions are designed to insure that the new source's emissions will be controlled to the greatest degree possible; that more than equivalent offsetting emission reductions (*emission offsets*) will be obtained from existing sources; and that there will be progress toward achievement of the NAAQS.

For each area designated as exceeding a NAAQS (nonattainment area) under 40 CFR part 81, subpart C, or for any area designated under section 107(d) of the Act as attainment or unclassifiable for ozone that is located in

an ozone transport region, this Interpretative Ruling will be superseded after June 30, 1979 (a) by preconstruction review provisions of the revised SIP, if the SIP meets the requirements of Part D, Title 1, of the Act; or (b) by a prohibition on construction under the applicable SIP and section 110(a)(2)(I) of the Act, if the SIP does not meet the requirements of Part D. The Ruling will remain in effect to the extent not superseded under the Act. This prohibition on major new source construction does not apply to a source whose permit to construct was applied for during a period when the SIP was in compliance with Part D, or before the deadline for having a revised SIP in effect that satisfies Part D.

The requirement of this Ruling shall not apply to any major stationary source or major modification that was not subject to the Ruling as in effect on January 16, 1979, if the owner or operator:

A. Obtained all final Federal, State, and local preconstruction approvals or permits necessary under the applicable State Implementation Plan before August 7, 1980;

B. Commenced construction within 18 months from August 7, 1980, or any earlier time required under the applicable State Implementation Plan; and

C. Did not discontinue construction for a period of 18 months or more and completed construction within a reasonable time.

II. Initial Screening Analyses and Determination of Applicable Requirements

A. *Definitions*—For the purposes of this Ruling:

1. *Stationary source* means any building, structure, facility, or installation which emits or may emit a regulated NSR pollutant.

2. *Building, structure, facility or installation* means all of the pollutant-emitting activities which belong to the same industrial grouping, are located on one or more contiguous or adjacent properties, and are under the control of the same person (or persons under common control) except the activities of any vessel. Pollutant-emitting activities shall be considered as part of the same industrial grouping if they belong to the same ''Major Group'' (*i.e.*, which have the same two digit code) as described in the *Standard Industrial Classification Manual*, 1972, as amended by the 1977 Supplement (U.S. Government Printing Office stock numbers 4101–0066 and 003–005–00176–0, respectively).

3. *Potential to emit* means the maximum capacity of a stationary source to emit a pollutant under its physical and operational design. Any physical or operational limitation on the capacity of the source to emit a pollutant, including air pollution control equipment and restrictions on hours of operation or on the type or amount of material combusted, stored, or processed, shall be treated as part of its design only if the limitation or the effect it would have on emissions is federally enforceable. Secondary emissions do not count in determining the potential to emit of a stationary source.

4. (i) *Major stationary source* means:

(*a*) Any stationary source of air pollutants which emits, or has the potential to emit, 100 tons per year or more of any pollutant subject to regulation under the Act, except that lower emissions thresholds shall apply in areas subject to subpart 2, subpart 3, or subpart 4 of part D, title I of the Act, according to paragraphs II.A.4(i)(*a*)(*1*) through (*6*) of this Ruling.

(*1*) 50 tons per year of volatile organic compounds in any serious ozone nonattainment area.

(*2*) 50 tons per year of volatile organic compounds in an area within an ozone transport region, except for any severe or extreme ozone nonattainment area.

(*3*) 25 tons per year of volatile organic compounds in any severe ozone nonattainment area.

(*4*) 10 tons per year of volatile organic compounds in any extreme ozone nonattainment area.

(*5*) 50 tons per year of carbon monoxide in any serious nonattainment area for carbon monoxide, where stationary sources contribute significantly to carbon monoxide levels in the area (as determined under rules issued by the Administrator)

(*6*) 70 tons per year of PM–10 in any serious nonattainment area for PM–10;

(*b*) For the purposes of applying the requirements of paragraph IV. H of this Ruling to stationary sources of nitrogen oxides located in an ozone nonattainment area or in an ozone transport region, any stationary source which emits, or has the potential to emit, 100 tons per year or more of nitrogen oxides emissions, except that the emission thresholds in paragraphs II.A.4(i)(*b*)(*1*) through (*6*) of this Ruling apply in areas subject to subpart 2 of part D, title I of the Act.

(*1*) 100 tons per year or more of nitrogen oxides in any ozone nonattainment area classified as marginal or moderate.

(*2*) 100 tons per year or more of nitrogen oxides in any ozone nonattainment area classified as a transitional, submarginal, or incomplete or no data area, when such area is located in an ozone transport region.

(*3*) 100 tons per year or more of nitrogen oxides in any area designated under section 107(d) of the Act as attainment or unclassifiable for ozone that is located in an ozone transport region.

(*4*) 50 tons per year or more of nitrogen oxides in any serious nonattainment area for ozone.

(*5*) 25 tons per year or more of nitrogen oxides in any severe nonattainment area for ozone.

(*6*) 10 tons per year or more of nitrogen oxides in any extreme nonattainment area for ozone; or

(*c*) Any physical change that would occur at a stationary source not qualifying under paragraph II.A.4(i)(*a*) or (*b*) of this Ruling as a major stationary source, if the change would constitute a major stationary source by itself.

(ii) A major stationary source that is major for volatile organic compounds or nitrogen oxides is major for ozone.

(iii) The fugitive emissions of a stationary source shall not be included in determining for any of the purposes of this ruling whether it is a major stationary source, unless the source belongs to one of the following categories of stationary sources:

(*a*) Coal cleaning plants (with thermal dryers);

(*b*) Kraft pulp mills;

(*c*) Portland cement plants;

(*d*) Primary zinc smelters;

(*e*) Iron and steel mills;

(*f*) Primary aluminum ore reduction plants;

(*g*) Primary copper smelters;

(*h*) Municipal incinerators capable of charging more than 250 tons of refuse per day;

(*i*) Hydrofluoric, sulfuric, or nitric acid plants;

(*j*) Petroleum refineries;

(*k*) Lime plants;

(*l*) Phosphate rock processing plants;

(*m*) Coke oven batteries;

(*n*) Sulfur recovery plants;

(*o*) Carbon black plants (furnace process);

(*p*) Primary lead smelters;

(*q*) Fuel conversion plants;

(*r*) Sintering plants;

(*s*) Secondary metal production plants;

(*t*) Chemical process plants—The term chemical processing plant shall not include ethanol production facilities that produce ethanol by natural fermentation included in NAICS codes 325193 or 312140;

(*u*) Fossil-fuel boilers (or combination thereof) totaling more than 250 million British thermal units per hour heat input;

(*v*) Petroleum storage and transfer units with a total storage capacity exceeding 300,000 barrels;

(*w*) Taconite ore processing plants;

(*x*) Glass fiber processing plants;

(*y*) Charcoal production plants;

(*z*) Fossil fuel-fired steam electric plants of more than 250 million British thermal units per hour heat input;

(*aa*) Any other stationary source category which, as of August 7, 1980, is being regulated under section 111 or 112 of the Act.

5. (i) *Major modification* means any physical change in or change in the method of operation of a major stationary source that would result in:

(*a*) A significant emissions increase of a regulated NSR pollutant (as defined in paragraph II.A.31 of this Ruling); and

(*b*) A significant net emissions increase of that pollutant from the major stationary source.

(ii) Any significant emissions increase (as defined in paragraph II.A.23 of this Ruling) from any emissions units or net emissions increase (as defined in paragraph II.A.6 of this Ruling) at a major stationary source that is significant for volatile organic compounds shall be considered significant for ozone.

(iii) A physical change or change in the method of operation shall not include:

(*a*) Routine maintenance, repair, and replacement;

(*b*) Use of an alternative fuel or raw material by reason of an order under section 2 (a) and (b) of the Energy Supply and Environmental Coordination Act of 1974 (or any superseding legislation) or by reason of a natural gas curtailment plan pursuant to the Federal Power Act;

(*c*) Use of an alternative fuel by reason of an order or rule under section 125 of the Act;

(*d*) Use of an alternative fuel at a steam generating unit to the extent that the fuel is generated from municipal solid waste;

(*e*) Use of an alternative fuel or raw material by a stationary source which:

(*1*) The source was capable of accommodating before December 21, 1976, unless such change would be prohibited under any federally enforceable permit condition which was established after December 21, 1976, pursuant to 40 CFR 52.21 or under regulations approved pursuant to 40 CFR subpart I or § 51.166; or

(*2*) The source is approved to use under any permit issued under this ruling;

(*f*) An increase in the hours of operation or in the production rate, unless such change is prohibited under any federally enforceable permit condition which was established after December 21, 1976 pursuant to 40 CFR 52.21 or under regulations approved pursuant to 40 CFR subpart I or § 51.166;

(*g*) Any change in ownership at a stationary source.

(iv) For the purpose of applying the requirements of paragraph IV.H of this Ruling to modifications at major stationary sources of nitrogen oxides located in ozone nonattainment areas or in ozone transport regions, whether or not subject with respect to ozone to subpart 2, part D, title I of the Act, any significant net emissions increase of nitrogen oxides is considered significant for ozone.

(v) Any physical change in, or change in the method of operation of, a major stationary source of volatile organic compounds that results in any increase in emissions of volatile organic compounds from any discrete operation, emissions unit, or other pollutant emitting activity at the source shall

be considered a significant net emissions increase and a major modification for ozone, if the major stationary source is located in an extreme ozone nonattainment area that is subject to subpart 2, part D, title I of the Act.

(vi) This definition shall not apply with respect to a particular regulated NSR pollutant when the major stationary source is complying with the requirements under paragraph IV.K of this ruling for a PAL for that pollutant. Instead, the definition at paragraph IV.K.2(viii) of this Ruling shall apply.

(vii) Fugitive emissions shall not be included in determining for any of the purposes of this Ruling whether a physical change in or change in the method of operation of a major stationary source is a major modification, unless the source belongs to one of the source categories listed in paragraph II.A.4(iii) of this Ruling.

6.(i) *Net emissions increase* means, with respect to any regulated NSR pollutant emitted by a major stationary source, the amount by which the sum of the following exceeds zero:

(*a*) The increase in emissions from a particular physical change or change in the method of operation at a stationary source as calculated pursuant to paragraph IV.J of this Ruling; and

(*b*) Any other increases and decreases in actual emissions at the major stationary source that are contemporaneous with the particular change and are otherwise creditable. Baseline actual emissions for calculating increases and decreases under this paragraph II.A.6(i)(*b*) shall be determined as provided in paragraph II.A.30 of this Ruling, except that paragraphs II.A.30(i)(*c*) and II.A.30(ii)(*d*) of this Ruling shall not apply.

(ii) An increase or decrease in actual emissions is contemporaneous with the increase from the particular change only if it occurs between:

(*a*) The date five years before construction on the particular change commences and

(*b*) The date that the increase from the particular change occurs.

(iii) An increase or decrease in actual emissions is creditable only if the reviewing authority has not relied on it in issuing a permit for the source under this Ruling, which permit is in effect when the increase in actual emissions from the particular change occurs.

(iv) An increase in actual emissions is creditable only to the extent that the new level of actual emissions exceeds the old level.

(v) A decrease in actual emissions is creditable only to the extent that:

(*a*) The old level of actual emissions or the old level of allowable emissions, whichever is lower, exceeds the new level of actual emissions;

(*b*) It is enforceable as a practical matter at and after the time that actual construction on the particular change begins;

(*c*) The reviewing authority has not relied on it in issuing any permit under regulations approved pursuant to 40 CFR 51.165; and

(*d*) It has approximately the same qualitative significance for public health and welfare as that attributed to the increase from the particular change.

(vi) An increase that results from a physical change at a source occurs when the emissions unit on which construction occurred becomes operational and begins to emit a particular pollutant. Any replacement unit that requires shakedown becomes operational only after a reasonable shakedown period, not to exceed 180 days.

(vii) Paragraph II.A.13(ii) of this Ruling shall not apply for determining creditable increases and decreases or after a change.

7. *Emissions unit* means any part of a stationary source that emits or would have the potential to emit any regulated NSR pollutant and includes an electric utility steam generating unit as defined in paragraph II.A.21 of this Ruling. For purposes of this Ruling, there are two types of emissions units as described in paragraphs II.A.7(i) and (ii) of this Ruling.

(i) A new emissions unit is any emissions unit which is (or will be) newly constructed and which has existed for less than 2 years from the date such emissions unit first operated.

(ii) An existing emissions unit is any emissions unit that does not meet the requirements in paragraph II.A.7(i) of this Ruling.

8. *Secondary emissions* means emissions which would occur as a result of the construction or operation of a major stationary source or major modification, but do not come from the major stationary source or major modification itself. For the purpose of this Ruling, secondary emissions must be specific, well defined, quantifiable, and impact the same general area as the stationary source or modification which causes the secondary emissions. Secondary emissions include emissions from any offsite support facility which would not be constructed or increase its emissions except as a result of the construction or operation of the major stationary source or major modification. Secondary emissions do not include any emissions which come directly from a mobile source, such as emissions from the tailpipe of a motor vehicle, from a train, or from a vessel.

9. *Fugitive emissions* means those emissions which could not reasonably pass through a stack, chimney, vent, or other functionally equivalent opening.

10. (i) *Significant* means, in reference to a net emissions increase or the potential of a

source to emit any of the following pollutants, a rate of emissions that would equal or exceed any of the following rates:

POLLUTANT AND EMISSIONS RATE

Carbon monoxide: 100 tons per year (tpy)
Nitrogen oxides: 40 tpy
Sulfur dioxide: 40 tpy
Ozone: 40 tpy of volatile organic compounds or nitrogen oxides
Lead: 0.6 tpy
Particulate matter: 25 tpy of particulate matter emissions
PM_{10}: 15 tpy
$PM_{2.5}$: 10 tpy of direct $PM_{2.5}$ emissions; 40 tpy of sulfur dioxide emissions

(ii) Notwithstanding the significant emissions rate for ozone in paragraph II.A.10(i) of this Ruling, significant means, in reference to an emissions increase or a net emissions increase, any increase in actual emissions of volatile organic compounds that would result from any physical change in, or change in the method of operation of, a major stationary source locating in a serious or severe ozone nonattainment area that is subject to subpart 2, part D, title I of the Act, if such emissions increase of volatile organic compounds exceeds 25 tons per year.

(iii) For the purposes of applying the requirements of paragraph IV.H of this Ruling to modifications at major stationary sources of nitrogen oxides located in an ozone nonattainment area or in an ozone transport region, the significant emission rates and other requirements for volatile organic compounds in paragraphs II.A.10(i), (ii), and (v) of this Ruling shall apply to nitrogen oxides emissions.

(iv) Notwithstanding the significant emissions rate for carbon monoxide under paragraph II.A.10(i) of this Ruling, significant means, in reference to an emissions increase or a net emissions increase, any increase in actual emissions of carbon monoxide that would result from any physical change in, or change in the method of operation of, a major stationary source in a serious nonattainment area for carbon monoxide if such increase equals or exceeds 50 tons per year, provided the Administrator has determined that stationary sources contribute significantly to carbon monoxide levels in that area.

(v) Notwithstanding the significant emissions rates for ozone under paragraphs II.A.10(i) and (ii) of this Ruling, any increase in actual emissions of volatile organic compounds from any emissions unit at a major stationary source of volatile organic compounds located in an extreme ozone nonattainment area that is subject to subpart 2, part D, title I of the Act shall be considered a significant net emissions increase.

11. *Allowable emissions* means the emissions rate calculated using the maximum rated capacity of the source (unless the source is subject to federally enforceable limits which restrict the operating rate, or hours of operation, or both) and the most stringent of the following:

(i) Applicable standards as set forth in 40 CFR parts 60 and 61;

(ii) Any applicable State Implementation Plan emissions limitation, including those with a future compliance date; or

(iii) The emissions rate specified as a federally enforceable permit condition, including those with a future compliance date.

12. *Federally enforceable* means all limitations and conditions which are enforceable by the Administrator, including those requirements developed pursuant to 40 CFR parts 60 and 61, requirements within any applicable State implementation plan, any permit requirements established pursuant to 40 CFR 52.21 or under regulations approved pursuant to 40 CFR part 51, subpart I, including operating permits issued under an EPA-approved program that is incorporated into the State implementation plan and expressly requires adherence to any permit issued under such program.

13. (i) *Actual emissions* means the actual rate of emissions of a regulated NSR pollutant from an emissions unit, as determined in accordance with paragraphs II.A.13(ii) through (iv) of this Ruling, except that this definition shall not apply for calculating whether a significant emissions increase has occurred, or for establishing a PAL under paragraph IV.K of this Ruling. Instead, paragraphs II.A.24 and 30 of this Ruling shall apply for those purposes.

(ii) In general, actual emissions as of a particular date shall equal the average rate, in tons per year, at which the unit actually emitted the pollutant during a consecutive 24-month period which precedes the particular date and which is representative of normal source operation. The reviewing authority shall allow the use of a different time period upon a determination that it is more representative of normal source operation. Actual emissions shall be calculated using the unit's actual operating hours, production rates, and types of materials processed, stored, or combusted during the selected time period.

(iii) The reviewing authority may presume that source-specific allowable emissions for the unit are equivalent to the actual emissions of the unit.

(iv) For any emissions unit that has not begun normal operations on the particular date, actual emissions shall equal the potential to emit of the unit on that date.

14. *Construction* means any physical change or change in the method of operation (including fabrication, erection, installation, demolition, or modification of an emissions unit) that would result in a change in emissions.

15. *Commence* as applied to construction of a major stationary source or major modification means that the owner or operator has all necessary preconstruction approvals or permits and either has:

(i) Begun, or caused to begin, a continuous program of actual on-site construction of the source, to be completed within a reasonable time; or

(ii) Entered into binding agreements or contractual obligations, which cannot be cancelled or modified without substantial loss to the owner or operator, to undertake a program of actual construction of the source to be completed within a reasonable time.

16. *Necessary preconstruction approvals or permits* means those permits or approvals required under Federal air quality control laws and regulations and those air quality control laws and regulations which are part of the applicable State Implementation Plan.

17. *Begin actual construction* means, in general, initiation of physical on-site construction activities on an emissions unit which are of a permanent nature. Such activities include, but are not limited to, installation of building supports and foundations, laying of underground pipework, and construction of permanent storage structures. With respect to a change in method of operating this term refers to those on-site activities other than preparatory activities which mark the initiation of the change.

18. *Lowest achievable emission rate (LAER)* means, for any source, the more stringent rate of emissions based on the following:

(i) The most stringent emissions limitation which is contained in the implementation plan of any State for such class or category of stationary source, unless the owner or operator of the proposed stationary source demonstrates that such limitations are not achievable; or

(ii) The most stringent emissions limitation which is achieved in practice by such class or category of stationary source. This limitation, when applied to a modification, means the lowest achievable emissions rate for the new or modified emissions units within the stationary source. In no event shall the application of this term permit a proposed new or modified stationary source to emit any pollutant in excess of the amount allowable under applicable new source standards of performance.

19. *Resource recovery facility* means any facility at which solid waste is processed for the purpose of extracting, converting to energy, or otherwise separating and preparing solid waste for reuse. Energy conversion facilities must utilize solid waste to provide more than 50 percent of the heat input to be considered a resource recovery facility under this Ruling.

20. *Volatile organic compounds (VOC)* is as defined in §51.100(s) of this part.

21. *Electric utility steam generating unit* means any steam electric generating unit that is constructed for the purpose of supplying more than one-third of its potential electric output capacity and more than 25 MW electrical output to any utility power distribution system for sale. Any steam supplied to a steam distribution system for the purpose of providing steam to a steam-electric generator that would produce electrical energy for sale is also considered in determining the electrical energy output capacity of the affected facility.

22. *Pollution prevention* means any activity that through process changes, product reformulation or redesign, or substitution of less polluting raw materials, eliminates or reduces the release of air pollutants (including fugitive emissions) and other pollutants to the environment prior to recycling, treatment, or disposal; it does not mean recycling (other than certain ''in-process recycling'' practices), energy recovery, treatment, or disposal.

23. *Significant emissions increase* means, for a regulated NSR pollutant, an increase in emissions that is significant (as defined in paragraph II.A.10 of this Ruling) for that pollutant.

24. (i) *Projected actual emissions* means, the maximum annual rate, in tons per year, at which an existing emissions unit is projected to emit a regulated NSR pollutant in any one of the 5 years (12-month period) following the date the unit resumes regular operation after the project, or in any one of the 10 years following that date, if the project involves increasing the emissions unit's design capacity or its potential to emit of that regulated NSR pollutant and full utilization of the unit would result in a significant emissions increase or a significant net emissions increase at the major stationary source.

(ii) In determining the projected actual emissions under paragraph II.A.24(i) of this Ruling before beginning actual construction, the owner or operator of the major stationary source:

(*a*) Shall consider all relevant information, including but not limited to, historical operational data, the company's own representations, the company's expected business activity and the company's highest projections of business activity, the company's filings with the State or Federal regulatory authorities, and compliance plans under the approved plan; and

(*b*) Shall include fugitive emissions to the extent quantifiable, and emissions associated with startups, shutdowns, and malfunctions; and

(*c*) Shall exclude, in calculating any increase in emissions that results from the particular project, that portion of the unit's emissions following the project that an existing unit could have accommodated during

the consecutive 24-month period used to establish the baseline actual emissions under paragraph II.A.30 of this Ruling and that are also unrelated to the particular project, including any increased utilization due to product demand growth; or,

(*d*) In lieu of using the method set out in paragraphs II.A.24(ii)(*a*) through (*c*) of this Ruling, may elect to use the emissions unit's potential to emit, in tons per year, as defined under paragraph II.A.3 of this Ruling.

25. *Nonattainment major new source review (NSR) program* means a major source preconstruction permit program that implements Sections I through VI of this Ruling, or a program that has been approved by the Administrator and incorporated into the plan to implement the requirements of § 51.165 of this part. Any permit issued under such a program is a major NSR permit.

26. *Continuous emissions monitoring system (CEMS)* means all of the equipment that may be required to meet the data acquisition and availability requirements of this Ruling, to sample, condition (if applicable), analyze, and provide a record of emissions on a continuous basis.

27. *Predictive emissions monitoring system (PEMS)* means all of the equipment necessary to monitor process and control device operational parameters (for example, control device secondary voltages and electric currents) and other information (for example, gas flow rate, O_2 or CO_2 concentrations), and calculate and record the mass emissions rate (for example, lb/hr) on a continuous basis.

28. *Continuous parameter monitoring system (CPMS)* means all of the equipment necessary to meet the data acquisition and availability requirements of this Ruling, to monitor process and control device operational parameters (for example, control device secondary voltages and electric currents) and other information (for example, gas flow rate, O_2 or CO_2 concentrations), and to record average operational parameter value(s) on a continuous basis.

29. *Continuous emissions rate monitoring system (CERMS)* means the total equipment required for the determination and recording of the pollutant mass emissions rate (in terms of mass per unit of time).

30. *Baseline actual emissions* means the rate of emissions, in tons per year, of a regulated NSR pollutant, as determined in accordance with paragraphs II.A.30(i) through (iv) of this Ruling.

(i) For any existing electric utility steam generating unit, baseline actual emissions means the average rate, in tons per year, at which the unit actually emitted the pollutant during any consecutive 24-month period selected by the owner or operator within the 5-year period immediately preceding when the owner or operator begins actual construction of the project. The reviewing authority shall allow the use of a different time period upon a determination that it is more representative of normal source operation.

(*a*) The average rate shall include fugitive emissions to the extent quantifiable, and emissions associated with startups, shutdowns, and malfunctions.

(*b*) The average rate shall be adjusted downward to exclude any non-compliant emissions that occurred while the source was operating above any emission limitation that was legally enforceable during the consecutive 24-month period.

(*c*) For a regulated NSR pollutant, when a project involves multiple emissions units, only one consecutive 24-month period must be used to determine the baseline actual emissions for the emissions units being changed. A different consecutive 24-month period can be used for each regulated NSR pollutant.

(*d*) The average rate shall not be based on any consecutive 24-month period for which there is inadequate information for determining annual emissions, in tons per year, and for adjusting this amount if required by paragraph II.A.30(i)(*b*) of this Ruling.

(ii) For an existing emissions unit (other than an electric utility steam generating unit), baseline actual emissions means the average rate, in tons per year, at which the emissions unit actually emitted the pollutant during any consecutive 24-month period selected by the owner or operator within the 10-year period immediately preceding either the date the owner or operator begins actual construction of the project, or the date a complete permit application is received by the reviewing authority for a permit required either under this Ruling or under a plan approved by the Administrator, whichever is earlier, except that the 10-year period shall not include any period earlier than November 15, 1990.

(*a*) The average rate shall include fugitive emissions to the extent quantifiable, and emissions associated with startups, shutdowns, and malfunctions.

(*b*) The average rate shall be adjusted downward to exclude any non-compliant emissions that occurred while the source was operating above an emission limitation that was legally enforceable during the consecutive 24-month period.

(*c*) The average rate shall be adjusted downward to exclude any emissions that would have exceeded an emission limitation with which the major stationary source must currently comply, had such major stationary source been required to comply with such limitations during the consecutive 24-month period. However, if an emission limitation is part of a maximum achievable control technology standard that the Administrator proposed or promulgated under part 63 of this chapter, the baseline actual emissions need only be adjusted if the State has taken

credit for such emissions reductions in an attainment demonstration or maintenance plan.

(*d*) For a regulated NSR pollutant, when a project involves multiple emissions units, only one consecutive 24-month period must be used to determine the baseline actual emissions for the emissions units being changed. A different consecutive 24-month period can be used for each regulated NSR pollutant.

(*e*) The average rate shall not be based on any consecutive 24-month period for which there is inadequate information for determining annual emissions, in tons per year, and for adjusting this amount if required by paragraphs II.A.30(ii)(*b*) and (*c*) of this Ruling.

(iii) For a new emissions unit, the baseline actual emissions for purposes of determining the emissions increase that will result from the initial construction and operation of such unit shall equal zero; and thereafter, for all other purposes, shall equal the unit's potential to emit.

(iv) For a PAL for a major stationary source, the baseline actual emissions shall be calculated for existing electric utility steam generating units in accordance with the procedures contained in paragraph II.A.30(i) of this Ruling, for other existing emissions units in accordance with the procedures contained in paragraph II.A.30(ii) of this Ruling, and for a new emissions unit in accordance with the procedures contained in paragraph II.A.30(iii) of this Ruling.

31. *Regulated NSR pollutant*, for purposes of this Ruling, means the following:

(i) Nitrogen oxides or any volatile organic compounds;

(ii) Any pollutant for which a national ambient air quality standard has been promulgated. This includes, but is not limited to, the following:

(*a*) $PM_{2.5}$ emissions and PM_{10} emissions shall include gaseous emissions from a source or activity, which condense to form particulate matter at ambient temperatures. On or after January 1, 2011, such condensable particulate matter shall be accounted for in applicability determinations and in establishing emissions limitations for $PM_{2.5}$ and PM_{10} in permits issued under this ruling. Compliance with emissions limitations for $PM_{2.5}$ and PM_{10} issued prior to this date shall not be based on condensable particulate matter unless required by the terms and conditions of the permit or the applicable implementation plan. Applicability determinations made prior to this date without accounting for condensable particulate matter shall not be considered in violation of this section unless the applicable implementation plan required condensable particulate matter to be included.

(*b*) Any pollutant that is identified under this paragraph II.A.31(ii)(*2*) as a constituent or precursor of a general pollutant listed under paragraph II.A.31(i) or (ii) of this Ruling, provided that such constituent or precursor pollutant may only be regulated under NSR as part of regulation of the general pollutant. Precursors identified by the Administrator for purposes of NSR are the following:

(*1*) Volatile organic compounds and nitrogen oxides are precursors to ozone in all ozone nonattainment areas.

(*2*) Sulfur dioxide is a precursor to $PM_{2.5}$ in all $PM_{2.5}$ nonattainment areas.

32. *Reviewing authority* means the State air pollution control agency, local agency, other State agency, Indian tribe, or other agency issuing permits under this Ruling or authorized by the Administrator to carry out a permit program under §§ 51.165 and 51.166 of this part, or the Administrator in the case of EPA-implemented permit programs under this Ruling or under § 52.21 of this chapter.

33. *Project* means a physical change in, or change in the method of operation of, an existing major stationary source.

34. *Best available control technology (BACT)* means an emissions limitation (including a visible emissions standard) based on the maximum degree of reduction for each regulated NSR pollutant which would be emitted from any proposed major stationary source or major modification which the reviewing authority, on a case-by-case basis, taking into account energy, environmental, and economic impacts and other costs, determines is achievable for such source or modification through application of production processes or available methods, systems, and techniques, including fuel cleaning or treatment or innovative fuel combustion techniques for control of such pollutant. In no event shall application of best available control technology result in emissions of any pollutant which would exceed the emissions allowed by any applicable standard under 40 CFR part 60 or 61. If the reviewing authority determines that technological or economic limitations on the application of measurement methodology to a particular emissions unit would make the imposition of an emissions standard infeasible, a design, equipment, work practice, operational standard, or combination thereof, may be prescribed instead to satisfy the requirement for the application of BACT. Such standard shall, to the degree possible, set forth the emissions reduction achievable by implementation of such design, equipment, work practice or operation, and shall provide for compliance by means which achieve equivalent results.

35. *Prevention of Significant Deterioration (PSD) permit* means any permit that is issued under a major source preconstruction permit program that has been approved by the Administrator and incorporated into the plan to implement the requirements of § 51.166 of

this chapter, or under the program in § 52.21 of this chapter.

36. *Federal Land Manager* means, with respect to any lands in the United States, the Secretary of the department with authority over such lands.

B. *Review of all sources for emission limitation compliance.* The reviewing authority must examine each proposed major new source and proposed major modification[1] to determine if such a source will meet all applicable emission requirements in the SIP, any applicable new source performance standard in part 60 or any national emission standard for hazardous air pollutants in part 61 or part 63 of this chapter. If the reviewing authority determines that the proposed major new source cannot meet the applicable emission requirements, the permit to construct must be denied.

C. *Review of specified sources for air quality impact.* In addition, the reviewing authority must determine whether the major stationary source or major modification would be constructed in an area designated in 40 CFR 81.300 *et seq.* as nonattainment for a pollutant for which the stationary source or modification is major.

D.–E. [Reserved]

F. *Fugitive emission sources.* Section IV.A. of this Ruling shall not apply to a source or modification that would be a major stationary source or major modification only if fugitive emissions, to the extent quantifiable, are considered in calculating the potential to emit of the stationary source or modification and such source does not belong to any of the following categories:

(1) Coal cleaning plants (with thermal dryers);

(2) Kraft pulp mills;

(3) Portland cement plants;

(4) Primary zinc smelters;

(5) Iron and steel mills;

(6) Primary aluminum ore reduction plants;

(7) Primary copper smelters;

(8) Municipal incinerators capable of charging more than 250 tons of refuse per day;

(9) Hydrofluoric, sulfuric, or nitric acid plants;

(10) Petroleum refineries;

(11) Lime plants;

(12) Phosphate rock processing plants;

(13) Coke oven batteries;

(14) Sulfur recovery plants;

(15) Carbon black plants (furnace process);

(16) Primary lead smelters;

(17) Fuel conversion plants;

(18) Sintering plants;

(19) Secondary metal production plants;

(20) Chemical process plants—The term chemical processing plant shall not include ethanol production facilities that produce ethanol by natural fermentation included in NAICS codes 325193 or 312140;

(21) Fossil-fuel boilers (or combination thereof) totaling more than 250 million British thermal units per hour heat input;

(22) Petroleum storage and transfer units with a total storage capacity exceeding 300,000 barrels;

(23) Taconite ore processing plants;

(24) Glass fiber processing plants;

(25) Charcoal production plants;

(26) Fossil fuel-fired steam electric plants of more than 250 million British thermal units per hour heat input;

(27) Any other stationary source category which, as of August 7, 1980, is being regulated under section 111 or 112 of the Act.

G. *Secondary emissions.* Secondary emissions need not be considered in determining whether the emission rates in Section II.C. above would be exceeded. However, if a source is subject to this Ruling on the basis of the direct emissions from the source, the applicable conditions of this Ruling must also be met for secondary emissions. However, secondary emissions may be exempt from Conditions 1 and 2 of Section IV. Also, since EPA's authority to perform or require indirect source review relating to mobile sources regulated under Title II of the Act (motor vehicles and aircraft) has been restricted by statute, consideration of the indirect impacts of motor vehicles and aircraft traffic is not required under this Ruling.

III. SOURCES LOCATING IN DESIGNATED CLEAN OR UNCLASSIFIABLE AREAS WHICH WOULD CAUSE OR CONTRIBUTE TO A VIOLATION OF A NATIONAL AMBIENT AIR QUALITY STANDARD

A. This section applies only to major sources or major modifications which would locate in an area designated in 40 CFR 81.300 *et seq.* as attainment or unclassifiable in a State where EPA has not yet approved the State preconstruction review program required by 40 CFR 51.165(b), if the source or modification would exceed the following significance levels at any locality that does not meet the NAAQS:

[1] Hereafter the term *source* will be used to denote both any source and any modification.

Pollutant	Annual	Averaging time (hours)			
		24	8	3	1
SO_2	1.0 μg/m³	5 μg/m³		25 μg/m³	
PM_{10}	1.0 μg/m³	5 μg/m³			
$PM_{2.5}$	0.3 μg/m³	1.2 μg/m³			
NO_2	1.0 μg/m³				
CO			0.5 mg/m³		2 mg/m³

B. Sources to which this section applies must meet Conditions 1, 2, and 4 of Section IV.A. of this ruling.[2] However, such sources may be exempt from Condition 3 of Section IV.A. of this ruling.

C. *Review of specified sources for air quality impact.* For *stable* air pollutants (*i.e.*, SO_2, particulate matter and CO), the determination of whether a source will cause or contribute to a violation of an NAAQS generally should be made on a case-by-case basis as of the proposed new source's start-up date using the source's allowable emissions in an atmospheric simulation model (unless a source will clearly impact on a receptor which exceeds an NAAQS).

For sources of nitrogen oxides, the initial determination of whether a source would cause or contribute to a violation of the NAAQS for NO_2 should be made using an atmospheric simulation model assuming all the nitric oxide emitted is oxidized to NO_2 by the time the plume reaches ground level. The initial concentration estimates may be adjusted if adequate data are available to account for the expected oxidation rate.

For ozone, sources of volatile organic compounds, locating outside a designated ozone nonattainment area, will be presumed to have no significant impact on the designated nonattainment area. If ambient monitoring indicates that the area of source location is in fact nonattainment, then the source may be permitted under the provisions of any State plan adopted pursuant to section 110(a)(2)(D) of the Act until the area is designated nonattainment and a State Implementation Plan revision is approved. If no State plan pursuant to section 110(a)(2)(D) has been adopted and approved, then this Ruling shall apply.

As noted above, the determination as to whether a source would cause or contribute to a violation of an NAAQS should be made as of the new source's start-up date. Therefore, if a designated nonattainment area is projected to be an attainment area as part of an approved SIP control strategy by the new source start-up date, offsets would not be required if the new source would not cause a new violation.

[2]The discussion in this paragraph is a proposal, but represents EPA's interim policy until final rulemaking is completed.

D. *Sources locating in clean areas*, but would cause a new violating of an NAAQS. If the reviewing authority finds that the emissions from a proposed source would cause a new violation of an NAAQS, but would not contribute to an existing violation, approval may be granted only if both of the following conditions are met:

Condition 1. The new source is required to meet a more stringent emission limitation[3] and/or the control of existing sources below allowable levels is required so that the source will not cause a violation of any NAAQS.

Condition 2. The new emission limitations for the new source as well as any existing sources affected must be enforceable in accordance with the mechanisms set forth in Section V of this appendix.

IV. Sources That Would Locate in a Designated Nonattainment Area

A. *Conditions for approval.* If the reviewing authority finds that the major stationary source or major modification would be constructed in an area designated in 40 CFR 81.300 *et seq* as nonattainment for a pollutant for which the stationary source or modification is major, approval may be granted only if the following conditions are met:

[3]If the reviewing authority determines that technological or economic limitations on the application of measurement methodology to a particular class of sources would make the imposition of an enforceable numerical emission standard infeasible, the authority may instead prescribe a design, operational or equipment standard. In such cases, the reviewing authority shall make its best estimate as to the emission rate that will be achieved and must specify that rate in the required submission to EPA (see Part V). Any permits issued without an enforceable numerical emission standard must contain enforceable conditions which assure that the design characteristics or equipment will be properly maintained (or that the operational conditions will be properly performed) so as to continuously achieve the assumed degree of control. Such conditions shall be enforceable as emission limitations by private parties under section 304. Hereafter, the term *emission limitation* shall also include such design, operational, or equipment standards.

Condition 1. The new source is required to meet an emission Limitation[4] which specifies the lowest achievable emission rate for such source.

Condition 2. The applicant must certify that all existing major sources owned or operated by the applicant (or any entity controlling, controlled by, or under common control with the applicant) in the same State as the proposed source are in compliance with all applicable emission limitations and standards under the Act (or are in compliance with an expeditious schedule which is Federally enforceable or contained in a court decree).

Condition 3. Emission reductions (*offsets*) from existing sources[5] in the area of the proposed source (whether or not under the same ownership) are required such that there will be reasonable progress toward attainment of the applicable NAAQS.[6] Except as provided in paragraph IV.G.5 of this Ruling (addressing $PM_{2.5}$ and its precursors), only intrapollutant emission offsets will be acceptable (e.g., hydrocarbon increases may not be offset against SO_2 reductions).

[5] Subject to the provisions of paragraph IV.C of this Ruling.

[6] The discussion in this paragraph is a proposal, but represents EPA's interim policy until final rulemaking is completed.

Condition 4. The emission offsets will provide a positive net air quality benefit in the affected area (see Section IV.D. below). Atmospheric simulation modeling is not necessary for volatile organic compounds and NO_X. Fulfillment of Condition 3 and Section IV.D. will be considered adequate to meet this condition.

[4] If the reviewing authority determines that technological or economic limitations on the application of measurement methodology to a particular class of sources would make the imposition of an enforceable numerical emission standard infeasible, the authority may instead prescribe a design, operational or equipment standard. In such cases, the reviewing authority shall make its best estimate as to the emission rate that will be achieved and must specify that rate in the required submission to EPA (see Part V). Any permits issued without an enforceable numerical emission standard must contain enforceable conditions which assure that the design characteristics or equipment will be properly maintained (or that the operational conditions will be properly performed) so as to continuously achieve the assumed degree of control. Such conditions shall be enforceable as emission limitations by private parties under section 304. Hereafter, the term *emission limitation* shall also include such design, operational, or equipment standards.

Condition 5. The permit applicant shall conduct an analysis of alternative sites, sizes, production processes and environmental control techniques for such proposed source that demonstrates that the benefits of the proposed source significantly outweigh the environmental and social costs imposed as a result of its location, construction or modification.

B. *Exemptions from certain conditions.* The reviewing authority may exempt the following sources from Condition 1 under Section III or Conditions 3 and 4. Section IV.A.:

(i) Resource recovery facilities burning municipal solid waste, and (ii) sources which must switch fuels due to lack of adequate fuel supplies or where a source is required to be modified as a result of EPA regulations (e.g., lead-in-fuel requirements) and no exemption from such regulation is available to the source. Such an exemption may be granted only if:

1. The applicant demonstrates that it made its best efforts to obtain sufficient emission offsets to comply with Condition 1 under Section III or Conditions 3 and 4 under Section IV.A. and that such efforts were unsuccessful;

2. The applicant has secured all available emission offsets; and

3. The applicant will continue to seek the necessary emission offsets and apply them when they become available.

Such an exemption may result in the need to revise the SIP to provide additional control of existing sources.

Temporary emission sources, such as pilot plants, portable facilities which will be relocated outside of the nonattainment area after a short period of time, and emissions resulting from the construction phase of a new source, are exempt from Conditions 3 and 4 of this section.

C. *Baseline for determining credit for emission and air quality offsets.* The baseline for determining credit for emission and air quality offsets will be the SIP emission limitations in effect at the time the application to construct or modify a source is filed. Thus, credit for emission offset purposes may be allowable for existing control that goes beyond that required by the SIP. Emission offsets generally should be made on a pounds per hour basis when all facilities involved in the emission offset calculations are operating at their maximum expected or allowed production rate. The reviewing agency should specify other averaging periods (e.g., tons per year) in addition to the pounds per hour basis if necessary to carry out the intent of this Ruling. When offsets are calculated on a tons per year basis, the baseline emissions for existing sources providing the offsets should be calculated using the actual annual operating hours for the previous one or two year period (or other appropriate period if warranted by cyclical business conditions).

Where the SIP requires certain hardware controls in lieu of an emission limitation (e.g., floating roof tanks for petroleum storage), baseline allowable emissions should be based on actual operating conditions for the previous one or two year period (*i.e.*, actual throughput and vapor pressures) in conjunction with the required hardware controls.

1. *No meaningful or applicable SIP requirement.* Where the applicable SIP does not contain an emission limitation for a source or source category, the emission offset baseline involving such sources shall be the actual emissions determined in accordance with the discussion above regarding operating conditions.

Where the SIP emission limit allows greater emissions than the uncontrolled emission rate of the source (as when a State has a single particulate emission limit for all fuels), emission offset credit will be allowed only for control below the uncontrolled emission rate.

2. *Combustion of fuels.* Generally, the emissions for determining emission offset credit involving an existing fuel combustion source will be the allowable emissions under the SIP for the type of fuel being burned at the time the new source application is filed (*i.e.*, if the existing source has switched to a different type of fuel at some earlier date, any resulting emission reduction [either actual or allowable] shall not be used for emission offset credit). If the existing source commits to switch to a cleaner fuel at some future date, emission offset credit based on the allowable emissions for the fuels involved is not acceptable unless the permit is conditioned to require the use of a specified alternative control measure which would achieve the same degree of emission reduction should the source switch back to a dirtier fuel at some later date. The reviewing authority should ensure that adequate long-term supplies of the new fuel are available before granting emission offset credit for fuel switches.

3. Emission Reduction Credits from Shutdowns and Curtailments.

(i) Emissions reductions achieved by shutting down an existing source or curtailing production or operating hours may be generally credited for offsets if they meet the requirements in paragraphs IV.C.3.i.1. through 2 of this section.

(1) Such reductions are surplus, permanent, quantifiable, and federally enforceable.

(2) The shutdown or curtailment occurred after the last day of the base year for the SIP planning process. For purposes of this paragraph, a reviewing authority may choose to consider a prior shutdown or curtailment to have occurred after the last day of the base year if the projected emissions inventory used to develop the attainment demonstration explicitly includes the emissions from such previously shutdown or curtailed emission units. However, in no event may credit be given for shutdowns that occurred before August 7, 1977.

(ii) Emissions reductions achieved by shutting down an existing source or curtailing production or operating hours and that do not meet the requirements in paragraphs IV.C.3.i.1. through 2 of this section may be generally credited only if:

(1) The shutdown or curtailment occurred on or after the date the new source permit application is filed; or

(2) The applicant can establish that the proposed new source is a replacement for the shutdown or curtailed source, and the emissions reductions achieved by the shutdown or curtailment met the requirements of paragraphs IV.C.3.i.1. through 2 of this section.

4. *Credit for VOC substitution.* As set forth in the Agency's ''Recommended Policy on Control of Volatile Organic Compounds'' (42 FR 35314, July 8, 1977), EPA has found that almost all non-methane VOCs are photochemically reactive and that low reactivity VOCs eventually form as much ozone as the highly reactive VOCs. Therefore, no emission offset credit may be allowed for replacing one VOC compound with another of lesser reactivity, except for those compounds listed in Table 1 of the above policy statement.

5. *''Banking'' of emission offset credit.* For new sources obtaining permits by applying offsets after January 16, 1979, the reviewing authority may allow offsets that exceed the requirements of reasonable progress toward attainment (Condition 3) to be ''banked'' (*i.e.*, saved to provide offsets for a source seeking a permit in the future) for use under this Ruling. Likewise, the reviewing authority may allow the owner of an existing source that reduces its own emissions to bank any resulting reductions beyond those required by the SIP for use under this Ruling, even if none of the offsets are applied immediately to a new source permit. A reviewing authority may allow these banked offsets to be used under the preconstruction review program required by Part D, as long as these banked emissions are identified and accounted for in the SIP control strategy. A reviewing authority may not approve the construction of a source using banked offsets if the new source would interfere with the SIP control strategy or if such use would violate any other condition set forth for use of offsets. To preserve banked offsets, the reviewing authority should identify them in either a SIP revision or a permit, and establish rules as to how and when they may be used.

6. *Offset credit for meeting NSPS or NESHAPS.* Where a source is subject to an emission limitation established in a New Source Performance Standard (NSPS) or a National Emission Standard for Hazardous

Air Pollutants (NESHAPS), (*i.e.*, requirements under sections 111 and 112, respectively, of the Act), and a different SIP limitation, the more stringent limitation shall be used as the baseline for determining credit for emission and air quality offsets. The difference in emissions between the SIP and the NSPS or NESHAPS, for such source may not be used as offset credit. However, if a source were not subject to an NSPS or NESHAPS, for example if its construction had commenced prior to the proposal of an NSPS or NESHAPS for that source category, offset credit can be permitted for tightening the SIP to the NSPS or NESHAPS level for such source.

D. *Location of offsetting emissions.* The owner or operator of a new or modified major stationary source may comply with any offset requirement in effect under this Ruling for increased emissions of any air pollutant only by obtaining emissions reductions of such air pollutant from the same source or other sources in the same nonattainment area, except that the reviewing authority may allow the owner or operator of a source to obtain such emissions reductions in another nonattainment area if the conditions in IV.D.1 and 2 are met.

1. The other area has an equal or higher nonattainment classification than the area in which the source is located.

2. Emissions from such other area contribute to a violation of the national ambient air quality standard in the nonattainment area in which the source is located.

E. *Reasonable further progress.* Permits to construct and operate may be issued if the reviewing authority determines that, by the time the source is to commence operation, sufficient offsetting emissions reductions have been obtained, such that total allowable emissions from existing sources in the region, from new or modified sources which are not major emitting facilities, and from the proposed source will be sufficiently less than total emissions from existing sources prior to the application for such permit to construct or modify so as to represent (when considered together with the plan provisions required under CAA section 172) reasonable further progress (as defined in CAA section 171).

F. *Source obligation.* At such time that a particular source or modification becomes a major stationary source or major modification solely by virtue of a relaxation in any enforceable limitation which was established after August 7, 1980, on the capacity of the source or modification otherwise to emit a pollutant, such as a restriction on hours of operation, then the requirements of this Ruling shall apply to the source or modification as though construction had not yet commenced on the source or modification.

G. *Offset Ratios.*

1. In meeting the emissions offset requirements of paragraph IV.A, Condition 3 of this Ruling, the ratio of total actual emissions reductions to the emissions increase shall be at least 1:1 unless an alternative ratio is provided for the applicable nonattainment area in paragraphs IV.G.2 through IV.G.4.

2. In meeting the emissions offset requirements of paragraph IV.A, Condition 3 of this Ruling for ozone nonattainment areas that are subject to subpart 2, part D, title I of the Act, the ratio of total actual emissions reductions of VOC to the emissions increase of VOC shall be as follows:

(i) In any marginal nonattainment area for ozone—at least 1.1:1;

(ii) In any moderate nonattainment area for ozone—at least 1.15:1;

(iii) In any serious nonattainment area for ozone—at least 1.2:1;

(iv) In any severe nonattainment area for ozone—at least 1.3:1 (except that the ratio may be at least 1.2:1 if the State also requires all existing major sources in such nonattainment area to use BACT for the control of VOC); and

(v) In any extreme nonattainment area for ozone—at least 1.5:1 (except that the ratio may be at least 1.2:1 if the State also requires all existing major sources in such nonattainment area to use BACT for the control of VOC); and

3. Notwithstanding the requirements of paragraph IV.G.2 of this Ruling for meeting the requirements of paragraph IV.A, Condition 3 of this Ruling, the ratio of total actual emissions reductions of VOC to the emissions increase of VOC shall be at least 1.15:1 for all areas within an ozone transport region that is subject to subpart 2, part D, title I of the Act, except for serious, severe, and extreme ozone nonattainment areas that are subject to subpart 2, part D, title I of the Act.

4. In meeting the emissions offset requirements of paragraph IV.A, Condition 3 of this Ruling for ozone nonattainment areas that are subject to subpart 1, part D, title I of the Act (but are not subject to subpart 2, part D, title I of the Act, including 8-hour ozone nonattainment areas subject to 40 CFR 51.902(b)), the ratio of total actual emissions reductions of VOC to the emissions increase of VOC shall be at least 1:1.

5. *Interpollutant offsetting.* In meeting the emissions offset requirements of paragraph IV.A, Condition 3 of this Ruling, the emissions offsets obtained shall be for the same regulated NSR pollutant unless interpollutant offsetting is permitted for a particular pollutant as specified in this paragraph IV.G.5. The offset requirements of paragraph IV.A, Condition 3 of this Ruling for direct $PM_{2.5}$ emissions or emissions of precursors of $PM_{2.5}$ may be satisfied by offsetting reductions of direct $PM_{2.5}$ emissions or emissions

of any $PM_{2.5}$ precursor identified under paragraph II.A.31 (iii) of this Ruling if such offsets comply with an interprecursor trading hierarchy and ratio approved by the Administrator.

H. *Additional provisions for emissions of nitrogen oxides in ozone transport regions and nonattainment areas.* The requirements of this Ruling applicable to major stationary sources and major modifications of volatile organic compounds shall apply to nitrogen oxides emissions from major stationary sources and major modifications of nitrogen oxides in an ozone transport region or in any ozone nonattainment area, except in ozone nonattainment areas where the Administrator has granted a NO_X waiver applying the standards set forth under 182(f) and the waiver continues to apply.

I. *Applicability procedures.*

1. To determine whether a project constitutes a major modification, the reviewing authority shall apply the principles set out in paragraphs IV.I.1(i) through (v) of this Ruling.

(i) Except as otherwise provided in paragraph IV.I.2 of this Ruling, and consistent with the definition of major modification contained in paragraph II.A.5 of this Ruling, a project is a major modification for a regulated NSR pollutant if it causes two types of emissions increases—a significant emissions increase (as defined in paragraph II.A.23 of this Ruling), and a significant net emissions increase (as defined in paragraphs II.A.6 and 10 of this Ruling). The project is not a major modification if it does not cause a significant emissions increase. If the project causes a significant emissions increase, then the project is a major modification only if it also results in a significant net emissions increase.

(ii) The procedure for calculating (before beginning actual construction) whether a significant emissions increase (*i.e.*, the first step of the process) will occur depends upon the type of emissions units being modified, according to paragraphs IV.I.1(iii) through (v) of this Ruling. The procedure for calculating (before beginning actual construction) whether a significant net emissions increase will occur at the major stationary source (*i.e.*, the second step of the process) is contained in the definition in paragraph II.A.6 of this Ruling. Regardless of any such preconstruction projections, a major modification results if the project causes a significant emissions increase and a significant net emissions increase.

(iii) *Actual-to-projected-actual applicability test for projects that only involve existing emissions units.* A significant emissions increase of a regulated NSR pollutant is projected to occur if the sum of the difference between the projected actual emissions (as defined in paragraph II.A.24 of this Ruling) and the baseline actual emissions (as defined in paragraphs II.A.30(i) and (ii) of this Ruling, as applicable), for each existing emissions unit, equals or exceeds the significant amount for that pollutant (as defined in paragraph II.A.10 of this Ruling).

(iv) *Actual-to-potential test for projects that only involve construction of a new emissions unit(s).* A significant emissions increase of a regulated NSR pollutant is projected to occur if the sum of the difference between the potential to emit (as defined in paragraph II.A.3 of this Ruling) from each new emissions unit following completion of the project and the baseline actual emissions (as defined in paragraph II.A.30(iii) of this Ruling) of these units before the project equals or exceeds the significant amount for that pollutant (as defined in paragraph II.A.10 of this Ruling).

(v) *Hybrid test for projects that involve multiple types of emissions units.* A significant emissions increase of a regulated NSR pollutant is projected to occur if the sum of the emissions increases for each emissions unit, using the method specified in paragraphs IV.I.1(iii) through (iv) of this Ruling as applicable with respect to each emissions unit, for each type of emissions unit equals or exceeds the significant amount for that pollutant (as defined in paragraph II.A.10 of this Ruling).

2. For any major stationary source for a PAL for a regulated NSR pollutant, the major stationary source shall comply with requirements under paragraph IV.K of this Ruling.

J. *Provisions for projected actual emissions.* Except as otherwise provided in paragraph IV.J.6(ii) of this Ruling, the provisions of this paragraph IV.J apply with respect to any regulated NSR pollutant emitted from projects at existing emissions units at a major stationary source (other than projects at a source with a PAL) in circumstances where there is a reasonable possibility, within the meaning of paragraph IV.J.6 of this Ruling, that a project that is not a part of a major modification may result in a significant emissions increase of such pollutant, and the owner or operator elects to use the method specified in paragraphs II.A.24(ii)(a) through (c) of this Ruling for calculating projected actual emissions.

1. Before beginning actual construction of the project, the owner or operator shall document and maintain a record of the following information:

(i) A description of the project;

(ii) Identification of the emissions unit(s) whose emissions of a regulated NSR pollutant could be affected by the project; and

(iii) A description of the applicability test used to determine that the project is not a major modification for any regulated NSR pollutant, including the baseline actual emissions, the projected actual emissions, the amount of emissions excluded under paragraph II.A.24(ii)(*c*) of this Ruling and an

explanation for why such amount was excluded, and any netting calculations, if applicable.

2. If the emissions unit is an existing electric utility steam generating unit, before beginning actual construction, the owner or operator shall provide a copy of the information set out in paragraph IV.J.1 of this Ruling to the reviewing authority. Nothing in this paragraph IV.J.2 shall be construed to require the owner or operator of such a unit to obtain any determination from the reviewing authority before beginning actual construction.

3. The owner or operator shall monitor the emissions of any regulated NSR pollutant that could increase as a result of the project and that is emitted by any emissions units identified in paragraph IV.J.1(ii) of this Ruling; and calculate and maintain a record of the annual emissions, in tons per year on a calendar year basis, for a period of 5 years following resumption of regular operations after the change, or for a period of 10 years following resumption of regular operations after the change if the project increases the design capacity or potential to emit of that regulated NSR pollutant at such emissions unit.

4. If the unit is an existing electric utility steam generating unit, the owner or operator shall submit a report to the reviewing authority within 60 days after the end of each year, during which records must be generated under paragraph IV.J.3 of this Ruling setting out the unit's annual emissions during the year that preceded submission of the report.

5. If the unit is an existing unit other than an electric utility steam generating unit, the owner or operator shall submit a report to the reviewing authority if the annual emissions, in tons per year, from the project identified in paragraph IV.J.1 of this Ruling, exceed the baseline actual emissions (as documented and maintained pursuant to paragraph IV.J.1(iii) of this Ruling) by a significant amount (as defined in paragraph II.A.10 of this Ruling) for that regulated NSR pollutant, and if such emissions differ from the preconstruction projection as documented and maintained pursuant to paragraph IV.J.1(iii) of this Ruling. Such report shall be submitted to the reviewing authority within 60 days after the end of such year. The report shall contain the following:

(i) The name, address and telephone number of the major stationary source;

(ii) The annual emissions as calculated pursuant to paragraph IV.J.3 of this Ruling; and

(iii) Any other information that the owner or operator wishes to include in the report (e.g., an explanation as to why the emissions differ from the preconstruction projection).

6. A ''reasonable possibility'' under paragraph IV.J of this Ruling occurs when the owner or operator calculates the project to result in either:

(i) A projected actual emissions increase of at least 50 percent of the amount that is a ''significant emissions increase,'' as defined under paragraph II.A.23 of this Ruling (without reference to the amount that is a significant net emissions increase), for the regulated NSR pollutant; or

(ii) A projected actual emissions increase that, added to the amount of emissions excluded under paragraph II.A.24(ii)(*c*), sums to at least 50 percent of the amount that is a ''significant emissions increase,'' as defined under paragraph II.A.23 of this Ruling (without reference to the amount that is a significant net emissions increase), for the regulated NSR pollutant. For a project for which a reasonable possibility occurs only within the meaning of paragraph IV.J.6(ii) of this Ruling, and not also within the meaning of paragraph IV.J.6(i) of this Ruling, then provisions IV.J.2 through IV.J.5 do not apply to the project.

7. The owner or operator of the source shall make the information required to be documented and maintained pursuant to this paragraph IV.J of this Ruling available for review upon a request for inspection by the reviewing authority or the general public pursuant to the requirements contained in §70.4(b)(3)(viii) of this chapter.

K. *Actuals PALs*. The provisions in paragraphs IV.K.1 through 15 of this Ruling govern actuals PALs.

1. Applicability.

(i) The reviewing authority may approve the use of an actuals PAL for any existing major stationary source (except as provided in paragraph IV.K.1(ii) of this Ruling) if the PAL meets the requirements in paragraphs IV.K.1 through 15 of this Ruling. The term ''PAL'' shall mean ''actuals PAL'' throughout paragraph IV.K of this Ruling.

(ii) The reviewing authority shall not allow an actuals PAL for VOC or NO_X for any major stationary source located in an extreme ozone nonattainment area.

(iii) Any physical change in or change in the method of operation of a major stationary source that maintains its total source-wide emissions below the PAL level, meets the requirements in paragraphs IV.K.1 through 15 of this Ruling, and complies with the PAL permit:

(*a*) Is not a major modification for the PAL pollutant;

(*b*) Does not have to be approved through a nonattainment major NSR program; and

(*c*) Is not subject to the provisions in paragraph IV.F of this Ruling (restrictions on relaxing enforceable emission limitations that the major stationary source used to avoid applicability of a nonattainment major NSR program).

(iv) Except as provided under paragraph IV.K.1(iii)(*c*) of this Ruling, a major stationary source shall continue to comply with all applicable Federal or State requirements, emission limitations, and work practice requirements that were established prior to the effective date of the PAL.

2. *Definitions*. For the purposes of this paragraph IV.K, the definitions in paragraphs IV.K.2(i) through (xi) of this Ruling apply. When a term is not defined in these paragraphs, it shall have the meaning given in paragraph II.A of this Ruling or in the Act.

(i) *Actuals PAL* for a major stationary source means a PAL based on the baseline actual emissions (as defined in paragraph II.A.30 of this Ruling) of all emissions units (as defined in paragraph II.A.7 of this Ruling) at the source, that emit or have the potential to emit the PAL pollutant.

(ii) *Allowable emissions* means ''allowable emissions'' as defined in paragraph II.A.11 of this Ruling, except as this definition is modified according to paragraphs IV.K.2(ii)(*a*) through (*b*) of this Ruling.

(*a*) The allowable emissions for any emissions unit shall be calculated considering any emission limitations that are enforceable as a practical matter on the emissions unit's potential to emit.

(*b*) An emissions unit's potential to emit shall be determined using the definition in paragraph II.A.3 of this Ruling, except that the words ''enforceable as a practical matter'' should be added after ''federally enforceable.''

(iii) *Small emissions unit* means an emissions unit that emits or has the potential to emit the PAL pollutant in an amount less than the significant level for that PAL pollutant, as defined in paragraph II.A.10 of this Ruling or in the Act, whichever is lower.

(iv) Major emissions unit means:

(*a*) Any emissions unit that emits or has the potential to emit 100 tons per year or more of the PAL pollutant in an attainment area; or

(*b*) Any emissions unit that emits or has the potential to emit the PAL pollutant in an amount that is equal to or greater than the major source threshold for the PAL pollutant as defined by the Act for nonattainment areas. For example, in accordance with the definition of major stationary source in section 182(c) of the Act, an emissions unit would be a major emissions unit for VOC if the emissions unit is located in a serious ozone nonattainment area and it emits or has the potential to emit 50 or more tons of VOC per year.

(v) *Plantwide applicability limitation (PAL)* means an emission limitation expressed in tons per year, for a pollutant at a major stationary source, that is enforceable as a practical matter and established source-wide in accordance with paragraphs IV.K.1 through 15 of this Ruling.

(vi) *PAL effective date* generally means the date of issuance of the PAL permit. However, the PAL effective date for an increased PAL is the date any emissions unit which is part of the PAL major modification becomes operational and begins to emit the PAL pollutant.

(vii) *PAL effective period* means the period beginning with the PAL effective date and ending 10 years later.

(viii) *PAL major modification* means, notwithstanding paragraphs II.A.5 and 6 of this Ruling (the definitions for major modification and net emissions increase), any physical change in or change in the method of operation of the PAL source that causes it to emit the PAL pollutant at a level equal to or greater than the PAL.

(ix) *PAL permit* means the permit issued under this Ruling, the major NSR permit, the minor NSR permit, or the State operating permit under a program that is approved into the plan, or the title V permit issued by the reviewing authority that establishes a PAL for a major stationary source.

(x) *PAL pollutant* means the pollutant for which a PAL is established at a major stationary source.

(xi) *Significant emissions unit* means an emissions unit that emits or has the potential to emit a PAL pollutant in an amount that is equal to or greater than the significant level (as defined in paragraph II.A.10 of this Ruling or in the Act, whichever is lower) for that PAL pollutant, but less than the amount that would qualify the unit as a major emissions unit as defined in paragraph IV.K.2(iv) of this Ruling.

3. *Permit application requirements*. As part of a permit application requesting a PAL, the owner or operator of a major stationary source shall submit the following information to the reviewing authority for approval:

(i) A list of all emissions units at the source designated as small, significant or major based on their potential to emit. In addition, the owner or operator of the source shall indicate which, if any, Federal or State applicable requirements, emission limitations or work practices apply to each unit.

(ii) Calculations of the baseline actual emissions (with supporting documentation). Baseline actual emissions are to include emissions associated not only with operation of the unit, but also emissions associated with startup, shutdown and malfunction.

(iii) The calculation procedures that the major stationary source owner or operator proposes to use to convert the monitoring system data to monthly emissions and annual emissions based on a 12-month rolling total for each month as required by paragraph IV.K.13(i) of this Ruling.

4. General requirements for establishing PALs.

(i) The reviewing authority is allowed to establish a PAL at a major stationary

source, provided that at a minimum, the requirements in paragraphs IV.K.4(i) (*a*) through (*g*) of this Ruling are met.

(*a*) The PAL shall impose an annual emission limitation in tons per year, that is enforceable as a practical matter, for the entire major stationary source. For each month during the PAL effective period after the first 12 months of establishing a PAL, the major stationary source owner or operator shall show that the sum of the monthly emissions from each emissions unit under the PAL for the previous 12 consecutive months is less than the PAL (a 12-month average, rolled monthly). For each month during the first 11 months from the PAL effective date, the major stationary source owner or operator shall show that the sum of the preceding monthly emissions from the PAL effective date for each emissions unit under the PAL is less than the PAL.

(*b*) The PAL shall be established in a PAL permit that meets the public participation requirements in paragraph IV.K.5 of this Ruling.

(*c*) The PAL permit shall contain all the requirements of paragraph IV.K.7 of this Ruling.

(*d*) The PAL shall include fugitive emissions, to the extent quantifiable, from all emissions units that emit or have the potential to emit the PAL pollutant at the major stationary source.

(*e*) Each PAL shall regulate emissions of only one pollutant.

(*f*) Each PAL shall have a PAL effective period of 10 years.

(*g*) The owner or operator of the major stationary source with a PAL shall comply with the monitoring, recordkeeping, and reporting requirements provided in paragraphs IV.K. 12 through 14 of this Ruling for each emissions unit under the PAL through the PAL effective period.

(ii) At no time (during or after the PAL effective period) are emissions reductions of a PAL pollutant, which occur during the PAL effective period, creditable as decreases for purposes of offsets under paragraph IV.C of this Ruling unless the level of the PAL is reduced by the amount of such emissions reductions and such reductions would be creditable in the absence of the PAL.

5. *Public participation requirement for PALs.* PALs for existing major stationary sources shall be established, renewed, or increased through a procedure that is consistent with ((51.160 and 51.161 of this chapter. This includes the requirement that the reviewing authority provide the public with notice of the proposed approval of a PAL permit and at least a 30-day period for submittal of public comment. The reviewing authority must address all material comments before taking final action on the permit.

6. *Setting the 10-year actuals PAL level.* The actuals PAL level for a major stationary source shall be established as the sum of the baseline actual emissions (as defined in paragraph II.A.30 of this Ruling) of the PAL pollutant for each emissions unit at the source; plus an amount equal to the applicable significant level for the PAL pollutant under paragraph II.A.10 of this Ruling or under the Act, whichever is lower. When establishing the actuals PAL level, for a PAL pollutant, only one consecutive 24-month period must be used to determine the baseline actual emissions for all existing emissions units. However, a different consecutive 24-month period may be used for each different PAL pollutant. Emissions associated with units that were permanently shut down after this 24-month period must be subtracted from the PAL level. Emissions from units on which actual construction began after the 24-month period must be added to the PAL level in an amount equal to the potential to emit of the units. The reviewing authority shall specify a reduced PAL level(s) (in tons/yr) in the PAL permit to become effective on the future compliance date(s) of any applicable Federal or State regulatory requirement(s) that the reviewing authority is aware of prior to issuance of the PAL permit. For instance, if the source owner or operator will be required to reduce emissions from industrial boilers in half from baseline emissions of 60 ppm NO_X to a new rule limit of 30 ppm, then the permit shall contain a future effective PAL level that is equal to the current PAL level reduced by half of the original baseline emissions of such unit(s).

7. *Contents of the PAL permit.* The PAL permit contain, at a minimum, the information in paragraphs IV.K.7 (i) through (x) of this Ruling.

(i) The PAL pollutant and the applicable source-wide emission limitation in tons per year.

(ii) The PAL permit effective date and the expiration date of the PAL (PAL effective period).

(iii) Specification in the PAL permit that if a major stationary source owner or operator applies to renew a PAL in accordance with paragraph IV.K.10 of this Ruling before the end of the PAL effective period, then the PAL shall not expire at the end of the PAL effective period. It shall remain in effect until a revised PAL permit is issued by the reviewing authority.

(iv) A requirement that emission calculations for compliance purposes include emissions from startups, shutdowns and malfunctions.

(v) A requirement that, once the PAL expires, the major stationary source is subject to the requirements of paragraph IV.K.9 of this Ruling.

(vi) The calculation procedures that the major stationary source owner or operator shall use to convert the monitoring system

data to monthly emissions and annual emissions based on a 12-month rolling total for each month as required by paragraph IV.K.13(i) of this Ruling.

(vii) A requirement that the major stationary source owner or operator monitor all emissions units in accordance with the provisions under paragraph IV.K.12 of this Ruling.

(viii) A requirement to retain the records required under paragraph IV.K.13 of this Ruling on site. Such records may be retained in an electronic format.

(ix) A requirement to submit the reports required under paragraph IV.K.14 of this Ruling by the required deadlines.

(x) Any other requirements that the reviewing authority deems necessary to implement and enforce the PAL.

8. *PAL effective period and reopening of the PAL permit*. The requirements in paragraphs IV.K.8(i) and (ii) of this Ruling apply to actuals PALs.

(i) *PAL effective period*. The reviewing authority shall specify a PAL effective period of 10 years.

(ii) Reopening of the PAL permit.

(*a*) During the PAL effective period, the reviewing authority must reopen the PAL permit to:

(*1*) Correct typographical/calculation errors made in setting the PAL or reflect a more accurate determination of emissions used to establish the PAL.

(*2*) Reduce the PAL if the owner or operator of the major stationary source creates creditable emissions reductions for use as offsets under paragraph IV.C of this Ruling.

(*3*) Revise the PAL to reflect an increase in the PAL as provided under paragraph IV.K.11 of this Ruling.

(*b*) The reviewing authority shall have discretion to reopen the PAL permit for the following:

(*1*) Reduce the PAL to reflect newly applicable Federal requirements (for example, NSPS) with compliance dates after the PAL effective date.

(*2*) Reduce the PAL consistent with any other requirement, that is enforceable as a practical matter, and that the State may impose on the major stationary source under the plan.

(*3*) Reduce the PAL if the reviewing authority determines that a reduction is necessary to avoid causing or contributing to a NAAQS or PSD increment violation, or to an adverse impact on an air quality related value that has been identified for a Federal Class I area by a Federal Land Manager and for which information is available to the general public.

(*c*) Except for the permit reopening in paragraph IV.K.8(ii)(*a*)(*1*) of this Ruling for the correction of typographical/calculation errors that do not increase the PAL level, all other reopenings shall be carried out in accordance with the public participation requirements of paragraph IV.K.5 of this Ruling.

9. *Expiration of a PAL*. Any PAL which is not renewed in accordance with the procedures in paragraph IV.K.10 of this Ruling shall expire at the end of the PAL effective period, and the requirements in paragraphs IV.K.9(i) through (v) of this Ruling shall apply.

(i) Each emissions unit (or each group of emissions units) that existed under the PAL shall comply with an allowable emission limitation under a revised permit established according to the procedures in paragraphs IV.K.9(i)(*a*) through (*b*) of this Ruling.

(*a*) Within the time frame specified for PAL renewals in paragraph IV.K.10(ii) of this Ruling, the major stationary source shall submit a proposed allowable emission limitation for each emissions unit (or each group of emissions units, if such a distribution is more appropriate as decided by the reviewing authority) by distributing the PAL allowable emissions for the major stationary source among each of the emissions units that existed under the PAL. If the PAL had not yet been adjusted for an applicable requirement that became effective during the PAL effective period, as required under paragraph IV.K.10(v) of this Ruling, such distribution shall be made as if the PAL had been adjusted.

(*b*) The reviewing authority shall decide whether and how the PAL allowable emissions will be distributed and issue a revised permit incorporating allowable limits for each emissions unit, or each group of emissions units, as the reviewing authority determines is appropriate.

(ii) Each emissions unit(s) shall comply with the allowable emission limitation on a 12-month rolling basis. The reviewing authority may approve the use of monitoring systems (source testing, emission factors, etc.) other than CEMS, CERMS, PEMS or CPMS to demonstrate compliance with the allowable emission limitation.

(iii) Until the reviewing authority issues the revised permit incorporating allowable limits for each emissions unit, or each group of emissions units, as required under paragraph IV.K.9(i)(*a*) of this Ruling, the source shall continue to comply with a source-wide, multi-unit emissions cap equivalent to the level of the PAL emission limitation.

(iv) Any physical change or change in the method of operation at the major stationary source will be subject to the nonattainment major NSR requirements if such change meets the definition of major modification in paragraph II.A.5 of this Ruling.

(v) The major stationary source owner or operator shall continue to comply with any State or Federal applicable requirements (BACT, RACT, NSPS, etc.) that may have

applied either during the PAL effective period or prior to the PAL effective period except for those emission limitations that had been established pursuant to paragraph IV.F of this Ruling, but were eliminated by the PAL in accordance with the provisions in paragraph IV.K.1(iii)(*c*) of this Ruling.

10. Renewal of a PAL.

(i) The reviewing authority shall follow the procedures specified in paragraph IV.K.5 of this Ruling in approving any request to renew a PAL for a major stationary source, and shall provide both the proposed PAL level and a written rationale for the proposed PAL level to the public for review and comment. During such public review, any person may propose a PAL level for the source for consideration by the reviewing authority.

(ii) *Application deadline*. The major stationary source owner or operator shall submit a timely application to the reviewing authority to request renewal of a PAL. A timely application is one that is submitted at least 6 months prior to, but not earlier than 18 months from, the date of permit expiration. This deadline for application submittal is to ensure that the permit will not expire before the permit is renewed. If the owner or operator of a major stationary source submits a complete application to renew the PAL within this time period, then the PAL shall continue to be effective until the revised permit with the renewed PAL is issued.

(iii) *Application requirements*. The application to renew a PAL permit shall contain the information required in paragraphs IV.K.10(iii)(*a*) through (*d*) of this Ruling.

(*a*) The information required in paragraphs IV.K.3(i) through (iii) of this Ruling.

(*b*) A proposed PAL level.

(*c*) The sum of the potential to emit of all emissions units under the PAL (with supporting documentation).

(*d*) Any other information the owner or operator wishes the reviewing authority to consider in determining the appropriate level for renewing the PAL.

(iv) *PAL adjustment*. In determining whether and how to adjust the PAL, the reviewing authority shall consider the options outlined in paragraphs IV.K.10(iv)(*a*) and (*b*) of this Ruling. However, in no case may any such adjustment fail to comply with paragraph IV.K.10(iv)(*c*) of this Ruling.

(*a*) If the emissions level calculated in accordance with paragraph IV.K.6 of this Ruling is equal to or greater than 80 percent of the PAL level, the reviewing authority may renew the PAL at the same level without considering the factors set forth in paragraph IV.K.10(iv)(*b*) of this Ruling; or

(*b*) The reviewing authority may set the PAL at a level that it determines to be more representative of the source's baseline actual emissions, or that it determines to be appropriate considering air quality needs, advances in control technology, anticipated economic growth in the area, desire to reward or encourage the source's voluntary emissions reductions, or other factors as specifically identified by the reviewing authority in its written rationale.

(*c*) Notwithstanding paragraphs IV.K.10(iv)(*a*) and (*b*) of this Ruling,

(*1*) If the potential to emit of the major stationary source is less than the PAL, the reviewing authority shall adjust the PAL to a level no greater than the potential to emit of the source; and

(*2*) The reviewing authority shall not approve a renewed PAL level higher than the current PAL, unless the major stationary source has complied with the provisions of paragraph IV.K.11 of this Ruling (increasing a PAL).

(v) If the compliance date for a State or Federal requirement that applies to the PAL source occurs during the PAL effective period, and if the reviewing authority has not already adjusted for such requirement, the PAL shall be adjusted at the time of PAL permit renewal or title V permit renewal, whichever occurs first.

11. Increasing a PAL during the PAL effective period.

(i) The reviewing authority may increase a PAL emission limitation only if the major stationary source complies with the provisions in paragraphs IV.K.11(i)(*a*) through (*d*) of this Ruling.

(*a*) The owner or operator of the major stationary source shall submit a complete application to request an increase in the PAL limit for a PAL major modification. Such application shall identify the emissions unit(s) contributing to the increase in emissions so as to cause the major stationary source's emissions to equal or exceed its PAL.

(*b*) As part of this application, the major stationary source owner or operator shall demonstrate that the sum of the baseline actual emissions of the small emissions units, plus the sum of the baseline actual emissions of the significant and major emissions units assuming application of BACT equivalent controls, plus the sum of the allowable emissions of the new or modified emissions unit(s) exceeds the PAL. The level of control that would result from BACT equivalent controls on each significant or major emissions unit shall be determined by conducting a new BACT analysis at the time the application is submitted, unless the emissions unit is currently required to comply with a BACT or LAER requirement that was established within the preceding 10 years. In such a case, the assumed control level for that emissions unit shall be equal to the level of BACT or LAER with which that emissions unit must currently comply.

(*c*) The owner or operator obtains a major NSR permit for all emissions unit(s) identified in paragraph IV.K.11(i)(*a*) of this Ruling, regardless of the magnitude of the emissions increase resulting from them (that is, no significant levels apply). These emissions unit(s) shall comply with any emissions requirements resulting from the nonattainment major NSR program process (for example, LAER), even though they have also become subject to the PAL or continue to be subject to the PAL.

(*d*) The PAL permit shall require that the increased PAL level shall be effective on the day any emissions unit that is part of the PAL major modification becomes operational and begins to emit the PAL pollutant.

(ii) The reviewing authority shall calculate the new PAL as the sum of the allowable emissions for each modified or new emissions unit, plus the sum of the baseline actual emissions of the significant and major emissions units (assuming application of BACT equivalent controls as determined in accordance with paragraph IV.K.11(i)(*b*)), plus the sum of the baseline actual emissions of the small emissions units.

(iii) The PAL permit shall be revised to reflect the increased PAL level pursuant to the public notice requirements of paragraph IV.K.5 of this Ruling.

12. Monitoring requirements for PALs.

(i) General Requirements.

(*a*) Each PAL permit must contain enforceable requirements for the monitoring system that accurately determines plantwide emissions of the PAL pollutant in terms of mass per unit of time. Any monitoring system authorized for use in the PAL permit must be based on sound science and meet generally acceptable scientific procedures for data quality and manipulation. Additionally, the information generated by such system must meet minimum legal requirements for admissibility in a judicial proceeding to enforce the PAL permit.

(*b*) The PAL monitoring system must employ one or more of the four general monitoring approaches meeting the minimum requirements set forth in paragraphs IV.K.12(ii)(*a*) through (*d*) of this Ruling and must be approved by the reviewing authority.

(*c*) Notwithstanding paragraph IV.K.12(i)(*b*) of this Ruling, you may also employ an alternative monitoring approach that meets paragraph IV.K.12(i)(*a*) of this Ruling if approved by the reviewing authority.

(*d*) Failure to use a monitoring system that meets the requirements of this Ruling renders the PAL invalid.

(ii) Minimum Performance Requirements for Approved Monitoring Approaches. The following are acceptable general monitoring approaches when conducted in accordance with the minimum requirements in paragraphs IV.K.12(iii) through (ix) of this Ruling:

(*a*) Mass balance calculations for activities using coatings or solvents;

(*b*) CEMS;

(*c*) CPMS or PEMS; and

(*d*) Emission Factors.

(iii) Mass Balance Calculations. An owner or operator using mass balance calculations to monitor PAL pollutant emissions from activities using coating or solvents shall meet the following requirements:

(*a*) Provide a demonstrated means of validating the published content of the PAL pollutant that is contained in or created by all materials used in or at the emissions unit;

(*b*) Assume that the emissions unit emits all of the PAL pollutant that is contained in or created by any raw material or fuel used in or at the emissions unit, if it cannot otherwise be accounted for in the process; and

(*c*) Where the vendor of a material or fuel, which is used in or at the emissions unit, publishes a range of pollutant content from such material, the owner or operator must use the highest value of the range to calculate the PAL pollutant emissions unless the reviewing authority determines there is site-specific data or a site-specific monitoring program to support another content within the range.

(iv) CEMS. An owner or operator using CEMS to monitor PAL pollutant emissions shall meet the following requirements:

(*a*) CEMS must comply with applicable Performance Specifications found in 40 CFR part 60, appendix B; and

(*b*) CEMS must sample, analyze and record data at least every 15 minutes while the emissions unit is operating.

(v) CPMS or PEMS. An owner or operator using CPMS or PEMS to monitor PAL pollutant emissions shall meet the following requirements:

(*a*) The CPMS or the PEMS must be based on current site-specific data demonstrating a correlation between the monitored parameter(s) and the PAL pollutant emissions across the range of operation of the emissions unit; and

(*b*) Each CPMS or PEMS must sample, analyze, and record data at least every 15 minutes, or at another less frequent interval approved by the reviewing authority, while the emissions unit is operating.

(vi) Emission factors. An owner or operator using emission factors to monitor PAL pollutant emissions shall meet the following requirements:

(*a*) All emission factors shall be adjusted, if appropriate, to account for the degree of uncertainty or limitations in the factors' development;

(*b*) The emissions unit shall operate within the designated range of use for the emission factor, if applicable; and

(*c*) If technically practicable, the owner or operator of a significant emissions unit that relies on an emission factor to calculate PAL pollutant emissions shall conduct validation testing to determine a site-specific emission factor within 6 months of PAL permit issuance, unless the reviewing authority determines that testing is not required.

(vii) A source owner or operator must record and report maximum potential emissions without considering enforceable emission limitations or operational restrictions for an emissions unit during any period of time that there is no monitoring data, unless another method for determining emissions during such periods is specified in the PAL permit.

(viii) Notwithstanding the requirements in paragraphs IV.K.12(iii) through (vii) of this Ruling, where an owner or operator of an emissions unit cannot demonstrate a correlation between the monitored parameter(s) and the PAL pollutant emissions rate at all operating points of the emissions unit, the reviewing authority shall, at the time of permit issuance:

(*a*) Establish default value(s) for determining compliance with the PAL based on the highest potential emissions reasonably estimated at such operating point(s); or

(*b*) Determine that operation of the emissions unit during operating conditions when there is no correlation between monitored parameter(s) and the PAL pollutant emissions is a violation of the PAL.

(ix) Re-validation. All data used to establish the PAL pollutant must be re-validated through performance testing or other scientifically valid means approved by the reviewing authority. Such testing must occur at least once every 5 years after issuance of the PAL.

13. Recordkeeping requirements.

(i) The PAL permit shall require an owner or operator to retain a copy of all records necessary to determine compliance with any requirement of paragraph IV.K of this Ruling and of the PAL, including a determination of each emissions unit's 12-month rolling total emissions, for 5 years from the date of such record.

(ii) The PAL permit shall require an owner or operator to retain a copy of the following records for the duration of the PAL effective period plus 5 years:

(*a*) A copy of the PAL permit application and any applications for revisions to the PAL; and

(*b*) Each annual certification of compliance pursuant to title V and the data relied on in certifying the compliance.

14. *Reporting and notification requirements.* The owner or operator shall submit semi-annual monitoring reports and prompt deviation reports to the reviewing authority in accordance with the applicable title V operating permit program. The reports shall meet the requirements in paragraphs IV.K.14(i) through (iii).

(i) Semi-Annual Report. The semi-annual report shall be submitted to the reviewing authority within 30 days of the end of each reporting period. This report shall contain the information required in paragraphs IV.K.14(i)(*a*) through (*g*) of this Ruling.

(*a*) The identification of owner and operator and the permit number.

(*b*) Total annual emissions (tons/year) based on a 12-month rolling total for each month in the reporting period recorded pursuant to paragraph IV.K.13(i) of this Ruling.

(*c*) All data relied upon, including, but not limited to, any Quality Assurance or Quality Control data, in calculating the monthly and annual PAL pollutant emissions.

(*d*) A list of any emissions units modified or added to the major stationary source during the preceding 6-month period.

(*e*) The number, duration, and cause of any deviations or monitoring malfunctions (other than the time associated with zero and span calibration checks), and any corrective action taken.

(*f*) A notification of a shutdown of any monitoring system, whether the shutdown was permanent or temporary, the reason for the shutdown, the anticipated date that the monitoring system will be fully operational or replaced with another monitoring system, and whether the emissions unit monitored by the monitoring system continued to operate, and the calculation of the emissions of the pollutant or the number determined by method included in the permit, as provided by paragraph IV.K.12(vii) of this Ruling.

(*g*) A signed statement by the responsible official (as defined by the applicable title V operating permit program) certifying the truth, accuracy, and completeness of the information provided in the report.

(ii) Deviation report. The major stationary source owner or operator shall promptly submit reports of any deviations or exceedance of the PAL requirements, including periods where no monitoring is available. A report submitted pursuant to §70.6(a)(3)(iii)(B) of this chapter shall satisfy this reporting requirement. The deviation reports shall be submitted within the time limits prescribed by the applicable program implementing §70.6(a)(3)(iii)(B) of this chapter. The reports shall contain the following information:

(*a*) The identification of owner and operator and the permit number;

(*b*) The PAL requirement that experienced the deviation or that was exceeded;

(*c*) Emissions resulting from the deviation or the exceedance; and

(*d*) A signed statement by the responsible official (as defined by the applicable title V operating permit program) certifying the truth, accuracy, and completeness of the information provided in the report.

(iii) Re-validation results. The owner or operator shall submit to the reviewing authority the results of any re-validation test or method within 3 months after completion of such test or method.

15. Transition requirements.

(i) No reviewing authority may issue a PAL that does not comply with the requirements in paragraphs IV.K.1 through 15 of this Ruling after the date that this Ruling becomes effective for the State in which the major stationary source is located.

(ii) The reviewing authority may supersede any PAL which was established prior to the date that this Ruling becomes effective for the State in which the major stationary source is located with a PAL that complies with the requirements of paragraphs IV.K.1 through 15 of this Ruling.

L. *Severability*. If any provision of this Ruling, or the application of such provision to any person or circumstance, is held invalid, the remainder of this Ruling, or the application of such provision to persons or circumstances other than those as to which it is held invalid, shall not be affected thereby.

V. Administrative Procedures

The necessary emission offsets may be proposed either by the owner of the proposed source or by the local community or the State. The emission reduction committed to must be enforceable by authorized State and/or local agencies and under the Clean Air Act, and must be accomplished by the new source's start-up date. If emission reductions are to be obtained in a State that neighbors the State in which the new source is to be located, the emission reductions committed to must be enforceable by the neighboring State and/or local agencies and under the Clean Air Act. Where the new facility is a replacement for a facility that is being shut down in order to provide the necessary offsets, the reviewing authority may allow up to 180 days for shakedown of the new facility before the existing facility is required to cease operation.

A. *Source initiated emission offsets*. A source may propose emission offsets which involve:

(1) Reductions from sources controlled by the source owner (internal emission offsets); and/or (2) reductions from neighboring sources (external emission offsets). The source does not have to investigate all possible emission offsets. As long as the emission offsets obtained represent reasonable progress toward attainment, they will be acceptable. It is the reviewing authority's responsibility to assure that the emission offsets will be as effective as proposed by the source. An internal emission offset will be considered enforceable if it is made a SIP requirement by inclusion as a condition of the new source permit and the permit is forwarded to the appropriate EPA Regional Office.[7] An external emission offset will not be enforceable unless the affected source(s) providing the emission reductions is subject to a new SIP requirement to ensure that its emissions will be reduced by a specified amount in a specified time. Thus, if the source(s) providing the emission reductions does not obtain the necessary reduction, it will be in violation of a SIP requirement and subject to enforcement action by EPA, the State and/or private parties.

The form of the SIP revision may be a State or local regulation, operating permit condition, consent or enforcement order, or any other mechanism available to the State that is enforceable under the Clean Air Act. If a SIP revision is required, the public hearing on the revision may be substituted for the normal public comment procedure required for all major sources under 40 CFR 51.18. The formal publication of the SIP revision approval in the Federal Register need not appear before the source may proceed with construction. To minimize uncertainty that may be caused by these procedures, EPA will, if requested by the State, propose a SIP revision for public comment in the Federal Register concurrently with the State public hearing process. Of course, any major change in the final permit/SIP revision submitted by the State may require a reproposal by EPA.

B. *State or community initiated emission offsets*. A State or community which desires that a source locate in its area may commit to reducing emissions from existing sources (including mobile sources) to sufficiently outweigh the impact of the new source and thus open the way for the new source. As with source-initiated emission offsets, the commitment must be something more than one-for-one. This commitment must be submitted as a SIP revision by the State.

VI. Policy Where Attainment Dates have not Passed

In some cases, the dates for attainment of primary standards specified in the SIP under section 110 have not yet passed due to a delay in the promulgation of a plan under this section of the Act. In addition the Act provides more flexibility with respect to the dates for attainment of secondary NAAQS than for primary standards. Rather than setting specific deadlines, section 110 requires secondary NAAQS to be achieved within a ''reasonable time''. Therefore, in some cases, the date for attainment of secondary standards specified in the SIP under section 110 may also not yet have passed. In such cases,

[7] The emission offset will, therefore, be enforceable by EPA under section 113 as an applicable SIP requirement and will be enforceable by private parties under section 304 as an emission limitation.

a new source locating in an area designated in 40 CFR 81.300 *et seq.* as nonattainment (or, where section III of this Ruling is applicable, a new source that would cause or contribute to a NAAQS violation) may be exempt from the Conditions of section IV.A if the conditions in paragraphs VI.A through C are met.

A. The new source meets the applicable SIP emission limitations.

B. The new source will not interfere with the attainment date specified in the SIP under section 110 of the Act.

C. The Administrator has determined that conditions A and B of this section are satisfied and such determination is published in the FEDERAL REGISTER.

(Secs. 101(b)(1), 110, 160–169, 171–178, and 301(a), Clean Air Act, as amended (42 U.S.C. 7401(b)(1), 7410, 7470–7479, 7501–7508, and 7601(a)); sec. 129(a), Clean Air Act Amendments of 1977 (Pub. L. 95–95, 91 Stat. 685 (Aug., 7, 1977)))

[44 FR 3282, Jan. 16, 1979]

EDITORIAL NOTE: For FEDERAL REGISTER citations affecting appendix S to part 51, see the List of CFR Sections Affected, which appears in the Finding Aids section of the printed volume and at *www.fdsys.gov*.

EFFECTIVE DATE NOTE: At 76 FR 17554, Mar. 30, 2011, part 51, appendix S, paragraph II.A.5 (vii) is stayed indefinitely.

APPENDIXES T–U TO PART 51 [RESERVED]

APPENDIX V TO PART 51—CRITERIA FOR DETERMINING THE COMPLETENESS OF PLAN SUBMISSIONS

1.0. PURPOSE

This appendix V sets forth the minimum criteria for determining whether a State implementation plan submitted for consideration by EPA is an official submission for purposes of review under § 51.103.

1.1 The EPA shall return to the submitting official any plan or revision thereof which fails to meet the criteria set forth in this appendix V, and request corrective action, identifying the component(s) absent or insufficient to perform a review of the submitted plan.

1.2 The EPA shall inform the submitting official whether or not a plan submission meets the requirements of this appendix V within 60 days of EPA's receipt of the submittal, but no later than 6 months after the date by which the State was required to submit the plan or revision. If a completeness determination is not made by 6 months from receipt of a submittal, the submittal shall be deemed complete by operation of law on the date 6 months from receipt. A determination of completeness under this paragraph means that the submission is an official submission for purposes of § 51.103.

2.0. CRITERIA

The following shall be included in plan submissions for review by EPA:

2.1. Administrative Materials

(a) A formal letter of submittal from the Governor or his designee, requesting EPA approval of the plan or revision thereof (hereafter ''the plan'').

(b) Evidence that the State has adopted the plan in the State code or body of regulations; or issued the permit, order, consent agreement (hereafter ''document'') in final form. That evidence shall include the date of adoption or final issuance as well as the effective date of the plan, if different from the adoption/issuance date.

(c) Evidence that the State has the necessary legal authority under State law to adopt and implement the plan.

(d) A copy of the actual regulation, or document submitted for approval and incorporation by reference into the plan, including indication of the changes made (*such as, redline/strikethrough*) to the existing approved plan, where applicable. The submittal shall be a copy of the official State regulation/document signed, stamped and dated by the appropriate State official indicating that it is fully enforceable by the State. The effective date of the regulation/document shall, whenever possible, be indicated in the document itself. *If the State submits an electronic copy, it must be an exact duplicate of the hard copy with changes indicated, signed documents need to be in portable document format, rules need to be in text format and files need to be submitted in manageable amounts (e.g., a file for each section or chapter, depending on size, and separate files for each distinct document) unless otherwise agreed to by the State and Regional Office.*

(e) Evidence that the State followed all of the procedural requirements of the State's laws and constitution in conducting and completing the adoption/issuance of the plan.

(f) Evidence that public notice was given of the proposed change consistent with procedures approved by EPA, including the date of publication of such notice.

(g) Certification that public hearing(s) were held in accordance with the information provided in the public notice and the State's laws and constitution, if applicable and consistent with the public hearing requirements in 40 CFR 51.102.

(h) Compilation of public comments and the State's response thereto.

2.2. Technical Support

(a) Identification of all regulated pollutants affected by the plan.

(b) Identification of the locations of affected sources including the EPA attainment/nonattainment designation of the locations and the status of the attainment plan for the affected areas(s).

(c) Quantification of the changes in plan allowable emissions from the affected sources; estimates of changes in current actual emissions from affected sources or, where appropriate, quantification of changes in actual emissions from affected sources through calculations of the differences between certain baseline levels and allowable emissions anticipated as a result of the revision.

(d) The State's demonstration that the national ambient air quality standards, prevention of significant deterioration increments, reasonable further progress demonstration, and visibility, as applicable, are protected if the plan is approved and implemented. For all requests to redesignate an area to attainment for a national primary ambient air quality standard, under section 107 of the Act, a revision must be submitted to provide for the maintenance of the national primary ambient air quality standards for at least 10 years as required by section 175A of the Act.

(e) Modeling information required to support the proposed revision, including input data, output data, models used, justification of model selections, ambient monitoring data used, meteorological data used, justification for use of offsite data (where used), modes of models used, assumptions, and other information relevant to the determination of adequacy of the modeling analysis.

(f) Evidence, where necessary, that emission limitations are based on continuous emission reduction technology.

(g) Evidence that the plan contains emission limitations, work practice standards and recordkeeping/reporting requirements, where necessary, to ensure emission levels.

(h) Compliance/enforcement strategies, including how compliance will be determined in practice.

(i) Special economic and technological justifications required by any applicable EPA policies, or an explanation of why such justifications are not necessary.

2.3. Exceptions

2.3.1. The EPA, for the purposes of expediting the review of the plan, has adopted a procedure referred to as ''parallel processing.'' Parallel processing allows a State to submit the plan prior to actual adoption by the State and provides an opportunity for the State to consider EPA comments prior to submission of a final plan for final review and action. Under these circumstances, the plan submitted will not be able to meet all of the requirements of paragraph 2.1 (all requirements of paragraph 2.2 will apply). As a result, the following exceptions apply to plans submitted explicitly for parallel processing:

(a) The letter required by paragraph 2.1(a) shall request that EPA propose approval of the proposed plan by parallel processing.

(b) In lieu of paragraph 2.1(b) the State shall submit a schedule for final adoption or issuance of the plan.

(c) In lieu of paragraph 2.1(d) the plan shall include a copy of the proposed/draft regulation or document, including indication of the proposed changes to be made to the existing approved plan, where applicable.

(d) The requirements of paragraphs 2.1(e)–2.1(h) shall not apply to plans submitted for parallel processing.

2.3.2. The exceptions granted in paragraph 2.3.1 shall apply only to EPA's determination of proposed action and all requirements of paragraph 2.1 shall be met prior to publication of EPA's final determination of plan approvability.

[55 FR 5830, Feb. 16, 1990, as amended at 56 FR 42219, Aug. 26, 1991; 56 FR 57288, Nov. 8, 1991; 72 FR 38793, July 16, 2007]

APPENDIX W TO PART 51—GUIDELINE ON AIR QUALITY MODELS

PREFACE

a. Industry and control agencies have long expressed a need for consistency in the application of air quality models for regulatory purposes. In the 1977 Clean Air Act, Congress mandated such consistency and encouraged the standardization of model applications. The *Guideline on Air Quality Models* (hereafter, *Guideline*) was first published in April 1978 to satisfy these requirements by specifying models and providing guidance for their use. The *Guideline* provides a common basis for estimating the air quality concentrations of criteria pollutants used in assessing control strategies and developing emission limits.

b. The continuing development of new air quality models in response to regulatory requirements and the expanded requirements for models to cover even more complex problems have emphasized the need for periodic review and update of guidance on these techniques. Historically, three primary activities have provided direct input to revisions of the *Guideline*. The first is a series of annual EPA workshops conducted for the purpose of ensuring consistency and providing clarification in the application of models. The second activity was the solicitation and review of new models from the technical and user community. In the March 27, 1980 FEDERAL REGISTER, a procedure was outlined for the submittal to EPA of privately developed models. After extensive evaluation and scientific review, these models, as well as those made available by EPA, have been considered for recognition in the *Guideline*. The third activity is the extensive on-going research efforts

by EPA and others in air quality and meteorological modeling.

c. Based primarily on these three activities, new sections and topics have been included as needed. EPA does not make changes to the guidance on a predetermined schedule, but rather on an as-needed basis. EPA believes that revisions of the *Guideline* should be timely and responsive to user needs and should involve public participation to the greatest possible extent. All future changes to the guidance will be proposed and finalized in the FEDERAL REGISTER. Information on the current status of modeling guidance can always be obtained from EPA's Regional Offices.

TABLE OF CONTENTS

List of Tables

1.0 Introduction
2.0 Overview of Model Use
2.1 Suitability of Models
2.2 Levels of Sophistication of Models
2.3 Availability of Models
3.0 Recommended Air Quality Models
3.1 Preferred Modeling Techniques
3.1.1 Discussion
3.1.2 Recommendations
3.2 Use of Alternative Models
3.2.1 Discussion
3.2.2 Recommendations
3.3 Availability of Supplementary Modeling Guidance
4.0 Stationary-Source Models
4.1 Discussion
4.2 Recommendations
4.2.1 Screening Techniques
4.2.1.1 Simple Terrain
4.2.1.2 Complex Terrain
4.2.2 Refined Analytical Techniques
5.0 Models for Ozone, Particulate Matter, Carbon Monoxide, Nitrogen Dioxide, and Lead
5.1 Discussion
5.2 Recommendations
5.2.1 Models for Ozone
5.2.2 Models for Particulate Matter
5.2.2.1 PM–2.5
5.2.2.2 PM–10
5.2.3 Models for Carbon Monoxide
5.2.4 Models for Nitrogen Dioxide (Annual Average)
5.2.5 Models for Lead
6.0 Other Model Requirements
6.1 Discussion
6.2 Recommendations
6.2.1 Visibility
6.2.2 Good Engineering Practice Stack Height
6.2.3 Long Range Transport (LRT) (*i.e.*, beyond 50 km)
6.2.4 Modeling Guidance for Other Governmental Programs
7.0 General Modeling Considerations
7.1 Discussion
7.2 Recommendations
7.2.1 Design Concentrations
7.2.2 Critical Receptor Sites
7.2.3 Dispersion Coefficients
7.2.4 Stability Categories
7.2.5 Plume Rise
7.2.6 Chemical Transformation
7.2.7 Gravitational Settling and Deposition
7.2.8 Complex Winds
7.2.9 Calibration of Models
8.0 Model Input Data
8.1 Source Data
8.1.1 Discussion
8.1.2 Recommendations
8.2 Background Concentrations
8.2.1 Discussion
8.2.2 Recommendations (Isolated Single Source)
8.2.3 Recommendations (Multi-Source Areas)
8.3 Meteorological Input Data
8.3.1 Length of Record of Meteorological Data
8.3.2 National Weather Service Data
8.3.3 Site Specific Data
8.3.4 Treatment of Near-calms and Calms
9.0 Accuracy and Uncertainty of Models
9.1 Discussion
9.1.1 Overview of Model Uncertainty
9.1.2 Studies of Model Accuracy
9.1.3 Use of Uncertainty in Decision-Making
9.1.4 Evaluation of Models
9.2 Recommendations
10.0 Regulatory Application of Models
10.1 Discussion
10.2 Recommendations
10.2.1 Analysis Requirements
10.2.2 Use of Measured Data in Lieu of Model Estimates
10.2.3 Emission Limits
11.0 Bibliography
12.0 References
Appendix A to Appendix W of 40 CFR Part 51—Summaries of Preferred Air Quality Models

LIST OF TABLES

Table No.	Title
4–1a	Neutral/Stable Meteorological Matrix for CTSCREEN.
4–1b	Unstable/Convective Meteorological Matrix for CTSCREEN.
8–1	Model Emission Input Data for Point Sources.
8–2	Point Source Model Emission Input Data for NAAQS Compliance in PSD Demonstrations.
8–3	Averaging Times for Site Specific Wind and Turbulence Measurements.

1.0 INTRODUCTION

a. The *Guideline* recommends air quality modeling techniques that should be applied to State Implementation Plan (SIP) revisions for existing sources and to new source

reviews (NSR), including prevention of significant deterioration (PSD).[1 2 3] Applicable only to criteria air pollutants, it is intended for use by EPA Regional Offices in judging the adequacy of modeling analyses performed by EPA, State and local agencies and by industry. The guidance is appropriate for use by other Federal agencies and by State agencies with air quality and land management responsibilities. The *Guideline* serves to identify, for all interested parties, those techniques and data bases EPA considers acceptable. The *Guideline* is not intended to be a compendium of modeling techniques. Rather, it should serve as a common measure of acceptable technical analysis when supported by sound scientific judgment.

b. Due to limitations in the spatial and temporal coverage of air quality measurements, monitoring data normally are not sufficient as the sole basis for demonstrating the adequacy of emission limits for existing sources. Also, the impacts of new sources that do not yet exist can only be determined through modeling. Thus, models, while uniquely filling one program need, have become a primary analytical tool in most air quality assessments. Air quality measurements can be used in a complementary manner to dispersion models, with due regard for the strengths and weaknesses of both analysis techniques. Measurements are particularly useful in assessing the accuracy of model estimates. The use of air quality measurements alone however could be preferable, as detailed in a later section of this document, when models are found to be unacceptable and monitoring data with sufficient spatial and temporal coverage are available.

c. It would be advantageous to categorize the various regulatory programs and to apply a designated model to each proposed source needing analysis under a given program. However, the diversity of the nation's topography and climate, and variations in source configurations and operating characteristics dictate against a strict modeling ''cookbook''. There is no one model capable of properly addressing all conceivable situations even within a broad category such as point sources. Meteorological phenomena associated with threats to air quality standards are rarely amenable to a single mathematical treatment; thus, case-by-case analysis and judgment are frequently required. As modeling efforts become more complex, it is increasingly important that they be directed by highly competent individuals with a broad range of experience and knowledge in air quality meteorology. Further, they should be coordinated closely with specialists in emissions characteristics, air monitoring and data processing. The judgment of experienced meteorologists and analysts is essential.

d. The model that most accurately estimates concentrations in the area of interest is always sought. However, it is clear from the needs expressed by the States and EPA Regional Offices, by many industries and trade associations, and also by the deliberations of Congress, that consistency in the selection and application of models and data bases should also be sought, even in case-by-case analyses. Consistency ensures that air quality control agencies and the general public have a common basis for estimating pollutant concentrations, assessing control strategies and specifying emission limits. Such consistency is not, however, promoted at the expense of model and data base accuracy. The *Guideline* provides a consistent basis for selection of the most accurate models and data bases for use in air quality assessments.

e. Recommendations are made in the *Guideline* concerning air quality models, data bases, requirements for concentration estimates, the use of measured data in lieu of model estimates, and model evaluation procedures. Models are identified for some specific applications. The guidance provided here should be followed in air quality analyses relative to State Implementation Plans and in supporting analyses required by EPA, State and local agency air programs. EPA may approve the use of another technique that can be demonstrated to be more appropriate than those recommended in this guide. This is discussed at greater length in Section 3. In all cases, the model applied to a given situation should be the one that provides the most accurate representation of atmospheric transport, dispersion, and chemical transformations in the area of interest. However, to ensure consistency, deviations from this guide should be carefully documented and fully supported.

f. From time to time situations arise requiring clarification of the intent of the guidance on a specific topic. Periodic workshops are held with the headquarters, Regional Office, State, and local agency modeling representatives to ensure consistency in modeling guidance and to promote the use of more accurate air quality models and data bases. The workshops serve to provide further explanations of *Guideline* requirements to the Regional Offices and workshop reports are issued with this clarifying information. In addition, findings from ongoing research programs, new model development, or results from model evaluations and applications are continuously evaluated. Based on this information changes in the guidance may be indicated.

g. All changes to the *Guideline* must follow rulemaking requirements since the *Guideline* is codified in Appendix W of Part 51. EPA will promulgate proposed and final rules in the FEDERAL REGISTER to amend this Appendix. Ample opportunity for public comment

will be provided for each proposed change and public hearings scheduled if requested.

h. A wide range of topics on modeling and data bases are discussed in the *Guideline*. Section 2 gives an overview of models and their appropriate use. Section 3 provides specific guidance on the use of ''preferred'' air quality models and on the selection of alternative techniques. Sections 4 through 7 provide recommendations on modeling techniques for application to simple-terrain stationary source problems, complex terrain problems, and mobile source problems. Specific modeling requirements for selected regulatory issues are also addressed. Section 8 discusses issues common to many modeling analyses, including acceptable model components. Section 9 makes recommendations for data inputs to models including source, meteorological and background air quality data. Section 10 covers the uncertainty in model estimates and how that information can be useful to the regulatory decision-maker. The last chapter summarizes how estimates and measurements of air quality are used in assessing source impact and in evaluating control strategies.

i. Appendix W to 40 CFR Part 51 itself contains an appendix: Appendix A. Thus, when reference is made to ''Appendix A'' in this document, it refers to Appendix A to Appendix W to 40 CFR Part 51. Appendix A contains summaries of refined air quality models that are ''preferred'' for specific applications; both EPA models and models developed by others are included.

2.0 Overview of Model Use

a. Before attempting to implement the guidance contained in this document, the reader should be aware of certain general information concerning air quality models and their use. Such information is provided in this section.

2.1 Suitability of Models

a. The extent to which a specific air quality model is suitable for the evaluation of source impact depends upon several factors. These include: (1) The meteorological and topographic complexities of the area; (2) the level of detail and accuracy needed for the analysis; (3) the technical competence of those undertaking such simulation modeling; (4) the resources available; and (5) the detail and accuracy of the data base, *i.e.*, emissions inventory, meteorological data, and air quality data. Appropriate data should be available before any attempt is made to apply a model. A model that requires detailed, precise, input data should not be used when such data are unavailable. However, assuming the data are adequate, the greater the detail with which a model considers the spatial and temporal variations in emissions and meteorological conditions, the greater the ability to evaluate the source impact and to distinguish the effects of various control strategies.

b. Air quality models have been applied with the most accuracy, or the least degree of uncertainty, to simulations of long term averages in areas with relatively simple topography. Areas subject to major topographic influences experience meteorological complexities that are extremely difficult to simulate. Although models are available for such circumstances, they are frequently site specific and resource intensive. In the absence of a model capable of simulating such complexities, only a preliminary approximation may be feasible until such time as better models and data bases become available.

c. Models are highly specialized tools. Competent and experienced personnel are an essential prerequisite to the successful application of simulation models. The need for specialists is critical when the more sophisticated models are used or the area being investigated has complicated meteorological or topographic features. A model applied improperly, or with inappropriate data, can lead to serious misjudgements regarding the source impact or the effectiveness of a control strategy.

d. The resource demands generated by use of air quality models vary widely depending on the specific application. The resources required depend on the nature of the model and its complexity, the detail of the data base, the difficulty of the application, and the amount and level of expertise required. The costs of manpower and computational facilities may also be important factors in the selection and use of a model for a specific analysis. However, it should be recognized that under some sets of physical circumstances and accuracy requirements, no present model may be appropriate. Thus, consideration of these factors should lead to selection of an appropriate model.

2.2 Levels of Sophistication of Models

a. There are two levels of sophistication of models. The first level consists of relatively simple estimation techniques that generally use preset, worst-case meteorological conditions to provide conservative estimates of the air quality impact of a specific source, or source category. These are called screening techniques or screening models. The purpose of such techniques is to eliminate the need of more detailed modeling for those sources that clearly will not cause or contribute to ambient concentrations in excess of either the National Ambient Air Quality Standards (NAAQS)[4] or the allowable prevention of significant deterioration (PSD) concentration increments.[2 3] If a screening technique indicates that the concentration contributed by the source exceeds the PSD increment or the increment remaining to just meet the

NAAQS, then the second level of more sophisticated models should be applied.

b. The second level consists of those analytical techniques that provide more detailed treatment of physical and chemical atmospheric processes, require more detailed and precise input data, and provide more specialized concentration estimates. As a result they provide a more refined and, at least theoretically, a more accurate estimate of source impact and the effectiveness of control strategies. These are referred to as refined models.

c. The use of screening techniques followed, as appropriate, by a more refined analysis is always desirable. However there are situations where the screening techniques are practically and technically the only viable option for estimating source impact. In such cases, an attempt should be made to acquire or improve the necessary data bases and to develop appropriate analytical techniques.

2.3 Availability of Models

a. For most of the screening and refined models discussed in the *Guideline*, codes, associated documentation and other useful information are available for download from EPA's Support Center for Regulatory Air Modeling (SCRAM) Internet Web site at *http://www.epa.gov/scram001*. A list of alternate models that can be used with case-by-case justification (subsection 3.2) and an example air quality analysis checklist are also posted on this Web site. This is a site with which modelers should become familiar.

3.0 Recommended Air Quality Models

a. This section recommends the approach to be taken in determining refined modeling techniques for use in regulatory air quality programs. The status of models developed by EPA, as well as those submitted to EPA for review and possible inclusion in this guidance, is discussed. The section also addresses the selection of models for individual cases and provides recommendations for situations where the preferred models are not applicable. Two additional sources of modeling guidance are the Model Clearinghouse[5] and periodic Regional/State/Local Modelers workshops.

b. In this guidance, when approval is required for a particular modeling technique or analytical procedure, we often refer to the *''appropriate reviewing authority''*. In some EPA regions, authority for NSR and PSD permitting and related activities has been delegated to State and even local agencies. In these cases, such agencies are *''representatives''* of the respective regions. Even in these circumstances, the Regional Office retains the ultimate authority in decisions and approvals. Therefore, as discussed above and depending on the circumstances, the appropriate reviewing authority may be the Regional Office, Federal Land Manager(s), State agency(ies), or perhaps local agency(ies). In cases where review and approval comes solely from the Regional Office (sometimes stated as *''Regional Administrator''*), this will be stipulated. If there is any question as to the appropriate reviewing authority, you should contact the Regional modeling contact (*http://www.epa.gov/scram001/tt28.htm#regionalmodelingcontacts*) in the appropriate EPA Regional Office, whose jurisdiction generally includes the physical location of the source in question and its expected impacts.

c. In all regulatory analyses, especially if other-than-preferred models are selected for use, early discussions among Regional Office staff, State and local control agencies, industry representatives, and where appropriate, the Federal Land Manager, are invaluable and are encouraged. Agreement on the data base(s) to be used, modeling techniques to be applied and the overall technical approach, prior to the actual analyses, helps avoid misunderstandings concerning the final results and may reduce the later need for additional analyses. The use of an air quality analysis checklist, such as is posted on EPA's Internet SCRAM Web site (subsection 2.3), and the preparation of a written protocol help to keep misunderstandings at a minimum.

d. It should not be construed that the preferred models identified here are to be permanently used to the exclusion of all others or that they are the only models available for relating emissions to air quality. The model that most accurately estimates concentrations in the area of interest is always sought. However, designation of specific models is needed to promote consistency in model selection and application.

e. The 1980 solicitation of new or different models from the technical community[6] and the program whereby these models were evaluated, established a means by which new models are identified, reviewed and made available in the *Guideline*. There is a pressing need for the development of models for a wide range of regulatory applications. Refined models that more realistically simulate the physical and chemical process in the atmosphere and that more reliably estimate pollutant concentrations are needed.

3.1 Preferred Modeling Techniques

3.1.1 Discussion

a. EPA has developed models suitable for regulatory application. Other models have been submitted by private developers for possible inclusion in the *Guideline*. Refined models which are preferred and recommended by EPA have undergone evaluation exercises[7 8 9 10] that include statistical

measures of model performance in comparison with measured air quality data as suggested by the American Meteorological Society[11] and, where possible, peer scientific reviews.[12 13 14]

b. When a single model is found to perform better than others, it is recommended for application as a preferred model and listed in Appendix A. If no one model is found to clearly perform better through the evaluation exercise, then the preferred model listed in Appendix A may be selected on the basis of other factors such as past use, public familiarity, cost or resource requirements, and availability. Accordingly, dispersion models listed in Appendix A meet these conditions:

i. The model must be written in a common programming language, and the executable(s) must run on a common computer platform.

ii. The model must be documented in a user's guide which identifies the mathematics of the model, data requirements and program operating characteristics at a level of detail comparable to that available for other recommended models in Appendix A.

iii. The model must be accompanied by a complete test data set including input parameters and output results. The test data must be packaged with the model in computer-readable form.

iv. The model must be useful to typical users, e.g., State air pollution control agencies, for specific air quality control problems. Such users should be able to operate the computer program(s) from available documentation.

v. The model documentation must include a comparison with air quality data (and/or tracer measurements) or with other well-established analytical techniques.

vi. The developer must be willing to make the model and source code available to users at reasonable cost or make them available for public access through the Internet or National Technical Information Service: The model and its code cannot be proprietary.

c. The evaluation process includes a determination of technical merit, in accordance with the above six items including the practicality of the model for use in ongoing regulatory programs. Each model will also be subjected to a performance evaluation for an appropriate data base and to a peer scientific review. Models for wide use (not just an isolated case) that are found to perform better will be proposed for inclusion as preferred models in future *Guideline* revisions.

d. No further evaluation of a preferred model is required for a particular application if the EPA recommendations for regulatory use specified for the model in the *Guideline* are followed. Alternative models to those listed in Appendix A should generally be compared with measured air quality data when they are used for regulatory applications consistent with recommendations in subsection 3.2.

3.1.2 Recommendations

a. Appendix A identifies refined models that are preferred for use in regulatory applications. If a model is required for a particular application, the user should select a model from that appendix. These models may be used without a formal demonstration of applicability as long as they are used as indicated in each model summary of Appendix A. Further recommendations for the application of these models to specific source problems are found in subsequent sections of the *Guideline*.

b. If changes are made to a preferred model without affecting the concentration estimates, the preferred status of the model is unchanged. Examples of modifications that do not affect concentrations are those made to enable use of a different computer platform or those that affect only the format or averaging time of the model results. However, when any changes are made, the Regional Administrator should require a test case example to demonstrate that the concentration estimates are not affected.

c. A preferred model should be operated with the options listed in Appendix A as ''Recommendations for Regulatory Use.'' If other options are exercised, the model is no longer ''preferred.'' Any other modification to a preferred model that would result in a change in the concentration estimates likewise alters its status as a preferred model. Use of the model must then be justified on a case-by-case basis.

3.2 Use of Alternative Models

3.2.1 Discussion

a. Selection of the best techniques for each individual air quality analysis is always encouraged, but the selection should be done in a consistent manner. A simple listing of models in this *Guideline* cannot alone achieve that consistency nor can it necessarily provide the best model for all possible situations. An EPA reference[15] provides a statistical technique for evaluating model performance for predicting peak concentration values, as might be observed at individual monitoring locations. This protocol is available to assist in developing a consistent approach when justifying the use of other-than-preferred modeling techniques recommended in the *Guideline*. The procedures in this protocol provide a general framework for objective decision-making on the acceptability of an alternative model for a given regulatory application. These objective procedures may be used for conducting both the technical evaluation of the model and the field test or performance evaluation. An

ASTM reference[16] provides a general philosophy for developing and implementing advanced statistical evaluations of atmospheric dispersion models, and provides an example statistical technique to illustrate the application of this philosophy.

b. This section discusses the use of alternate modeling techniques and defines three situations when alternative models may be used.

3.2.2 Recommendations

a. Determination of acceptability of a model is a Regional Office responsibility. Where the Regional Administrator finds that an alternative model is more appropriate than a preferred model, that model may be used subject to the recommendations of this subsection. This finding will normally result from a determination that (1) a preferred air quality model is not appropriate for the particular application; or (2) a more appropriate model or analytical procedure is available and applicable.

b. An alternative model should be evaluated from both a theoretical and a performance perspective before it is selected for use. There are three separate conditions under which such a model may normally be approved for use: (1) If a demonstration can be made that the model produces concentration estimates equivalent to the estimates obtained using a preferred model; (2) if a statistical performance evaluation has been conducted using measured air quality data and the results of that evaluation indicate the alternative model performs better for the given application than a comparable model in Appendix A; or (3) if the preferred model is less appropriate for the specific application, or there is no preferred model. Any one of these three separate conditions may make use of an alternative model acceptable. Some known alternative models that are applicable for selected situations are listed on EPA's SCRAM Internet Web site (subsection 2.3). However, inclusion there does not confer any unique status relative to other alternative models that are being or will be developed in the future.

c. Equivalency, condition (1) in paragraph (b) of this subsection, is established by demonstrating that the maximum or highest, second highest concentrations are within 2 percent of the estimates obtained from the preferred model. The option to show equivalency is intended as a simple demonstration of acceptability for an alternative model that is so nearly identical (or contains options that can make it identical) to a preferred model that it can be treated for practical purposes as the preferred model. Two percent was selected as the basis for equivalency since it is a rough approximation of the fraction that PSD Class I increments are of the NAAQS for SO_2, i.e., the difference in concentrations that is judged to be significant. However, notwithstanding this demonstration, models that are not equivalent may be used when one of the two other conditions described in paragraphs (d) and (e) of this subsection are satisfied.

d. For condition (2) in paragraph (b) of this subsection, established procedures and techniques[15 16] for determining the acceptability of a model for an individual case based on superior performance should be followed, as appropriate. Preparation and implementation of an evaluation protocol which is acceptable to both control agencies and regulated industry is an important element in such an evaluation.

e. Finally, for condition (3) in paragraph (b) of this subsection, an alternative refined model may be used provided that:

i. The model has received a scientific peer review;

ii. The model can be demonstrated to be applicable to the problem on a theoretical basis;

iii. The data bases which are necessary to perform the analysis are available and adequate;

iv. Appropriate performance evaluations of the model have shown that the model is not biased toward underestimates; and

v. A protocol on methods and procedures to be followed has been established.

3.3 Availability of Supplementary Modeling Guidance

a. The Regional Administrator has the authority to select models that are appropriate for use in a given situation. However, there is a need for assistance and guidance in the selection process so that fairness and consistency in modeling decisions is fostered among the various Regional Offices and the States. To satisfy that need, EPA established the Model Clearinghouse[5] and also holds periodic workshops with headquarters, Regional Office, State, and local agency modeling representatives.

b. The Regional Office should always be consulted for information and guidance concerning modeling methods and interpretations of modeling guidance, and to ensure that the air quality model user has available the latest most up-to-date policy and procedures. As appropriate, the Regional Office may request assistance from the Model Clearinghouse after an initial evaluation and decision has been reached concerning the application of a model, analytical technique or data base in a particular regulatory action.

4.0 TRADITIONAL STATIONARY SOURCE MODELS

4.1 Discussion

a. Guidance in this section applies to modeling analyses for which the predominant meteorological conditions that control the design concentration are steady state and for

which the transport distances are nominally 50km or less. The models recommended in this section are generally used in the air quality impact analysis of stationary sources for most criteria pollutants. The averaging time of the concentration estimates produced by these models ranges from 1 hour to an annual average.

b. Simple terrain, as used here, is considered to be an area where terrain features are all lower in elevation than the top of the stack of the source(s) in question. Complex terrain is defined as terrain exceeding the height of the stack being modeled.

c. In the early 1980s, model evaluation exercises were conducted to determine the ''best, most appropriate point source model'' for use in simple terrain.[12] No one model was found to be clearly superior and, based on past use, public familiarity, and availability, ISC (predecessor to ISC3[17]) became the recommended model for a wide range of regulatory applications. Other refined models which also employed the same basic Gaussian kernel as in ISC, i.e., BLP, CALINE3 and OCD, were developed for specialized applications (Appendix A). Performance evaluations were also made for these models, which are identified below.

d. Encouraged by the development of pragmatic methods for better characterization of plume dispersion[18 19 20 21] the AMS/EPA Regulatory Model Improvement Committee (AERMIC) developed AERMOD.[22] AERMOD employs best state-of-practice parameterizations for characterizing the meteorological influences and dispersion. The model utilizes a probability density function (pdf) and the superposition of several Gaussian plumes to characterize the distinctly non-Gaussian nature of the vertical pollutant distribution for elevated plumes during convective conditions; otherwise the distribution is Gaussian. Also, nighttime urban boundary layers (and plumes within them) have the turbulence enhanced by AERMOD to simulate the influence of the urban heat island. AERMOD has been evaluated using a variety of data sets and has been found to perform better than ISC3 for many applications, and as well or better than CTDMPLUS for several complex terrain data sets (Section A.1; subsection n). The current version of AERMOD has been modified to include an algorithm for dry and wet deposition for both gases and particles. Note that when deposition is invoked, mass in the plume is depleted. Availability of this version is described in Section A.1, and is subject to applicable guidance published in the *Guideline*.

e. A new building downwash algorithm[23] was developed and tested within AERMOD. The PRIME algorithm has been evaluated using a variety of data sets and has been found to perform better than the downwash algorithm that is in ISC3, and has been shown to perform acceptably in tests within AERMOD (Section A.1; subsection n).

4.2 Recommendations

4.2.1 Screening Techniques

4.2.1.1 Simple Terrain

a. Where a preliminary or conservative estimate is desired, point source screening techniques are an acceptable approach to air quality analyses. EPA has published guidance for screening procedures.[24 25]

b. All screening procedures should be adjusted to the site and problem at hand. Close attention should be paid to whether the area should be classified urban or rural in accordance with Section 7.2.3. The climatology of the area should be studied to help define the worst-case meteorological conditions. Agreement should be reached between the model user and the appropriate reviewing authority on the choice of the screening model for each analysis, and on the input data as well as the ultimate use of the results.

4.2.1.2 Complex Terrain

a. CTSCREEN[26] can be used to obtain conservative, yet realistic, worst-case estimates for receptors located on terrain above stack height. CTSCREEN accounts for the three-dimensional nature of plume and terrain interaction and requires detailed terrain data representative of the modeling domain. The model description and user's instructions are contained in the user's guide.[26] The terrain data must be digitized in the same manner as for CTDMPLUS and a terrain processor is available.[27] A discussion of the model's performance characteristics is provided in a technical paper.[28] CTSCREEN is designed to execute a fixed matrix of meteorological values for wind speed (u), standard deviation of horizontal and vertical wind speeds (σ_v, σ_w), vertical potential temperature gradient ($d\theta/dz$), friction velocity (u_*), Monin-Obukhov length (L), mixing height (z_i) as a function of terrain height, and wind directions for both neutral/stable conditions and unstable convective conditions. Table 4–1 contains the matrix of meteorological variables that is used for each CTSCREEN analysis. There are 96 combinations, including exceptions, for each wind direction for the neutral/stable case, and 108 combinations for the unstable case. The specification of wind direction, however, is handled internally, based on the source and terrain geometry. Although CTSCREEN is designed to address a single source scenario, there are a number of options that can be selected on a case-by-case basis to address multi-source situations. However, the appropriate reviewing authority should be consulted, and concurrence obtained, on the protocol for modeling multiple sources with CTSCREEN to ensure that the worst case is identified and assessed. The

maximum concentration output from CTSCREEN represents a worst-case 1-hour concentration. Time-scaling factors of 0.7 for 3-hour, 0.15 for 24-hour and 0.03 for annual concentration averages are applied internally by CTSCREEN to the highest 1-hour concentration calculated by the model.

b. Placement of receptors requires very careful attention when modeling in complex terrain. Often the highest concentrations are predicted to occur under very stable conditions, when the plume is near, or impinges on, the terrain. The plume under such conditions may be quite narrow in the vertical, so that even relatively small changes in a receptor's location may substantially affect the predicted concentration. Receptors within about a kilometer of the source may be even more sensitive to location. Thus, a dense array of receptors may be required in some cases. In order to avoid excessively large computer runs due to such a large array of receptors, it is often desirable to model the area twice. The first model run would use a moderate number of receptors carefully located over the area of interest. The second model run would use a more dense array of receptors in areas showing potential for high concentrations, as indicated by the results of the first model run.

c. As mentioned above, digitized contour data must be preprocessed[27] to provide hill shape parameters in suitable input format. The user then supplies receptors either through an interactive program that is part of the model or directly, by using a text editor; using both methods to select receptors will generally be necessary to assure that the maximum concentrations are estimated by either model. In cases where a terrain feature may ''appear to the plume'' as smaller, multiple hills, it may be necessary to model the terrain both as a single feature and as multiple hills to determine design concentrations.

d. Other screening techniques[17 25 29] may be acceptable for complex terrain cases where established procedures are used. The user is encouraged to confer with the appropriate reviewing authority if any unresolvable problems are encountered, e.g., applicability, meteorological data, receptor siting, or terrain contour processing issues.

4.2.2 Refined Analytical Techniques

a. A brief description of each preferred model for refined applications is found in Appendix A. Also listed in that appendix are availability, the model input requirements, the standard options that should be selected when running the program, and output options.

b. For a wide range of regulatory applications in all types of terrain, the recommended model is AERMOD. This recommendation is based on extensive developmental and performance evaluation (Section A.1; subsection n). Differentiation of simple versus complex terrain is unnecessary with AERMOD. In complex terrain, AERMOD employs the well-known dividing-streamline concept in a simplified simulation of the effects of plume-terrain interactions.

c. If aerodynamic building downwash is important for the modeling analysis, e.g., paragraph 6.2.2(b), then the recommended model is AERMOD. The state-of-the-science for modeling atmospheric deposition is evolving and the best techniques are currently being assessed and their results are being compared with observations. Consequently, while deposition treatment is available in AERMOD, the approach taken for any purpose should be coordinated with the appropriate reviewing authority. Line sources can be simulated with AERMOD if point or volume sources are appropriately combined. If buoyant plume rise from line sources is important for the modeling analysis, the recommended model is BLP. For other special modeling applications, CALINE3 (or CAL3QHCR on a case-by-case basis), OCD, and EDMS are available as described in Sections 5 and 6.

d. If the modeling application involves a well defined hill or ridge and a detailed dispersion analysis of the spatial pattern of plume impacts is of interest, CTDMPLUS, listed in Appendix A, is available. CDTMPLUS provides greater resolution of concentrations about the contour of the hill feature than does AERMOD through a different plume-terrain interaction algorithm.

TABLE 4–1A—NEUTRAL/STABLE METEOROLOGICAL MATRIX FOR CTSCREEN

Variable	Specific values				
U (m/s)	1.0	2.0	3.0	4.0	5.0
σ_v (m/s)	0.3	0.75			
σ_w (m/s)	0.08	0.15	0.30	0.75	
$\Delta\theta/\Delta z$ (K/m)	0.01	0.02	0.035		
WD	(Wind direction is optimized internally for each meteorological combination.)				

Exceptions:

(1) If U ≤2 m/s and σ_v ≤0.3 m/s, then include σ_w = 0.04 m/s.

(2) If σ_w = 0.75 m/s and U ≥3.0 m/s, then $\Delta\theta/\Delta z$ is limited to ≤0.01 K/m.

(3) If U ≥4 m/s, then σ_w ≥0.15 m/s.

(4) $\sigma_w \leq \sigma_v$

TABLE 4–1B—UNSTABLE/CONVECTIVE METEOROLOGICAL MATRIX FOR CTSCREEN

Variable	Specific values				
U (m/s)	1.0	2.0	3.0	4.0	5.0
U_* (m/s)	0.1	0.3	0.5		
L (m)	−10	−50	−90		
$\Delta\theta/\Delta z$ (K/m)	0.030	(potential temperature gradient above Z_i)			
Z_i (m)	0.5h	1.0h	1.5h	(h = terrain height)	

5.0 MODELS FOR OZONE, PARTICULATE MATTER, CARBON MONOXIDE, NITROGEN DIOXIDE, AND LEAD

5.1 Discussion

a. This section identifies modeling approaches or models appropriate for addressing ozone (O_3)[a], carbon monoxide (CO), nitrogen dioxide (NO_2), particulates (PM–2.5[a] and PM–10), and lead. These pollutants are often associated with emissions from numerous sources. Generally, mobile sources contribute significantly to emissions of these pollutants or their precursors. For cases where it is of interest to estimate concentrations of CO or NO_2 near a single or small group of stationary sources, refer to Section 4. (Modeling approaches for SO_2 are discussed in Section 4.)

b. Several of the pollutants mentioned in the preceding paragraph are closely related to each other in that they share common sources of emissions and/or are subject to chemical transformations of similar precursors.[30 31] For example, strategies designed to reduce ozone could have an effect on the secondary component of PM–2.5 and vice versa. Thus, it makes sense to use models which take into account the chemical coupling between O_3 and PM–2.5, when feasible. This should promote consistency among methods used to evaluate strategies for reducing different pollutants as well as consistency among the strategies themselves. Regulatory requirements for the different pollutants are likely to be due at different times. Thus, the following paragraphs identify appropriate modeling approaches for pollutants individually.

c. The NAAQS for ozone was revised on July 18, 1997 and is now based on an 8-hour averaging period. Models for ozone are needed primarily to guide choice of strategies to correct an observed ozone problem in an area not attaining the NAAQS for ozone. Use of photochemical grid models is the recommended means for identifying strategies needed to correct high ozone concentrations in such areas. Such models need to consider emissions of volatile organic compounds (VOC), nitrogen oxides (NO_X) and carbon monoxide (CO), as well as means for generating meteorological data governing transport and dispersion of ozone and its precursors. Other approaches, such as Lagrangian or observational models may be used to guide choice of appropriate strategies to consider with a photochemical grid model. These other approaches may be sufficient to address ozone in an area where observed concentrations are near the NAAQS or only slightly above it. Such a decision needs to be made on a case-by-case basis in concert with the Regional Office.

d. A control agency with jurisdiction over one or more areas with significant ozone problems should review available ambient air quality data to assess whether the problem is likely to be significantly impacted by regional transport.[32] Choice of a modeling approach depends on the outcome of this review. In cases where transport is considered significant, use of a nested regional model may be the preferred approach. If the observed problem is believed to be primarily of local origin, use of a model with a single horizontal grid resolution and geographical coverage that is less than that of a regional model may suffice.

e. The fine particulate matter NAAQS, promulgated on July 18, 1997, includes particles with an aerodynamic diameter nominally less than or equal to 2.5 micrometers (PM–2.5). Models for PM–2.5 are needed to assess adequacy of a proposed strategy for meeting annual and/or 24-hour NAAQS for PM–2.5.

[a] Modeling for attainment demonstrations for O_3 and PM–2.5 should be conducted in time to meet required SIP submission dates as provided for in the respective implementation rules. Information on implementation of the 8-hr O_3 and PM–2.5 standards is available at: *http://www.epa.gov/ttn/naags/*.

PM–2.5 is a mixture consisting of several diverse components. Because chemical/physical properties and origins of each component differ, it may be appropriate to use either a single model capable of addressing several of the important components or to model primary and secondary components using different models. Effects of a control strategy on PM–2.5 is estimated from the sum of the effects on the components composing PM–2.5. Model users may refer to guidance[33] for further details concerning appropriate modeling approaches.

f. A control agency with jurisdiction over one or more areas with PM–2.5 problems should review available ambient air quality data to assess which components of PM–2.5 are likely to be major contributors to the problem. If it is determined that regional transport of secondary particulates, such as sulfates or nitrates, is likely to contribute significantly to the problem, use of a regional model may be the preferred approach. Otherwise, coverage may be limited to a domain that is urban scale or less. Special care should be taken to select appropriate geographical coverage for a modeling application.[33]

g. The NAAQS for PM–10 was promulgated in July 1987 (40 CFR 50.6). A SIP development guide[34] is available to assist in PM–10 analyses and control strategy development. EPA promulgated regulations for PSD increments measured as PM–10 in a notice published on June 3, 1993 (40 CFR 51.166(c)). As an aid to assessing the impact on ambient air quality of particulate matter generated from prescribed burning activities, a reference[35] is available.

h. Models for assessing the impacts of particulate matter may involve dispersion models or receptor models, or a combination (depending on the circumstances). Receptor models focus on the behavior of the ambient environment at the point of impact as opposed to source-oriented dispersion models, which focus on the transport, diffusion, and transformation that begin at the source and continue to the receptor site. Receptor models attempt to identify and apportion sources by relating known sample compositions at receptors to measured or inferred compositions of source emissions. When complete and accurate emission inventories or meteorological characterization are unavailable, or unknown pollutant sources exist, receptor modeling may be necessary.

i. Models for assessing the impact of CO emissions are needed for a number of different purposes. Examples include evaluating effects of point sources, congested intersections and highways, as well as the cumulative effect of numerous sources of CO in an urban area.

j. Models for assessing the impact of sources on ambient NO_2 concentrations are primarily needed to meet new source review requirements, such as addressing the effect of a proposed source on PSD increments for annual concentrations of NO_2. Impact of an individual source on ambient NO_2 depends, in part, on the chemical environment into which the source's plume is to be emitted. There are several approaches for estimating effects of an individual source on ambient NO_2. One approach is through use of a plume-in-grid algorithm imbedded within a photochemical grid model. However, because of the rigor and complexity involved, and because this approach may not be capable of defining sub-grid concentration gradients, the plume-in-grid approach may be impractical for estimating effects on an annual PSD increment. A second approach which does not have this limitation and accommodates distance-dependent conversion ratios—the Plume Volume Molar Ratio Method (PVMRM)[36]—is currently being tested to determine suitability as a refined method. A third (screening) approach is to develop site specific (domain-wide) conversion factors based on measurements. If it is not possible to develop site specific conversion factors and use of the plume-in-grid algorithm is also not feasible, other screening procedures may be considered.

k. In January 1999 (40 CFR Part 58, Appendix D), EPA gave notice that concern about ambient lead impacts was being shifted away from roadways and toward a focus on stationary point sources. EPA has also issued guidance on siting ambient monitors in the vicinity of such sources.[37] For lead, the SIP should contain an air quality analysis to determine the maximum quarterly lead concentration resulting from major lead point sources, such as smelters, gasoline additive plants, etc. General guidance for lead SIP development is also available.[38]

5.2 Recommendations

5.2.1 Models for Ozone

a. *Choice of Models for Multi-source Applications.* Simulation of ozone formation and transport is a highly complex and resource intensive exercise. Control agencies with jurisdiction over areas with ozone problems are encouraged to use photochemical grid models, such as the Models-3/Community Multi-scale Air Quality (CMAQ) modeling system,[39] to evaluate the relationship between precursor species and ozone. Judgement on the suitability of a model for a given application should consider factors that include use of the model in an attainment test, development of emissions and meteorological inputs to the model and choice of episodes to model.[32] Similar models for the 8-hour NAAQS and for the 1-hour NAAQS are appropriate.

b. *Choice of Models to Complement Photochemical Grid Models.* As previously noted, observational models, Lagrangian models, or

the refined version of the Ozone Isopleth Plotting Program (OZIPR)[40] may be used to help guide choice of strategies to simulate with a photochemical grid model and to corroborate results obtained with a grid model. Receptor models have also been used to apportion sources of ozone precursors (e.g., VOC) in urban domains. EPA has issued guidance[32] in selecting appropriate techniques.

c. *Estimating the Impact of Individual Sources*. Choice of methods used to assess the impact of an individual source depends on the nature of the source and its emissions. Thus, model users should consult with the Regional Office to determine the most suitable approach on a case-by-case basis (subsection 3.2.2).

5.2.2 Models for Particulate Matter

5.2.2.1 PM–2.5

a. *Choice of Models for Multi-source Applications*. Simulation of phenomena resulting in high ambient PM–2.5 can be a multi-faceted and complex problem resulting from PM–2.5's existence as an aerosol mixture. Treating secondary components of PM–2.5, such as sulfates and nitrates, can be a highly complex and resource-intensive exercise. Control agencies with jurisdiction over areas with secondary PM–2.5 problems are encouraged to use models which integrate chemical and physical processes important in the formation, decay and transport of these species (e.g., Models-3/CMAQ[38] or REMSAD[41]). Primary components can be simulated using less resource-intensive techniques. Suitability of a modeling approach or mix of modeling approaches for a given application requires technical judgement,[33] as well as professional experience in choice of models, use of the model(s) in an attainment test, development of emissions and meteorological inputs to the model and selection of days to model.

b. *Choice of Analysis Techniques to Complement Air Quality Simulation Models*. Receptor models may be used to corroborate predictions obtained with one or more air quality simulation models. They may also be potentially useful in helping to define specific source categories contributing to major components of PM–2.5.[33]

c. *Estimating the Impact of Individual Sources*. Choice of methods used to assess the impact of an individual source depends on the nature of the source and its emissions. Thus, model users should consult with the Regional Office to determine the most suitable approach on a case-by-case basis (subsection 3.2.2).

5.2.2.2 PM–10

a. Screening techniques like those identified in subsection 4.2.1 are applicable to PM–10. Conservative assumptions which do not allow removal or transformation are suggested for screening. Thus, it is recommended that subjectively determined values for ''half-life'' or pollutant decay not be used as a surrogate for particle removal. Proportional models (rollback/forward) may not be applied for screening analysis, unless such techniques are used in conjunction with receptor modeling.[34]

b. Refined models such as those discussed in subsection 4.2.2 are recommended for PM–10. However, where possible, particle size, gas-to-particle formation, and their effect on ambient concentrations may be considered. For point sources of small particles and for source-specific analyses of complicated sources, use the appropriate recommended steady-state plume dispersion model (subsection 4.2.2).

c. Receptor models have proven useful for helping validate emission inventories and for corroborating source-specific impacts estimated by dispersion models. The Chemical Mass Balance (CMB) model is useful for apportioning impacts from localized sources.[42 43 44] Other receptor models, e.g., the Positive Matrix Factorization (PMF) model[45] and Unmix,[46] which don't share some of CMB's constraints, have also been applied. In regulatory applications, dispersion models have been used in conjunction with receptor models to attribute source (or source category) contributions. Guidance is available for PM–10 sampling and analysis applicable to receptor modeling.[47]

d. Under certain conditions, recommended dispersion models may not be reliable. In such circumstances, the modeling approach should be approved by the Regional Office on a case-by-case basis. Analyses involving model calculations for stagnation conditions should also be justified on a case-by-case basis (subsection 7.2.8).

e. Fugitive dust usually refers to dust put into the atmosphere by the wind blowing over plowed fields, dirt roads or desert or sandy areas with little or no vegetation. Reentrained dust is that which is put into the air by reason of vehicles driving over dirt roads (or dirty roads) and dusty areas. Such sources can be characterized as line, area or volume sources. Emission rates may be based on site specific data or values from the general literature. Fugitive emissions include the emissions resulting from the industrial process that are not captured and vented through a stack but may be released from various locations within the complex. In some unique cases a model developed specifically for the situation may be needed. Due to the difficult nature of characterizing and modeling fugitive dust and fugitive emissions, it is recommended that the proposed procedure be cleared by the Regional Office for each specific situation before the modeling exercise is begun.

5.2.3 Models for Carbon Monoxide

a. Guidance is available for analyzing CO impacts at roadway intersections.[48] The recommended screening model for such analyses is CAL3QHC.[49 50] This model combines CALINE3 (listed in Appendix A) with a traffic model to calculate delays and queues that occur at signalized intersections. The screening approach is described in reference 48; a refined approach may be considered on a case-by-case basis with CAL3QHCR.[51] The latest version of the MOBILE (mobile source emission factor) model should be used for emissions input to intersection models.

b. For analyses of highways characterized by uninterrupted traffic flows, CALINE3 is recommended, with emissions input from the latest version of the MOBILE model. A scientific review article for line source models is available.[52]

c. For urban area wide analyses of CO, an Eulerian grid model should be used. Information on SIP development and requirements for using such models can be found in several references.[48 53 54 55]

d. Where point sources of CO are of concern, they should be treated using the screening and refined techniques described in Section 4.

5.2.4 Models for Nitrogen Dioxide (Annual Average)

a. A tiered screening approach is recommended to obtain annual average estimates of NO_2 from point sources for New Source Review analysis, including PSD, and for SIP planning purposes. This multi-tiered approach is conceptually shown in Figure 5–1 and described in paragraphs b through d of this subsection:

Figure 5–1

Multi-tiered screening approach for Estimating Annual NO_2 Concentrations from Point Sources

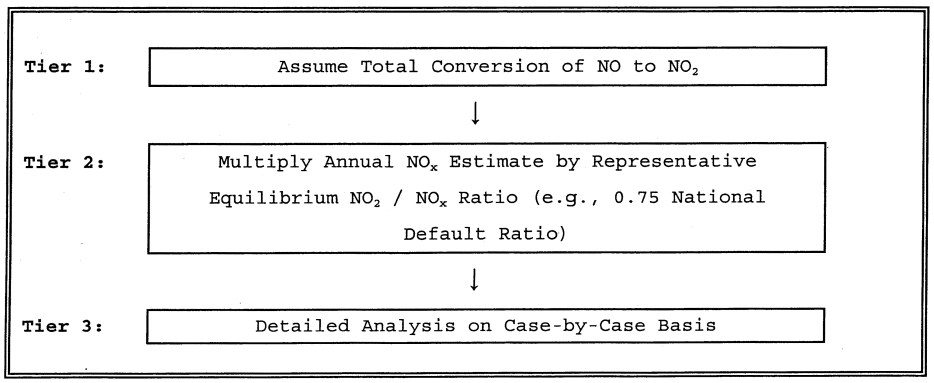

b. For Tier 1 (the initial screen), use an appropriate model in subsection 4.2.2 to estimate the maximum annual average concentration and assume a total conversion of NO to NO_2. If the concentration exceeds the NAAQS and/or PSD increments for NO_2, proceed to the 2nd level screen.

c. For Tier 2 (2nd level) screening analysis, multiply the Tier 1 estimate(s) by an empirically derived NO_2/NO_X value of 0.75 (annual national default).[56] The reviewing agency may establish an alternative default NO_2/NO_X ratio based on ambient annual average NO_2 and annual average NO_X data representative of area wide quasi-equilibrium conditions. Alternative default NO_2/NO_X ratios should be based on data satisfying quality assurance procedures that ensure data accuracy for both NO_2 and NO_X within the typical range of measured values. In areas with relatively low NO_X concentrations, the quality assurance procedures used to determine compliance with the NO_2 national ambient air quality standard may not be adequate. In addition, default NO_2/NO_X ratios, including the 0.75 national default value, can underestimate long range NO_2 impacts and should be used with caution in long range transport scenarios.

d. For Tier 3 (3rd level) analysis, a detailed screening method may be selected on a case-by-case basis. For point source modeling, detailed screening techniques such as the Ozone Limiting Method[57] may also be considered. Also, a site specific NO_2/NO_X ratio may be used as a detailed screening method if it meets the same restrictions as described for alternative default NO_2/NO_X ratios. Ambient NO_X monitors used to develop a site specific ratio should be sited to obtain the NO_2

and NO_X concentrations under quasi-equilibrium conditions. Data obtained from monitors sited at the maximum NO_X impact site, as may be required in a PSD pre-construction monitoring program, likely reflect transitional NO_X conditions. Therefore, NO_X data from maximum impact sites may not be suitable for determining a site specific NO_2/NO_X ratio that is applicable for the entire modeling analysis. A site specific ratio derived from maximum impact data can only be used to estimate NO_2 impacts at receptors located within the same distance of the source as the source-to-monitor distance.

e. In urban areas (subsection 7.2.3), a proportional model may be used as a preliminary assessment to evaluate control strategies to meet the NAAQS for multiple minor sources, *i.e.*, minor point, area and mobile sources of NO_X; concentrations resulting from major point sources should be estimated separately as discussed above, then added to the impact of the minor sources. An acceptable screening technique for urban complexes is to assume that all NO_X is emitted in the form of NO_2 and to use a model from Appendix A for nonreactive pollutants to estimate NO_2 concentrations. A more accurate estimate can be obtained by: (1) Calculating the annual average concentrations of NO_X with an urban model, and (2) converting these estimates to NO_2 concentrations using an empirically derived annual NO_2/NO_X ratio. A value of 0.75 is recommended for this ratio. However, a spatially averaged alternative default annual NO_2/NO_X ratio may be determined from an existing air quality monitoring network and used in lieu of the 0.75 value if it is determined to be representative of prevailing ratios in the urban area by the reviewing agency. To ensure use of appropriate locally derived annual average NO_2/NO_X ratios, monitoring data under consideration should be limited to those collected at monitors meeting siting criteria defined in 40 CFR Part 58, Appendix D as representative of ''neighborhood'', ''urban'', or ''regional'' scales. Furthermore, the highest annual spatially averaged NO_2/NO_X ratio from the most recent 3 years of complete data should be used to foster conservatism in estimated impacts.

f. To demonstrate compliance with NO_2 PSD increments in urban areas, emissions from major and minor sources should be included in the modeling analysis. Point and area source emissions should be modeled as discussed above. If mobile source emissions do not contribute to localized areas of high ambient NO_2 concentrations, they should be modeled as area sources. When modeled as area sources, mobile source emissions should be assumed uniform over the entire highway link and allocated to each area source grid square based on the portion of highway link within each grid square. If localized areas of high concentrations are likely, then mobile sources should be modeled as line sources using an appropriate steady-state plume dispersion model (e.g., CAL3QHCR; subsection 5.2.3).

g. More refined techniques to handle special circumstances may be considered on a case-by-case basis and agreement with the appropriate reviewing authority (paragraph 3.0(b)) should be obtained. Such techniques should consider individual quantities of NO and NO_2 emissions, atmospheric transport and dispersion, and atmospheric transformation of NO to NO_2. Where they are available, site specific data on the conversion of NO to NO_2 may be used. Photochemical dispersion models, if used for other pollutants in the area, may also be applied to the NO_X problem.

5.2.5 Models for Lead

a. For major lead point sources, such as smelters, which contribute fugitive emissions and for which deposition is important, professional judgement should be used, and there should be coordination with the appropriate reviewing authority (paragraph 3.0(b)). To model an entire major urban area or to model areas without significant sources of lead emissions, as a minimum a proportional (rollback) model may be used for air quality analysis. The rollback philosophy assumes that measured pollutant concentrations are proportional to emissions. However, urban or other dispersion models are encouraged in these circumstances where the use of such models is feasible.

b. In modeling the effect of traditional line sources (such as a specific roadway or highway) on lead air quality, dispersion models applied for other pollutants can be used. Dispersion models such as CALINE3 and CAL3QHCR have been used for modeling carbon monoxide emissions from highways and intersections (subsection 5.2.3). Where there is a point source in the middle of a substantial road network, the lead concentrations that result from the road network should be treated as background (subsection 8.2); the point source and any nearby major roadways should be modeled separately using the appropriate recommended steady-state plume dispersion model (subsection 4.2.2).

6.0 Other Model Requirements

6.1 Discussion

a. This section covers those cases where specific techniques have been developed for special regulatory programs. Most of the programs have, or will have when fully developed, separate guidance documents that cover the program and a discussion of the tools that are needed. The following paragraphs reference those guidance documents, when they are available. No attempt has

been made to provide a comprehensive discussion of each topic since the reference documents were designed to do that. This section will undergo periodic revision as new programs are added and new techniques are developed.

b. Other Federal agencies have also developed specific modeling approaches for their own regulatory or other requirements.[58] Although such regulatory requirements and manuals may have come about because of EPA rules or standards, the implementation of such regulations and the use of the modeling techniques is under the jurisdiction of the agency issuing the manual or directive.

c. The need to estimate impacts at distances greater than 50km (the nominal distance to which EPA considers most steady-state Gaussian plume models are applicable) is an important one especially when considering the effects from secondary pollutants. Unfortunately, models originally available to EPA had not undergone sufficient field evaluation to be recommended for general use. Data bases from field studies at mesoscale and long range transport distances were limited in detail. This limitation was a result of the expense to perform the field studies required to verify and improve mesoscale and long range transport models. Meteorological data adequate for generating three-dimensional wind fields were particularly sparse. Application of models to complicated terrain compounds the difficulty of making good assessments of long range transport impacts. EPA completed limited evaluation of several long range transport (LRT) models against two sets of field data and evaluated results.[59] Based on the results, EPA concluded that long range and mesoscale transport models were limited for regulatory use to a case-by-case basis. However a more recent series of comparisons has been completed for a new model, CALPUFF (Section A.3). Several of these field studies involved three-to-four hour releases of tracer gas sampled along arcs of receptors at distances greater than 50km downwind. In some cases, short-term concentration sampling was available, such that the transport of the tracer puff as it passed the arc could be monitored. Differences on the order of 10 to 20 degrees were found between the location of the simulated and observed center of mass of the tracer puff. Most of the simulated centerline concentration maxima along each arc were within a factor of two of those observed. It was concluded from these case studies that the CALPUFF dispersion model had performed in a reasonable manner, and had no apparent bias toward over or under prediction, so long as the transport distance was limited to less than 300km.[60]

6.2 Recommendations

6.2.1 Visibility

a. Visibility in important natural areas (e.g., Federal Class I areas) is protected under a number of provisions of the Clean Air Act, including Sections 169A and 169B (addressing impacts primarily from existing sources) and Section 165 (new source review). Visibility impairment is caused by light scattering and light absorption associated with particles and gases in the atmosphere. In most areas of the country, light scattering by PM–2.5 is the most significant component of visibility impairment. The key components of PM–2.5 contributing to visibility impairment include sulfates, nitrates, organic carbon, elemental carbon, and crustal material.

b. The visibility regulations as promulgated in December 1980 (40 CFR 51.300–307) require States to mitigate visibility impairment, in any of the 156 mandatory Federal Class I areas, that is found to be ''reasonably attributable'' to a single source or a small group of sources. In 1985, EPA promulgated Federal Implementation Plans (FIPs) for several States without approved visibility provisions in their SIPs. The IMPROVE (Interagency Monitoring for Protected Visual Environments) monitoring network, a cooperative effort between EPA, the States, and Federal land management agencies, was established to implement the monitoring requirements in these FIPs. Data has been collected by the IMPROVE network since 1988.

c. In 1999, EPA issued revisions to the 1980 regulations to address visibility impairment in the form of regional haze, which is caused by numerous, diverse sources (e.g., stationary, mobile, and area sources) located across a broad region (40 CFR 51.308–309). The state of relevant scientific knowledge has expanded significantly since the Clean Air Act Amendments of 1977. A number of studies and reports[61 62] have concluded that long range transport (e.g., up to hundreds of kilometers) of fine particulate matter plays a significant role in visibility impairment across the country. Section 169A of the Act requires states to develop SIPs containing long-term strategies for remedying existing and preventing future visibility impairment in 156 mandatory Class I federal areas. In order to develop long-term strategies to address regional haze, many States will need to conduct regional-scale modeling of fine particulate concentrations and associated visibility impairment (e.g., light extinction and deciview metrics).

d. To calculate the potential impact of a plume of specified emissions for specific transport and dispersion conditions (''plume blight''), a screening model, VISCREEN, and guidance are available.[63] If a more comprehensive analysis is required, a refined

model should be selected . The model selection (VISCREEN vs. PLUVUE II or some other refined model), procedures, and analyses should be determined in consultation with the appropriate reviewing authority (paragraph 3.0(b)) and the affected Federal Land Manager (FLM). FLMs are responsible for determining whether there is an adverse effect by a plume on a Class I area.

e. CALPUFF (Section A.3) may be applied when assessment is needed of reasonably attributable haze impairment or atmospheric deposition due to one or a small group of sources. This situation may involve more sources and larger modeling domains than that to which VISCREEN ideally may be applied. The procedures and analyses should be determined in consultation with the appropriate reviewing authority (paragraph 3.0(b)) and the affected FLM(s).

f. Regional scale models are used by EPA to develop and evaluate national policy and assist State and local control agencies. Two such models which can be used to assess visibility impacts from source emissions are Models-3/CMAQ[38] and REMSAD.[41] Model users should consult with the appropriate reviewing authority (paragraph 3.0(b)), which in this instance would include FLMs.

6.2.2 Good Engineering Practice Stack Height

a. The use of stack height credit in excess of Good Engineering Practice (GEP) stack height or credit resulting from any other dispersion technique is prohibited in the development of emission limitations by 40 CFR 51.118 and 40 CFR 51.164. The definitions of GEP stack height and dispersion technique are contained in 40 CFR 51.100. Methods and procedures for making the appropriate stack height calculations, determining stack height credits and an example of applying those techniques are found in several references[64 65 66 67], which provide a great deal of additional information for evaluating and describing building cavity and wake effects.

b. If stacks for new or existing major sources are found to be less than the height defined by EPA's refined formula for determining GEP height, then air quality impacts associated with cavity or wake effects due to the nearby building structures should be determined. The EPA refined formula height is defined as H + 1.5L (*see* reference 66). Detailed downwash screening procedures[24] for both the cavity and wake regions should be followed. If more refined concentration estimates are required, the recommended steady-state plume dispersion model in subsection 4.2.2 contains algorithms for building wake calculations and should be used.

6.2.3 Long Range Transport (LRT) (*i.e.*, Beyond 50km)

a. Section 165(d) of the Clean Air Act requires that suspected adverse impacts on PSD Class I areas be determined. However, 50km is the useful distance to which most steady-state Gaussian plume models are considered accurate for setting emission limits. Since in many cases PSD analyses show that Class I areas may be threatened at distances greater than 50km from new sources, some procedure is needed to (1) determine if an adverse impact will occur, and (2) identify the model to be used in setting an emission limit if the Class I increments are threatened. In addition to the situations just described, there are certain applications containing a mixture of both long range and short range source-receptor relationships in a large modeled domain (e.g., several industrialized areas located along a river or valley). Historically, these applications have presented considerable difficulty to an analyst if impacts from sources having transport distances greater than 50km significantly contributed to the design concentrations. To properly analyze applications of this type, a modeling approach is needed which has the capability of combining, in a consistent manner, impacts involving both short and long range transport. The CALPUFF modeling system, listed in Appendix A, has been designed to accommodate both the Class I area LRT situation and the large modeling domain situation. Given the judgement and refinement involved, conducting a LRT modeling assessment will require significant consultation with the appropriate reviewing authority (paragraph 3.0(b)) and the affected FLM(s). The FLM has an affirmative responsibility to protect air quality related values (AQRVs) that may be affected, and to provide the appropriate procedures and analysis techniques. Where there is no increment violation, the ultimate decision on whether a Class I area is adversely affected is the responsibility of the appropriate reviewing authority (Section 165(d)(2)(C)(ii) of the Clean Air Act), taking into consideration any information on the impacts on AQRVs provided by the FLM. According to Section 165(d)(2)(C)(iii) of the Clean Air Act, if there is a Class I increment violation, the *source* must demonstrate to the satisfaction of the FLM that the emissions from the source will have no adverse impact on the AQRVs.

b. If LRT is determined to be important, then refined estimates utilizing the CALPUFF modeling system should be obtained. A screening approach[60 68] is also available for use on a case-by-case basis that generally provides concentrations that are higher than those obtained using refined characterizations of the meteorological conditions. The meteorological input data requirements for developing the time and

space varying three-dimensional winds and dispersion meteorology for refined analyses are discussed in paragraph 8.3.1.2(d). Additional information on applying this model is contained in Appendix A. To facilitate use of complex air quality and meteorological modeling systems, a written protocol approved by the appropriate reviewing authority (paragraph 3.0(b)) and the affected FLM(s) may be considered for developing consensus in the methods and procedures to be followed.

6.2.4 Modeling Guidance for Other Governmental Programs

a. When using the models recommended or discussed in the *Guideline* in support of programmatic requirements not specifically covered by EPA regulations, the model user should consult the appropriate Federal or State agency to ensure the proper application and use of the models. For modeling associated with PSD permit applications that involve a Class I area, the appropriate Federal Land Manager should be consulted on all modeling questions.

b. The Offshore and Coastal Dispersion (OCD) model, described in Appendix A, was developed by the Minerals Management Service and is recommended for estimating air quality impact from offshore sources on onshore, flat terrain areas. The OCD model is not recommended for use in air quality impact assessments for onshore sources. Sources located on or just inland of a shoreline where fumigation is expected should be treated in accordance with subsection 7.2.8.

c. The latest version of the Emissions and Dispersion Modeling System (EDMS), was developed and is supported by the Federal Aviation Administration (FAA), and is appropriate for air quality assessment of primary pollutant impacts at airports or air bases. EDMS has adopted AERMOD for treating dispersion. Application of EDMS is intended for estimating the collective impact of changes in aircraft operations, point source, and mobile source emissions on pollutant concentrations. It is not intended for PSD, SIP, or other regulatory air quality analyses of point or mobile sources at or peripheral to airport property that are unrelated to airport operations. If changes in other than aircraft operations are associated with analyses, a model recommended in Chapter 4 or 5 should be used. The latest version of EDMS may be obtained from FAA at its Web site: *http://www.aee.faa.gov/emissions/edms/edmshome.htm*.

7.0 General Modeling Considerations

7.1 Discussion

a. This section contains recommendations concerning a number of different issues not explicitly covered in other sections of this guide. The topics covered here are not specific to any one program or modeling area but are common to nearly all modeling analyses for criteria pollutants.

7.2 Recommendations

7.2.1 Design Concentrations (*See Also* Subsection 10.2.3.1)

7.2.1.1 Design Concentrations for SO_2, PM–10, CO, Pb, and NO_2

a. An air quality analysis for SO_2, PM–10, CO, Pb, and NO_2 is required to determine if the source will (1) cause a violation of the NAAQS, or (2) cause or contribute to air quality deterioration greater than the specified allowable PSD increment. For the former, background concentration (subsection 8.2) should be added to the estimated impact of the source to determine the design concentration. For the latter, the design concentration includes impact from all increment consuming sources.

b. If the air quality analyses are conducted using the period of meteorological input data recommended in subsection 8.3.1.2 (e.g., 5 years of National Weather Service (NWS) data or at least 1 year of site specific data; subsection 8.3.3), then the design concentration based on the highest, second-highest short term concentration over the entire receptor network for each year modeled or the highest long term average (whichever is controlling) should be used to determine emission limitations to assess compliance with the NAAQS and PSD increments. For the 24-hour PM–10 NAAQS (which is a probabilistic standard)—when multiple years are modeled, they collectively represent a single period. Thus, if 5 years of NWS data are modeled, then the highest sixth highest concentration for the whole period becomes the design value. And in general, when n years are modeled, the (n+1)th highest concentration over the n-year period is the design value, since this represents an average or expected exceedance rate of one per year.

c. When sufficient and representative data exist for less than a 5-year period from a nearby NWS site, or when site specific data have been collected for less than a full continuous year, or when it has been determined that the site specific data may not be temporally representative (subsection 8.3.3), then the highest concentration estimate should be considered the design value. This is because the length of the data record may be too short to assure that the conditions producing worst-case estimates have been adequately sampled. The highest value is then a surrogate for the concentration that is not to be exceeded more than once per year (the wording of the deterministic standards). Also, the highest concentration should be used whenever selected worst-case conditions are input to a screening technique, as described in EPA guidance.[24]

d. If the controlling concentration is an annual average value and multiple years of data (site specific or NWS) are used, then the design value is the highest of the annual averages calculated for the individual years. If the controlling concentration is a quarterly average and multiple years are used, then the highest individual quarterly average should be considered the design value.

e. As long a period of record as possible should be used in making estimates to determine design values and PSD increments. If more than 1 year of site specific data is available, it should be used.

7.2.1.2 Design Concentrations for O_3 and PM–2.5

a. Guidance and specific instructions for the determination of the 1-hr and 8-hr design concentrations for ozone are provided in Appendix H and I (respectively) of reference 4. Appendix H explains how to determine when the expected number of days per calendar year with maximum hourly concentrations above the NAAQS is equal to or less than 1. Appendix I explains the data handling conventions and computations necessary for determining whether the 8-hour primary and secondary NAAQS are met at an ambient monitoring site. For PM–2.5, Appendix N of reference 4, and supplementary guidance,[69] explain the data handling conventions and computations necessary for determining when the annual and 24-hour primary and secondary NAAQS are met. For all SIP revisions the user should check with the Regional Office to obtain the most recent guidance documents and policy memoranda concerning the pollutant in question. There are currently no PSD increments for O_3 and PM–2.5.

7.2.2 Critical Receptor Sites

a. Receptor sites for refined modeling should be utilized in sufficient detail to estimate the highest concentrations and possible violations of a NAAQS or a PSD increment. In designing a receptor network, the emphasis should be placed on receptor resolution and location, not total number of receptors. The selection of receptor sites should be a case-by-case determination taking into consideration the topography, the climatology, monitor sites, and the results of the initial screening procedure.

7.2.3 Dispersion Coefficients

a. Steady-state Gaussian plume models used in most applications should employ dispersion coefficients consistent with those contained in the preferred models in Appendix A. Factors such as averaging time, urban/rural surroundings (*see* paragraphs (b)–(f) of this subsection), and type of source (point vs. line) may dictate the selection of specific coefficients. Coefficients used in some Appendix A models are identical to, or at least based on, Pasquill-Gifford coefficients[70] in rural areas and McElroy-Pooler[71] coefficients in urban areas. A key feature of AERMOD's formulation is the use of directly observed variables of the boundary layer to parameterize dispersion.[22]

b. The selection of either rural or urban dispersion coefficients in a specific application should follow one of the procedures suggested by Irwin[72] and briefly described in paragraphs (c)–(f) of this subsection. These include a land use classification procedure or a population based procedure to determine whether the character of an area is primarily urban or rural.

c. Land Use Procedure: (1) Classify the land use within the total area, A_o, circumscribed by a 3km radius circle about the source using the meteorological land use typing scheme proposed by Auer[73]; (2) if land use types I1, I2, C1, R2, and R3 account for 50 percent or more of A_o, use urban dispersion coefficients; otherwise, use appropriate rural dispersion coefficients.

d. Population Density Procedure: (1) Compute the average population density, $\bar{p}$ per square kilometer with A_o as defined above; (2) If $\bar{p}$ is greater than 750 people/km_2, use urban dispersion coefficients; otherwise use appropriate rural dispersion coefficients.

e. Of the two methods, the land use procedure is considered more definitive. Population density should be used with caution and should not be applied to highly industrialized areas where the population density may be low and thus a rural classification would be indicated, but the area is sufficiently built-up so that the urban land use criteria would be satisfied. In this case, the classification should already be ''urban'' and urban dispersion parameters should be used.

f. Sources located in an area defined as urban should be modeled using urban dispersion parameters. Sources located in areas defined as rural should be modeled using the rural dispersion parameters. For analyses of whole urban complexes, the entire area should be modeled as an urban region if most of the sources are located in areas classified as urban.

g. Buoyancy-induced dispersion (BID), as identified by Pasquill[74], is included in the preferred models and should be used where buoyant sources, e.g., those involving fuel combustion, are involved.

7.2.4 Stability Categories

a. The Pasquill approach to classifying stability is commonly used in preferred models (Appendix A). The Pasquill method, as modified by Turner[75], was developed for use with commonly observed meteorological data from the National Weather Service and is based on cloud cover, insolation and wind speed.

b. Procedures to determine Pasquill stability categories from other than NWS data are found in subsection 8.3. Any other method to determine Pasquill stability categories must be justified on a case-by-case basis.

c. For a given model application where stability categories are the basis for selecting dispersion coefficients, both σ_y and σ_z should be determined from the same stability category. ''Split sigmas'' in that instance are not recommended. Sector averaging, which eliminates the σ_y term, is commonly acceptable in complex terrain screening methods.

d. AERMOD, also a preferred model in Appendix A, uses a planetary boundary layer scaling parameter to characterize stability.[22] This approach represents a departure from the discrete, hourly stability categories estimated under the Pasquill-Gifford-Turner scheme.

7.2.5 Plume Rise

a. The plume rise methods of Briggs[76 77] are incorporated in many of the preferred models and are recommended for use in many modeling applications. In AERMOD,[22] for the stable boundary layer, plume rise is estimated using an iterative approach, similar to that in the CTDMPLUS model. In the convective boundary layer, plume rise is superposed on the displacements by random convective velocities.[78] In AERMOD, plume rise is computed using the methods of Briggs excepting cases involving building downwash, in which a numerical solution of the mass, energy, and momentum conservation laws is performed.[23] No explicit provisions in these models are made for multistack plume rise enhancement or the handling of such special plumes as flares; these problems should be considered on a case-by-case basis.

b. Gradual plume rise is generally recommended where its use is appropriate: (1) In AERMOD; (2) in complex terrain screening procedures to determine close-in impacts and (3) when calculating the effects of building wakes. The building wake algorithm in AERMOD incorporates and exercises the thermodynamically based gradual plume rise calculations as described in (a) above. If the building wake is calculated to affect the plume for any hour, gradual plume rise is also used in downwind dispersion calculations to the distance of final plume rise, after which final plume rise is used. Plumes captured by the near wake are re-emitted to the far wake as a ground-level volume source.

c. Stack tip downwash generally occurs with poorly constructed stacks and when the ratio of the stack exit velocity to wind speed is small. An algorithm developed by Briggs[77] is the recommended technique for this situation and is used in preferred models for point sources.

7.2.6 Chemical Transformation

a. The chemical transformation of SO_2 emitted from point sources or single industrial plants in rural areas is generally assumed to be relatively unimportant to the estimation of maximum concentrations when travel time is limited to a few hours. However, in urban areas, where synergistic effects among pollutants are of considerable consequence, chemical transformation rates may be of concern. In urban area applications, a half-life of 4 hours[75] may be applied to the analysis of SO_2 emissions. Calculations of transformation coefficients from site specific studies can be used to define a ''half-life'' to be used in a steady-state Gaussian plume model with any travel time, or in any application, if appropriate documentation is provided. Such conversion factors for pollutant half-life should not be used with screening analyses.

b. Use of models incorporating complex chemical mechanisms should be considered only on a case-by-case basis with proper demonstration of applicability. These are generally regional models not designed for the evaluation of individual sources but used primarily for region-wide evaluations. Visibility models also incorporate chemical transformation mechanisms which are an integral part of the visibility model itself and should be used in visibility assessments.

7.2.7 Gravitational Settling and Deposition

a. An ''infinite half-life'' should be used for estimates of particle concentrations when steady-state Gaussian plume models containing only exponential decay terms for treating settling and deposition are used.

b. Gravitational settling and deposition may be directly included in a model if either is a significant factor. When particulate matter sources can be quantified and settling and dry deposition are problems, professional judgement should be used, and there should be coordination with the appropriate reviewing authority (paragraph 3.0(b)).

7.2.8 Complex Winds

a. *Inhomogeneous Local Winds.* In many parts of the United States, the ground is neither flat nor is the ground cover (or land use) uniform. These geographical variations can generate local winds and circulations, and modify the prevailing ambient winds and circulations. Geographic effects are most apparent when the ambient winds are light or calm.[79] In general these geographically induced wind circulation effects are named after the source location of the winds, e.g., lake and sea breezes, and mountain and valley winds. In very rugged hilly or mountainous terrain, along coastlines, or near large land use variations, the characterization of the winds is a balance of various forces, such that the assumptions of steady-

state straight-line transport both in time and space are inappropriate. In the special cases described, the CALPUFF modeling system (described in Appendix A) may be applied on a case-by-case basis for air quality estimates in such complex non-steady-state meteorological conditions. The purpose of choosing a modeling system like CALPUFF is to fully treat the time and space variations of meteorology effects on transport and dispersion. The setup and application of the model should be determined in consultation with the appropriate reviewing authority (paragraph 3.0(b)) consistent with limitations of paragraph 3.2.2(e). The meteorological input data requirements for developing the time and space varying three-dimensional winds and dispersion meteorology for these situations are discussed in paragraphs 8.3.1.2(d) and 8.3.1.2(f). Examples of inhomogeneous winds include, but aren't limited to, situations described in the following paragraphs (i)–(iii):

i. *Inversion Breakup Fumigation*. Inversion breakup fumigation occurs when a plume (or multiple plumes) is emitted into a stable layer of air and that layer is subsequently mixed to the ground through convective transfer of heat from the surface or because of advection to less stable surroundings. Fumigation may cause excessively high concentrations but is usually rather short-lived at a given receptor. There are no recommended refined techniques to model this phenomenon. There are, however, screening procedures[24] that may be used to approximate the concentrations. Considerable care should be exercised in using the results obtained from the screening techniques.

ii. *Shoreline Fumigation*. Fumigation can be an important phenomenon on and near the shoreline of bodies of water. This can affect both individual plumes and area-wide emissions. When fumigation conditions are expected to occur from a source or sources with tall stacks located on or just inland of a shoreline, this should be addressed in the air quality modeling analysis. The Shoreline Dispersion Model (SDM) listed on EPA's Internet SCRAM Web site (subsection 2.3) may be applied on a case-by-case basis when air quality estimates under shoreline fumigation conditions are needed.[80] Information on the results of EPA's evaluation of this model together with other coastal fumigation models is available.[81] Selection of the appropriate model for applications where shoreline fumigation is of concern should be determined in consultation with the appropriate reviewing authority (paragraph 3.0(b)).

iii. *Stagnation*. Stagnation conditions are characterized by calm or very low wind speeds, and variable wind directions. These stagnant meteorological conditions may persist for several hours to several days. During stagnation conditions, the dispersion of air pollutants, especially those from low-level emissions sources, tends to be minimized, potentially leading to relatively high ground-level concentrations. If point sources are of interest, users should note the guidance provided for CALPUFF in paragraph (a) of this subsection. Selection of the appropriate model for applications where stagnation is of concern should be determined in consultation with the appropriate reviewing authority (paragraph 3.0(b)).

7.2.9 Calibration of Models

a. Calibration of models is not common practice and is subject to much error and misunderstanding. There have been attempts by some to compare model estimates and measurements on an event-by-event basis and then to calibrate a model with results of that comparison. This approach is severely limited by uncertainties in both source and meteorological data and therefore it is difficult to precisely estimate the concentration at an exact location for a specific increment of time. Such uncertainties make calibration of models of questionable benefit. Therefore, model calibration is unacceptable.

8.0 Model Input Data

a. Data bases and related procedures for estimating input parameters are an integral part of the modeling procedure. The most appropriate data available should always be selected for use in modeling analyses. Concentrations can vary widely depending on the source data or meteorological data used. Input data are a major source of uncertainties in any modeling analysis. This section attempts to minimize the uncertainty associated with data base selection and use by identifying requirements for data used in modeling. A checklist of input data requirements for modeling analyses is posted on EPA's Internet SCRAM Web site (subsection 2.3). More specific data requirements and the format required for the individual models are described in detail in the users' guide for each model.

8.1 Source Data

8.1.1 Discussion

a. Sources of pollutants can be classified as point, line and area/volume sources. Point sources are defined in terms of size and may vary between regulatory programs. The line sources most frequently considered are roadways and streets along which there are well-defined movements of motor vehicles, but they may be lines of roof vents or stacks such as in aluminum refineries. Area and volume sources are often collections of a multitude of minor sources with individually small emissions that are impractical to consider as separate point or line sources. Large area sources are typically treated as a grid

network of square areas, with pollutant emissions distributed uniformly within each grid square.

b. Emission factors are compiled in an EPA publication commonly known as AP–42;[82] an indication of the quality and amount of data on which many of the factors are based is also provided. Other information concerning emissions is available in EPA publications relating to specific source categories. The appropriate reviewing authority (paragraph 3.0(b)) should be consulted to determine appropriate source definitions and for guidance concerning the determination of emissions from and techniques for modeling the various source types.

8.1.2 Recommendations

a. For point source applications the load or operating condition that causes maximum ground-level concentrations should be established. As a minimum, the source should be modeled using the design capacity (100 percent load). If a source operates at greater than design capacity for periods that could result in violations of the standards or PSD increments, this load)[a] should be modeled. Where the source operates at substantially less than design capacity, and the changes in the stack parameters associated with the operating conditions could lead to higher ground level concentrations, loads such as 50 percent and 75 percent of capacity should also be modeled. A range of operating conditions should be considered in screening analyses; the load causing the highest concentration, in addition to the design load, should be included in refined modeling. For a steam power plant, the following (b-h) is typical of the kind of data on source characteristics and operating conditions that may be needed. Generally, input data requirements for air quality models necessitate the use of metric units; where English units are common for engineering usage, a conversion to metric is required.

b. *Plant layout.* The connection scheme between boilers and stacks, and the distance and direction between stacks, building parameters (length, width, height, location and orientation relative to stacks) for plant structures which house boilers, control equipment, and surrounding buildings within a distance of approximately five stack heights.

c. *Stack parameters.* For all stacks, the stack height and inside diameter (meters), and the temperature (K) and volume flow rate (actual cubic meters per second) or exit gas velocity (meters per second) for operation at 100 percent, 75 percent and 50 percent load.

d. *Boiler size.* For all boilers, the associated megawatts, 10^6 BTU/hr, and pounds of steam per hour, and the design and/or actual fuel consumption rate for 100 percent load for coal (tons/hour), oil (barrels/hour), and natural gas (thousand cubic feet/hour).

e. *Boiler parameters.* For all boilers, the percent excess air used, the boiler type (e.g., wet bottom, cyclone, etc.), and the type of firing (e.g., pulverized coal, front firing, etc.).

f. *Operating conditions.* For all boilers, the type, amount and pollutant contents of fuel, the total hours of boiler operation and the boiler capacity factor during the year, and the percent load for peak conditions.

g. *Pollution control equipment parameters.* For each boiler served and each pollutant affected, the type of emission control equipment, the year of its installation, its design efficiency and mass emission rate, the date of the last test and the tested efficiency, the number of hours of operation during the latest year, and the best engineering estimate of its projected efficiency if used in conjunction with coal combustion; data for any anticipated modifications or additions.

h. *Data for new boilers or stacks.* For all new boilers and stacks under construction and for all planned modifications to existing boilers or stacks, the scheduled date of completion, and the data or best estimates available for items (b) through (g) of this subsection following completion of construction or modification.

i. In stationary point source applications for compliance with short term ambient standards, SIP control strategies should be tested using the emission input shown on Table 8–1. When using a refined model, sources should be modeled sequentially with these loads for every hour of the year. To evaluate SIPs for compliance with quarterly and annual standards, emission input data shown in Table 8–1 should again be used. Emissions from area sources should generally be based on annual average conditions. The source input information in each model user's guide should be carefully consulted and the checklist (paragraph 8.0(a)) should also be consulted for other possible emission data that could be helpful. NAAQS compliance demonstrations in a PSD analysis should follow the emission input data shown in Table 8–2. For purposes of emissions trading, new source review and demonstrations, refer to current EPA policy and guidance to establish input data.

[a] Malfunctions which may result in excess emissions are not considered to be a normal operating condition. They generally should not be considered in determining allowable emissions. However, if the excess emissions are the result of poor maintenance, careless operation, or other preventable conditions, it may be necessary to consider them in determining source impact.

j. Line source modeling of streets and highways requires data on the width of the roadway and the median strip, the types and amounts of pollutant emissions, the number of lanes, the emissions from each lane and the height of emissions. The location of the ends of the straight roadway segments should be specified by appropriate grid coordinates. Detailed information and data requirements for modeling mobile sources of pollution are provided in the user's manuals for each of the models applicable to mobile sources.

k. The impact of growth on emissions should be considered in all modeling analyses covering existing sources. Increases in emissions due to planned expansion or planned fuel switches should be identified. Increases in emissions at individual sources that may be associated with a general industrial/commercial/residential expansion in multi-source urban areas should also be treated. For new sources the impact of growth on emissions should generally be considered for the period prior to the start-up date for the source. Such changes in emissions should treat increased area source emissions, changes in existing point source emissions which were not subject to preconstruction review, and emissions due to sources with permits to construct that have not yet started operation.

TABLE 8–1—MODEL EMISSION INPUT DATA FOR POINT SOURCES [1]

Averaging time	Emission limit (#/MMBtu) [2]	×	Operating level (MMBtu/hr) [2]	×	Operating factor (e.g., hr/yr, hr/day)
Stationary Point Source(s) Subject to SIP Emission Limit(s) Evaluation for Compliance with Ambient Standards (Including Areawide Demonstrations)					
Annual & quarterly	Maximum allowable emission limit or federally enforceable permit limit.		Actual or design capacity (whichever is greater), or federally enforceable permit condition.		Actual operating factor averaged over most recent 2 years. [3]
Short term	Maximum allowable emission limit or federally enforceable permit limit.		Actual or design capacity (whichever is greater), or federally enforceable permit condition. [4]		Continuous operation, i.e., all hours of each time period under consideration (for all hours of the meteorological data base). [5]
Nearby Source(s) [6] [7] Same input requirements as for stationary point source(s) above.					
Other Source(s) [7] If modeled (subsection 8.2.3), input data requirements are defined below.					
Annual & quarterly	Maximum allowable emission limit or federally enforceable permit limit. [6]		Annual level when actually operating, averaged over the most recent 2 years. [3]		Actual operating factor averaged over the most recent 2 years. [3]
Short term	Maximum allowable emission limit or federally enforceable permit limit. [6]		Annual level when actually operating, averaged over the most recent 2 years. [3]		Continuous operation, i.e., all hours of each time period under consideration (for all hours of the meteorological data base). [5]

[1] The model input data requirements shown on this table apply to stationary source control strategies for STATE IMPLEMENTATION PLANS. For purposes of emissions trading, new source review, or prevention of significant deterioration, other model input criteria may apply. Refer to the policy and guidance for these programs to establish the input data.

[2] Terminology applicable to fuel burning sources; analogous terminology (e.g., #/throughput) may be used for other types of sources.

[3] Unless it is determined that this period is not representative.

[4] Operating levels such as 50 percent and 75 percent of capacity should also be modeled to determine the load causing the highest concentration.

[5] If operation does not occur for all hours of the time period of consideration (e.g., 3 or 24 hours) and the source operation is constrained by a federally enforceable permit condition, an appropriate adjustment to the modeled emission rate may be made (e.g., if operation is only 8 a.m. to 4 p.m. each day, only these hours will be modeled with emissions from the source. Modeled emissions should not be averaged across non-operating time periods.)

[6] See paragraph 8.2.3(c).

[7] See paragraph 8.2.3(d).

TABLE 8–2—POINT SOURCE MODEL EMISSION INPUT DATA FOR NAAQS COMPLIANCE IN PSD DEMONSTRATIONS

Averaging time	Emission limit (#/MMBtu) [1]	×	Operating level (MMBtu/hr) [1]	×	Operating factor (e.g., hr/yr, hr/day)
Proposed Major New or Modified Source					
Annual & quarterly	Maximum allowable emission limit or federally enforceable permit limit.		Design capacity or federally enforceable permit condition.		Continuous operation (*i.e.*, 8760 hours). [2]
Short term (≤24 hours)	Maximum allowable emission limit or federally enforceable permit limit.		Design capacity or federally enforceable permit condition. [3]		Continuous operation, i.e., all hours of each time period under consideration (for all hours of the meteorological data base). [2]
Nearby Source(s) [4 6]					
Annual & quarterly	Maximum allowable emission limit or federally enforceable permit limit. [5]		Actual or design capacity (whichever is greater), or federally enforceable permit condition.		Actual operating factor averaged over the most recent 2 years. [7 8]
Short term (≤24 hours)	Maximum allowable emission limit or federally enforceable permit limit. [5]		Actual or design capacity (whichever is greater), or federally enforceable permit condition. [3]		Continuous operation, i.e., all hours of each time period under consideration (for all hours of the meteorological data base). [2]
Other Source(s) [6 9]					
Annual & quarterly	Maximum allowable emission limit or federally enforceable permit limit. [5]		Annual level when actually operating, averaged over the most recent 2 years. [7]		Actual operating factor averaged over the most recent 2 years. [7 8]
Short term (≤24 hours)	Maximum allowable emission limit or federally enforceable permit limit. [5]		Annual level when actually operating, averaged over the most recent 2 years. [7]		Continuous operation, i.e., all hours of each time period under consideration (for all hours of the meteorological data base). [2]

[1] Terminology applicable to fuel burning sources; analogous terminology (e.g., #/throughput) may be used for other types of sources.
[2] If operation does not occur for all hours of the time period of consideration (e.g., 3 or 24 hours) and the source operation is constrained by a federally enforceable permit condition, an appropriate adjustment to the modeled emission rate may be made (e.g., if operation is only 8 a.m. to 4 p.m. each day, only these hours will be modeled with emissions from the source. Modeled emissions should not be averaged across non-operating time periods.
[3] Operating levels such as 50 percent and 75 percent of capacity should also be modeled to determine the load causing the highest concentration.
[4] Includes existing facility to which modification is proposed if the emissions from the existing facility will not be affected by the modification. Otherwise use the same parameters as for major modification.
[5] See paragraph 8.2.3(c).
[6] See paragraph 8.2.3(d).
[7] Unless it is determined that this period is not representative.
[8] For those permitted sources not in operation or that have not established an appropriate factor, continuous operation (*i.e.*, 8760) should be used.
[9] Generally, the ambient impacts from non-nearby (background) sources can be represented by air quality data unless adequate data do not exist.

8.2 Background Concentrations

8.2.1 Discussion

a. Background concentrations are an essential part of the total air quality concentration to be considered in determining source impacts. Background air quality includes pollutant concentrations due to: (1) Natural sources; (2) nearby sources other than the one(s) currently under consideration; and (3) unidentified sources.

b. Typically, air quality data should be used to establish background concentrations in the vicinity of the source(s) under consideration. The monitoring network used for background determinations should conform to the same quality assurance and other requirements as those networks established for PSD purposes.[83] An appropriate data validation procedure should be applied to the data prior to use.

c. If the source is not isolated, it may be necessary to use a multi-source model to establish the impact of nearby sources. Since sources don't typically operate at their maximum allowable capacity (which may include the use of ''dirtier'' fuels), modeling is necessary to express the potential contribution of background sources, and this impact

would not be captured via monitoring. Background concentrations should be determined for each critical (concentration) averaging time.

8.2.2 Recommendations (Isolated Single Source)

a. Two options (paragraph (b) or (c) of this section) are available to determine the background concentration near isolated sources.

b. Use air quality data collected in the vicinity of the source to determine the background concentration for the averaging times of concern. Determine the mean background concentration at each monitor by excluding values when the source in question is impacting the monitor. The mean annual background is the average of the annual concentrations so determined at each monitor. For shorter averaging periods, the meteorological conditions accompanying the concentrations of concern should be identified. Concentrations for meteorological conditions of concern, at monitors not impacted by the source in question, should be averaged for each separate averaging time to determine the average background value. Monitoring sites inside a 90° sector downwind of the source may be used to determine the area of impact. One hour concentrations may be added and averaged to determine longer averaging periods.

c. If there are no monitors located in the vicinity of the source, a ''regional site'' may be used to determine background. A ''regional site'' is one that is located away from the area of interest but is impacted by similar natural and distant man-made sources.

8.2.3 Recommendations (Multi-Source Areas)

a. In multi-source areas, two components of background should be determined: contributions from nearby sources and contributions from other sources.

b. *Nearby Sources:* All sources expected to cause a significant concentration gradient in the vicinity of the source or sources under consideration for emission limit(s) should be explicitly modeled. The number of such sources is expected to be small except in unusual situations. Owing to both the uniqueness of each modeling situation and the large number of variables involved in identifying nearby sources, no attempt is made here to comprehensively define this term. Rather, identification of nearby sources calls for the exercise of professional judgement by the appropriate reviewing authority (paragraph 3.0(b)). This guidance is not intended to alter the exercise of that judgement or to comprehensively define which sources are nearby sources.

c. For compliance with the short-term and annual ambient standards, the nearby sources as well as the primary source(s) should be evaluated using an appropriate Appendix A model with the emission input data shown in Table 8–1 or 8–2. When modeling a nearby source that does not have a permit and the emission limit contained in the SIP for a particular source category is greater than the emissions possible given the source's maximum physical capacity to emit, the ''maximum allowable emission limit'' for such a nearby source may be calculated as the emission rate representative of the nearby source's maximum physical capacity to emit, considering its design specifications and allowable fuels and process materials. However, the burden is on the permit applicant to sufficiently document what the maximum physical capacity to emit is for such a nearby source.

d. It is appropriate to model nearby sources only during those times when they, by their nature, operate at the same time as the primary source(s) being modeled. Where a primary source believes that a nearby source does not, by its nature, operate at the same time as the primary source being modeled, the burden is on the primary source to demonstrate to the satisfaction of the appropriate reviewing authority (paragraph 3.0(b)) that this is, in fact, the case. Whether or not the primary source has adequately demonstrated that fact is a matter of professional judgement left to the discretion of the appropriate reviewing authority. The following examples illustrate two cases in which a nearby source may be shown not to operate at the same time as the primary source(s) being modeled. Some sources are only used during certain seasons of the year. Those sources would not be modeled as nearby sources during times in which they do not operate. Similarly, emergency backup generators that never operate simultaneously with the sources that they back up would not be modeled as nearby sources. To reiterate, in these examples and other appropriate cases, the burden is on the primary source being modeled to make the appropriate demonstration to the satisfaction of the appropriate reviewing authority.

e. The impact of the nearby sources should be examined at locations where interactions between the plume of the point source under consideration and those of nearby sources (plus natural background) can occur. Significant locations include: (1) the area of maximum impact of the point source; (2) the area of maximum impact of nearby sources; and (3) the area where all sources combine to cause maximum impact. These locations may be identified through trial and error analyses.

f. *Other Sources:* That portion of the background attributable to all other sources (e.g., natural sources, minor sources and distant major sources) should be determined by the procedures found in subsection 89.2.2 or by

application of a model using Table 8–1 or 8–2.

8.3 Meteorological Input Data

a. The meteorological data used as input to a dispersion model should be selected on the basis of spatial and climatological (temporal) representativeness as well as the ability of the individual parameters selected to characterize the transport and dispersion conditions in the area of concern. The representativeness of the data is dependent on: (1) The proximity of the meteorological monitoring site to the area under consideration; (2) the complexity of the terrain; (3) the exposure of the meteorological monitoring site; and (4) the period of time during which data are collected. The spatial representativeness of the data can be adversely affected by large distances between the source and receptors of interest and the complex topographic characteristics of the area. Temporal representativeness is a function of the year-to-year variations in weather conditions. Where appropriate, data representativeness should be viewed in terms of the appropriateness of the data for constructing realistic boundary layer profiles and three dimensional meteorological fields, as described in paragraphs (c) and (d) below.

b. Model input data are normally obtained either from the National Weather Service or as part of a site specific measurement program. Local universities, Federal Aviation Administration (FAA), military stations, industry and pollution control agencies may also be sources of such data. Some recommendations for the use of each type of data are included in this subsection.

c. Regulatory application of AERMOD requires careful consideration of minimum data for input to AERMET. Data representativeness, in the case of AERMOD, means utilizing data of an appropriate type for constructing realistic boundary layer profiles. Of paramount importance is the requirement that all meteorological data used as input to AERMOD must be both laterally and vertically representative of the transport and dispersion within the analysis domain. Where surface conditions vary significantly over the analysis domain, the emphasis in assessing representativeness should be given to adequate characterization of transport and dispersion between the source(s) of concern and areas where maximum design concentrations are anticipated to occur. The representativeness of data that were collected off-site should be judged, in part, by comparing the surface characteristics in the vicinity of the meteorological monitoring site with the surface characteristics that generally describe the analysis domain. The surface characteristics input to AERMET should be based on the topographic conditions in the vicinity of the meteorological tower. Furthermore, since the spatial scope of each variable could be different, representativeness should be judged for each variable separately. For example, for a variable such as wind direction, the data may need to be collected very near plume height to be adequately representative, whereas, for a variable such as temperature, data from a station several kilometers away from the source may in some cases be considered to be adequately representative.

d. For long range transport modeling assessments (subsection 6.2.3) or for assessments where the transport winds are complex and the application involves a non-steady-state dispersion model (subsection 7.2.8), use of output from prognostic mesoscale meteorological models is encouraged.[84 85 86] Some diagnostic meteorological processors are designed to appropriately blend available NWS comparable meteorological observations, local site specific meteorological observations, and prognostic mesoscale meteorological data, using empirical relationships, to diagnostically adjust the wind field for mesoscale and local-scale effects. These diagnostic adjustments can sometimes be improved through the use of strategically placed site specific meteorological observations. The placement of these special meteorological observations (often more than one location is needed) involves expert judgement, and is specific to the terrain and land use of the modeling domain. Acceptance for use of output from prognostic mesoscale meteorological models is contingent on concurrence by the appropriate reviewing authorities (paragraph 3.0(b)) that the data are of acceptable quality, which can be demonstrated through statistical comparisons with observations of winds aloft and at the surface at several appropriate locations.

8.3.1 Length of Record of Meteorological Data

8.3.1.1 Discussion

a. The model user should acquire enough meteorological data to ensure that worst-case meteorological conditions are adequately represented in the model results. The trend toward statistically based standards suggests a need for all meteorological conditions to be adequately represented in the data set selected for model input. The number of years of record needed to obtain a stable distribution of conditions depends on the variable being measured and has been estimated by Landsberg and Jacobs[87] for various parameters. Although that study indicates in excess of 10 years may be required to achieve stability in the frequency distributions of some meteorological variables, such long periods are not reasonable for model input data. This is due in part to the fact that hourly data in model input format are

frequently not available for such periods and that hourly calculations of concentration for long periods may be prohibitively expensive. Another study[88] compared various periods from a 17-year data set to determine the minimum number of years of data needed to approximate the concentrations modeled with a 17-year period of meteorological data from one station. This study indicated that the variability of model estimates due to the meteorological data input was adequately reduced if a 5-year period of record of meteorological input was used.

8.3.1.2 Recommendations

a. Five years of representative meteorological data should be used when estimating concentrations with an air quality model. Consecutive years from the most recent, readily available 5-year period are preferred. The meteorological data should be *adequately representative*, and may be site specific or from a nearby NWS station. Where professional judgment indicates NWS-collected ASOS (automated surface observing stations) data are inadequate {for cloud cover observations}, the most recent 5 years of NWS data that are observer-based may be considered for use.

b. The use of 5 years of NWS meteorological data or at least 1 year of site specific data is required. If one year or more (including partial years), up to five years, of site specific data is available, these data are preferred for use in air quality analyses. Such data should have been subjected to quality assurance procedures as described in subsection 8.3.3.2.

c. For permitted sources whose emission limitations are based on a specific year of meteorological data, that year should be added to any longer period being used (e.g., 5 years of NWS data) when modeling the facility at a later time.

d. For LRT situations (subsection 6.2.3) and for complex wind situations (paragraph 7.2.8(a)), if only NWS or comparable standard meteorological observations are employed, five years of meteorological data (within and near the modeling domain) should be used. Consecutive years from the most recent, readily available 5-year period are preferred. Less than five, but at least three, years of meteorological data (need not be consecutive) may be used if mesoscale meteorological fields are available, as discussed in paragraph 8.3(d). These mesoscale meteorological fields should be used in conjunction with available standard NWS or comparable meteorological observations within and near the modeling domain.

e. For solely LRT applications (subsection 6.2.3), if site specific meteorological data are available, these data may be helpful when used in conjunction with available standard NWS or comparable observations and mesoscale meteorological fields as described in paragraph 8.3.1.2(d).

f. For complex wind situations (paragraph 7.2.8(a)) where site specific meteorological data are being relied upon as the basis for characterizing the meteorological conditions, a data base of at least 1 full-year of meteorological data is required. If more data are available, they should be used. Site specific meteorological data may have to be collected at multiple locations. Such data should have been subjected to quality assurance procedures as described in paragraph 8.3.3.2(a), and should be reviewed for spatial and temporal representativeness.

8.3.2 National Weather Service Data

8.3.2.1 Discussion

a. The NWS meteorological data are routinely available and familiar to most model users. Although the NWS does not provide direct measurements of all the needed dispersion model input variables, methods have been developed and successfully used to translate the basic NWS data to the needed model input. Site specific measurements of model input parameters have been made for many modeling studies, and those methods and techniques are becoming more widely applied, especially in situations such as complex terrain applications, where available NWS data are not adequately representative. However, there are many model applications where NWS data are adequately representative, and the applications still rely heavily on the NWS data.

b. Many models use the standard hourly weather observations available from the National Climatic Data Center (NCDC). These observations are then preprocessed before they can be used in the models.

8.3.2.2 Recommendations

a. The preferred models listed in Appendix A all accept as input the NWS meteorological data preprocessed into model compatible form. If NWS data are judged to be adequately representative for a particular modeling application, they may be used. NCDC makes available surface[89 90] and upper air[91] meteorological data in CD-ROM format.

b. Although most NWS measurements are made at a standard height of 10 meters, the actual anemometer height should be used as input to the preferred model. Note that AERMOD at a minimum requires wind observations at a height above ground between seven times the local surface roughness height and 100 meters.

c. Wind directions observed by the National Weather Service are reported to the nearest 10 degrees. A specific set of randomly generated numbers has been developed for use with the preferred EPA models and should be used with NWS data to ensure a

lack of bias in wind direction assignments within the models.

d. Data from universities, FAA, military stations, industry and pollution control agencies may be used if such data are equivalent in accuracy and detail to the NWS data, and they are judged to be adequately representative for the particular application.

8.3.3 Site Specific Data

8.3.3.1 Discussion

a. Spatial or geographical representativeness is best achieved by collection of all of the needed model input data in close proximity to the actual site of the source(s). Site specific measured data are therefore preferred as model input, provided that appropriate instrumentation and quality assurance procedures are followed and that the data collected are adequately representative (free from inappropriate local or microscale influences) and compatible with the input requirements of the model to be used. It should be noted that, while site specific measurements are frequently made ''on-property'' (*i.e.*, on the source's premises), acquisition of adequately representative site specific data does not preclude collection of data from a location off property. Conversely, collection of meteorological data on a source's property does not of itself guarantee adequate representativeness. For help in determining representativeness of site specific measurements, technical guidance[92] is available. Site specific data should always be reviewed for representativeness and consistency by a qualified meteorologist.

8.3.3.2 Recommendations

a. EPA guidance[92] provides recommendations on the collection and use of site specific meteorological data. Recommendations on characteristics, siting, and exposure of meteorological instruments and on data recording, processing, completeness requirements, reporting, and archiving are also included. This publication should be used as a supplement to other limited guidance on these subjects.[83 93 94] Detailed information on quality assurance is also available.[95] As a minimum, site specific measurements of ambient air temperature, transport wind speed and direction, and the variables necessary to estimate atmospheric dispersion should be available in meteorological data sets to be used in modeling. Care should be taken to ensure that meteorological instruments are located to provide representative characterization of pollutant transport between sources and receptors of interest. The appropriate reviewing authority (paragraph 3.0(b)) is available to help determine the appropriateness of the measurement locations.

b. All site specific data should be reduced to hourly averages. Table 8–3 lists the wind related parameters and the averaging time requirements.

c. *Missing Data Substitution*. After valid data retrieval requirements have been met,[92] hours in the record having missing data should be treated according to an established data substitution protocol provided that data from an adequately representative alternative site are available. Such protocols are usually part of the approved monitoring program plan. Data substitution guidance is provided in Section 5.3 of reference 92. If no representative alternative data are available for substitution, the absent data should be coded as missing using missing data codes appropriate to the applicable meteorological pre-processor. Appropriate model options for treating missing data, if available in the model, should be employed.

d. *Solar Radiation Measurements*. Total solar radiation or net radiation should be measured with a reliable pyranometer or net radiometer, sited and operated in accordance with established site specific meteorological guidance.[92 95]

e. *Temperature Measurements*. Temperature measurements should be made at standard shelter height (2m) in accordance with established site specific meteorological guidance.[92]

f. *Temperature Difference Measurements*. Temperature difference (ΔT) measurements should be obtained using matched thermometers or a reliable thermocouple system to achieve adequate accuracy. Siting, probe placement, and operation of ΔT systems should be based on guidance found in Chapter 3 of reference 92, and such guidance should be followed when obtaining vertical temperature gradient data. AERMET employs the Bulk Richardson scheme which requires measurements of temperature difference. To ensure correct application and acceptance, AERMOD users should consult with the appropriate Reviewing Authority before using the Bulk Richardson scheme for their analysis.

g. *Winds Aloft*. For simulation of plume rise and dispersion of a plume emitted from a stack, characterization of the wind profile up through the layer in which the plume disperses is required. This is especially important in complex terrain and/or complex wind situations where wind measurements at heights up to hundreds of meters above stack base may be required in some circumstances. For tall stacks when site specific data are needed, these winds have been obtained traditionally using meteorological sensors mounted on tall towers. A feasible alternative to tall towers is the use of meteorological remote sensing instruments (e.g., acoustic sounders or radar wind profilers) to provide winds aloft, coupled with 10-meter towers to provide the near-surface winds. (For specific requirements for AERMOD and CTDMPLUS, *see* Appendix A.) Specifications

for wind measuring instruments and systems are contained in reference 92.

h. *Turbulence*. There are several dispersion models that are capable of using direct measurements of turbulence (wind fluctuations) in the characterization of the vertical and lateral dispersion (e.g., CTDMPLUS, AERMOD, and CALPUFF). For specific requirements for CTDMPLUS, AERMOD, and CALPUFF, see Appendix A. For technical guidance on measurement and processing of turbulence parameters, see reference 92. When turbulence data are used in this manner to directly characterize the vertical and lateral dispersion, the averaging time for the turbulence measurements should be one hour (Table 8–3). There are other dispersion models (e.g., BLP, and CALINE3) that employ P–G stability categories for the characterization of the vertical and lateral dispersion. Methods for using site specific turbulence data for the characterization of P–G stability categories are discussed in reference 92. When turbulence data are used in this manner to determine the P–G stability category, the averaging time for the turbulence measurements should be 15 minutes.

i. *Stability Categories*. For dispersion models that employ P–G stability categories for the characterization of the vertical and lateral dispersion, the P–G stability categories, as originally defined, couple near-surface measurements of wind speed with subjectively determined insolation assessments based on hourly cloud cover and ceiling height observations. The wind speed measurements are made at or near 10m. The insolation rate is typically assessed using observations of cloud cover and ceiling height based on criteria outlined by Turner.[70] It is recommended that the P–G stability category be estimated using the Turner method with site specific wind speed measured at or near 10m and representative cloud cover and ceiling height. Implementation of the Turner method, as well as considerations in determining representativeness of cloud cover and ceiling height in cases for which site specific cloud observations are unavailable, may be found in Section 6 of reference 92. In the absence of requisite data to implement the Turner method, the SRDT method or wind fluctuation statistics (*i.e.*, the σ_E and σ_A methods) may be used.

j. The SRDT method, described in Section 6.4.4.2 of reference 92, is modified slightly from that published from earlier work[96] and has been evaluated with three site specific data bases.[97] The two methods of stability classification which use wind fluctuation statistics, the σ_E and σ_A methods, are also described in detail in Section 6.4.4 of reference 92 (note applicable tables in Section 6). For additional information on the wind fluctuation methods, several references are available.[98 99 100 101]

k. *Meteorological Data Preprocessors*. The following meteorological preprocessors are recommended by EPA: AERMET,[102] PCRAMMET,[103] MPRM,[104] METPRO,[105] and CALMET[106] AERMET, which is patterned after MPRM, should be used to preprocess all data for use with AERMOD. Except for applications that employ AERMOD, PCRAMMET is the recommended meteorological preprocessor for use in applications employing hourly NWS data. MPRM is a general purpose meteorological data preprocessor which supports regulatory models requiring PCRAMMET formatted (NWS) data. MPRM is available for use in applications employing site specific meteorological data. The latest version (MPRM 1.3) has been configured to implement the SRDT method for estimating P–G stability categories. METPRO is the required meteorological data preprocessor for use with CTDMPLUS. CALMET is available for use with applications of CALPUFF. All of the above mentioned data preprocessors are available for downloading from EPA's Internet SCRAM Web site (subsection 2.3).

TABLE 8–3—AVERAGING TIMES FOR SITE SPECIFIC WIND AND TURBULENCE MEASUREMENTS

Parameter	Averaging time (hour)
Surface wind speed (for use in stability determinations)	1
Transport direction	1
Dilution wind speed	1
Turbulence measurements (σ_E and σ_A) for use in stability determinations	1 [1]
Turbulence measurements for direct input to dispersion models	1

[1] To minimize meander effects in σ_A when wind conditions are light and/or variable, determine the hourly average σ value from four sequential 15-minute σ's according to the following formula:

$$\sigma_{1-hr} = \sqrt{\frac{\sigma_{15}^2 + \sigma_{15}^2 + \sigma_{15}^2 + \sigma_{15}^2}{4}}$$

8.3.4 Treatment of Near-Calms and Calms

8.3.4.1 Discussion

a. Treatment of calm or light and variable wind poses a special problem in model applications since steady-state Gaussian plume models assume that concentration is inversely proportional to wind speed. Furthermore, concentrations may become unrealistically large when wind speeds less than 1 m/s are input to the model. Procedures have been developed to prevent the occurrence of overly conservative concentration estimates during periods of calms. These procedures acknowledge that a steady-state Gaussian plume model does not apply during calm conditions, and that our knowledge of wind

patterns and plume behavior during these conditions does not, at present, permit the development of a better technique. Therefore, the procedures disregard hours which are identified as calm. The hour is treated as missing and a convention for handling missing hours is recommended.

b. AERMOD, while fundamentally a steady-state Gaussian plume model, contains algorithms for dealing with low wind speed (near calm) conditions. As a result, AERMOD can produce model estimates for conditions when the wind speed may be less than 1 m/s, but still greater than the instrument threshold. Required input to AERMET, the meteorological processor for AERMOD, includes a threshold wind speed and a reference wind speed. The threshold wind speed is typically the threshold of the instrument used to collect the wind speed data. The reference wind speed is selected by the model as the lowest level of non-missing wind speed and direction data where the speed is greater than the wind speed threshold, and the height of the measurement is between seven times the local surface roughness and 100 meters. If the only valid observation of the reference wind speed between these heights is less than the threshold, the hour is considered calm, and no concentration is calculated. None of the observed wind speeds in a measured wind profile that are less than the threshold speed are used in construction of the modeled wind speed profile in AERMOD.

8.3.4.2 Recommendations

a. Hourly concentrations calculated with steady-state Gaussian plume models using calms should not be considered valid; the wind and concentration estimates for these hours should be disregarded and considered to be missing. Critical concentrations for 3-, 8-, and 24-hour averages should be calculated by dividing the sum of the hourly concentrations for the period by the number of valid or non-missing hours. If the total number of valid hours is less than 18 for 24-hour averages, less than 6 for 8-hour averages or less than 3 for 3-hour averages, the total concentration should be divided by 18 for the 24-hour average, 6 for the 8-hour average and 3 for the 3-hour average. For annual averages, the sum of all valid hourly concentrations is divided by the number of non-calm hours during the year. AERMOD has been coded to implement these instructions. For models listed in Appendix A, a post-processor computer program, CALMPRO[107] has been prepared, is available on the SCRAM Internet Web site (subsection 2.3), and should be used.

b. Stagnant conditions that include extended periods of calms often produce high concentrations over wide areas for relatively long averaging periods. The standard steady-state Gaussian plume models are often not applicable to such situations. When stagnation conditions are of concern, other modeling techniques should be considered on a case-by-case basis (see also subsection 7.2.8).

c. When used in steady-state Gaussian plume models, measured site specific wind speeds of less than 1 m/s but higher than the response threshold of the instrument should be input as 1 m/s; the corresponding wind direction should also be input. Wind observations below the response threshold of the instrument should be set to zero, with the input file in ASCII format. For input to AERMOD, no adjustment should be made to the site specific wind data. In all cases involving steady-state Gaussian plume models, calm hours should be treated as missing, and concentrations should be calculated as in paragraph (a) of this subsection.

9.0 ACCURACY AND UNCERTAINTY OF MODELS

9.1 Discussion

a. Increasing reliance has been placed on concentration estimates from models as the primary basis for regulatory decisions concerning source permits and emission control requirements. In many situations, such as review of a proposed source, no practical alternative exists. Therefore, there is an obvious need to know how accurate models really are and how any uncertainty in the estimates affects regulatory decisions. During the 1980's, attempts were made to encourage development of standardized evaluation methods.[11 108] EPA recognized the need for incorporating such information and has sponsored workshops[109] on model accuracy, the possible ways to quantify accuracy, and on considerations in the incorporation of model accuracy and uncertainty in the regulatory process. The Second (EPA) Conference on Air Quality Modeling, August 1982[110], was devoted to that subject.

b. To better deduce the statistical significance of differences seen in model performance in the face of unaccounted for uncertainties and variations, investigators have more recently explored the use of bootstrap techniques.[111 112] Work is underway to develop a new generation of evaluation metrics[16] that takes into account the statistical differences (in error distributions) between model predictions and observations.[113] Even though the procedures and measures are still evolving to describe performance of models that characterize atmospheric fate, transport and diffusion,[114 115 116] there has been general acceptance of a need to address the uncertainties inherent in atmospheric processes.

9.1.1 Overview of Model Uncertainty

a. Dispersion models generally attempt to estimate concentrations at specific sites that really represent an ensemble average of

numerous repetitions of the same event.[16] The event is characterized by measured or ''known'' conditions that are input to the models, e.g., wind speed, mixed layer height, surface heat flux, emission characteristics, etc. However, in addition to the known conditions, there are unmeasured or unknown variations in the conditions of this event, e.g., unresolved details of the atmospheric flow such as the turbulent velocity field. These unknown conditions, may vary among repetitions of the event. As a result, deviations in observed concentrations from their ensemble average, and from the concentrations estimated by the model, are likely to occur even though the known conditions are fixed. Even with a *perfect model* that predicts the correct ensemble average, there are likely to be deviations from the observed concentrations in individual repetitions of the event, due to variations in the unknown conditions. The statistics of these concentration residuals are termed ''inherent'' uncertainty. Available evidence suggests that this source of uncertainty alone may be responsible for a typical range of variation in concentrations of as much as ±50 percent.[117]

b. Moreover, there is ''reducible'' uncertainty[108] associated with the model and its input conditions; neither models nor data bases are perfect. Reducible uncertainties are caused by: (1) Uncertainties in the input values of the known conditions (*i.e.*, emission characteristics and meteorological data); (2) errors in the measured concentrations which are used to compute the concentration residuals; and (3) inadequate model physics and formulation. The ''reducible'' uncertainties can be minimized through better (more accurate and more representative) measurements and better model physics.

c. To use the terminology correctly, reference to model accuracy should be limited to that portion of reducible uncertainty which deals with the physics and the formulation of the model. The accuracy of the model is normally determined by an evaluation procedure which involves the comparison of model concentration estimates with measured air quality data.[118] The statement of accuracy is based on statistical tests or performance measures such as bias, noise, correlation, etc.[11] However, information that allows a distinction between contributions of the various elements of inherent and reducible uncertainty is only now beginning to emerge.[16] As a result most discussions of the accuracy of models make no quantitative distinction between (1) limitations of the model versus (2) limitations of the data base and of knowledge concerning atmospheric variability. The reader should be aware that statements on model accuracy and uncertainty may imply the need for improvements in model performance that even the ''perfect'' model could not satisfy.

9.1.2 Studies of Model Accuracy

a. A number of studies[119 120] have been conducted to examine model accuracy, particularly with respect to the reliability of short-term concentrations required for ambient standard and increment evaluations. The results of these studies are not surprising. Basically, they confirm what expert atmospheric scientists have said for some time: (1) Models are more reliable for estimating longer time-averaged concentrations than for estimating short-term concentrations at specific locations; and (2) the models are reasonably reliable in estimating the magnitude of highest concentrations occurring sometime, somewhere within an area. For example, errors in highest estimated concentrations of ±10 to 40 percent are found to be typical,[121 122] *i.e.*, certainly well within the often quoted factor-of-two accuracy that has long been recognized for these models. However, estimates of concentrations that occur at a specific time and site, are poorly correlated with actually observed concentrations and are much less reliable.

b. As noted above, poor correlations between paired concentrations at fixed stations may be due to ''reducible'' uncertainties in knowledge of the precise plume location and to unquantified inherent uncertainties. For example, Pasquill[123] estimates that, apart from data input errors, maximum ground-level concentrations at a given hour for a point source in flat terrain could be in error by 50 percent due to these uncertainties. Uncertainty of five to 10 degrees in the measured wind direction, which transports the plume, can result in concentration errors of 20 to 70 percent for a particular time and location, depending on stability and station location. Such uncertainties do not indicate that an estimated concentration does not occur, only that the precise time and locations are in doubt.

9.1.3 Use of Uncertainty in Decision-Making

a. The accuracy of model estimates varies with the model used, the type of application, and site specific characteristics. Thus, it is desirable to quantify the accuracy or uncertainty associated with concentration estimates used in decision-making. Communications between modelers and decision-makers must be fostered and further developed. Communications concerning concentration estimates currently exist in most cases, but the communications dealing with the accuracy of models and its meaning to the decision-maker are limited by the lack of a technical basis for quantifying and directly including uncertainty in decisions. Procedures for quantifying and interpreting uncertainty in the practical application of such concepts are only beginning to evolve; much study is still required.[108 109 110 124 125]

b. In all applications of models an effort is encouraged to identify the reliability of the model estimates for that particular area and to determine the magnitude and sources of error associated with the use of the model. The analyst is responsible for recognizing and quantifying limitations in the accuracy, precision and sensitivity of the procedure. Information that might be useful to the decision-maker in recognizing the seriousness of potential air quality violations includes such model accuracy estimates as accuracy of peak predictions, bias, noise, correlation, frequency distribution, spatial extent of high concentration, etc. Both space/time pairing of estimates and measurements and unpaired comparisons are recommended. Emphasis should be on the highest concentrations and the averaging times of the standards or increments of concern. Where possible, confidence intervals about the statistical values should be provided. However, while such information can be provided by the modeler to the decision-maker, it is unclear how this information should be used to make an air pollution control decision. Given a range of possible outcomes, it is easiest and tends to ensure consistency if the decision-maker confines his judgement to use of the ''best estimate'' provided by the modeler (*i.e.,* the design concentration estimated by a model recommended in the *Guideline* or an alternate model of known accuracy). This is an indication of the practical limitations imposed by current abilities of the technical community.

c. To improve the basis for decision-making, EPA has developed and is continuing to study procedures for determining the accuracy of models, quantifying the uncertainty, and expressing confidence levels in decisions that are made concerning emissions controls.[126 127] However, work in this area involves ''breaking new ground'' with slow and sporadic progress likely. As a result, it may be necessary to continue using the ''best estimate'' until sufficient technical progress has been made to meaningfully implement such concepts dealing with uncertainty.

9.1.4 Evaluation of Models

a. A number of actions have been taken to ensure that the best model is used correctly for each regulatory application and that a model is not arbitrarily imposed. First, the *Guideline* clearly recommends the most appropriate model be used in each case. Preferred models, based on a number of factors, are identified for many uses. General guidance on using alternatives to the preferred models is also provided. Second, the models have been subjected to a systematic performance evaluation and a peer scientific review. Statistical performance measures, including measures of difference (or residuals) such as bias, variance of difference and gross variability of the difference, and measures of correlation such as time, space, and time and space combined as recommended by the AMS Woods Hole Workshop,[11] were generally followed. Third, more specific information has been provided for justifying the site specific use of alternative models in previously cited EPA guidance,[15] and new models are under consideration and review.[16] Together these documents provide methods that allow a judgement to be made as to what models are most appropriate for a specific application. For the present, performance and the theoretical evaluation of models are being used as an indirect means to quantify one element of uncertainty in air pollution regulatory decisions.

b. EPA has participated in a series of conferences entitled, ''Harmonisation within Atmospheric Dispersion Modelling for Regulatory Purposes.''[128] for the purpose of promoting the development of improved methods for the characterization of model performance. There is a consensus developing on what should be considered in the evaluation of air quality models[129], namely quality assurance planning, documentation and scrutiny should be consistent with the intended use, and should include:

- Scientific peer review;
- Supportive analyses (diagnostic evaluations, code verification, sensitivity and uncertainty analyses);
- Diagnostic and performance evaluations with data obtained in trial locations, and
- Statistical performance evaluations in the circumstances of the intended applications.

Performance evaluations and diagnostic evaluations assess different qualities of how well a model is performing, and both are needed to establish credibility within the client and scientific community. Performance evaluations allow us to decide how well the model simulates the average temporal and spatial patterns seen in the observations, and employ large spatial/temporal scale data sets (e.g., national data sets). Performance evaluations also allow determination of relative performance of a model in comparison with alternative modeling systems. Diagnostic evaluations allow determination of a model capability to simulate individual processes that affect the results, and usually employ smaller spatial/temporal scale date sets (e.g., field studies). Diagnostic evaluations allow us to decide if we get the right answer for the right reason. The objective comparison of modeled concentrations with observed field data provides only a partial means for assessing model performance. Due to the limited supply of evaluation data sets, there are severe practical limits in assessing model performance. For this reason, the conclusions reached in the science peer reviews and the supportive analyses have particular

relevance in deciding whether a model will be useful for its intended purposes.

c. To extend information from diagnostic and performance evaluations, sensitivity and uncertainty analyses are encouraged since they can provide additional information on the effect of inaccuracies in the data bases and on the uncertainty in model estimates. Sensitivity analyses can aid in determining the effect of inaccuracies of variations or uncertainties in the data bases on the range of likely concentrations. Uncertainty analyses can aid in determining the range of likely concentration values, resulting from uncertainties in the model inputs, the model formulations, and parameterizations. Such information may be used to determine source impact and to evaluate control strategies. Where possible, information from such sensitivity analyses should be made available to the decision-maker with an appropriate interpretation of the effect on the critical concentrations.

9.2 Recommendations

a. No specific guidance on the quantification of model uncertainty for use in decision-making is being given at this time. As procedures for considering uncertainty develop and become implementable, this guidance will be changed and expanded. For the present, continued use of the ''best estimate'' is acceptable; however, in specific circumstances for O_3, PM–2.5 and regional haze, additional information and/or procedures may be appropriate.[32 33]

10.0 Regulatory Application of Models

10.1 Discussion

a. Procedures with respect to the review and analysis of air quality modeling and data analyses in support of SIP revisions, PSD permitting or other regulatory requirements need a certain amount of standardization to ensure consistency in the depth and comprehensiveness of both the review and the analysis itself. This section recommends procedures that permit some degree of standardization while at the same time allowing the flexibility needed to assure the technically best analysis for each regulatory application.

b. Dispersion model estimates, especially with the support of measured air quality data, are the preferred basis for air quality demonstrations. Nevertheless, there are instances where the performance of recommended dispersion modeling techniques, by comparison with observed air quality data, may be shown to be less than acceptable. Also, there may be no recommended modeling procedure suitable for the situation. In these instances, emission limitations may be established solely on the basis of observed air quality data as would be applied to a modeling analysis. The same care should be given to the analyses of the air quality data as would be applied to a modeling analysis.

c. The current NAAQS for SO_2 and CO are both stated in terms of a concentration not to be exceeded more than once a year. There is only an annual standard for NO_2 and a quarterly standard for Pb. Standards for fine particulate matter (PM–2.5) are expressed in terms of both long-term (annual) and short-term (daily) averages. The long-term standard is calculated using the three year average of the annual averages while the short-term standard is calculated using the three year average of the 98th percentile of the daily average concentration. For PM–10, the convention is to compare the arithmetic mean, averaged over 3 consecutive years, with the concentration specified in the NAAQS (50 $\mu g/m^3$). The 24-hour NAAQS (150 $\mu g/m^3$) is met if, over a 3-year period, there is (on average) no more than one exceedance per year. As noted in subsection 7.2.1.1, the modeled compliance for this NAAQS is based on the highest 6th highest concentration over 5 years. For ozone the short term 1-hour standard is expressed in terms of an expected exceedance limit while the short term 8-hour standard is expressed in terms of a three year average of the annual fourth highest daily maximum 8-hour value. The NAAQS are subjected to extensive review and possible revision every 5 years.

d. This section discusses general requirements for concentration estimates and identifies the relationship to emission limits. The following recommendations apply to: (1) Revisions of State Implementation Plans and (2) the review of new sources and the prevention of significant deterioration (PSD).

10.2 Recommendations

10.2.1 Analysis Requirements

a. Every effort should be made by the Regional Office to meet with all parties involved in either a SIP revision or a PSD permit application prior to the start of any work on such a project. During this meeting, a protocol should be established between the preparing and reviewing parties to define the procedures to be followed, the data to be collected, the model to be used, and the analysis of the source and concentration data. An example of requirements for such an effort is contained in the Air Quality Analysis Checklist posted on EPA's Internet SCRAM Web site (subsection 2.3). This checklist suggests the level of detail required to assess the air quality resulting from the proposed action. Special cases may require additional data collection or analysis and this should be determined and agreed upon at this preapplication meeting. The protocol should be written and agreed upon by the parties concerned, although a formal legal document

is not intended. Changes in such a protocol are often required as the data collection and analysis progresses. However, the protocol establishes a common understanding of the requirements.

b. An air quality analysis should begin with a screening model to determine the potential of the proposed source or control strategy to violate the PSD increment or NAAQS. For traditional stationary sources, EPA guidance[24] should be followed. Guidance is also available for mobile sources.[48]

c. If the concentration estimates from screening techniques indicate a significant impact or that the PSD increment or NAAQS may be approached or exceeded, then a more refined modeling analysis is appropriate and the model user should select a model according to recommendations in Sections 4–8. In some instances, no refined technique may be specified in this guide for the situation. The model user is then encouraged to submit a model developed specifically for the case at hand. If that is not possible, a screening technique may supply the needed results.

d. Regional Offices should require permit applicants to incorporate the pollutant contributions of all sources into their analysis. Where necessary this may include emissions associated with growth in the area of impact of the new or modified source. PSD air quality assessments should consider the amount of the allowable air quality increment that has already been consumed by other sources. Therefore, the most recent source applicant should model the existing or permitted sources in addition to the one currently under consideration. This would permit the use of newly acquired data or improved modeling techniques if such have become available since the last source was permitted. When remodeling, the worst case used in the previous modeling analysis should be one set of conditions modeled in the new analysis. All sources should be modeled for each set of meteorological conditions selected.

10.2.2 Use of Measured Data in Lieu of Model Estimates

a. Modeling is the preferred method for determining emission limitations for both new and existing sources. When a preferred model is available, model results alone (including background) are sufficient. Monitoring will normally not be accepted as the sole basis for emission limitation. In some instances when the modeling technique available is only a screening technique, the addition of air quality data to the analysis may lend credence to model results.

b. There are circumstances where there is no applicable model, and measured data may need to be used. However, only in the case of a NAAQS assessment for an existing source should monitoring data alone be a basis for emission limits. In addition, the following items (i-vi) should be considered prior to the acceptance of the measured data:

i. Does a monitoring network exist for the pollutants and averaging times of concern?

ii. Has the monitoring network been designed to locate points of maximum concentration?

iii. Do the monitoring network and the data reduction and storage procedures meet EPA monitoring and quality assurance requirements?

iv. Do the data set and the analysis allow impact of the most important individual sources to be identified if more than one source or emission point is involved?

v. Is at least one full year of valid ambient data available?

vi. Can it be demonstrated through the comparison of monitored data with model results that available models are not applicable?

c. The number of monitors required is a function of the problem being considered. The source configuration, terrain configuration, and meteorological variations all have an impact on number and placement of monitors. Decisions can only be made on a case-by-case basis. Guidance is available for establishing criteria for demonstrating that a model is not applicable?

d. Sources should obtain approval from the appropriate reviewing authority (paragraph 3.0(b)) for the monitoring network prior to the start of monitoring. A monitoring protocol agreed to by all concerned parties is highly desirable. The design of the network, the number, type and location of the monitors, the sampling period, averaging time as well as the need for meteorological monitoring or the use of mobile sampling or plume tracking techniques, should all be specified in the protocol and agreed upon prior to start-up of the network.

10.2.3 Emission Limits

10.2.3.1 Design Concentrations

a. Emission limits should be based on concentration estimates for the averaging time that results in the most stringent control requirements. The concentration used in specifying emission limits is called the design value or design concentration and is a sum of the concentration contributed by the primary source, other applicable sources, and—for NAAQS assessments—the background concentration.

b. To determine the averaging time for the design value, the most restrictive NAAQS or PSD increment, as applicable, should be identified. For a NAAQS assessment, the averaging time for the design value is determined by calculating, for each averaging time, the ratio of the difference between the applicable NAAQS (S) and the background concentration (B) to the (model) predicted concentration (P) (*i.e.*, (S–B)/P). For a PSD

increment assessment, the averaging time for the design value is determined by calculating, for each averaging time, the ratio of the applicable PSD increment (I) and the model-predicted concentration (P) (*i.e.*, I/P). The averaging time with the lowest ratio identifies the most restrictive standard or increment. If the annual average is the most restrictive, the highest estimated annual average concentration from one or a number of years of data is the design value. When short term standards are most restrictive, it may be necessary to consider a broader range of concentrations than the highest value. For example, for pollutants such as SO_2, the highest, second-highest concentration is the design value. For pollutants with statistically based NAAQS, the design value is found by determining the more restrictive of: (1) The short-term concentration over the period specified in the standard, or (2) the long-term concentration that is not expected to exceed the long-term NAAQS. Determination of design values for PM–10 is presented in more detail in EPA guidance.[34]

10.2.3.2 NAAQS Analyses for New or Modified Sources

a. For new or modified sources predicted to have a significant ambient impact[83] and to be located in areas designated attainment or unclassifiable for the SO_2, Pb, NO_2, or CO NAAQS, the demonstration as to whether the source will cause or contribute to an air quality violation should be based on: (1) The highest estimated annual average concentration determined from annual averages of individual years; or (2) the highest, second-highest estimated concentration for averaging times of 24-hours or less; and (3) the significance of the spatial and temporal contribution to any modeled violation. For Pb, the highest estimated concentration based on an individual calendar quarter averaging period should be used. Background concentrations should be added to the estimated impact of the source. The most restrictive standard should be used in all cases to assess the threat of an air quality violation. For new or modified sources predicted to have a significant ambient impact[83] in areas designated attainment or unclassifiable for the PM–10 NAAQS, the demonstration of whether or not the source will cause or contribute to an air quality violation should be based on sufficient data to show whether: (1) The projected 24-hour average concentrations will exceed the 24-hour NAAQS more than once per year, on average; (2) the expected (*i.e.*, average) annual mean concentration will exceed the annual NAAQS; and (3) the source contributes significantly, in a temporal and spatial sense, to any modeled violation.

10.2.3.3 PSD Air Quality Increments and Impacts

a. The allowable PSD increments for criteria pollutants are established by regulation and cited in 40 CFR 51.166. These maximum allowable increases in pollutant concentrations may be exceeded once per year at each site, except for the annual increment that may not be exceeded. The highest, second-highest increase in estimated concentrations for the short term averages as determined by a model should be less than or equal to the permitted increment. The modeled annual averages should not exceed the increment.

b. Screening techniques defined in subsection 4.2.1 can sometimes be used to estimate short term incremental concentrations for the first new source that triggers the baseline in a given area. However, when multiple increment-consuming sources are involved in the calculation, the use of a refined model with at least 1 year of site specific or 5 years of (off-site) NWS data is normally required (subsection 8.3.1.2). In such cases, sequential modeling must demonstrate that the allowable increments are not exceeded temporally and spatially, *i.e.*, for all receptors for each time period throughout the year(s) (time period means the appropriate PSD averaging time, e.g., 3-hour, 24-hour, *etc.*).

c. The PSD regulations require an estimation of the SO_2, particulate matter (PM–10), and NO_2 impact on any Class I area. Normally, steady-state Gaussian plume models should not be applied at distances greater than can be accommodated by the steady state assumptions inherent in such models. The maximum distance for refined steady-state Gaussian plume model application for regulatory purposes is generally considered to be 50km. Beyond the 50km range, screening techniques may be used to determine if more refined modeling is needed. If refined models are needed, long range transport models should be considered in accordance with subsection 6.2.3. As previously noted in Sections 3 and 7, the need to involve the Federal Land Manager in decisions on potential air quality impacts, particularly in relation to PSD Class I areas, cannot be overemphasized.

11.0 BIBLIOGRAPHY[A]

American Meteorological Society. Symposia on Turbulence, Diffusion, and Air Pollution (1st–10th); 1971–1992. Symposia on Boundary Layers & Turb. 11th–12th; 1995–1997. Boston, MA.

[a] The documents listed here are major sources of supplemental information on the theory and application of mathematical air quality models.

American Meteorological Society, 1977–1998. Joint Conferences on Applications of Air Pollution Meteorology (1st–10th). Sponsored by the American Meteorological Society and the Air & Waste Management Association. Boston, MA.

American Meteorological Society, 1978. Accuracy of Dispersion Models. *Bulletin of the American Meteorological Society*, 59(8): 1025–1026.

American Meteorological Society, 1981. Air Quality Modeling and the Clean Air Act: Recommendations to EPA on Dispersion Modeling for Regulatory Applications. Boston, MA.

Briggs, G.A., 1969. Plume Rise. U.S. Atomic Energy Commission Critical Review Series, Oak Ridge National Laboratory, Oak Ridge, TN.

Drake, R.L. and S.M. Barrager, 1979. Mathematical Models for Atmospheric Pollutants. EPRI EA–1131. Electric Power Research Institute, Palo Alto, CA.

Environmental Protection Agency, 1978. Workbook for Comparison of Air Quality Models. Publication No. EPA–450/2–78–028a and b. Office of Air Quality Planning & Standards, Research Triangle Park, NC.

Erisman J.W., Van Pul A. and Wyers P. (1994) Parameterization of surface resistance for the quantification of atmospheric deposition of acidifying pollutants and ozone. *Atmos. Environ.*, 28: 2595–2607.

Fox, D.G., and J.E. Fairobent, 1981. NCAQ Panel Examines Uses and Limitations of Air Quality Models. *Bulletin of the American Meteorological Society*, 62(2): 218–221.

Gifford, F.A., 1976. Turbulent Diffusion Typing Schemes: A Review. *Nuclear Safety*, 17(1): 68–86.

Gudiksen, P.H., and M.H. Dickerson, Eds., Executive Summary: Atmospheric Studies in Complex Terrain Technical Progress Report FY–1979 Through FY–1983. Lawrence Livermore National Laboratory, Livermore, CA. (Docket Reference No. II–I–103).

Hanna, S.R., G.A. Briggs, J. Deardorff, B.A. Egan, G.A. Gifford and F. Pasquill, 1977. AMS Workshop on Stability Classification Schemes And Sigma Curves—Summary of Recommendations. *Bulletin of the American Meteorological Society*, 58(12): 1305–1309.

Hanna, S.R., G.A. Briggs and R.P. Hosker, Jr., 1982. Handbook on Atmospheric Diffusion. Technical Information Center, U.S. Department of Energy, Washington, D.C.

Haugen, D.A., Workshop Coordinator, 1975. Lectures on Air Pollution and Environmental Impact Analyses. Sponsored by the American Meteorological Society, Boston, MA.

Hoffnagle, G.F., M.E. Smith, T.V. Crawford and T.J. Lockhart, 1981. On-site Meteorological Instrumentation Requirements to Characterize Diffusion from Point Sources—A Workshop, 15–17 January 1980, Raleigh, NC. *Bulletin of the American Meteorological Society*, 62(2): 255–261.

Hunt, J.C.R., R.G. Holroyd, D.J. Carruthers, A.G. Robins, D.D. Apsley, F.B. Smith and D.J. Thompson, 1990. Developments in Modeling Air Pollution for Regulatory Uses. *In* Proceedings of the 18th NATO/CCMS International Technical Meeting on Air Pollution Modeling and its Application, Vancouver, Canada. Also *In* Air Pollution Modeling and its Application VIII (1991). H. van Dop and D.G. Steyn, eds. Plenum Press, New York, NY. pp. 17–59

Pasquill, F. and F.B. Smith, 1983. Atmospheric Diffusion, 3rd Edition. Ellis Horwood Limited, Chichester, West Sussex, England, 438pp.

Randerson, D., Ed., 1984. Atmospheric Science and Power Production. DOE/TIC 27601. Office of Scientific and Technical Information, U.S. Department of Energy, Oak Ridge, TN.

Scire, J.S. and L.L. Schulman, 1980: Modeling plume rise from low-level buoyant line and point sources. AMS/APCA Second Joint Conference on Applications of Air Pollution Meteorology, March 24–27, New Orleans, LA.

Smith, M.E., Ed., 1973. Recommended Guide for the Prediction of the Dispersion of Airborne Effluents. The American Society of Mechanical Engineers, New York, NY.

Stern, A.C., Ed., 1976. *Air Pollution, Third Edition, Volume I: Air Pollutants, Their Transformation and Transport*. Academic Press, New York, NY.

Turner, D.B., 1979. Atmospheric Dispersion Modeling: A Critical Review. *Journal of the Air Pollution Control Association*, 29(5): 502–519.

Venkatram, A. and J.C. Wyngaard, Editors, 1988. *Lectures on Air Pollution Modeling*. American Meteorological Society, Boston, MA. 390pp.

12.0 References

1. Code of Federal Regulations; Title 40 (Protection of Environment). Sections 51.112, 51.117, 51.150, 51.160.

2. Environmental Protection Agency, 1990. New Source Review Workshop Manual: Prevention of Significant Deterioration and Nonattainment Area Permitting (Draft). Office of Air Quality Planning & Standards, Research Triangle Park, NC. (Available at: *http://www.epa.gov/ttn/nsr/*)

3. Code of Federal Regulations; Title 40 (Protection of Environment). Sections 51.166 and 52.21.

4. Code of Federal Regulations (Title 40, Part 50): Protection of the Environment; National Primary and Secondary Ambient Air Quality Standards.

5. Environmental Protection Agency, 1988. Model Clearinghouse: Operational Plan (Revised). Staff Report. Office of Air Quality Planning & Standards, Research Triangle Park, NC. (Docket No. A–88–04, II–J–1)

6. Environmental Protection Agency, 1980. Guidelines on Air Quality Models. FEDERAL REGISTER, 45(61): 20157–20158.

7. Scire, J.S. and L.L. Schulman, 1981. Evaluation of the BLP and ISC Models with SF6 Tracer Data and SO_2 Measurements at Aluminum Reduction Plants. APCA Specialty Conference on Dispersion Modeling for Complex Sources, St. Louis, MO.

8. Environmental Protection Agency, 1986. Evaluation of Mobile Source Air Quality Simulation Models. Publication No. EPA–450/4–86–002. Office of Air Quality Planning & Standards, Research Triangle Park, NC. (NTIS No. PB 86–167293)

9. Strimaitis, D.G., J.S. Scire and J.C. Chang. 1998. Evaluation of the CALPUFF Dispersion Model with Two Power Plant Data Sets. Tenth Joint Conference on the Application of Air Pollution Meteorology, Phoenix, Arizona. American Meteorological Society, Boston, MA. January 11–16, 1998.

10. Environmental Protection Agency, 2003. AERMOD: Latest Features and Evaluation Results. Publication No. EPA–454/R–03–003. U.S. Environmental Protection Agency, Research Triangle Park, NC. (Available at *http://www.epa.gov/scram001/*)

11. Fox, D.G., 1981. Judging Air Quality Model Performance. *Bulletin of the American Meteorological Society*, 62(5): 599–609.

12. American Meteorological Society, 1983. Synthesis of the Rural Model Reviews. Publication No. EPA–600/3–83–108. Office of Research & Development, Research Triangle Park, NC. (NTIS No. PB 84–121037)

13. Allwine, K.J., W.F. Dabberdt and L.L. Simmons. 1998. Peer Review of the CALMET/CALPUFF Modeling System. Prepared by the KEVRIC Company, Inc. under EPA Contract No. 68–D–98–092 for Environmental Protection Agency, Research Triangle Park, NC. (Docket No. A–99–05, II–A–8)

14. Hanna, S., M. Garrison and B. Turner, 1998. AERMOD Peer Review report. Prepared by SAI, Inc. under EPA Contract No. 68–D6–0064/1–14 for Environmental Protection Agency, Research Triangle Park, NC. 12pp. & appendices (Docket No. A–99–05, II–A–6)

15. Environmental Protection Agency, 1992. Protocol for Determining the Best Performing Model. Publication No. EPA–454/R–92–025. Office of Air Quality Planning & Standards, Research Triangle Park, NC. (NTIS No. PB 93–226082)

16. ASTM D6589: Standard Guide for Statistical Evaluation of Atmospheric Dispersion Model Performance. (2000)

17. Environmental Protection Agency, 1995. User's Guide for the Industrial Source Complex (ISC3) Dispersion Models, Volumes 1 and 2. Publication Nos. EPA–454/B–95–003a & b. U.S. Environmental Protection Agency, Research Triangle Park, NC. (NTIS Nos. PB 95–222741 and PB 95–222758, respectively)

18. Hanna, S.R. and R.J. Paine, 1989. Hybrid Plume Dispersion Model (HPDM) Development and Evaluation. *J. Appl. Meteorol.*, 28: 206–224.

19. Hanna, S.R. and J.C. Chang, 1992. Boundary layer parameterizations for applied dispersion modeling over urban areas. Bound. Lay. Meteorol., 58, 229–259.

20. Hanna, S.R. and J.C. Chang, 1993. Hybrid Plume Dispersion Model (HPDM) Improvements and Testing at Three Field Sites. Atmos. Environ., 27A: 1491–1508.

21. American Meteorological Society, 1984. Workshop on Updating Applied Diffusion Models. 24–27 January 1984. Clearwater, Florida. J. Climate and Appl. Met., 24(11): 1111–1207.

22. Environmental Protection Agency, 2002. AERMOD: Description of Model Formulation. Research Triangle Park, NC. EPA Report No. EPA–454/R–02–002d; April 2002; AND Cimorelli, A. *et al.*, 2005. AERMOD: A Dispersion Model for Industrial Source Applications. Part I: General Model Formulation and Boundary Layer Characterization. *Journal of Applied Meteorology*, 44(5): 682–693.

23. L.L. Schulman, D.G. Strimaitis and J.S. Scire, 2002. Development and evaluation of the PRIME plume rise and building downwash model. *Journal of the Air & Waste Management Association*, 50: 378–390.

24. Environmental Protection Agency, 1992. Screening Procedures for Estimating the Air Quality Impact of Stationary Sources, Revised. Publication No. EPA–454/R–92–019. U.S. Environmental Protection Agency, Research Triangle Park, NC. (NTIS No. PB 93–219095)

25. Environmental Protection Agency, 1995. SCREEN3 User's Guide. Publication No. EPA–454/B–95–004. U.S. Environmental Protection Agency, Research Triangle Park, NC. (NTIS No. PB 95–222766)

26. Perry, S.G., D.J. Burns and A.J. Cimorelli, 1990. User's Guide to CTDMPLUS: Volume 2. The Screening Mode (CTSCREEN). Publication No. EPA–600/8–90–087. U.S. Environmental Protection Agency, Research Triangle Park, NC. (NTIS No. PB 91–136564)

27. Mills, M.T., R.J. Paine, E.A. Insley and B.A. Egan, 1987. The Complex Terrain Dispersion Model Terrain Preprocessor System—User's Guide and Program Description. Publication No. EPA–600/8–88–003. U.S. Environmental Protection Agency, Research Triangle Park, NC. (NTIS No. PB 88–162094)

28. Burns, D.J., S.G. Perry and A.J. Cimorelli, 1991. An Advanced Screening Model for Complex Terrain Applications. Paper presented at the 7th Joint Conference on Applications of Air Pollution Meteorology (cosponsored by the American Meteorological Society and the Air & Waste Management Association), January 13–18, 1991, New Orleans, LA.

29. Environmental Research and Technology, 1987. User's Guide to the Rough Terrain Diffusion Model (RTDM), Rev. 3.20. ERT Document No. P–D535–585. Environmental

Research and Technology, Inc., Concord, MA. (NTIS No. PB 88–171467)

30. Meng, Z.D. Dabdub and J.H. Seinfeld, 1997. Chemical Coupling between Atmospheric Ozone and Particulate Matter. *Science*, 277: 116–119.

31. Hidy, G.M, P.M. Roth, J.M. Hales and R.D. Scheffe, 1998. Fine Particles and Oxidant Pollution: Developing an Agenda for Cooperative Research. *JAWMA*, 50: 613–632.

32. Environmental Protection Agency, 2005. Guidance on the Use of Models and Other Analyses in Attainment Demonstrations for the 8-hr Ozone NAAQS (Draft Final). Office of Air Quality Planning & Standards, Research Triangle Park, NC. (Latest version available on SCRAM Web site as *draft-final-O3.pdf*; *see* subsection 2.3)

33. Environmental Protection Agency, 2005. Guidance on the Use of Models and Other Analyses in Attainment Demonstrations for the PM–2.5 NAAQS and Regional Haze Goals. Office of Air Quality Planning & Standards, Research Triangle Park, NC. (As of May 2005, this document has not been finalized; latest version available on SCRAM Web site as *draft-pm.pdf; see* subsection 2.3)

34. Environmental Protection Agency, 1987. PM–10 SIP Development Guideline. Publication No. EPA–450/2–86–001. Office of Air Quality Planning & Standards, Research Triangle Park, NC. (NTIS No. PB 87–206488)

35. U.S. Forest Service, 1996. User Assessment of Smoke-Dispersion Models for Wildland Biomass Burning. USDA, Pacific Northwest Research Station, Portland, OR. General Technical Report PNW–GTR–379. 30pp. (NTIS No. PB 97–163380)

36. Hanrahan, P.L., 1999. The Polar Volume Polar Ratio Method for Determining NO_2 / NO_X Ratios in Modeling—Part I: Methodology. *J. Air & Waste Manage. Assoc.*, 49: 1324–1331.

37. Environmental Protection Agency, 1997. Guidance for Siting Ambient Air Monitors around Stationary Lead Sources. Publication No. EPA–454/R–92–009R. Office of Air Quality Planning & Standards, Research Triangle Park, NC. (NTIS No. PB 97–208094)

38. Environmental Protection Agency, 1993. Lead Guideline Document. Publication No. EPA–452/R–93–009. Office of Air Quality Planning & Standards, Research Triangle Park, NC. (NTIS No. PB 94–111846)

39. Environmental Protection Agency, 1998. EPA Third-Generation Air Quality Modeling System. Models-3, Volume 9b: User Manual. Publication No. EPA–600/R–98/069(b). Office of Research and Development, Washington, D.C.

40. Gery, M.W. and R.R. Crouse, 1991. User's Guide for Executing OZIPR. Publication No. EPA–600/8–90–069. Office of Research & Development, Research Triangle Park, NC. (NTIS No. PB 91–175877)

41. Environmental Protection Agency, 2002. User's Guide to the Regulatory Modeling System for Aerosols and Deposition (REMSAD) Version 7. Prepared for Environmental Protection Agency under Contract No. GS–10F–0124J by ICF Consulting, July 2002. (Available at *http://www.epa.gov/scram001/*)

42. Environmental Protection Agency, 2004. EPA–CMB8.2 Users Manual. Publication No. EPA–452/R–04–011. Office of Air Quality Planning & Standards, Research Triangle Park, NC; December 2004. (Available at *http://www.ega.gov/scram001/*)

43. Environmental Protection Agency, 2004. Protocol for Applying and Validating the CMB Model for $PM_{2.5}$ and VOC. Publication No. EPA–451/R–04–001. Office of Air Quality Planning & Standards, Research Triangle Park, NC; December 2004. (Available at *http://www.ega.gov/scram001/*)

44. Environmental Protection Agency, 1988. Chemical Mass Balance Model Diagnostics. Publication No. EPA–450/4–88–005. Office of Air Quality Planning & Standards, Research Triangle Park, NC. (NTIS No. PB 88–208319)

45. Paatero, P. and U. Tapper, 1994. Positive Matrix Factorization: A Non-negative Factor Model with Optimal Utilization of Error Estimates of Data Values. *Environmetrics*, 5: 111–126. (Other documents related to PMF may be accessed via FTP at *ftp://rock.helsinki.fi/pub/misc/pmf*.)

46. Lewis, C.W., G.A. Norris, R.C. Henry and T.L. Conner, 2003. Source Apportionment of Phoenix PM–2.5 Aerosol with the Unmix Receptor Model. *Journal of the Air & Waste Management Association*, 53(3): 325–338.

47. Environmental Protection Agency, 1994. Guidelines for PM10 Sampling and Analysis Applicable to Receptor Modeling. Publication No. EPA–452/R–94–009. Office of Air Quality Planning & Standards, Research Triangle Park, NC. (NTIS No. PB 94–177441)

48. Environmental Protection Agency, 1992. Guideline for Modeling Carbon Monoxide from Roadway Intersections. Publication No. EPA–454/R–92–005. Office of Air Quality Planning & Standards, Research Triangle Park, NC. (NTIS No. PB 93–210391)

49. Environmental Protection Agency, 1992. User's Guide for CAL3QHC Version 2: A Modeling Methodology for Predicting Pollutant Concentrations near Roadway Intersections. Publication No. EPA–454/R–92–006. Office of Air Quality Planning & Standards, Research Triangle Park, NC. (NTIS No. PB 93–210250)

50. Environmental Protection Agency, 1992. Evaluation of CO Intersection Modeling techniques Using a New York City Database. Publication No. EPA–454/R–92–004. Office of Air Quality Planning & Standards, RTP, NC 27711. (NTIS No. PB 93–105559)

51. Environmental Protection Agency, 1995. Addendum to the User's Guide to CAL3QHC Version 2.0. Staff Report. Office of Air Quality Planning & Standards, Research Triangle Park, NC. (Available at *http://www.epa.gov/scram001/*)

52. Shannon, J.D., 1987. Mobile Source Modeling Review. A report prepared under a cooperative agreement with the Environmental Protection Agency. 5pp. (Docket No. A–88–04, II–J–2)

53. Environmental Protection Agency, 1991. Emission Inventory Requirements for Carbon Monoxide State Implementation Plans. Publication No. EPA–450/4–91–011. Office of Air Quality Planning & Standards, Research Triangle Park, NC. (NTIS No. PB 92–112150)

54. Environmental Protection Agency, 1992. Guideline for Regulatory Application of the Urban Airshed Model for Areawide Carbon Monoxide. Publication No. EPA–450/4–92–011a and b. Office of Air Quality Planning & Standards, Research Triangle Park, NC. (NTIS Nos. PB 92–213222 and PB 92–213230)

55. Environmental Protection Agency, 1992. Technical Support Document to Aid States with the Development of Carbon Monoxide State Implementation Plans. Publication No. EPA–452/R–92–003. Office of Air Quality Planning & Standards, Research Triangle Park, NC. (NTIS No. PB 92–233055)

56. Chu, S.H. and E.L. Meyer, 1991. Use of Ambient Ratios to Estimate Impact of NO_x Sources on Annual NO_2 Concentrations. Proceedings, 84th Annual Meeting & Exhibition of the Air & Waste Management Association, Vancouver, B.C.; 16–21 June 1991. (16pp.) (Docket No. A–92–65, II–A–9)

57. Cole, H.S. and J.E. Summerhays, 1979. A Review of Techniques Available for Estimation of Short-Term NO_2 Concentrations. *Journal of the Air Pollution Control Association*, 29(8): 812–817.

58. U.S. Department of Housing and Urban Development, 1980. Air Quality Considerations in Residential Planning. U.S. Superintendent of Documents, Washington, DC. (GPO Order Nos. 023–000–00577–8, 023–000–00576–0, 023–000–00575–1)

59. Environmental Protection Agency, 1986. Evaluation of Short-Term Long-Range Transport Models, Volumes I and II. Publication Nos. EPA–450/4–86–016a and b. Office of Air Quality Planning & Standards, Research Triangle Park, NC. (NTIS Nos. PB 87–142337 and PB 87–142345)

60. Environmental Protection Agency, 1998. Interagency Workgroup on Air Quality Modeling (IWAQM) Phase 2 Summary Report and Recommendations for Modeling Long-Range Transport Impacts. Publication No. EPA–454/R–98–019. Office of Air Quality Planning & Standards, Research Triangle Park, NC.(NTIS No. PB 99–121089)

61. National Acid Precipitation Assessment Program (NAPAP), 1991. Acid Deposition: State of Science and Technology. Volume III Terrestrial, Materials, Health and Visibility Effects. Report 24, *Visibility: Existing and Historical Conditions—Causes and Effects* Edited by Patricia M. Irving. Washington, DC 129pp.

62. National Research Council, 1993. Protecting Visibility in National Parks and Wilderness Areas. National Academy Press, Washington, DC 446pp.

63. Environmental Protection Agency, 1992. Workbook for Plume Visual Impact Screening and Analysis (Revised). Publication No. EPA–454/R–92–023. Office of Air Quality Planning & Standards, Research Triangle Park, NC. (NTIS No. PB 93–223592)

64. Environmental Protection Agency, 1981. Guideline for Use of Fluid Modeling to Determine Good Engineering Practice (GEP) Stack Height. Publication No. EPA–450/4–81–003. Office of Air Quality Planning & Standards, Research Triangle Park, NC. (NTIS No. PB 82–145327)

65. Lawson, Jr., R.E. and W.H. Snyder, 1983. Determination of Good Engineering Practice Stack Height: A Demonstration Study for a Power Plant. Publication No. EPA–600/3–83–024. Office of Research & Development, Research Triangle Park, NC. (NTIS No. PB 83–207407)

66. Environmental Protection Agency, 1985. Guideline for Determination of Good Engineering Practice Stack Height (Technical Support Document for the Stack Height Regulations), Revised. Publication No. EPA–450/4–80–023R. Office of Air Quality Planning & Standards, Research Triangle Park, NC. (NTIS No. PB 85–225241)

67. Snyder, W.H. and R.E. Lawson, Jr., 1985. Fluid Modeling Demonstration of Good Engineering-Practice Stack Height in Complex Terrain. Publication No. EPA–600/3–85–022. Office of Research & Development, Research Triangle Park, NC. (NTIS No. PB 85–203107)

68. Bennett, M.J, M.E. Yansura, I.G. Hornyik, J.M. Nall, D.G. Caniparoli and C.G. Ashmore, 2002. Evaluation of the CALPUFF Long-range Transport Screening Technique by Comparison to Refined CALPUFF Results for Several Power Plants in Both the Eastern and Western United States. Proceedings of the Air & Waste Management Association's 95th Annual Conference, June 23–27, 2002; Baltimore, MD. Paper #43454.

69. Environmental Protection Agency, 1999. Guideline of Data Handling Conventions for the PM NAAQS. Publication No. EPA–454/R–99–008. Office of Air Quality Planning & Standards, Research Triangle Park. (NTIS PB 99–149023)

70. Turner, D.B., 1969. Workbook of Atmospheric Dispersion Estimates. PHS Publication No. 999–AP–26. U.S. Department of Health, Education and Welfare, Public Health Service, Cincinnati, OH. (NTIS No. PB–191482)

71. McElroy, J.L. and F. Pooler, Jr., 1968. St. Louis Dispersion Study, Volume II—Analysis. National Air Pollution Control Administration Publication No. AP–53, U.S. Department of Health, Education and Welfare, Public Health Service, Arlington, VA. (NTIS No. PB–190255)

72. Irwin, J.S., 1978. Proposed Criteria for Selection of Urban Versus Rural Dispersion

Coefficients. (Draft Staff Report). Meteorology and Assessment Division, U.S. Environmental Protection Agency, Research Triangle Park, NC. (Docket No. A–80–46, II-B–8)

73. Auer, Jr., A.H., 1978. Correlation of Land Use and Cover with Meteorological Anomalies. *Journal of Applied Meteorology*, 17(5): 636–643.

74. Pasquill, F., 1976. Atmospheric Dispersion Parameters in Gaussian Plume Modeling, Part II. Possible Requirements for Change in the Turner Workbook Values. Publication No. EPA–600/4–76–030b. Office of Research & Development, Research Triangle Park, NC. (NTIS No. PB–258036/3BA)

75. Turner, D.B., 1964. A Diffusion Model for an Urban Area. *Journal of Applied Meteorology*, 3(1): 83–91.

76. Briggs, G.A., 1975. Plume Rise Predictions. Chapter 3 in Lectures on Air Pollution and Environmental Impact Analyses. American Meteorological Society, Boston, MA; pp. 59–111.

77. Hanna, S.R., G.A. Briggs and R.P. Hosker, Jr., 1982. Plume Rise. Chapter 2 in *Handbook on Atmospheric Diffusion*. Technical Information Center, U.S. Department of Energy, Washington, DC; pp. 11–24. DOE/TIC–11223 (DE 82002045)

78. Weil, J.C., L.A. Corio and R.P. Brower, 1997. A PDF dispersion model for buoyant plumes in the convective boundary layer. *Journal of Applied Meteorology*, 36: 982–1003.

79. Stull, R.B., 1988. An Introduction to Boundary Layer Meteorology. Kluwer Academic Publishers, Boston, MA. 666pp.

80. Environmental Protection Agency, 1988. User's Guide to SDM—A Shoreline Dispersion Model. Publication No. EPA–450/4–88–017. Office of Air Quality Planning & Standards, Research Triangle Park, NC. (NTIS No. PB 89–164305)

81. Environmental Protection Agency, 1987. Analysis and Evaluation of Statistical Coastal Fumigation Models. Publication No. EPA–450/4–87–002. Office of Air Quality Planning & Standards, Research Triangle Park, NC. (NTIS No. PB 87–175519)

82. Environmental Protection Agency, 1995. Compilation of Air Pollutant Emission Factors, Volume I: Stationary Point and Area Sources (Fifth Edition, AP–42: GPO Stock No. 055–000–00500–1), and Supplements A–D; Volume II: Mobile Sources (Fifth Edition). Office of Air Quality Planning & Standards, Research Triangle Park, NC. Volume I can be downloaded from EPA's Internet Web site at *http://www.epa.gov/ttn/chief/ap42.html*; Volume II can be downloaded from *http://www.epa.gov/omswww/ap42.htm*

83. Environmental Protection Agency, 1987. Ambient Air Monitoring Guidelines for Prevention of Significant Deterioration (PSD). Publication No. EPA–450/4–87–007. Office of Air Quality Planning & Standards, Research Triangle Park, NC. (NTIS No. PB 90–168030)

84. Stauffer, D.R. and Seaman, N.L., 1990. Use of four-dimensional data assimilation in a limited-area mesoscale model. Part I: Experiments with synoptic-scale data. *Monthly Weather Review*, 118: 1250–1277.

85. Stauffer, D.R., N.L. Seaman and F.S. Binkowski, 1991. Use of four-dimensional data assimilation in a limited-area mesoscale model. Part II: Effect of data assimilation within the planetary boundary layer. *Monthly Weather Review*, 119: 734–754.

86. Grell, G.A., J. Dudhia, and D.R. Stauffer, 1994. A Description of the Fifth-Generation Penn State/NCAR Mesoscale Model (MM5). *NCAR Technical Note*, NCAR/TN–398+STR, National Center for Atmospheric Research, Boulder, CO; 138pp. *http://www.mmm.ucar.edu/mm5/mm5-home.html*

87. Landsberg, H.E. and W.C. Jacobs, 1951. Compendium of Meteorology. American Meteorological Society, Boston, MA; pp. 976–992.

88. Burton, C.S., T.E. Stoeckenius and J.P. Nordin, 1983. The Temporal Representativeness of Short-Term Meteorological Data Sets: Implications for Air Quality Impact Assessments. Systems Applications, Inc., San Rafael, CA. (Docket No. A–80–46, II-G–11)

89. Solar and Meteorological Surface Observation Network, 1961–1990; 3-volume CD-ROM. Version 1.0, September 1993. Produced jointly by National Climatic Data Center and National Renewable Energy Laboratory. Can be ordered from NOAA National Data Center's Internet Web site at *http://www.NNDC.NOAA.GOV/*.

90. Hourly United States Weather Observations, 1990–1995 (CD-ROM). October 1997. Produced jointly by National Climatic Data Center and Environmental Protection Agency. Can be ordered from NOAA National Data Center's Internet Web site at *http://lwf.ncdc.noaa.gov/oa/ncdc.html*

91. Radiosonde Data of North America, 1946–1996; 4-volume CD-ROM. August 1996. Produced jointly by Forecast Systems laboratory and National Climatic Data Center. Can be ordered from NOAA National Data Center's Internet Web site at *http://lwf.ncdc.noaa.gov/oa/ncdc.html*

92. Environmental Protection Agency, 2000. Meteorological Monitoring Guidance for Regulatory Modeling Applications. Publication No. EPA–454/R–99–005. Office of Air Quality Planning & Standards, Research Triangle Park, NC. (PB 2001–103606) (Available at *http://www.epa.gov/scram001/*)

93. ASTM D5527: Standard Practice for Measuring Surface Winds and Temperature by Acoustic Means. (1994)

94. ASTM D5741: Standard Practice for Characterizing Surface Wind Using Wind Vane and Rotating Anemometer. (1996)

95. Environmental Protection Agency, 1995. Quality Assurance for Air Pollution Measurement Systems, Volume IV—Meteorological Measurements. Publication No. EPA600/R–94/038d. Office of Air Quality Planning &

Standards, Research Triangle Park, NC. *Note:* for copies of this handbook, you may make inquiry to ORD Publications, 26 West Martin Luther King Dr., Cincinatti, OH 45268. Phone (513) 569–7562 or (800) 490–9198 (automated request line)

96. Bowen, B.M., J.M. Dewart and A.I. Chen, 1983. Stability Class Determination: A Comparison for One Site. Proceedings, Sixth Symposium on Turbulence and Diffusion. American Meteorological Society, Boston, MA; pp. 211–214. (Docket No. A–92–65, II–A–7)

97. Environmental Protection Agency, 1993. An Evaluation of a Solar Radiation/Delta-T (SRDT) Method for Estimating Pasquill-Gifford (P–G) Stability Categories. Publication No. EPA–454/R–93–055. Office of Air Quality Planning & Standards, Research Triangle Park, NC. (NTIS No. PB 94–113958)

98. Irwin, J.S., 1980. Dispersion Estimate Suggestion #8: Estimation of Pasquill Stability Categories. Office of Air Quality Planning & Standards, Research Triangle Park, NC (Docket No. A–80–46, II–B–10)

99. Mitchell, Jr., A.E. and K.O. Timbre, 1979. Atmospheric Stability Class from Horizontal Wind Fluctuation. Presented at 72nd Annual Meeting of Air Pollution Control Association, Cincinnati, OH; June 24–29, 1979. (Docket No. A–80–46, II–P–9)

100. Smedman—Hogstrom, A. and V. Hogstrom, 1978. A Practical Method for Determining Wind Frequency Distributions for the Lowest 200m from Routine Meteorological Data. *J. of Applied Meteorology*, 17(7): 942–954.

101. Smith, T.B. and S.M. Howard, 1972. Methodology for Treating Diffusivity. MRI 72 FR–1030. Meteorology Research, Inc., Altadena, CA. (Docket No. A–80–46, II–P–8)

102. Environmental Protection Agency, 2004. User's Guide for the AERMOD Meteorological Preprocessor (AERMET). Publication No. EPA–454/B–03–002. U.S. Environmental Protection Agency, Research Triangle Park, NC. (Available at *http://www.epa.gov/scram001/*)

103. Environmental Protection Agency, 1993. PCRAMMET User's Guide. Publication No. EPA–454/R–96–001. Office of Air Quality Planning & Standards, Research Triangle Park, NC. (NTIS No. PB 97–147912)

104. Environmental Protection Agency, 1996. Meteorological Processor for Regulatory Models (MPRM) User's Guide. Publication No. EPA–454/B–96–002. Office of Air Quality Planning & Standards, Research Triangle Park, NC. (NTIS No. PB 96–180518)

105. Paine, R.J., 1987. User's Guide to the CTDM Meteorological Preprocessor Program. Publication No. EPA–600/8–88–004. Office of Research & Development, Research Triangle Park, NC. (NTIS No. PB 88–162102)

106. Scire, J.S., F.R. Francoise, M.E. Fernau and R.J. Yamartino, 1998. A User's Guide for the CALMET Meteorological Model (Version 5.0). Earth Tech, Inc., Concord, MA. (*http://www.src.com/calpuff/calpuff1.htm*)

107. Environmental Protection Agency, 1984. Calms Processor (CALMPRO) User's Guide. Publication No. EPA–901/9–84–001. Office of Air Quality Planning & Standards, Region I, Boston, MA. (NTIS No. PB 84–229467)

108. Fox, D.G., 1984. Uncertainty in air quality modeling. *Bulletin of the American Meteorological Society*, 65(1): 27–36.

109. Burton, C.S., 1981. The Role of Atmospheric Models in Regulatory Decision-Making: Summary Report. Systems Applications, Inc., San Rafael, CA. Prepared under contract No. 68–01–5845 for U.S. Environmental Protection Agency, Research Triangle Park, NC. (Docket No. A–80–46, II–M–6)

110. Environmental Protection Agency, 1981. Proceedings of the Second Conference on Air Quality Modeling, Washington, DC. Office of Air Quality Planning & Standards, Research Triangle Park, NC. (Docket No. A–80–46, II–M–16)

111. Hanna, S.R., 1989. Confidence limits for air quality model evaluations, as estimated by bootstrap and jackknife resampling methods. *Atmospheric Environment*, 23(6): 1385–1398.

112. Cox, W.M. and J.A. Tikvart, 1990. A statistical procedure for determining the best performing air quality simulation model. *Atmos. Environ.*, 24A(9): 2387–2395.

113. Oreskes, N.K., K. Shrader-Frechette and K. Beliz, 1994. Verification, validation and confirmation of numerical models in the earth sciences. *Science*, 263: 641–646.

114. Dekker, C.M., A. Groenendijk, C.J. Sliggers and G.K. Verboom, 1990. Quality Criteria for Models to Calculate Air Pollution. Lucht (Air) 90, Ministry of Housing, Physical Planning and Environment, Postbus 450, 2260 MB Leidschendam, The Netherlands; 52pp.

115. Weil, J.C., R.I. Sykes and A. Venkatram, 1992. Evaluating air-quality models: review and outlook. *Journal of Applied Meteorology*, 31: 1121–1145.

116. Cole, S.T. and P.J. Wicks, Editors (1995): Model Evaluation Group: Report of the Second Open Meeting. EUR 15990 EN, European Commission, Directorate-General XII, Environmental Research Programme, L–2920 Luxembourg; 77pp.

117. Hanna, S.R., 1982. Natural Variability of Observed Hourly SO_2 and CO Concentrations in St. Louis. *Atmospheric Environment*, 16(6): 1435–1440.

118. Bowne, N.E., 1981. Validation and Performance Criteria for Air Quality Models. Appendix F in Air Quality Modeling and the Clean Air Act: Recommendations to EPA on Dispersion Modeling for Regulatory Applications. American Meteorological Society, Boston, MA; pp. 159–171. (Docket No. A–80–46, II–A–106)

119. Bowne, N.E. and R.J. Londergan, 1983. Overview, Results, and Conclusions for the

EPRI Plume Model Validation and Development Project: Plains Site. EPRI EA–3074. Electric Power Research Institute, Palo Alto, CA.

120. Moore, G.E., T.E. Stoeckenius and D.A. Stewart, 1982. A Survey of Statistical Measures of Model Performance and Accuracy for Several Air Quality Models. Publication No. EPA–450/4–83–001. Office of Air Quality Planning & Standards, Research Triangle Park, NC. (NTIS No. PB 83–260810)

121. Rhoads, R.G., 1981. Accuracy of Air Quality Models. Staff Report. Office of Air Quality Planning & Standards, Research Triangle Park, NC. (Docket No. A–80–46, II–G–6)

122. Hanna, S.R., 1993. Uncertainties in air quality model predictions. *Boundary-Layer Meteorology*, 62: 3–20.

123. Pasquill, F., 1974. Atmospheric Diffusion, 2nd Edition. John Wiley and Sons, New York, NY; 479pp.

124. Morgan, M.G. and M. Henrion, 1990. Uncertainty, A Guide to Dealing With Uncertainty in Quantitative Risk and Policy Analysis. Cambridge University Press. New York, NY; 332pp.

125. Irwin, J.S., K. Steinberg, C. Hakkarinen and H. Feldman, 2001. Uncertainty in Air Quality Modeling for Risk Calculations. (CD-ROM) Proceedings of Guideline on Air Quality Models: A New Beginning. April 4–6, 2001, Newport, RI, Air & Waste Management Association. Pittsburgh, PA; 17pp.

126. Austin, B.S., T.E. Stoeckenius, M.C. Dudik and T.S. Stocking, 1988. User's Guide to the Expected Exceedances System. Systems Applications, Inc., San Rafael, CA. Prepared under Contract No. 68–02–4352 Option I for the U.S. Environmental Protection Agency, Research Triangle Park, NC. (Docket No. A–88–04, II–I–3)

127. Thrall, A.D., T.E. Stoeckenius and C.S. Burton, 1985. A Method for Calculating Dispersion Modeling Uncertainty Applied to the Regulation of an Emission Source. Systems Applications, Inc., San Rafael, CA. Prepared for the U.S. Environmental Protection Agency, Research Triangle Park, NC. (Docket No. A–80–46, IV–G–1)

128. ''Ten years of Harmonisation activities: Past, present and future'' at *http://www.dmu.dk/AtmosphericEnvironment/Harmoni/Conferences/Belgirate/BelgiratePapers.asp*.

129. ''A platform for model evaluation'' at *http://www.dmu.dk/AtmosphericEnvironment/Harmoni/Conferences/Belgirate/BelgiratePapers.asp*.

APPENDIX A TO APPENDIX W OF PART 51—SUMMARIES OF PREFERRED AIR QUALITY MODELS

TABLE OF CONTENTS

A.0 Introduction and Availability
A.1 Aermod
A.2 Buoyant Line and Point Source Dispersion Model (BLP)
A.3 CALINE3
A.4 CALPUFF
A.5 Complex Terrain Dispersion Model Plus Algorithms for Unstable Situations (CTDMPLUS)
A.6 Offshore and Coastal Dispersion Model (OCD)
A.REF References

A.0 INTRODUCTION AND AVAILABILITY

(1) This appendix summarizes key features of refined air quality models preferred for specific regulatory applications. For each model, information is provided on availability, approximate cost (where applicable), regulatory use, data input, output format and options, simulation of atmospheric physics, and accuracy. These models may be used without a formal demonstration of applicability provided they satisfy the recommendations for regulatory use; not all options in the models are necessarily recommended for regulatory use.

(2) Many of these models have been subjected to a performance evaluation using comparisons with observed air quality data. Where possible, several of the models contained herein have been subjected to evaluation exercises, including (1) statistical performance tests recommended by the American Meteorological Society and (2) peer scientific reviews. The models in this appendix have been selected on the basis of the results of the model evaluations, experience with previous use, familiarity of the model to various air quality programs, and the costs and resource requirements for use.

(3) Codes and documentation for all models listed in this appendix are available from EPA's Support Center for Regulatory Air Models (SCRAM) Web site at *http://www.epa.gov/scram001*. Documentation is also available from the National Technical Information Service (NTIS), *http://www.ntis.gov* or U.S. Department of Commerce, Springfield, VA 22161; phone: (800) 553–6847. Where possible, accession numbers are provided.

A.1 AMS/EPA REGULATORY MODEL—AERMOD

References

Environmental Protection Agency, 2004. AERMOD: Description of Model Formulation. Publication No. EPA–454/R–03–004. U.S. Environmental Protection Agency, Research Triangle Park, NC 27711; September 2004. (Available at *http://www.epa.gov/scram001/*)

Cimorelli, A. *et al.*, 2005. AERMOD: A Dispersion Model for Industrial Source Applications. Part I: General Model Formulation and Boundary Layer Characterization. *Journal of Applied Meteorology*, 44(5): 682–693.

Perry, S. *et al.*, 2005. AERMOD: A Dispersion Model for Industrial Source Applications. Part II: Model Performance against 17 Field Study Databases. *Journal of Applied Meteorology*, 44(5): 694–708.

Environmental Protection Agency, 2004. User's Guide for the AMS/EPA Regulatory Model—AERMOD. Publication No. EPA–454/B–03–001. U.S. Environmental Protection Agency, Research Triangle Park, NC 27711; September 2004. (Available at *http://www.epa.gov/scram001/*)

Environmental Protection Agency, 2004. User's Guide for the AERMOD Meteorological Preprocessor (AERMET). Publication No. EPA–454/B–03–002. U.S. Environmental Protection Agency, Research Triangle Park, NC 27711; November 2004. (Available at *http://www.epa.gov/scram001/*)

Environmental Protection Agency, 2004. User's Guide for the AERMOD Terrain Preprocessor (AERMAP). Publication No. EPA–454/B–03–003. U.S. Environmental Protection Agency, Research Triangle Park, NC 27711; October 2004. (Available at *http://www.epa.gov/scram001/*)

Schulman, L.L., D.G. Strimaitis and J.S. Scire, 2000. Development and evaluation of the PRIME plume rise and building downwash model. *Journal of the Air and Waste Management Association*, 50: 378–390.

Availability

The model codes and associated documentation are available on EPA's Internet SCRAM Web site (Section A.0).

Abstract

AERMOD is a steady-state plume dispersion model for assessment of pollutant concentrations from a variety of sources. AERMOD simulates transport and dispersion from multiple point, area, or volume sources based on an up-to-date characterization of the atmospheric boundary layer. Sources may be located in rural or urban areas, and receptors may be located in simple or complex terrain. AERMOD accounts for building wake effects (*i.e.*, plume downwash) based on the PRIME building downwash algorithms. The model employs hourly sequential preprocessed meteorological data to estimate concentrations for averaging times from one hour to one year (also multiple years). AERMOD is designed to operate in concert with two pre-processor codes: AERMET processes meteorological data for input to AERMOD, and AERMAP processes terrain elevation data and generates receptor information for input to AERMOD.

a. Recommendations for Regulatory Use

(1) AERMOD is appropriate for the following applications:

- Point, volume, and area sources;
- Surface, near-surface, and elevated releases;
- Rural or urban areas;
- Simple and complex terrain;
- Transport distances over which steady-state assumptions are appropriate, up to 50km;
- 1-hour to annual averaging times; and
- Continuous toxic air emissions.

(2) For regulatory applications of AERMOD, the regulatory default option should be set, i.e., the parameter DFAULT should be employed in the MODELOPT record in the COntrol Pathway. The DFAULT option requires the use of terrain elevation data, stack-tip downwash, sequential date checking, and does not permit the use of the model in the SCREEN mode. In the regulatory default mode, pollutant half life or decay options are not employed, except in the case of an urban source of sulfur dioxide where a four-hour half life is applied. Terrain elevation data from the U.S. Geological Survey 7.5-Minute Digital Elevation Model (*edcwww.cr.usgs.gov/doc/edchome/ndcdb/ndcdb.html*) or equivalent (approx. 30-meter resolution) should be used in all applications. In some cases, exceptions of the terrain data requirement may be made in consultation with the permit/SIP reviewing authority.

b. Input Requirements

(1) Source data: Required input includes source type, location, emission rate, stack height, stack inside diameter, stack gas exit velocity, stack gas temperature, area and volume source dimensions, and source elevation. Building dimensions and variable emission rates are optional.

(2) Meteorological data: The AERMET meteorological preprocessor requires input of surface characteristics, including surface roughness (zo), Bowen ratio, and albedo, as well as, hourly observations of wind speed between 7zo and 100m (reference wind speed measurement from which a vertical profile can be developed), wind direction, cloud cover, and temperature between zo and 100m (reference temperature measurement from which a vertical profile can be developed). Surface characteristics may be varied by wind sector and by season or month. A morning sounding (in National Weather Service format) from a representative upper air station, latitude, longitude, time zone, and wind speed threshold are also required in AERMET (instrument threshold is only required for site specific data). Additionally, measured profiles of wind, temperature, vertical and lateral turbulence may be required in certain applications (e.g., in complex terrain) to adequately represent the meteorology affecting plume transport and dispersion. Optionally, measurements of solar, or net radiation may be input to AERMET.

Two files are produced by the AERMET meteorological preprocessor for input to the AERMOD dispersion model. The surface file contains observed and calculated surface variables, one record per hour. The profile file contains the observations made at each level of a meteorological tower (or remote sensor), or the one-level observations taken from other representative data (e.g., National Weather Service surface observations), one record per level per hour.

(i) Data used as input to AERMET should possess an adequate degree of representativeness to insure that the wind, temperature and turbulence profiles derived by AERMOD are both laterally and vertically representative of the source area. The adequacy of input data should be judged independently for each variable. The values for surface roughness, Bowen ratio, and albedo should reflect the surface characteristics in the vicinity of the meteorological tower, and should be adequately representative of the modeling domain. Finally, the primary atmospheric input variables including wind speed and direction, ambient temperature, cloud cover, and a morning upper air sounding should also be adequately representative of the source area.

(ii) For recommendations regarding the length of meteorological record needed to perform a regulatory analysis with AERMOD, see Section 8.3.1.

(3) Receptor data: Receptor coordinates, elevations, height above ground, and hill height scales are produced by the AERMAP terrain preprocessor for input to AERMOD. Discrete receptors and/or multiple receptor grids, Cartesian and/or polar, may be employed in AERMOD. AERMAP requires input of Digital Elevation Model (DEM) terrain data produced by the U.S. Geological Survey (USGS), or other equivalent data. AERMAP can be used optionally to estimate source elevations.

c. Output

Printed output options include input information, high concentration summary tables by receptor for user-specified averaging periods, maximum concentration summary tables, and concurrent values summarized by receptor for each day processed. Optional output files can be generated for: a listing of occurrences of exceedances of user-specified threshold value; a listing of concurrent (raw) results at each receptor for each hour modeled, suitable for post-processing; a listing of design values that can be imported into graphics software for plotting contours; an unformatted listing of raw results above a threshold value with a special structure for use with the TOXX model component of TOXST; a listing of concentrations by rank (e.g., for use in quantile-quantile plots); and, a listing of concentrations, including arc-maximum normalized concentrations, suitable for model evaluation studies.

d. Type of Model

AERMOD is a steady-state plume model, using Gaussian distributions in the vertical and horizontal for stable conditions, and in the horizontal for convective conditions. The vertical concentration distribution for convective conditions results from an assumed bi-Gaussian probability density function of the vertical velocity.

e. Pollutant Types

AERMOD is applicable to primary pollutants and continuous releases of toxic and hazardous waste pollutants. Chemical transformation is treated by simple exponential decay.

f. Source-Receptor Relationships

AERMOD applies user-specified locations for sources and receptors. Actual separation between each source-receptor pair is used. Source and receptor elevations are user input or are determined by AERMAP using USGS DEM terrain data. Receptors may be located at user-specified heights above ground level.

g. Plume Behavior

(1) In the convective boundary layer (CBL), the transport and dispersion of a plume is characterized as the superposition of three modeled plumes: The direct plume (from the stack), the indirect plume, and the penetrated plume, where the indirect plume accounts for the lofting of a buoyant plume near the top of the boundary layer, and the penetrated plume accounts for the portion of a plume that, due to its buoyancy, penetrates above the mixed layer, but can disperse downward and re-enter the mixed layer. In the CBL, plume rise is superposed on the displacements by random convective velocities (Weil *et al.*, 1997).

(2) In the stable boundary layer, plume rise is estimated using an iterative approach, similar to that in the CTDMPLUS model (see A.5 in this appendix).

(3) Stack-tip downwash and buoyancy induced dispersion effects are modeled. Building wake effects are simulated for stacks less than good engineering practice height using the methods contained in the PRIME downwash algorithms (Schulman, *et al.*, 2000). For plume rise affected by the presence of a building, the PRIME downwash algorithm uses a numerical solution of the mass, energy and momentum conservation laws (Zhang and Ghoniem, 1993). Streamline deflection and the position of the stack relative to the building affect plume trajectory and dispersion. Enhanced dispersion is based on the approach of Weil (1996). Plume mass captured by the cavity is well-mixed within

the cavity. The captured plume mass is reemitted to the far wake as a volume source.

(4) For elevated terrain, AERMOD incorporates the concept of the critical dividing streamline height, in which flow below this height remains horizontal, and flow above this height tends to rise up and over terrain (Snyder *et al.*, 1985). Plume concentration estimates are the weighted sum of these two limiting plume states. However, consistent with the steady-state assumption of uniform horizontal wind direction over the modeling domain, straight-line plume trajectories are assumed, with adjustment in the plume/receptor geometry used to account for the terrain effects.

h. Horizontal Winds

Vertical profiles of wind are calculated for each hour based on measurements and surface-layer similarity (scaling) relationships. At a given height above ground, for a given hour, winds are assumed constant over the modeling domain. The effect of the vertical variation in horizontal wind speed on dispersion is accounted for through simple averaging over the plume depth.

i. Vertical Wind Speed

In convective conditions, the effects of random vertical updraft and downdraft velocities are simulated with a bi-Gaussian probability density function. In both convective and stable conditions, the mean vertical wind speed is assumed equal to zero.

j. Horizontal Dispersion

Gaussian horizontal dispersion coefficients are estimated as continuous functions of the parameterized (or measured) ambient lateral turbulence and also account for buoyancy-induced and building wake-induced turbulence. Vertical profiles of lateral turbulence are developed from measurements and similarity (scaling) relationships. Effective turbulence values are determined from the portion of the vertical profile of lateral turbulence between the plume height and the receptor height. The effective lateral turbulence is then used to estimate horizontal dispersion.

k. Vertical Dispersion

In the stable boundary layer, Gaussian vertical dispersion coefficients are estimated as continuous functions of parameterized vertical turbulence. In the convective boundary layer, vertical dispersion is characterized by a bi-Gaussian probability density function, and is also estimated as a continuous function of parameterized vertical turbulence. Vertical turbulence profiles are developed from measurements and similarity (scaling) relationships. These turbulence profiles account for both convective and mechanical turbulence. Effective turbulence values are determined from the portion of the vertical profile of vertical turbulence between the plume height and the receptor height. The effective vertical turbulence is then used to estimate vertical dispersion.

l. Chemical Transformation

Chemical transformations are generally not treated by AERMOD. However, AERMOD does contain an option to treat chemical transformation using simple exponential decay, although this option is typically not used in regulatory applications, except for sources of sulfur dioxide in urban areas. Either a decay coefficient or a half life is input by the user. Note also that the Plume Volume Molar Ratio Method (subsection 5.1) and the Ozone Limiting Method (subsection 5.2.4) and for point-source NO_2 analyses are available as non-regulatory options.

m. Physical Removal

AERMOD can be used to treat dry and wet deposition for both gases and particles.

n. Evaluation Studies

American Petroleum Institute, 1998. Evaluation of State of the Science of Air Quality Dispersion Model, Scientific Evaluation, prepared by Woodward-Clyde Consultants, Lexington, Massachusetts, for American Petroleum Institute, Washington, D.C., 20005–4070.

Brode, R.W., 2002. Implementation and Evaluation of PRIME in AERMOD. Preprints of the 12th Joint Conference on Applications of Air Pollution Meteorology, May 20–24, 2002; American Meteorological Society, Boston, MA.

Brode, R.W., 2004. Implementation and Evaluation of Bulk Richardson Number Scheme in AERMOD. 13th Joint Conference on Applications of Air Pollution Meteorology, August 23–26, 2004; American Meteorological Society, Boston, MA.

Environmental Protection Agency, 2003. AERMOD: Latest Features and Evaluation Results. Publication No. EPA–454/R–03–003. U.S. Environmental Protection Agency, Research Triangle Park, NC. Available at *http://www.epa.gov/scram001/.*

A.2 BUOYANT LINE AND POINT SOURCE DISPERSION MODEL (BLP)

Reference

Schulman, Lloyd L., and Joseph S. Scire, 1980. Buoyant Line and Point Source (BLP) Dispersion Model User's Guide. Document P–7304B. Environmental Research and Technology, Inc., Concord, MA. (NTIS No. PB 81–164642; also available at *http://www.epa.gov/scram001/*)

Availability

The computer code is available on EPA's Internet SCRAM Web site and also on diskette (as PB 2002–500051) from the National

Technical Information Service (see Section A.0).

Abstract

BLP is a Gaussian plume dispersion model designed to handle unique modeling problems associated with aluminum reduction plants, and other industrial sources where plume rise and downwash effects from stationary line sources are important.

a. Recommendations for Regulatory Use

(1) The BLP model is appropriate for the following applications:

- Aluminum reduction plants which contain buoyant, elevated line sources;
- Rural areas;
- Transport distances less than 50 kilometers;
- Simple terrain; and
- One hour to one year averaging times.

(2) The following options should be selected for regulatory applications:

(i) Rural (IRU=1) mixing height option;

(ii) Default (no selection) for plume rise wind shear (LSHEAR), transitional point source plume rise (LTRANS), vertical potential temperature gradient (DTHTA), vertical wind speed power law profile exponents (PEXP), maximum variation in number of stability classes per hour (IDELS), pollutant decay (DECFAC), the constant in Briggs' stable plume rise equation (CONST2), constant in Briggs' neutral plume rise equation (CONST3), convergence criterion for the line source calculations (CRIT), and maximum iterations allowed for line source calculations (MAXIT); and

(iii) Terrain option (TERAN) set equal to 0.0, 0.0, 0.0, 0.0, 0.0, 0.0

(3) For other applications, BLP can be used if it can be demonstrated to give the same estimates as a recommended model for the same application, and will subsequently be executed in that mode.

(4) BLP can be used on a case-by-case basis with specific options not available in a recommended model if it can be demonstrated, using the criteria in Section 3.2, that the model is more appropriate for a specific application.

b. Input Requirements

(1) Source data: point sources require stack location, elevation of stack base, physical stack height, stack inside diameter, stack gas exit velocity, stack gas exit temperature, and pollutant emission rate. Line sources require coordinates of the end points of the line, release height, emission rate, average line source width, average building width, average spacing between buildings, and average line source buoyancy parameter.

(2) Meteorological data: surface weather data from a preprocessor such as PCRAMMET which provides hourly stability class, wind direction, wind speed, temperature, and mixing height.

(3) Receptor data: locations and elevations of receptors, or location and size of receptor grid or request automatically generated receptor grid.

c. Output

(1) Printed output (from a separate postprocessor program) includes:

(2) Total concentration or, optionally, source contribution analysis; monthly and annual frequency distributions for 1-, 3-, and 24-hour average concentrations; tables of 1-, 3-, and 24-hour average concentrations at each receptor; table of the annual (or length of run) average concentrations at each receptor;

(3) Five highest 1-, 3-, and 24-hour average concentrations at each receptor; and

(4) Fifty highest 1-, 3-, and 24-hour concentrations over the receptor field.

d. Type of Model

BLP is a gaussian plume model.

e. Pollutant Types

BLP may be used to model primary pollutants. This model does not treat settling and deposition.

f. Source-Receptor Relationship

(1) BLP treats up to 50 point sources, 10 parallel line sources, and 100 receptors arbitrarily located.

(2) User-input topographic elevation is applied for each stack and each receptor.

g. Plume Behavior

(1) BLP uses plume rise formulas of Schulman and Scire (1980).

(2) Vertical potential temperature gradients of 0.02 Kelvin per meter for E stability and 0.035 Kelvin per meter are used for stable plume rise calculations. An option for user input values is included.

(3) Transitional rise is used for line sources.

(4) Option to suppress the use of transitional plume rise for point sources is included.

(5) The building downwash algorithm of Schulman and Scire (1980) is used.

h. Horizontal Winds

(1) Constant, uniform (steady-state) wind is assumed for an hour.

Straight line plume transport is assumed to all downwind distances.

(2) Wind speeds profile exponents of 0.10, 0.15, 0.20, 0.25, 0.30, and 0.30 are used for stability classes A through F, respectively. An option for user-defined values and an option to suppress the use of the wind speed profile feature are included.

i. Vertical Wind Speed

Vertical wind speed is assumed equal to zero.

j. Horizontal Dispersion

(1) Rural dispersion coefficients are from Turner (1969), with no adjustment made for variations in surface roughness or averaging time.

(2) Six stability classes are used.

k. Vertical Dispersion

(1) Rural dispersion coefficients are from Turner (1969), with no adjustment made for variations in surface roughness.

(2) Six stability classes are used.

(3) Mixing height is accounted for with multiple reflections until the vertical plume standard deviation equals 1.6 times the mixing height; uniform mixing is assumed beyond that point.

(4) Perfect reflection at the ground is assumed.

l. Chemical Transformation

Chemical transformations are treated using linear decay. Decay rate is input by the user.

m. Physical Removal

Physical removal is not explicitly treated.

n. Evaluation Studies

Schulman, L.L. and J.S. Scire, 1980. Buoyant Line and Point Source (BLP) Dispersion Model User's Guide, P–7304B. Environmental Research and Technology, Inc., Concord, MA.

Scire, J.S. and L.L. Schulman, 1981. Evaluation of the BLP and ISC Models with SF_6 Tracer Data and SO_2 Measurements at Aluminum Reduction Plants. APCA Specialty Conference on Dispersion Modeling for Complex Sources, St. Louis, MO.

A.3 CALINE3

Reference

Benson, Paul E., 1979. CALINE3—A Versatile Dispersion Model for Predicting Air Pollutant Levels Near Highways and Arterial Streets. Interim Report, Report Number FHWA/CA/TL–79/23. Federal Highway Administration, Washington, DC (NTIS No. PB 80–220841).

Availability

The CALINE3 model is available on diskette (as PB 95–502712) from NTIS. The source code and user's guide are also available on EPA's Internet SCRAM Web site (Section A.0).

Abstract

CALINE3 can be used to estimate the concentrations of nonreactive pollutants from highway traffic. This steady-state Gaussian model can be applied to determine air pollution concentrations at receptor locations downwind of ''at-grade,'' ''fill,'' ''bridge,'' and ''cut section'' highways located in relatively uncomplicated terrain. The model is applicable for any wind direction, highway orientation, and receptor location. The model has adjustments for averaging time and surface roughness, and can handle up to 20 links and 20 receptors. It also contains an algorithm for deposition and settling velocity so that particulate concentrations can be predicted.

a. Recommendations for Regulatory Use

CALINE–3 is appropriate for the following applications:

- Highway (line) sources;
- Urban or rural areas;
- Simple terrain;
- Transport distances less than 50 kilometers; and
- One-hour to 24-hour averaging times.

b. Input Requirements

(1) Source data: up to 20 highway links classed as ''at-grade,'' ''fill,'' ''bridge,'' or ''depressed''; coordinates of link end points; traffic volume; emission factor; source height; and mixing zone width.

(2) Meteorological data: wind speed, wind angle (measured in degrees clockwise from the Y axis), stability class, mixing height, ambient (background to the highway) concentration of pollutant.

(3) Receptor data: coordinates and height above ground for each receptor.

c. Output

Printed output includes concentration at each receptor for the specified meteorological condition.

d. Type of Model

CALINE–3 is a Gaussian plume model.

e. Pollutant Types

CALINE–3 may be used to model primary pollutants.

f. Source-Receptor Relationship

(1) Up to 20 highway links are treated.

(2) CALINE–3 applies user input location and emission rate for each link. User-input receptor locations are applied.

g. Plume Behavior

Plume rise is not treated.

h. Horizontal Winds

(1) User-input hourly wind speed and direction are applied.

(2) Constant, uniform (steady-state) wind is assumed for an hour.

i. Vertical Wind Speed

Vertical wind speed is assumed equal to zero.

j. Horizontal Dispersion

(1) Six stability classes are used.
(2) Rural dispersion coefficients from Turner (1969) are used, with adjustment for roughness length and averaging time.
(3) Initial traffic-induced dispersion is handled implicitly by plume size parameters.

k. Vertical Dispersion

(1) Six stability classes are used.
(2) Empirical dispersion coefficients from Benson (1979) are used including an adjustment for roughness length.
(3) Initial traffic-induced dispersion is handled implicitly by plume size parameters.
(4) Adjustment for averaging time is included.

l. Chemical Transformation

Not treated.

m. Physical Removal

Optional deposition calculations are included.

n. Evaluation Studies

Bemis, G.R. *et al.*, 1977. Air Pollution and Roadway Location, Design, and Operation—Project Overview. FHWA–CA–TL–7080–77–25, Federal Highway Administration, Washington, DC.

Cadle, S.H. *et al.*, 1976. Results of the General Motors Sulfate Dispersion Experiment, GMR–2107. General Motors Research Laboratories, Warren, MI.

Dabberdt, W.F., 1975. Studies of Air Quality on and Near Highways, Project 2761. Stanford Research Institute, Menlo Park, CA.

Environmental Protection Agency, 1986. Evaluation of Mobile Source Air Quality Simulation Models. EPA Publication No. EPA–450/4–86–002. Office of Air Quality Planning & Standards, Research Triangle Park, NC. (NTIS No. PB 86–167293)

A.4 CALPUFF

References

Scire, J.S., D.G. Strimaitis and R.J. Yamartino, 2000. A User's Guide for the CALPUFF Dispersion Model (Version 5.0). Earth Tech, Inc., Concord, MA.

Scire J.S., F.R. Robe, M.E. Fernau and R.J. Yamartino, 2000. A User's Guide for the CALMET Meteorological Model (Version 5.0). Earth Tech, Inc., Concord, MA.

Availability

The model code and its documentation are available at no cost for download from the model developers' Internet Web site: *http://www.src.com/calpuff/calpuff1.htm*. You may also contact Joseph Scire, Earth Tech, Inc., 196 Baker Avenue, Concord, MA 01742; Telephone: (978) 371–4270; Fax: (978) 371–2468; e-mail: *JScire@alum.mit.edu*.

Abstract

CALPUFF is a multi-layer, multi-species non-steady-state puff dispersion modeling system that simulates the effects of time- and space-varying meteorological conditions on pollutant transport, transformation, and removal. CALPUFF is intended for use on scales from tens of meters from a source to hundreds of kilometers. It includes algorithms for near-field effects such as stack tip downwash, building downwash, transitional buoyant and momentum plume rise, rain cap effects, partial plume penetration, subgrid scale terrain and coastal interactions effects, and terrain impingement as well as longer range effects such as pollutant removal due to wet scavenging and dry deposition, chemical transformation, vertical wind shear effects, overwater transport, plume fumigation, and visibility effects of particulate matter concentrations.

a. Recommendations for Regulatory Use

(1) CALPUFF is appropriate for long range transport (source-receptor distances of 50 to several hundred kilometers) of emissions from point, volume, area, and line sources. The meteorological input data should be fully characterized with time-and-space-varying three dimensional wind and meteorological conditions using CALMET, as discussed in paragraphs 8.3(d) and 8.3.1.2(d) of Appendix W.

(2) CALPUFF may also be used on a case-by-case basis if it can be demonstrated using the criteria in Section 3.2 that the model is more appropriate for the specific application. The purpose of choosing a modeling system like CALPUFF is to fully treat stagnation, wind reversals, and time and space variations of meteorological conditions on transport and dispersion, as discussed in paragraph 7.2.8(a).

(3) For regulatory applications of CALMET and CALPUFF, the regulatory default option should be used. Inevitably, some of the model control options will have to be set specific for the application using expert judgment and in consultation with the appropriate reviewing authorities.

b. Input Requirements

Source Data:

1. Point sources: Source location, stack height, diameter, exit velocity, exit temperature, base elevation, wind direction specific building dimensions (for building downwash calculations), and emission rates for each pollutant. Particle size distributions

may be entered for particulate matter. Temporal emission factors (diurnal cycle, monthly cycle, hour/season, wind speed/stability class, or temperature-dependent emission factors) may also be entered. Arbitrarily-varying point source parameters may be entered from an external file.

2. Area sources: Source location and shape, release height, base elevation, initial vertical distribution (σ_z) and emission rates for each pollutant. Particle size distributions may be entered for particulate matter. Temporal emission factors (diurnal cycle, monthly cycle, hour/season, wind speed/stability class, or temperature-dependent emission factors) may also be entered. Arbitrarily-varying area source parameters may be entered from an external file. Area sources specified in the external file are allowed to be buoyant and their location, size, shape, and other source characteristics are allowed to change in time.

3. Volume sources: Source location, release height, base elevation, initial horizontal and vertical distributions (σ_y, σ_z) and emission rates for each pollutant. Particle size distributions may be entered for particulate matter. Temporal emission factors (diurnal cycle, monthly cycle, hour/season, wind speed/stability class, or temperature-dependent emission factors) may also be entered. Arbitrarily-varying volume source parameters may be entered from an external file. Volume sources with buoyancy can be simulated by treating the source as a point source and entering initial plume size parameters—initial (σ_y, σ_z)—to define the initial size of the volume source.

4. Line sources: Source location, release height, base elevation, average buoyancy parameter, and emission rates for each pollutant. Building data may be entered for line source emissions experiencing building downwash effects. Particle size distributions may be entered for particulate matter. Temporal emission factors (diurnal cycle, monthly cycle, hour/season, wind speed/stability class, or temperature-dependent emission factors) may also be entered. Arbitrarily-varying line source parameters may be entered from an external file.

Meteorological Data (different forms of meteorological input can be used by CALPUFF):

1. Time-dependent three-dimensional (3–D) meteorological fields generated by CALMET. This is the preferred mode for running CALPUFF. Data inputs used by CALMET include surface observations of wind speed, wind direction, temperature, cloud cover, ceiling height, relative humidity, surface pressure, and precipitation (type and amount), and upper air sounding data (wind speed, wind direction, temperature, and height) and air-sea temperature differences (over water). Optional 3–D meteorological prognostic model output (e.g., from models such as MM5, RUC, Eta and RAMS) can be used by CALMET as well (paragraph 8.3.1.2(d)). CALMET contains an option to be run in ''No-observations'' mode (Robe et al., 2002), which allows the 3–D CALMET meteorological fields to be based on prognostic model output alone, without observations. This allows CALMET and CALPUFF to be run in prognostic mode for forecast applications.

2. Single station surface and upper air meteorological data in CTDMPLUS data file formats (SURFACE.DAT and PROFILE.DAT files) or AERMOD data file formats. These options allow a vertical variation in the meteorological parameters but no horizontal spatial variability.

3. Single station meteorological data in ISCST3 data file format. This option does not account for variability of the meteorological parameters in the horizontal or vertical, except as provided for by the use of stability-dependent wind shear exponents and average temperature lapse rates.

Gridded terrain and land use data are required as input into CALMET when Option 1 is used. Geophysical processor programs are provided that interface the modeling system to standard terrain and land use data bases available from various sources such as the U.S. Geological Survey (USGS) and the National Aeronautics and Space Administration (NASA).

Receptor Data:

CALPUFF includes options for gridded and non-gridded (discrete) receptors. Special subgrid-scale receptors are used with the subgrid-scale complex terrain option. An option is provided for discrete receptors to be placed at ground-level or above the local ground level (*i.e.*, flagpole receptors). Gridded and subgrid-scale receptors are placed at the local ground level only.

Other Input:

CALPUFF accepts hourly observations of ozone concentrations for use in its chemical transformation algorithm. Monthly concentrations of ammonia concentrations can be specified in the CALPUFF input file, although higher time-resolution ammonia variability can be computed using the POSTUTIL program. Subgrid-scale coastlines can be specified in its coastal boundary file. Optional, user-specified deposition velocities and chemical transformation rates can also be entered. CALPUFF accepts the CTDMPLUS terrain and receptor files for use in its subgrid-scale terrain algorithm. Inflow boundary conditions of modeled pollutants can be specified in a boundary condition file. Liquid water content variables including cloud water/ice and precipitation water/ice can be used as input for visibility analyses and other CALPUFF modules.

c. Output

CALPUFF produces files of hourly concentrations of ambient concentrations for each modeled species, wet deposition fluxes, dry deposition fluxes, and for visibility applications, extinction coefficients. Postprocessing programs (PRTMET, CALPOST, CALSUM, APPEND, and POSTUTIL) provide options for summing, scaling, analyzing and displaying the modeling results. CALPOST contains options for computing of light extinction (visibility) and POSTUTIL allows the re-partitioning of nitric acid and nitrate to account for the effects of ammonia limitation (Scire *et al.*, 2001; Escoffier-Czaja and Scire, 2002). CALPUFF contains an options to output liquid water concentrations for use in computing visible plume lengths and frequency of icing and fogging from cooling towers and other water vapor sources. The CALPRO Graphical User Interface (GUI) contains options for creating graphics such as contour plots, vector plots and other displays when linked to graphics software.

d. Type of Model

(1) CALPUFF is a non-steady-state time- and space-dependent Gaussian puff model. CALPUFF treats primary pollutants and simulates secondary pollutant formation using a parameterized, quasi-linear chemical conversion mechanism. Pollutants treated include SO_2, $SO_4^{=}$, NO_X (*i.e.*, NO + NO_2), HNO_3, NO_3^-, NH_3, PM–10, PM–2.5, toxic pollutants and others pollutant species that are either inert or subject to quasi-linear chemical reactions. The model includes a resistance-based dry deposition model for both gaseous pollutants and particulate matter. Wet deposition is treated using a scavenging coefficient approach. The model has detailed parameterizations of complex terrain effects, including terrain impingement, side-wall scrapping, and steep-walled terrain influences on lateral plume growth. A subgrid-scale complex terrain module based on a dividing streamline concept divides the flow into a lift component traveling over the obstacle and a wrap component deflected around the obstacle.

(2) The meteorological fields used by CALPUFF are produced by the CALMET meteorological model. CALMET includes a diagnostic wind field model containing parameterized treatments of slope flows, valley flows, terrain blocking effects, and kinematic terrain effects, lake and sea breeze circulations, a divergence minimization procedure, and objective analysis of observational data. An energy-balance scheme is used to compute sensible and latent heat fluxes and turbulence parameters over land surfaces. A profile method is used over water. CALMET contains interfaces to prognostic meteorological models such as the Penn State/NCAR Mesoscale Model (e.g., MM5; Section 12.0, ref. 86), as well as the RAMS, Ruc and Eta models.

e. Pollutant Types

CALPUFF may be used to model gaseous pollutants or particulate matter that are inert or which undergo quasi-linear chemical reactions, such as SO_2, SO_4 =, NO_X (*i.e.*, NO + NO_2), HNO_3, NO_3-, NH_3, PM–10, PM–2.5 and toxic pollutants. For regional haze analyses, sulfate and nitrate particulate components are explicitly treated.

f. Source-Receptor Relationships

CALPUFF contains no fundamental limitations on the number of sources or receptors. Parameter files are provided that allow the user to specify the maximum number of sources, receptors, puffs, species, grid cells, vertical layers, and other model parameters. Its algorithms are designed to be suitable for source-receptor distances from tens of meters to hundreds of kilometers.

g. Plume Behavior

Momentum and buoyant plume rise is treated according to the plume rise equations of Briggs (1975) for non-downwashing point sources, Schulman and Scire (1980) for line sources and point sources subject to building downwash effects using the Schulman-Scire downwash algorithm, and Zhang (1993) for buoyant area sources and point sources affected by building downwash when using the PRIME building downwash method. Stack tip downwash effects and partial plume penetration into elevated temperature inversions are included. An algorithm to treat horizontally-oriented vents and stacks with rain caps is included.

h. Horizontal Winds

A three-dimensional wind field is computed by the CALMET meteorological model. CALMET combines an objective analysis procedure using wind observations with parameterized treatments of slope flows, valley flows, terrain kinematic effects, terrain blocking effects, and sea/lake breeze circulations. CALPUFF may optionally use single station (horizontally-constant) wind fields in the CTDMPLUS, AERMOD or ISCST3 data formats.

i. Vertical Wind Speed

Vertical wind speeds are not used explicitly by CALPUFF. Vertical winds are used in the development of the horizontal wind components by CALMET.

j. Horizontal Dispersion

Turbulence-based dispersion coefficients provide estimates of horizontal plume dispersion based on measured or computed values of σ_v. The effects of building downwash and buoyancy-induced dispersion are included. The effects of vertical wind shear are included through the puff splitting algorithm. Options are provided to use Pasquill-Gifford (rural) and McElroy-Pooler (urban) dispersion coefficients. Initial plume size from area or volume sources is allowed.

k. Vertical Dispersion

Turbulence-based dispersion coefficients provide estimates of vertical plume dispersion based on measured or computed values of σ_w. The effects of building downwash and buoyancy-induced dispersion are included. Vertical dispersion during convective conditions is simulated with a probability density function (pdf) model based on Weil *et al.* (1997). Options are provided to use Pasquill-Gifford (rural) and McElroy-Pooler (urban) dispersion coefficients. Initial plume size from area or volume sources is allowed.

l. Chemical Transformation

Gas phase chemical transformations are treated using parameterized models of SO_2 conversion to SO_4= and NO conversion to NO_3-, HNO_3, and NO_2. Organic aerosol formation is treated. The POSTUTIL program contains an option to re-partition HNO_3 and NO_3- in order to treat the effects of ammonia limitation.

m. Physical Removal

Dry deposition of gaseous pollutants and particulate matter is parameterized in terms of a resistance-based deposition model. Gravitational settling, inertial impaction, and Brownian motion effects on deposition of particulate matter is included. CALPUFF contains an option to evaluate the effects of plume tilt resulting from gravitational settling. Wet deposition of gases and particulate matter is parameterized in terms of a scavenging coefficient approach.

n. Evaluation Studies

Berman, S., J.Y. Ku, J. Zhang and S.T. Rao, 1977. Uncertainties in estimating the mixing depth—Comparing three mixing depth models with profiler measurements, *Atmospheric Environment*, 31: 3023–3039.

Chang, J.C., P. Franzese, K. Chayantrakom and S.R. Hanna, 2001. Evaluations of CALPUFF, HPAC and VLSTRACK with Two Mesoscale Field Datasets. *Journal of Applied Meteorology*, 42(4): 453–466.

Environmental Protection Agency, 1998. Interagency Workgroup on Air Quality Modeling (IWAQM) Phase 2 Summary Report and Recommendations for Modeling Long-Range Transport Impacts. EPA Publication No. EPA–454/R–98–019. Office of Air Quality Planning & Standards, Research Triangle Park, NC.

Irwin, J.S., 1997. A Comparison of CALPUFF Modeling Results with 1997 INEL Field Data Results. In *Air Pollution Modeling and its Application, XII*. Edited by S.E. Gyrning and N. Chaumerliac. Plenum Press, New York, NY.

Irwin, J.S., J.S. Scire and D.G. Strimaitis, 1996. A Comparison of CALPUFF Modeling Results with CAPTEX Field Data Results. In *Air Pollution Modeling and its Application, XI*. Edited by S.E. Gyrning and F.A. Schiermeier. Plenum Press, New York, NY.

Morrison, K, Z–X Wu, J.S. Scire, J. Chenier and T. Jeffs-Schonewille, 2003. CALPUFF-Based Predictive and Reactive Emission Control System. 96th A&WMA Annual Conference & Exhibition, 22–26 June 2003; San Diego, CA.

Schulman, L.L., D.G. Strimaitis and J.S. Scire, 2000. Development and evaluation of the PRIME Plume Rise and Building Downwash Model. JAWMA, 50: 378–390.

Scire, J.S., Z–X Wu, D.G. Strimaitis and G.E. Moore, 2001. The Southwest Wyoming Regional CALPUFF Air Quality Modeling Study—Volume I. Prepared for the Wyoming Dept. of Environmental Quality. Available from Earth Tech at *http://www.src.com*.

Strimaitis, D.G., J.S. Scire and J.C. Chang, 1998. Evaluation of the CALPUFF Dispersion Model with Two Power Plant Data Sets. Tenth Joint Conference on the Application of Air Pollution Meteorology, Phoenix, Arizona. American Meteorological Society, Boston, MA. January 11–16, 1998.

A.5 COMPLEX TERRAIN DISPERSION MODEL PLUS ALGORITHMS FOR UNSTABLE SITUATIONS (CTDMPLUS)

Reference

Perry, S.G., D.J. Burns, L.H. Adams, R.J. Paine, M.G. Dennis, M.T. Mills, D.G. Strimaitis, R.J. Yamartino and E.M. Insley, 1989. User's Guide to the Complex Terrain Dispersion Model Plus Algorithms for Unstable Situations (CTDMPLUS). Volume 1: Model Descriptions and User Instructions. EPA Publication No. EPA–600/8–89–041. Environmental Protection Agency, Research Triangle Park, NC. (NTIS No. PB 89–181424)

Perry, S.G., 1992. CTDMPLUS: A Dispersion Model for Sources near Complex Topography. Part I: Technical Formulations. *Journal of Applied Meteorology*, 31(7): 633–645.

Availability

This model code is available on EPA's Internet SCRAM Web site and also on diskette (as PB 90–504119) from the National Technical Information Service (Section A.0).

Abstract

CTDMPLUS is a refined point source Gaussian air quality model for use in all stability conditions for complex terrain applications. The model contains, in its entirety, the technology of CTDM for stable and neutral conditions. However, CTDMPLUS can also simulate daytime, unstable conditions, and has a number of additional capabilities for improved user friendliness. Its use of meteorological data and terrain information is different from other EPA models; considerable detail for both types of input data is required and is supplied by preprocessors specifically designed for CTDMPLUS. CTDMPLUS requires the parameterization of individual hill shapes using the terrain preprocessor and the association of each model receptor with a particular hill.

a. Recommendation for Regulatory Use

CTDMPLUS is appropriate for the following applications:

- Elevated point sources;
- Terrain elevations above stack top;
- Rural or urban areas;
- Transport distances less than 50 kilometers; and
- One hour to annual averaging times when used with a post-processor program such as CHAVG.

b. Input Requirements

(1) Source data: For each source, user supplies source location, height, stack diameter, stack exit velocity, stack exit temperature, and emission rate; if variable emissions are appropriate, the user supplies hourly values for emission rate, stack exit velocity, and stack exit temperature.

(2) Meteorological data: For applications of CTDMPLUS, multiple level (typically three or more) measurements of wind speed and direction, temperature and turbulence (wind fluctuation statistics) are required to create the basic meteorological data file (''PROFILE''). Such measurements should be obtained up to the representative plume height(s) of interest (*i.e.*, the plume height(s) under those conditions important to the determination of the design concentration). The representative plume height(s) of interest should be determined using an appropriate complex terrain screening procedure (e.g., CTSCREEN) and should be documented in the monitoring/modeling protocol. The necessary meteorological measurements should be obtained from an appropriately sited meteorological tower augmented by SODAR and/or RASS if the representative plume height(s) of interest is above the levels represented by the tower measurements. Meteorological preprocessors then create a SURFACE data file (hourly values of mixed layer heights, surface friction velocity, Monin-Obukhov length and surface roughness length) and a RAWINsonde data file (upper air measurements of pressure, temperature, wind direction, and wind speed).

(3) Receptor data: receptor names (up to 400) and coordinates, and hill number (each receptor must have a hill number assigned).

(4) Terrain data: user inputs digitized contour information to the terrain preprocessor which creates the TERRAIN data file (for up to 25 hills).

c. Output

(1) When CTDMPLUS is run, it produces a concentration file, in either binary or text format (user's choice), and a list file containing a verification of model inputs, *i.e.*,

- Input meteorological data from ''SURFACE'' and ''PROFILE''.
- Stack data for each source.
- Terrain information.
- Receptor information.
- Source-receptor location (line printer map).

(2) In addition, if the case-study option is selected, the listing includes:

- Meteorological variables at plume height.
- Geometrical relationships between the source and the hill.
- Plume characteristics at each receptor, *i.e.*,

—Distance in along-flow and cross flow direction

—Effective plume-receptor height difference

—Effective σ_y & σ_z values, both flat terrain and hill induced (the difference shows the effect of the hill)

—Concentration components due to WRAP, LIFT and FLAT.

(3) If the user selects the TOPN option, a summary table of the top 4 concentrations at each receptor is given. If the ISOR option is selected, a source contribution table for every hour will be printed.

(4) A separate disk file of predicted (1-hour only) concentrations (''CONC'') is written if the user chooses this option. Three forms of output are possible:

(i) A binary file of concentrations, one value for each receptor in the hourly sequence as run;

(ii) A text file of concentrations, one value for each receptor in the hourly sequence as run; or

(iii) A text file as described above, but with a listing of receptor information (names, positions, hill number) at the beginning of the file.

(3) Hourly information provided to these files besides the concentrations themselves includes the year, month, day, and hour information as well as the receptor number with the highest concentration.

d. Type of Model

CTDMPLUS is a refined steady-state, point source plume model for use in all stability conditions for complex terrain applications.

e. Pollutant Types

CTDMPLUS may be used to model non-reactive, primary pollutants.

f. Source-Receptor Relationship

Up to 40 point sources, 400 receptors and 25 hills may be used. Receptors and sources are allowed at any location. Hill slopes are assumed not to exceed 15°, so that the linearized equation of motion for Boussinesq flow are applicable. Receptors upwind of the impingement point, or those associated with any of the hills in the modeling domain, require separate treatment.

g. Plume Behavior

(1) As in CTDM, the basic plume rise algorithms are based on Briggs' (1975) recommendations.

(2) A central feature of CTDMPLUS for neutral/stable conditions is its use of a critical dividing-streamline height (H_c) to separate the flow in the vicinity of a hill into two separate layers. The plume component in the upper layer has sufficient kinetic energy to pass over the top of the hill while streamlines in the lower portion are constrained to flow in a horizontal plane around the hill. Two separate components of CTDMPLUS compute ground-level concentrations resulting from plume material in each of these flows.

(3) The model calculates on an hourly (or appropriate steady averaging period) basis how the plume trajectory (and, in stable/neutral conditions, the shape) is deformed by each hill. Hourly profiles of wind and temperature measurements are used by CTDMPLUS to compute plume rise, plume penetration (a formulation is included to handle penetration into elevated stable layers, based on Briggs (1984)), convective scaling parameters, the value of H_c, and the Froude number above H_c.

h. Horizontal Winds

CTDMPLUS does not simulate calm meteorological conditions. Both scalar and vector wind speed observations can be read by the model. If vector wind speed is unavailable, it is calculated from the scalar wind speed. The assignment of wind speed (either vector or scalar) at plume height is done by either:

• Interpolating between observations above and below the plume height, or

• Extrapolating (within the surface layer) from the nearest measurement height to the plume height.

i. Vertical Wind Speed

Vertical flow is treated for the plume component above the critical dividing streamline height (H_c); see ''Plume Behavior''.

j. Horizontal Dispersion

Horizontal dispersion for stable/neutral conditions is related to the turbulence velocity scale for lateral fluctuations, σ_v, for which a minimum value of 0.2 m/s is used. Convective scaling formulations are used to estimate horizontal dispersion for unstable conditions.

k. Vertical Dispersion

Direct estimates of vertical dispersion for stable/neutral conditions are based on observed vertical turbulence intensity, e.g., σ_w (standard deviation of the vertical velocity fluctuation). In simulating unstable (convective) conditions, CTDMPLUS relies on a skewed, bi-Gaussian probability density function (pdf) description of the vertical velocities to estimate the vertical distribution of pollutant concentration.

l. Chemical Transformation

Chemical transformation is not treated by CTDMPLUS.

m. Physical Removal

Physical removal is not treated by CTDMPLUS (complete reflection at the ground/hill surface is assumed).

n. Evaluation Studies

Burns, D.J., L.H. Adams and S.G. Perry, 1990. Testing and Evaluation of the CTDMPLUS Dispersion Model: Daytime Convective Conditions. Environmental Protection Agency, Research Triangle Park, NC.

Paumier, J.O., S.G. Perry and D.J. Burns, 1990. An Analysis of CTDMPLUS Model Predictions with the Lovett Power Plant Data Base. Environmental Protection Agency, Research Triangle Park, NC.

Paumier, J.O., S.G. Perry and D.J. Burns, 1992. CTDMPLUS: A Dispersion Model for Sources near Complex Topography. Part II: Performance Characteristics. *Journal of Applied Meteorology*, 31(7): 646–660.

A.6 OFFSHORE AND COASTAL DISPERSION MODEL (OCD)

Reference

DiCristofaro, D.C. and S.R. Hanna, 1989. OCD: The Offshore and Coastal Dispersion Model, Version 4. Volume I: User's Guide, and Volume II: Appendices. Sigma Research Corporation, Westford, MA. (NTIS Nos. PB 93–144384 and PB 93–144392; also available at *http://www.epa.gov/scram001/*)

Availability

This model code is available on EPA's Internet SCRAM Web site and also on diskette (as PB 91–505230) from the National Technical Information Service (see Section A.0). Official contact at Minerals Management Service: Mr. Dirk Herkhof, Parkway Atrium Building, 381 Elden Street, Herndon, VA 20170, Phone: (703) 787–1735.

Abstract

(1) OCD is a straight-line Gaussian model developed to determine the impact of offshore emissions from point, area or line sources on the air quality of coastal regions. OCD incorporates overwater plume transport and dispersion as well as changes that occur as the plume crosses the shoreline. Hourly meteorological data are needed from both offshore and onshore locations. These include water surface temperature, overwater air temperature, mixing height, and relative humidity.

(2) Some of the key features include platform building downwash, partial plume penetration into elevated inversions, direct use of turbulence intensities for plume dispersion, interaction with the overland internal boundary layer, and continuous shoreline fumigation.

a. Recommendations for Regulatory Use

OCD has been recommended for use by the Minerals Management Service for emissions located on the Outer Continental Shelf (50 FR 12248; 28 March 1985). OCD is applicable for overwater sources where onshore receptors are below the lowest source height. Where onshore receptors are above the lowest source height, offshore plume transport and dispersion may be modeled on a case-by-case basis in consultation with the appropriate reviewing authority (paragraph 3.0(b)).

b. Input Requirements

(1) Source data: Point, area or line source location, pollutant emission rate, building height, stack height, stack gas temperature, stack inside diameter, stack gas exit velocity, stack angle from vertical, elevation of stack base above water surface and gridded specification of the land/water surfaces. As an option, emission rate, stack gas exit velocity and temperature can be varied hourly.

(2) Meteorological data (over water): Wind direction, wind speed, mixing height, relative humidity, air temperature, water surface temperature, vertical wind direction shear (optional), vertical temperature gradient (optional), turbulence intensities (optional).

(2) Meteorological data:

Over land: Surface weather data from a preprocessor such as PCRAMMET which provides hourly stability class, wind direction, wind speed, ambient temperature, and mixing height are required.

Over water: Hourly values for mixing height, relative humidity, air temperature, and water surface temperature are required; if wind speed/direction are missing, values over land will be used (if available); vertical wind direction shear, vertical temperature gradient, and turbulence intensities are optional.

(3) Receptor data: Location, height above local ground-level, ground-level elevation above the water surface.

c. Output

(1) All input options, specification of sources, receptors and land/water map including locations of sources and receptors.

(2) Summary tables of five highest concentrations at each receptor for each averaging period, and average concentration for entire run period at each receptor.

(3) Optional case study printout with hourly plume and receptor characteristics. Optional table of annual impact assessment from non-permanent activities.

(4) Concentration files written to disk or tape can be used by ANALYSIS postprocessor to produce the highest concentrations for each receptor, the cumulative frequency distributions for each receptor, the tabulation of all concentrations exceeding a given threshold, and the manipulation of hourly concentration files.

d. Type of Model

OCD is a Gaussian plume model constructed on the framework of the MPTER model.

e. Pollutant Types

OCD may be used to model primary pollutants. Settling and deposition are not treated.

f. Source-Receptor Relationship

(1) Up to 250 point sources, 5 area sources, or 1 line source and 180 receptors may be used.

(2) Receptors and sources are allowed at any location.

(3) The coastal configuration is determined by a grid of up to 3600 rectangles. Each element of the grid is designated as either land or water to identify the coastline.

g. Plume Behavior

(1) As in ISC, the basic plume rise algorithms are based on Briggs' recommendations.

(2) Momentum rise includes consideration of the stack angle from the vertical.

(3) The effect of drilling platforms, ships, or any overwater obstructions near the source are used to decrease plume rise using a revised platform downwash algorithm based on laboratory experiments.

(4) Partial plume penetration of elevated inversions is included using the suggestions of Briggs (1975) and Weil and Brower (1984).

(5) Continuous shoreline fumigation is parameterized using the Turner method where complete vertical mixing through the thermal internal boundary layer (TIBL) occurs as soon as the plume intercepts the TIBL.

h. Horizontal Winds

(1) Constant, uniform wind is assumed for each hour.

(2) Overwater wind speed can be estimated from overland wind speed using relationship of Hsu (1981).

(3) Wind speed profiles are estimated using similarity theory (Businger, 1973). Surface layer fluxes for these formulas are calculated from bulk aerodynamic methods.

i. Vertical Wind Speed

Vertical wind speed is assumed equal to zero.

j. Horizontal Dispersion

(1) Lateral turbulence intensity is recommended as a direct estimate of horizontal dispersion. If lateral turbulence intensity is not available, it is estimated from boundary layer theory. For wind speeds less than 8 m/s, lateral turbulence intensity is assumed inversely proportional to wind speed.

(2) Horizontal dispersion may be enhanced because of obstructions near the source. A virtual source technique is used to simulate the initial plume dilution due to downwash.

(3) Formulas recommended by Pasquill (1976) are used to calculate buoyant plume enhancement and wind direction shear enhancement.

(4) At the water/land interface, the change to overland dispersion rates is modeled using a virtual source. The overland dispersion rates can be calculated from either lateral turbulence intensity or Pasquill-Gifford curves. The change is implemented where the plume intercepts the rising internal boundary layer.

k. Vertical Dispersion

(1) Observed vertical turbulence intensity is not recommended as a direct estimate of vertical dispersion. Turbulence intensity should be estimated from boundary layer theory as default in the model. For very stable conditions, vertical dispersion is also a function of lapse rate.

(2) Vertical dispersion may be enhanced because of obstructions near the source. A virtual source technique is used to simulate the initial plume dilution due to downwash.

(3) Formulas recommended by Pasquill (1976) are used to calculate buoyant plume enhancement.

(4) At the water/land interface, the change to overland dispersion rates is modeled using a virtual source. The overland dispersion rates can be calculated from either vertical turbulence intensity or the Pasquill-Gifford coefficients. The change is implemented where the plume intercepts the rising internal boundary layer.

l. Chemical Transformation

Chemical transformations are treated using exponential decay. Different rates can be specified by month and by day or night.

m. Physical Removal

Physical removal is also treated using exponential decay.

n. Evaluation Studies

DiCristofaro, D.C. and S.R. Hanna, 1989. OCD: The Offshore and Coastal Dispersion Model. Volume I: User's Guide. Sigma Research Corporation, Westford, MA.

Hanna, S.R., L.L. Schulman, R.J. Paine and J.E. Pleim, 1984. The Offshore and Coastal Dispersion (OCD) Model User's Guide, Revised. OCS Study, MMS 84–0069. Environmental Research & Technology, Inc., Concord, MA. (NTIS No. PB 86–159803).

Hanna, S.R., L.L. Schulman, R.J. Paine, J.E. Pleim and M. Baer, 1985. Development and Evaluation of the Offshore and Coastal Dispersion (OCD) Model. *Journal of the Air Pollution Control Association*, 35: 1039–1047.

Hanna, S.R. and D.C. DiCristofaro, 1988. Development and Evaluation of the OCD/API Model. Final Report, API Pub. 4461, American Petroleum Institute, Washington, DC.

A. REFERENCES

Benson, P.E., 1979. CALINE3—A Versatile Dispersion Model for Predicting Air Pollution Levels Near Highways and Arterial Streets. Interim Report, Report Number FHWA/CA/TL–79/23. Federal Highway Administration, Washington, DC.

Briggs, G.A., 1975. Plume Rise Predictions. Lectures on Air Pollution and Environmental Impact Analyses. American Meteorological Society, Boston, MA, pp. 59–111.

Briggs, G.A., 1984. Analytical Parameterizations of Diffusion: The Convective Boundary Layer. *Journal of Climate and Applied Meteorology*, 24(11): 1167–1186.

Environmental Protection Agency, 1980. Recommendations on Modeling (October 1980 Meetings). Appendix G to: Summary of Comments and Responses on the October 1980 Proposed Revisions to the Guideline on Air Quality Models. Meteorology and Assessment Division, Office of Research and Development, Research Triangle Park, NC 27711.

Environmental Protection Agency, 1998. Interagency Workgroup on Air Quality Modeling (IWAQM) Phase 2 Summary Report and Recommendations for Modeling Long-Range

Transport Impacts. Publication No. EPA–454/R–98–019. (NTIS No. PB 99–121089).

Escoffier-Czaja, C. and J.S. Scire, 2002. The Effects of Ammonia Limitation on Nitrate Aerosol Formation and Visibility Impacts in Class I Areas. Twelfth AMS/AWMA Conference on the Application of Air Pollution Meteorology, 20–24 May 2002; Norfolk, VA.

Gifford, F.A., Jr. 1976. Turbulent Diffusion Typing Schemes—A Review. *Nuclear Safety*, 17: 68–86.

Horst, T.W., 1983. A Correction to the Gaussian Source-depletion Model. In *Precipitation Scavenging, Dry Deposition and Resuspension*. H. R. Pruppacher, R.G. Semonin and W.G.N. Slinn, eds., Elsevier, NY.

Hsu, S.A., 1981. Models for Estimating Offshore Winds from Onshore Meteorological Measurements. *Boundary Layer Meteorology*, 20: 341–352.

Huber, A.H. and W.H. Snyder, 1976. Building Wake Effects on Short Stack Effluents. Third Symposium on Atmospheric Turbulence, Diffusion and Air Quality, American Meteorological Society, Boston, MA.

Irwin, J.S., 1979. A Theoretical Variation of the Wind Profile Power-Law Exponent as a Function of Surface Roughness and Stability. *Atmospheric Environment*, 13: 191–194.

Liu, M.K. *et al.*, 1976. The Chemistry, Dispersion, and Transport of Air Pollutants Emitted from Fossil Fuel Power Plants in California: Data Analysis and Emission Impact Model. Systems Applications, Inc., San Rafael, CA.

Pasquill, F., 1976. Atmospheric Dispersion Parameters in Gaussian Plume Modeling Part II. Possible Requirements for Change in the Turner Workbook Values. Publication No. EPA–600/4–76–030b. Office of Air Quality Planning & Standards, Research Triangle Park, NC 27711.

Petersen, W.B., 1980. User's Guide for HIWAY–2 A Highway Air Pollution Model. Publication No. EPA–600/8–80–018. Office of Research & Development, Research Triangle Park, NC 27711. (NTIS PB 80–227556)

Rao, T.R. and M.T. Keenan, 1980. Suggestions for Improvement of the EPA–HIWAY Model. *Journal of the Air Pollution Control Association*, 30: 247–256 (and reprinted as Appendix C in Petersen, 1980).

Robe, F.R., Z–X. Wu and J.S. Scire, 2002: Real-time SO_2 Forecasting System with Combined ETA Analysis and CALPUFF Modeling. Proceedings of the 8th International Conference on Harmonisation within Atmospheric Dispersion Modelling for Regulatory Purposes, 14–17 October 2002; Sofia, Bulgaria.

Schulman, L.L. and J.S. Scire, 1980: Buoyant Line and Point Source (BLP) dispersion model user's guide. The Aluminum Association; Washington, DC. (*See* A.2 in this appendix.)

Schulman, L.L. and S.R. Hanna, 1986. Evaluation of Downwash Modification to the Industrial Source Complex Model. *Journal of the Air Pollution Control Association*, 36: 258–264.

Segal, H.M., 1983. Microcomputer Graphics in Atmospheric Dispersion Modeling. *Journal of the Air Pollution Control Association*, 23: 598–600.

Snyder, W.H., R.S. Thompson, R.E. Eskridge, R.E. Lawson, I.P. Castro, J.T. Lee, J.C.R. Hunt, and Y. Ogawa, 1985. The structure of the strongly stratified flow over hills: Dividing streamline concept. *Journal of Fluid Mechanics*, 152: 249–288.

Turner, D.B., 1969. Workbook of Atmospheric Dispersion Estimates. PHS Publication No. 999–26. U.S. Environmental Protection Agency, Research Triangle, Park, NC 27711.

Weil, J.C. and R.P. Brower, 1984. An Updated Gaussian Plume Model for Tall Stacks. *Journal of the Air Pollution Control Association*, 34: 818–827.

Weil, J.C., 1996. A new dispersion algorithm for stack sources in building wakes, Paper 6.6. Ninth Joint Conference on Applications of Air Pollution Meteorology with A&WMA, January 28–February 2, 1996. Atlanta, GA.

Weil, J.C., L.A. Corio, and R.P. Brower, 1997. A PDF dispersion model for buoyant plumes in the convective boundary layer. *Journal of Applied Meteorology*, 36: 982–1003.

Zhang, X., 1993. A computational analysis of the rise, dispersion, and deposition of buoyant plumes. Ph.D. Thesis, Massachusetts Institute of Technology, Cambridge, MA.

Zhang, X. and A.F. Ghoniem, 1993. A computational model for the rise and dispersion of wind-blown, buoyancy-driven plumes—I. Neutrally stratified atmosphere. *Atmospheric Environment*, 15: 2295–2311.

[70 FR 68228, Nov. 9, 2005]

APPENDIX X TO PART 51—EXAMPLES OF ECONOMIC INCENTIVE PROGRAMS

I. INTRODUCTION AND PURPOSE

This appendix contains examples of EIP's which are covered by the EIP rules. Program descriptions identify key provisions which distinguish the different model program types. The examples provide additional information and guidance on various types of regulatory programs collectively referred to as EIP's. The examples include programs involving stationary, area, and mobile sources. The definition section at 40 CFR 51.491 defines an EIP as a program which may include State established emission fees or a system of marketable permits, or a system of State fees on sale or manufacture of products the use of which contributes to O_3 formation, or any combination of the foregoing or other similar measures, as well as incentives and requirements to reduce vehicle emissions and vehicle miles traveled in the area, including any of the transportation control

measures identified in section 108(f). Such programs span a wide spectrum of program designs.

The EIP's are comprised of several elements that, in combination with each other, must insure that the fundamental principles of any regulatory program (including accountability, enforceability and noninterference with other requirements of the Act) are met. There are many possible combinations of program elements that would be acceptable. Also, it is important to emphasize that the effectiveness of an EIP is dependent upon the particular area in which it is implemented. No two areas face the same air quality circumstances and, therefore, effective strategies and programs will differ among areas.

Because of these considerations, the EPA is not specifying one particular design or type of strategy as acceptable for any given EIP. Such specific guidance would potentially discourage States (or other entities with delegated authority to administer parts of an implementation plan) from utilizing other equally viable program designs that may be more appropriate for their situation. Thus, the examples given in this Appendix are general in nature so as to avoid limiting innovation on the part of the States in developing programs tailored to individual State needs.

Another important consideration in designing effective EIP's is the extent to which different strategies, or programs targeted at different types of sources, can complement one another when implemented together as an EIP ''package.'' The EPA encourages States to consider packaging different measures together when such a strategy is likely to increase the overall benefits from the program as a whole. Furthermore, some activities, such as information distribution or public awareness programs, while not EIP's in and of themselves, are often critical to the success of other measures and, therefore, would be appropriate complementary components of a program package. All SIP emissions reductions credits should reflect a consideration of the effectiveness of the entire package.

II. Examples of Stationary and Mobile Source Economic Incentive Strategies

There is a wide variety of programs that fall under the general heading of EIP's. Further, within each general type of program are several different basic program designs. This section describes common types of EIP's that have been implemented, designed, or discussed in the literature for stationary and mobile sources. The program types discussed below do not include all of the possible types of EIP's. Innovative approaches incorporating new ideas in existing programs, different combinations of existing program elements, or wholly new incentive systems provide additional opportunities for States to find ways to meet environmental goals at lower total cost.

A. Emissions Trading Markets

One prominent class of EIP's is based upon the creation of a market in which trading of source-specific emissions requirements may occur. Such programs may include traditional rate-based emissions limits (generally referred to as emissions averaging) or overall limits on a source's total mass emissions per unit of time (generally referred to as an emissions cap). The emissions limits, which may be placed on individual emitting units or on facilities as a whole, may decline over time. The common feature of such programs is that sources have an ongoing incentive to reduce pollution and increased flexibility in meeting their regulatory requirements. A source may meet its own requirements either by directly preventing or controlling emissions or by trading or averaging with another source. Trading or averaging may occur within the same facility, within the same firm, or between different firms. Sources with lower cost abatement alternatives may provide the necessary emissions reductions to sources facing more expensive alternatives. These programs can lower the overall cost of meeting a given total level of abatement. All sources eligible to trade in an emissions market are faced with continuing incentives to find better ways of reducing emissions at the lowest possible cost, even if they are already meeting their own emissions requirements.

Stationary, area, and mobile sources could be allowed to participate in a common emissions trading market. Programs involving emissions trading markets are particularly effective at reducing overall costs when individual affected sources face significantly different emissions control costs. A wider range in control costs among affected sources creates greater opportunities for cost-reducing trades. Thus, for example, areas which face relatively high stationary source control costs relative to mobile source control costs benefit most by including both stationary and mobile sources in a single emissions trading market.

Programs involving emissions trading markets have generally been designated as either emission allowance or emission reduction credit (ERC) trading programs. The Federal Acid Rain Program is an example of an emission allowance trading program, while ''bubbles'' and ''generic bubbles'' created under the EPA's 1986 Emission Trading Policy Statement are examples of ERC trading. Allowance trading programs can establish emission allocations to be effective at the start of a program, at some specific time in the future, or at varying levels over time. An ERC trading program requires ERC's to be

measured against a pre-established emission baseline. Allowance allocations or emission baselines can be established either directly by the EIP rules or by reference to traditional regulations (e.g., RACT requirements). In either type of program, sources can either meet their EIP requirements by maintaining their own emissions within the limits established by the program, or by buying surplus allowances or ERC's from other sources. In any case, the State will need to establish adequate enforceable procedures for certifying and tracking trades, and for monitoring and enforcing compliance with the EIP.

The definition of the commodity to be traded and the design of the administrative procedures the buyer and seller must follow to complete a trade are obvious elements that must be carefully selected to help ensure a successful trading market that achieves the desired environmental goal at the lowest cost. An emissions market is defined as efficient if it achieves the environmental goal at the lowest possible total cost. Any feature of a program that unnecessarily increases the total cost without helping achieve the environmental goals causes market inefficiency. Thus, the design of an emission trading program should be evaluated not only in terms of the likelihood that the program design will ensure that the environmental goals of the program will be met, but also in terms of the costs that the design imposes upon market transactions and the impact of those costs on market efficiency.

Transaction costs are the investment in time and resources to acquire information about the price and availability of allowances or ERC's, to negotiate a trade, and to assure the trade is properly recorded and legally enforceable. All trading markets impose some level of transaction costs. The level of transaction costs in an emissions trading market are affected by various aspects of the design of the market, such as the nature of the procedures for reviewing, approving, and recording trades, the timing of such procedures (*i.e.*, before or after the trade is made), uncertainties in the value of the allowance or credit being traded, the legitimacy of the allowance or credit being offered for sale, and the long-term integrity of the market itself. Emissions trading programs in which every transaction is different, such as programs requiring significant consideration of the differences in the chemical properties or geographic location of the emissions, can result in higher transaction costs than programs with a standardized trading commodity and well-defined rules for acceptable trades. Transaction costs are also affected by the relative ease with which information can be obtained about the availability and price of allowances or credits.

While the market considerations discussed above are clearly important in designing an efficient market to minimize the transaction costs of such a program, other considerations, such as regulatory certainty, enforcement issues, and public acceptance, also clearly need to be factored into the design of any emissions trading program.

B. Fee Programs

A fee on each unit of emissions is a strategy that can provide a direct incentive for sources to reduce emissions. Ideally, fees should be set so as to result in emissions being reduced to the socially optimal level considering the costs of control and the benefits of the emissions reductions. In order to motivate a change in emissions, the fees must be high enough that sources will actively seek to reduce emissions. It is important to note that not all emission fee programs are designed to motivate sources to lower emissions. Fee programs using small fees are designed primarily to generate revenue, often to cover some of the administrative costs of a regulatory program.

There can be significant variations in emission fee programs. For example, potential emissions could be targeted by placing a fee on an input (e.g., a fee on the quantity and BTU content of fuel used in an industrial boiler) rather than on actual emissions. Sources paying a fee on potential emissions could be eligible for a fee waiver or rebate by demonstrating that potential emissions are not actually emitted, such as through a carbon absorber system on a coating operation.

Some fee program variations are designed to mitigate the potentially large amount of revenue that a fee program could generate. Although more complex than a simple fee program, programs that reduce or eliminate the total revenues may be more readily adopted in a SIP than a simple emission fee. Some programs lower the amount of total revenues generated by waiving the fee on some emissions. These programs reduce the total amount of revenue generated, while providing an incentive to decrease emissions. Alternatively, a program may impose higher per-unit fees on a portion of the emissions stream, providing a more powerful but targeted incentive at the same revenue levels. For example, fees could be collected on all emissions in excess of some fixed level. The level could be set as a percentage of a baseline (e.g., fees on emissions above some percentage of historical emissions), or as the lowest emissions possible (e.g., fees on emissions in excess of the lowest demonstrated emissions from the source category).

Other fee programs are ''revenue neutral,'' meaning that the pollution control agency does not receive any net revenues. One way to design a revenue-neutral program is to have both a fee provision and a rebate provision. Rebates must be carefully designed to

avoid lessening the incentive provided by the emission fee. For example, a rebate based on comparing a source's actual emissions and the average emissions for the source category can be designed to be revenue neutral and not diminish the incentive.

Other types of fee programs collect a fee in relation to particular activities or types of products to encourage the use of alternatives. While these fees are not necessarily directly linked to the total amount of emissions from the activity or product, the relative simplicity of a usage fee may make such programs an effective way to lower emissions. An area source example is a construction permit fee for wood stoves. Such a permit fee is directly related to the potential to emit inherent in a wood stove, and not to the actual emissions from each wood stove in use. Fees on raw materials to a manufacturing process can encourage product reformulation (e.g., fees on solvent sold to makers of architectural coatings) or changes in work practices (e.g., fees on specialty solvents and degreasing compounds used in manufacturing).

Road pricing mechanisms are fee programs that are available to curtail low occupancy vehicle use, fund transportation system improvements and control measures, spatially and temporally shift driving patterns, and attempt to effect land usage changes. Primary examples include increased peak period roadway, bridge, or tunnel tolls (this could also be accomplished with automated vehicle identification systems as well), and toll discounts for pooling arrangements and zero-emitting/low-emitting vehicles.

C. Tax Code and Zoning Provisions

Modifications to existing State or local tax codes, zoning provisions, and land use planning can provide effective economic incentives. Possible modifications to encourage emissions reductions cover a broad span of programs, such as accelerated depreciation of capital equipment used for emissions reductions, corporate income tax deductions or credits for emission abatement costs, property tax waivers based on decreasing emissions, exempting low-emitting products from sales tax, and limitations on parking spaces for office facilities. Mobile source strategies include waiving or lowering any of the following for zero- or low-emitting vehicles: vehicle registration fees, vehicle property tax, sales tax, taxicab license fees, and parking taxes.

D. Subsidies

A State may create incentives for reducing emissions by offering direct subsidies, grants or low-interest loans to encourage the purchase of lower-emitting capital equipment, or a switch to less polluting operating practices. Examples of such programs include clean vehicle conversions, starting shuttle bus or van pool programs, and mass transit fare subsidies. Subsidy programs often suffer from a variety of ''free rider'' problems. For instance, subsidies for people or firms who were going to switch to the cleaner alternative anyway lower the effectiveness of the subsidy program, or drive up the cost of achieving a targeted level of emissions reductions.

E. Transportation Control Measures

The following measures are the TCM's listed in section 108(f):

(i) Programs for improved public transit;

(ii) Restriction of certain roads or lanes to, or construction of such roads or lanes for use by, passenger buses or high occupancy vehicles;

(iii) Employer-based transportation management plans, including incentives;

(iv) Trip-reduction ordinances;

(v) Traffic flow improvement programs that achieve emission reductions;

(vi) Fringe and transportation corridor parking facilities serving multiple-occupancy vehicle programs or transit service;

(vii) Programs to limit or restrict vehicle use in downtown areas or other areas of emission concentration particularly during periods of peak use;

(viii) Programs for the provision of all forms of high-occupancy, shared-ride services;

(ix) Programs to limit portions of road surfaces or certain sections of the metropolitan area to the use of non-motorized vehicles or pedestrian use, both as to time and place;

(x) Programs for secure bicycle storage facilities and other facilities, including bicycle lanes, for the convenience and protection of bicyclists, in both public and private areas;

(xi) Programs to control extended idling of vehicles;

(xii) Programs to reduce motor vehicle emissions, consistent with title II, which are caused by extreme cold start conditions;

(xiii) Employer-sponsored programs to permit flexible work schedules;

(xiv) Programs and ordinances to facilitate non-automobile travel, provision and utilization of mass transit, and to generally reduce the need for single-occupant vehicle travel, as part of transportation planning and development efforts of a locality, including programs and ordinances applicable to new shopping centers, special events, and other centers of vehicle activity;

(xv) Programs for new construction and major reconstruction of paths, tracks or areas solely for the use by pedestrian or other non-motorized means of transportation when economically feasible and in the public interest. For purposes of this clause, the Administrator shall also consult with the Secretary of the Interior; and

(xvi) Programs to encourage the voluntary removal from use and the marketplace of pre-1980 model year light-duty vehicles and pre-1980 model light-duty trucks.

[59 FR 16715, Apr. 7, 1994]

APPENDIX Y TO PART 51—GUIDELINES FOR BART DETERMINATIONS UNDER THE REGIONAL HAZE RULE

TABLE OF CONTENTS

I. Introduction and Overview
A. What is the purpose of the guidelines?
B. What does the CAA require generally for improving visibility?
C. What is the BART requirement in the CAA?
D. What types of visibility problems does EPA address in its regulations?
E. What are the BART requirements in EPA's regional haze regulations?
F. What is included in the guidelines?
G. Who is the target audience for the guidelines?
H. Do EPA regulations require the use of these guidelines?
II. How to Identify BART-eligible Sources
A. What are the steps in identifying BART-eligible sources?
1. Step 1: Identify emission units in the BART categories
2. Step 2: Identify the start-up dates of the emission units
3. Step 3: Compare the potential emissions to the 250 ton/yr cutoff
4. Final step: Identify the emission units and pollutants that constitute the BART-eligible source.
III. How to Identify Sources ''Subject to BART''
IV. The BART Determination: Analysis of BART Options
A. What factors must I address in the BART Analysis?
B. What is the scope of the BART review?
C. How does a BART review relate to maximum achievable control technology (MACT) standards under CAA section 112?
D. What are the five basic steps of a case-by-case BART analysis?
1. Step 1: How do I identify all available retrofit emission control techniques?
2. Step 2: How do I determine whether the options identified in Step 1 are technically feasible?
3. Step 3: How do I evaluate technically feasible alternatives?
4. Step 4: For a BART review, what impacts am I expected to calculate and report? What methods does EPA recommend for the impacts analyses?
a. Impact analysis part 1: how do I estimate the costs of control?
b. What do we mean by cost effectiveness?
c. How do I calculate average cost effectiveness?
d. How do I calculate baseline emissions?
e. How do I calculate incremental cost effectiveness?
f. What other information should I provide in the cost impacts analysis?
g. What other things are important to consider in the cost impacts analysis?
h. Impact analysis part 2: How should I analyze and report energy impacts?
i. Impact analysis part 3: How do I analyze ''non-air quality environmental impacts?''
j. Impact analysis part 4: What are examples of non-air quality environmental impacts?
k. How do I take into account a project's ''remaining useful life'' in calculating control costs?
5. Step 5: How should I determine visibility impacts in the BART determination?
E. How do I select the ''best'' alternative, using the results of Steps 1 through 5?
1. Summary of the impacts analysis
2. Selecting a ''best'' alternative
3. In selecting a ''best'' alternative, should I consider the affordability of controls?
4. SO_2 limits for utility boilers
5. NO_X limits for utility boilers
V. Enforceable Limits/Compliance Date

I. INTRODUCTION AND OVERVIEW

A. What is the purpose of the guidelines?

The Clean Air Act (CAA), in sections 169A and 169B, contains requirements for the protection of visibility in 156 scenic areas across the United States. To meet the CAA's requirements, we published regulations to protect against a particular type of visibility impairment known as ''regional haze.'' The regional haze rule is found in this part at 40 CFR 51.300 through 51.309. These regulations require, in 40 CFR 51.308(e), that certain types of existing stationary sources of air pollutants install best available retrofit technology (BART). The guidelines are designed to help States and others (1) identify those sources that must comply with the BART requirement, and (2) determine the level of control technology that represents BART for each source.

B. What does the CAA require generally for improving visibility?

Section 169A of the CAA, added to the CAA by the 1977 amendments, requires States to protect and improve visibility in certain scenic areas of national importance. The scenic areas protected by section 169A are ''the mandatory Class I Federal Areas * * * where visibility is an important value.'' In these guidelines, we refer to these as ''Class I areas.'' There are 156 Class I areas, including 47 national parks (under the jurisdiction of the Department of Interior—National Park

Service), 108 wilderness areas (under the jurisdiction of the Department of the Interior—Fish and Wildlife Service or the Department of Agriculture—U.S. Forest Service), and one International Park (under the jurisdiction of the Roosevelt-Campobello International Commission). The Federal Agency with jurisdiction over a particular Class I area is referred to in the CAA as the Federal Land Manager. A complete list of the Class I areas is contained in 40 CFR 81.401 through 81.437, and you can find a map of the Class I areas at the following Internet site: *http://www.epa.gov/ttn/oarpg/t1/fr__notices/classimp.gif*.

The CAA establishes a national goal of eliminating man-made visibility impairment from all Class I areas. As part of the plan for achieving this goal, the visibility protection provisions in the CAA mandate that EPA issue regulations requiring that States adopt measures in their State implementation plans (SIPs), including long-term strategies, to provide for reasonable progress towards this national goal. The CAA also requires States to coordinate with the Federal Land Managers as they develop their strategies for addressing visibility.

C. What is the BART requirement in the CAA?

1. Under section 169A(b)(2)(A) of the CAA, States must require certain existing stationary sources to install BART. The BART provision applies to ''major stationary sources'' from 26 identified source categories which have the potential to emit 250 tons per year or more of any air pollutant. The CAA requires only sources which were put in place during a specific 15-year time interval to be subject to BART. The BART provision applies to sources that existed as of the date of the 1977 CAA amendments (that is, August 7, 1977) but which had not been in operation for more than 15 years (that is, not in operation as of August 7, 1962).

2. The CAA requires BART review when any source meeting the above description ''emits any air pollutant which may reasonably be anticipated to cause or contribute to any impairment of visibility'' in any Class I area. In identifying a level of control as BART, States are required by section 169A(g) of the CAA to consider:

(a) The costs of compliance,

(b) The energy and non-air quality environmental impacts of compliance,

(c) Any existing pollution control technology in use at the source,

(d) The remaining useful life of the source, and

(e) The degree of visibility improvement which may reasonably be anticipated from the use of BART.

3. The CAA further requires States to make BART emission limitations part of their SIPs. As with any SIP revision, States must provide an opportunity for public comment on the BART determinations, and EPA's action on any SIP revision will be subject to judicial review.

D. What types of visibility problems does EPA address in its regulations?

1. We addressed the problem of visibility in two phases. In 1980, we published regulations addressing what we termed ''reasonably attributable'' visibility impairment. Reasonably attributable visibility impairment is the result of emissions from one or a few sources that are generally located in close proximity to a specific Class I area. The regulations addressing reasonably attributable visibility impairment are published in 40 CFR 51.300 through 51.307.

2. On July 1, 1999, we amended these regulations to address the second, more common, type of visibility impairment known as ''regional haze.'' Regional haze is the result of the collective contribution of many sources over a broad region. The regional haze rule slightly modified 40 CFR 51.300 through 51.307, including the addition of a few definitions in § 51.301, and added new §§ 51.308 and 51.309.

E. What are the BART requirements in EPA's regional haze regulations?

1. In the July 1, 1999 rulemaking, we added a BART requirement for regional haze. We amended the BART requirements in 2005. You will find the BART requirements in 40 CFR 51.308(e). Definitions of terms used in 40 CFR 51.308(e)(1) are found in 40 CFR 51.301.

2. As we discuss in detail in these guidelines, the regional haze rule codifies and clarifies the BART provisions in the CAA. The rule requires that States identify and list ''BART-eligible sources,'' that is, that States identify and list those sources that fall within the 26 source categories, were put in place during the 15-year window of time from 1962 to 1977, and have potential emissions greater than 250 tons per year. Once the State has identified the BART-eligible sources, the next step is to identify those BART-eligible sources that may ''emit any air pollutant which may reasonably be anticipated to cause or contribute to any impairment of visibility.'' Under the rule, a source which fits this description is ''subject to BART.'' For each source subject to BART, 40 CFR 51.308(e)(1)(ii)(A) requires that States identify the level of control representing BART after considering the factors set out in CAA section 169A(g), as follows:

—States must identify the best system of continuous emission control technology for each source subject to BART taking into account the technology available, the costs of compliance, the energy and non-air quality environmental impacts of compliance, any pollution control equipment in use at the source, the remaining useful

life of the source, and the degree of visibility improvement that may be expected from available control technology.

3. After a State has identified the level of control representing BART (if any), it must establish an emission limit representing BART and must ensure compliance with that requirement no later than 5 years after EPA approves the SIP. States may establish design, equipment, work practice or other operational standards when limitations on measurement technologies make emission standards infeasible.

F. What is included in the guidelines?

1. The guidelines provide a process for making BART determinations that States can use in implementing the regional haze BART requirements on a source-by-source basis, as provided in 40 CFR 51.308(e)(1). States must follow the guidelines in making BART determinations on a source-by-source basis for 750 megawatt (MW) power plants but are not required to use the process in the guidelines when making BART determinations for other types of sources.

2. The BART analysis process, and the contents of these guidelines, are as follows:

(a) *Identification of all BART-eligible sources.* Section II of these guidelines outlines a step-by-step process for identifying BART-eligible sources.

(b) *Identification of sources subject to BART.* As noted above, sources ''subject to BART'' are those BART-eligible sources which ''emit a pollutant which may reasonably be anticipated to cause or contribute to any impairment of visibility in any Class I area.'' We discuss considerations for identifying sources subject to BART in section III of the guidance.

(c) *The BART determination process.* For each source subject to BART, the next step is to conduct an analysis of emissions control alternatives. This step includes the identification of available, technically feasible retrofit technologies, and for each technology identified, an analysis of the cost of compliance, the energy and non-air quality environmental impacts, and the degree of visibility improvement in affected Class I areas resulting from the use of the control technology. As part of the BART analysis, the State should also take into account the remaining useful life of the source and any existing control technology present at the source. For each source, the State will determine a ''best system of continuous emission reduction'' based upon its evaluation of these factors. Procedures for the BART determination step are described in section IV of these guidelines.

(d) *Emissions limits.* States must establish emission limits, including a deadline for compliance, consistent with the BART determination process for each source subject to BART. Considerations related to these limits are discussed in section V of these guidelines.

G. Who is the target audience for the guidelines?

1. The guidelines are written primarily for the benefit of State, local and Tribal agencies, and describe a process for making the BART determinations and establishing the emission limitations that must be included in their SIPs or Tribal implementation plans (TIPs). Throughout the guidelines, which are written in a question and answer format, we ask questions ''How do I * * *?'' and answer with phrases ''you should * * *, you must * * *'' The ''you'' means a State, local or Tribal agency conducting the analysis. We have used this format to make the guidelines simpler to understand, but we recognize that States have the authority to require source owners to assume part of the analytical burden, and that there will be differences in how the supporting information is collected and documented. We also recognize that data collection, analysis, and rule development may be performed by Regional Planning Organizations, for adoption within each SIP or TIP.

2. The preamble to the 1999 regional haze rule discussed at length the issue of Tribal implementation of the requirements to submit a plan to address visibility. As explained there, requirements related to visibility are among the programs for which Tribes may be determined eligible and receive authorization to implement under the ''Tribal Authority Rule'' (''TAR'') (40 CFR 49.1 through 49.11). Tribes are not subject to the deadlines for submitting visibility implementation plans and may use a modular approach to CAA implementation. We believe there are very few BART-eligible sources located on Tribal lands. Where such sources exist, the affected Tribe may apply for delegation of implementation authority for this rule, following the process set forth in the TAR.

H. Do EPA regulations require the use of these guidelines?

Section 169A(b) requires us to issue guidelines for States to follow in establishing BART emission limitations for fossil-fuel fired power plants having a capacity in excess of 750 megawatts. This document fulfills that requirement, which is codified in 40 CFR 51.308(e)(1)(ii)(B). The guidelines establish an approach to implementing the requirements of the BART provisions of the regional haze rule; we believe that these procedures and the discussion of the requirements of the regional haze rule and the CAA should be useful to the States. For sources other than 750 MW power plants, however, States retain the discretion to adopt approaches that differ from the guidelines.

II. HOW TO IDENTIFY BART-ELIGIBLE SOURCES

This section provides guidelines on how to identify BART-eligible sources. A BART-eligible source is an existing stationary source in any of 26 listed categories which meets criteria for startup dates and potential emissions.

A. What are the steps in identifying BART-eligible sources?

Figure 1 shows the steps for identifying whether the source is a ''BART-eligible source:''

Step 1: Identify the emission units in the BART categories,

Step 2: Identify the start-up dates of those emission units, and

Step 3: Compare the potential emissions to the 250 ton/yr cutoff.

Figure 1. How to determine whether a source is BART-eligible:

Step 1: Identify emission units in the BART categories

Does the plant contain emissions units in one or more of the 26 source categories?
➜ No ➜ Stop
➜ Yes ➜ Proceed to Step 2

Step 2: Identify the start-up dates of these emission units

Do any of these emissions units meet the following two tests?
In existence on August 7, 1977
AND
Began operation after August 7, 1962
➜ No ➜ Stop
➜ Yes ➜ Proceed to Step 3

Step 3: Compare the potential emissions from these emission units to the 250 ton/yr cutoff

Identify the ''stationary source'' that includes the emission units you identified in Step 2.
Add the current potential emissions from all the emission units identified in Steps 1 and 2 that are included within the ''stationary source'' boundary.
Are the potential emissions from these units 250 tons per year or more for any visibility-impairing pollutant?
➜ No ➜ Stop
➜ Yes ➜ These emissions units comprise the ''BART-eligible source.''

1. Step 1: Identify Emission Units in the BART Categories

1. The BART requirement only applies to sources in specific categories listed in the CAA. The BART requirement does not apply to sources in other source categories, regardless of their emissions. The listed categories are:

(1) Fossil-fuel fired steam electric plants of more than 250 million British thermal units (BTU) per hour heat input,
(2) Coal cleaning plants (thermal dryers),
(3) Kraft pulp mills,
(4) Portland cement plants,
(5) Primary zinc smelters,
(6) Iron and steel mill plants,
(7) Primary aluminum ore reduction plants,
(8) Primary copper smelters,
(9) Municipal incinerators capable of charging more than 250 tons of refuse per day,
(10) Hydrofluoric, sulfuric, and nitric acid plants,
(11) Petroleum refineries,
(12) Lime plants,
(13) Phosphate rock processing plants,
(14) Coke oven batteries,
(15) Sulfur recovery plants,
(16) Carbon black plants (furnace process),
(17) Primary lead smelters,
(18) Fuel conversion plants,
(19) Sintering plants,
(20) Secondary metal production facilities,
(21) Chemical process plants,
(22) Fossil-fuel boilers of more than 250 million BTUs per hour heat input,
(23) Petroleum storage and transfer facilities with a capacity exceeding 300,000 barrels,
(24) Taconite ore processing facilities,
(25) Glass fiber processing plants, and
(26) Charcoal production facilities.

2. Some plants may have emission units from more than one category, and some emitting equipment may fit into more than one category. Examples of this situation are sulfur recovery plants at petroleum refineries, coke oven batteries and sintering plants at steel mills, and chemical process plants at refineries. For Step 1, you identify all of the emissions units at the plant that fit into one or more of the listed categories. You do not identify emission units in other categories.

Example: A mine is collocated with an electric steam generating plant and a coal cleaning plant. You would identify emission units associated with the electric steam generating plant and the coal cleaning plant, because they are listed categories, but not the mine, because coal mining is not a listed category.

3. The category titles are generally clear in describing the types of equipment to be listed. Most of the category titles are very broad descriptions that encompass all emission units associated with a plant site (for example, ''petroleum refining'' and ''kraft pulp mills''). This same list of categories appears in the PSD regulations. States and source owners need not revisit any interpretations of the list made previously for purposes of the PSD program. We provide the following clarifications for a few of the category titles:

(1) ''*Steam electric plants of more than 250 million BTU/hr heat input.*'' Because the category refers to ''plants,'' we interpret this

category title to mean that boiler capacities should be aggregated to determine whether the 250 million BTU/hr threshold is reached. This definition includes only those plants that generate electricity for sale. Plants that cogenerate steam and electricity also fall within the definition of ''steam electric plants''. Similarly, combined cycle turbines are also considered ''steam electric plants'' because such facilities incorporate heat recovery steam generators. Simple cycle turbines, in contrast, are not ''steam electric plants'' because these turbines typically do not generate steam.

Example: A stationary source includes a steam electric plant with three 100 million BTU/hr boilers. Because the aggregate capacity exceeds 250 million BTU/hr for the ''plant,'' these boilers would be identified in Step 2.

(2) *''Fossil-fuel boilers of more than 250 million BTU/hr heat input.''* We interpret this category title to cover only those boilers that are individually greater than 250 million BTU/hr. However, an individual boiler smaller than 250 million BTU/hr should be subject to BART if it is an integral part of a process description at a plant that is in a different BART category—for example, a boiler at a Kraft pulp mill that, in addition to providing steam or mechanical power, uses the waste liquor from the process as a fuel. In general, if the process uses any by-product of the boiler and the boiler's function is to serve the process, then the boiler is integral to the process and should be considered to be part of the process description.

Also, you should consider a multi-fuel boiler to be a ''fossil-fuel boiler'' if it burns any amount of fossil fuel. You may take federally and State enforceable operational limits into account in determining whether a multi-fuel boiler's fossil fuel capacity exceeds 250 million Btu/hr.

(3) *''Petroleum storage and transfer facilities with a capacity exceeding 300,000 barrels.''* The 300,000 barrel cutoff refers to total facility-wide tank capacity for tanks that were put in place within the 1962–1977 time period, and includes gasoline and other petroleum-derived liquids.

(4) *''Phosphate rock processing plants.''* This category descriptor is broad, and includes all types of phosphate rock processing facilities, including elemental phosphorous plants as well as fertilizer production plants.

(5) *''Charcoal production facilities.''* We interpret this category to include charcoal briquet manufacturing and activated carbon production.

(6) *''Chemical process plants.''* and pharmaceutical manufacturing. Consistent with past policy, we interpret the category ''chemical process plants'' to include those facilities within the 2-digit Standard Industrial Classification (SIC) code 28. Accordingly, we interpret the term ''chemical process plants'' to include pharmaceutical manufacturing facilities.

(7) *''Secondary metal production.''* We interpret this category to include nonferrous metal facilities included within SIC code 3341, and secondary ferrous metal facilities that we also consider to be included within the category ''iron and steel mill plants.''

(8) *''Primary aluminum ore reduction.''* We interpret this category to include those facilities covered by 40 CFR 60.190, the new source performance standard (NSPS) for primary aluminum ore reduction plants. This definition is also consistent with the definition at 40 CFR 63.840.

2. Step 2: Identify the Start-Up Dates of the Emission Units

1. Emissions units listed under Step 1 are BART-eligible only if they were ''in existence'' on August 7, 1977 but were not ''in operation'' before August 7, 1962.

What does ''in existence on August 7, 1977'' mean?

2. The regional haze rule defines ''in existence'' to mean that:

''the owner or operator has obtained all necessary preconstruction approvals or permits required by Federal, State, or local air pollution emissions and air quality laws or regulations and either has (1) begun, or caused to begin, a continuous program of physical on-site construction of the facility or (2) entered into binding agreements or contractual obligations, which cannot be canceled or modified without substantial loss to the owner or operator, to undertake a program of construction of the facility to be completed in a reasonable time.'' 40 CFR 51.301.

As this definition is essentially identical to the definition of ''commence construction'' as that term is used in the PSD regulations, the two terms mean the same thing. *See* 40 CFR 51.165(a)(1)(xvi) and 40 CFR 52.21(b)(9). Under this definition, an emissions unit could be ''in existence'' even if it did not begin operating until several years after 1977.

Example: The owner of a source obtained all necessary permits in early 1977 and entered into binding construction agreements in June 1977. Actual on-site construction began in late 1978, and construction was completed in mid-1979. The source began operating in September 1979. The emissions unit was ''in existence'' as of August 7, 1977.

Major stationary sources which commenced construction AFTER August 7, 1977 (*i.e.*, major stationary sources which were not ''in existence'' on August 7, 1977) were subject to new source review (NSR) under the PSD program. Thus, the August 7, 1977 ''in existence'' test is essentially the same

thing as the identification of emissions units that were grandfathered from the NSR review requirements of the 1977 CAA amendments.

3. Sources are not BART-eligible if the only change at the plant during the relevant time period was the addition of pollution controls. For example, if the only change at a copper smelter during the 1962 through 1977 time period was the addition of acid plants for the reduction of SO_2 emissions, these emission controls would not by themselves trigger a BART review.

What does ''in operation before August 7, 1962'' mean?

An emissions unit that meets the August 7, 1977 ''in existence'' test is not BART-eligible if it was in operation before August 7, 1962. ''In operation'' is defined as ''engaged in activity related to the primary design function of the source.'' This means that a source must have begun actual operations by August 7, 1962 to satisfy this test.

Example: The owner or operator entered into binding agreements in 1960. Actual onsite construction began in 1961, and construction was complete in mid-1962. The source began operating in September 1962. The emissions unit *was not* ''in operation'' before August 7, 1962 and is therefore subject to BART.

What is a ''reconstructed source?'

1. Under a number of CAA programs, an existing source which is completely or substantially rebuilt is treated as a new source. Such ''reconstructed'' sources are treated as new sources as of the time of the reconstruction. Consistent with this overall approach to reconstructions, the definition of BART-eligible facility (reflected in detail in the definition of ''existing stationary facility'') includes consideration of sources that were in operation before August 7, 1962, but were reconstructed during the August 7, 1962 to August 7, 1977 time period.

2. Under the regional haze regulations at 40 CFR 51.301, a reconstruction has taken place if ''the fixed capital cost of the new component exceeds 50 percent of the fixed capital cost of a comparable entirely new source.'' The rule also states that ''[a]ny final decision as to whether reconstruction has occurred must be made in accordance with the provisions of §§ 60.15 (f)(1) through (3) of this title.'' ''[T]he provisions of §§ 60.15(f)(1) through (3)'' refers to the general provisions for New Source Performance Standards (NSPS). Thus, the same policies and procedures for identifying reconstructed ''affected facilities'' under the NSPS program must also be used to identify reconstructed ''stationary sources'' for purposes of the BART requirement.

3. You should identify reconstructions on an emissions unit basis, rather than on a plantwide basis. That is, you need to identify only the reconstructed emission units meeting the 50 percent cost criterion. You should include reconstructed emission units in the list of emission units you identified in Step 1. You need consider as possible reconstructions only those emissions units with the potential to emit more than 250 tons per year of any visibility-impairing pollutant.

4. The ''in operation'' and ''in existence'' tests apply to reconstructed sources. If an emissions unit was reconstructed and began actual operation before August 7, 1962, it is not BART-eligible. Similarly, any emissions unit for which a reconstruction ''commenced'' after August 7, 1977, is not BART-eligible.

How are modifications treated under the BART provision?

1. The NSPS program and the major source NSR program both contain the concept of modifications. In general, the term ''modification'' refers to any physical change or change in the method of operation of an emissions unit that results in an increase in emissions.

2. The BART provision in the regional haze rule contains no explicit treatment of modifications or how modified emissions units, previously subject to the requirement to install best available control technology (BACT), lowest achievable emission rate (LAER) controls, and/or NSPS are treated under the rule. As the BART requirements in the CAA do not appear to provide any exemption for sources which have been modified since 1977, the best interpretation of the CAA visibility provisions is that a subsequent modification does not change a unit's construction date for the purpose of BART applicability. Accordingly, if an emissions unit began operation before 1962, it is not BART-eligible if it was modified between 1962 and 1977, so long as the modification is not also a ''reconstruction.'' On the other hand, an emissions unit which began operation within the 1962–1977 time window, but was modified after August 7, 1977, is BART-eligible. We note, however, that if such a modification was a major modification that resulted in the installation of controls, the State will take this into account during the review process and may find that the level of controls already in place are consistent with BART.

3. Step 3: Compare the Potential Emissions to the 250 Ton/Yr Cutoff

The result of Steps 1 and 2 will be a list of emissions units at a given plant site, including reconstructed emissions units, that are within one or more of the BART categories and that were placed into operation within

the 1962–1977 time window. The third step is to determine whether the total emissions represent a current potential to emit that is greater than 250 tons per year of any single visibility impairing pollutant. Fugitive emissions, to the extent quantifiable, must be counted. In most cases, you will add the potential emissions from all emission units on the list resulting from Steps 1 and 2. In a few cases, you may need to determine whether the plant contains more than one ''stationary source'' as the regional haze rule defines that term, and as we explain further below.

What pollutants should I address?

Visibility-impairing pollutants include the following:

(1) Sulfur dioxide (SO_2),

(2) Nitrogen oxides (NO_X), and

(3) Particulate matter.

You may use PM_{10} as an indicator for particulate matter in this intial step. [Note that we do not recommend use of total suspended particulates (TSP) as in indicator for particulate matter.] As emissions of PM_{10} include the components of $PM_{2.5}$ as a subset, there is no need to have separate 250 ton thresholds for PM_{10} and $PM_{2.5}$; 250 tons of PM_{10} represents at most 250 tons of $PM_{2.5}$, and at most 250 tons of any individual particulate species such as elemental carbon, crustal material, etc.

However, if you determine that a source of particulate matter is BART-eligible, it will be important to distinguish between the fine and coarse particle components of direct particulate emissions in the remainder of the BART analysis, including for the purpose of modeling the source's impact on visibility. This is because although both fine and coarse particulate matter contribute to visibility impairment, the long-range transport of fine particles is of particular concern in the formation of regional haze. Thus, for example, air quality modeling results used in the BART determination will provide a more accurate prediction of a source's impact on visibility if the inputs into the model account for the relative particle size of any directly emitted particulate matter (*i.e.* PM_{10} vs. $PM_{2.5}$).

You should exercise judgment in deciding whether the following pollutants impair visibility in an area:

(4) Volatile organic compounds (VOC), and

(5) Ammonia and ammonia compounds.

You should use your best judgment in deciding whether VOC or ammonia emissions from a source are likely to have an impact on visibility in an area. Certain types of VOC emissions, for example, are more likely to form secondary organic aerosols than others.[1] Similarly, controlling ammonia emissions in some areas may not have a significant impact on visibility. You need not provide a formal showing of an individual decision that a source of VOC or ammonia emissions is not subject to BART review. Because air quality modeling may not be feasible for individual sources of VOC or ammonia, you should also exercise your judgement in assessing the degree of visibility impacts due to emissions of VOC and emissions of ammonia or ammonia compounds. You should fully document the basis for judging that a VOC or ammonia source merits BART review, including your assessment of the source's contribution to visibility impairment.

What does the term ''potential'' emissions mean?

The regional haze rule defines potential to emit as follows:

''Potential to emit'' means the maximum capacity of a stationary source to emit a pollutant under its physical and operational design. Any physical or operational limitation on the capacity of the source to emit a pollutant including air pollution control equipment and restrictions on hours of operation or on the type or amount of material combusted, stored, or processed, shall be treated as part of its design if the limitation or the effect it would have on emissions is federally enforceable. Secondary emissions do not count in determining the potential to emit of a stationary source.

The definition of ''potential to emit'' means that a source which actually emits less than 250 tons per year of a visibility-impairing pollutant is BART-eligible if its emissions would exceed 250 tons per year when operating at its maximum capacity given its physical and operational design (and considering all federally enforceable and State enforceable permit limits.)

Example: A source, while operating at one-fourth of its capacity, emits 75 tons per year of SO_2. If it were operating at 100 percent of its maximum capacity, the source would emit 300 tons per year. Because under the above definition such a source would have ''potential'' emissions that exceed 250 tons per year, the source (if in a listed category and built during the 1962–1977 time window) would be BART-eligible.

How do I identify whether a plant has more than one ''stationary source?''

1. The regional haze rule, in 40 CFR 51.301, defines a stationary source as a ''building, structure, facility or installation which

[1] *Fine particles: Overview of Atmospheric Chemistry, Sources of Emissions, and Ambient Monitoring Data,* Memorandum to Docket OAR 2002–006, April 1, 2005.

emits or may emit any air pollutant.''[2] The rule further defines ''building, structure or facility'' as:

all of the pollutant-emitting activities which belong to the same industrial grouping, are located on one or more contiguous or adjacent properties, and are under the control of the same person (or persons under common control). Pollutant-emitting activities must be considered as part of the same industrial grouping if they belong to the same Major Group (*i.e.*, which have the same two-digit code) as described in the Standard Industrial Classification Manual, 1972 as amended by the 1977 Supplement (U.S. Government Printing Office stock numbers 4101–0066 and 003–005–00176–0, respectively).

2. In applying this definition, it is necessary to determine which facilities are located on ''contiguous or adjacent properties.'' Within this contiguous and adjacent area, it is also necessary to group those emission units that are under ''common control.'' We note that these plant boundary issues and ''common control'' issues are very similar to those already addressed in implementation of the title V operating permits program and in NSR.

3. For emission units within the ''contiguous or adjacent'' boundary and under common control, you must group emission units that are within the same industrial grouping (that is, associated with the same 2-digit SIC code) in order to define the stationary source.[3] For most plants on the BART source category list, there will only be one 2-digit SIC that applies to the entire plant. For example, all emission units associated with kraft pulp mills are within SIC code 26, and chemical process plants will generally include emission units that are all within SIC code 28. The ''2-digit SIC test'' applies in the same way as the test is applied in the major source NSR programs.[4]

4. For purposes of the regional haze rule, you must group emissions from all emission units put in place within the 1962–1977 time period that are within the 2-digit SIC code, even if those emission units are in different categories on the BART category list.

Examples: A chemical plant which started operations within the 1962 to 1977 time period manufactures hydrochloric acid (within the category title ''Hydrochloric, sulfuric, and nitric acid plants'') and various organic chemicals (within the category title ''chemical process plants''). All of the emission units are within SIC code 28 and, therefore, all the emission units are considered in determining BART eligibility of the plant. You sum the emissions over all of these emission units to see whether there are more than 250 tons per year of potential emissions.

A steel mill which started operations within the 1962 to 1977 time period includes a sintering plant, a coke oven battery, and various other emission units. All of the emission units are within SIC code 33. You sum the emissions over all of these emission units to see whether there are more than 250 tons per year of potential emissions.

4. Final Step: Identify the Emissions Units and Pollutants That Constitute the BART-Eligible Source

If the emissions from the list of emissions units at a stationary source exceed a potential to emit of 250 tons per year for any visibility-impairing pollutant, then that collection of emissions units is a BART-eligible source.

Example: A stationary source comprises the following two emissions units, with the following potential emissions:

Emissions unit A
- 200 tons/yr SO_2
- 150 tons/yr NO_X
- 25 tons/yr PM

Emissions unit B
- 100 tons/yr SO_2
- 75 tons/yr NO_X
- 10 tons/yr PM

For this example, potential emissions of SO_2 are 300 tons/yr, which exceeds the 250 tons/yr threshold. Accordingly, the entire ''stationary source'', that is, emissions units A and B, may be subject to a BART review for SO_2, NO_X, and PM, even though the potential emissions of PM and NO_X at each emissions unit are less than 250 tons/yr each.

Example: The total potential emissions, obtained by adding the potential emissions of

[2] NOTE: Most of these terms and definitions are the same for regional haze and the 1980 visibility regulations. For the regional haze rule we use the term ''BART-eligible source'' rather than ''existing stationary facility'' to clarify that only a limited subset of existing stationary sources are subject to BART.

[3] We recognize that we are in a transition period from the use of the SIC system to a new system called the North American Industry Classification System (NAICS). For purposes of identifying BART-eligible sources, you may use either 2-digit SICS or the equivalent in the NAICS system.

[4] NOTE: The concept of support facility used for the NSR program applies here as well. Support facilities, that is facilities that convey, store or otherwise assist in the production of the principal product, must be grouped with primary facilities even when the facilities fall wihin separate SIC codes. For purposes of BART reviews, however, such support facilities (a) must be within one of the 26 listed source categories and (b) must have been in existence as of August 7, 1977, and (c) must not have been in operation as of August 7, 1962.

all emission units in a listed category at a plant site, are as follows:

200 tons/yr SO_2
150 tons/yr NO_X
25 tons/yr PM

Even though total emissions exceed 250 tons/yr, no individual regulated pollutant exceeds 250 tons/yr and this source is not BART-eligible.

Can States establish de minimis levels of emissions for pollutants at BART-eligible sources?

In order to simplify BART determinations, States may choose to identify de minimis levels of pollutants at BART-eligible sources (but are not required to do so). De minimis values should be identified with the purpose of excluding only those emissions so minimal that they are unlikely to contribute to regional haze. Any de minimis values that you adopt must not be higher than the PSD applicability levels: 40 tons/yr for SO_2 and NO_X and 15 tons/yr for PM_{10}. These de minimis levels may only be applied on a plant-wide basis.

III. How To Identify Sources ''Subject to BART''

Once you have compiled your list of BART-eligible sources, you need to determine whether (1) to make BART determinations for all of them or (2) to consider exempting some of them from BART because they may not reasonably be anticipated to cause or contribute to any visibility impairment in a Class I area. If you decide to make BART determinations for all the BART-eligible sources on your list, you should work with your regional planning organization (RPO) to show that, collectively, they cause or contribute to visibility impairment in at least one Class I area. You should then make individual BART determinations by applying the five statutory factors discussed in Section IV below.

On the other hand, you also may choose to perform an initial examination to determine whether a particular BART-eligible source or group of sources causes or contributes to visibility impairment in nearby Class I areas. If your analysis, or information submitted by the source, shows that an individual source or group of sources (or certain pollutants from those sources) is not reasonably anticipated to cause or contribute to any visibility impairment in a Class I area, then you do not need to make BART determinations for that source or group of sources (or for certain pollutants from those sources). In such a case, the source is not ''subject to BART'' and you do not need to apply the five statutory factors to make a BART determination. This section of the Guideline discusses several approaches that you can use to exempt sources from the BART determination process.

A. What Steps Do I Follow To Determine Whether a Source or Group of Sources Cause or Contribute to Visibility Impairment for Purposes of BART?

1. How Do I Establish a Threshold?

One of the first steps in determining whether sources cause or contribute to visibility impairment for purposes of BART is to establish a threshold (measured in deciviews) against which to measure the visibility impact of one or more sources. A single source that is responsible for a 1.0 deciview change or more should be considered to ''cause'' visibility impairment; a source that causes less than a 1.0 deciview change may still contribute to visibility impairment and thus be subject to BART.

Because of varying circumstances affecting different Class I areas, the appropriate threshold for determining whether a source ''contributes to any visibility impairment'' for the purposes of BART may reasonably differ across States. As a general matter, any threshold that you use for determining whether a source ''contributes'' to visibility impairment should not be higher than 0.5 deciviews.

In setting a threshold for ''contribution,'' you should consider the number of emissions sources affecting the Class I areas at issue and the magnitude of the individual sources' impacts.[5] In general, a larger number of sources causing impacts in a Class I area may warrant a lower contribution threshold. States remain free to use a threshold lower than 0.5 deciviews if they conclude that the location of a large number of BART-eligible sources within the State and in proximity to a Class I area justify this approach.[6]

2. What Pollutants Do I Need To Consider?

You must look at SO_2, NO_X, and direct particulate matter (PM) emissions in determining whether sources cause or contribute to visibility impairment, including both PM_{10} and $PM_{2.5}$. Consistent with the approach for identifying your BART-eligible sources, you do not need to consider less

[5] We expect that regional planning organizations will have modeling information that identifies sources affecting visibility in individual class I areas.

[6] Note that the contribution threshold should be used to determine whether an individual source is reasonably anticipated to contribute to visibility impairment. You should not aggregate the visibility effects of multiple sources and compare their collective effects against your contribution threshold because this would inappropriately create a ''contribute to contribution'' test.

than de minimis emissions of these pollutants from a source.

As explained in section II, you must use your best judgement to determine whether VOC or ammonia emissions are likely to have an impact on visibility in an area. In addition, although as explained in Section II, you may use PM_{10} an indicator for particulate matter in determining whether a source is BART-eligible, in determining whether a source contributes to visibility impairment, you should distinguish between the fine and coarse particle components of direct particulate emissions. Although both fine and coarse particulate matter contribute to visibility impairment, the long-range transport of fine particles is of particular concern in the formation of regional haze. Air quality modeling results used in the BART determination will provide a more accurate prediction of a source's impact on visibility if the inputs into the model account for the relative particle size of any directly emitted particulate matter (*i.e.*, PM_{10} vs. $PM_{2.5}$).

3. What Kind of Modeling Should I Use To Determine Which Sources and Pollutants Need Not Be Subject to BART?

This section presents several options for determining that certain sources need not be subject to BART. These options rely on different modeling and/or emissions analysis approaches. They are provided for your guidance. You may also use other reasonable approaches for analyzing the visibility impacts of an individual source or group of sources.

Option 1: Individual Source Attribution Approach (Dispersion Modeling)

You can use dispersion modeling to determine that an individual source cannot reasonably be anticipated to cause or contribute to visibility impairment in a Class I area and thus is not subject to BART. Under this option, you can analyze an individual source's impact on visibility as a result of its emissions of SO_2, NO_X and direct PM emissions. Dispersion modeling cannot currently be used to estimate the predicted impacts on visibility from an individual source's emissions of VOC or ammonia. You may use a more qualitative assessment to determine on a case-by-case basis which sources of VOC or ammonia emissions may be likely to impair visibility and should therefore be subject to BART review, as explained in section II.A.3. above.

You can use CALPUFF[7] or other appropriate model to predict the visibility impacts from a single source at a Class I area. CALPUFF is the best regulatory modeling application currently available for predicting a single source's contribution to visibility impairment and is currently the only EPA-approved model for use in estimating single source pollutant concentrations resulting from the long range transport of primary pollutants.[8] It can also be used for some other purposes, such as the visibility assessments addressed in today's rule, to account for the chemical transformation of SO_2 and NO_X.

There are several steps for making an individual source attribution using a dispersion model:

1. *Develop a modeling protocol.* Some critical items to include in the protocol are the meteorological and terrain data that will be used, as well as the source-specific information (stack height, temperature, exit velocity, elevation, and emission rates of applicable pollutants) and receptor data from appropriate Class I areas. We recommend following EPA's *Interagency Workgroup on Air Quality Modeling (IWAQM) Phase 2 Summary Report and Recommendations for Modeling Long Range Transport Impacts*[9] for parameter settings and meteorological data inputs. You may use other settings from those in IWAQM, but you should identify these settings and explain your selection of these settings.

One important element of the protocol is in establishing the receptors that will be used in the model. The receptors that you use should be located in the nearest Class I area with sufficient density to identify the likely visibility effects of the source. For other Class I areas in relatively close proximity to a BART-eligible source, you may model a few strategic receptors to determine whether effects at those areas may be greater than at the nearest Class I area. For example, you might chose to locate receptors at these areas at the closest point to the source, at the highest and lowest elevation in the Class I area, at the IMPROVE monitor, and at the approximate expected plume release height. If the highest modeled effects are observed at the nearest Class I area, you may choose not to analyze the other Class I areas any further as additional analyses might be unwarranted.

[7] The model code and its documentation are available at no cost for download from *http://www.epa.gov/scram001/tt22.htm#calpuff*.

[8] The Guideline on Air Quality Models, 40 CFR part 51, appendix W, addresses the regulatory application of air quality models for assessing criteria pollutants under the CAA, and describes further the procedures for using the CALPUFF model, as well as for obtaining approval for the use of other, nonguideline models.

[9] *Interagency Workgroup on Air Quality Modeling (IWAQM) Phase 2 Summary Report and Recommendations for Modeling Long Range Transport Impacts*, U.S. Environmental Protection Agency, EPA–454/R–98–019, December 1998.

You should bear in mind that some receptors within the relevant Class I area may be less than 50 km from the source while other receptors within that same Class I area may be greater than 50 km from the same source. As indicated by the Guideline on Air Quality Models, 40 CFR part 51, appendix W, this situation may call for the use of two different modeling approaches for the same Class I area and source, depending upon the State's chosen method for modeling sources less than 50 km. In situations where you are assessing visibility impacts for source-receptor distances less than 50 km, you should use expert modeling judgment in determining visibility impacts, giving consideration to both CALPUFF and other appropriate methods.

In developing your modeling protocol, you may want to consult with EPA and your regional planning organization (RPO). Up-front consultation will ensure that key technical issues are addressed before you conduct your modeling.

2. *With the accepted protocol and compare the predicted visibility impacts with your threshold for ''contribution.''* You should calculate daily visibility values for each receptor as the change in deciviews compared against natural visibility conditions. You can use EPA's ''Guidance for Estimating Natural Visibility Conditions Under the Regional Haze Rule,'' EPA–454/B–03–005 (September 2003) in making this calculation. To determine whether a source may reasonably be anticipated to cause or contribute to visibility impairment at Class I area, you then compare the impacts predicted by the model against the threshold that you have selected.

The emissions estimates used in the models are intended to reflect steady-state operating conditions during periods of high capacity utilization. We do not generally recommend that emissions reflecting periods of start-up, shutdown, and malfunction be used, as such emission rates could produce higher than normal effects than would be typical of most facilities. We recommend that States use the 24 hour average actual emission rate from the highest emitting day of the meteorological period modeled, unless this rate reflects periods start-up, shutdown, or malfunction. In addition, the monthly average relative humidity is used, rather than the daily average humidity—an approach that effectively lowers the peak values in daily model averages.

For these reasons, if you use the modeling approach we recommend, you should compare your ''contribution'' threshold against the 98th percentile of values. If the 98th percentile value from your modeling is less than your contribution threshold, then you may conclude that the source does not contribute to visibility impairment and is not subject to BART.

Option 2: Use of Model Plants To Exempt Individual Sources With Common Characteristics

Under this option, analyses of model plants could be used to exempt certain BART-eligible sources that share specific characteristics. It may be most useful to use this type of analysis to identify the types of small sources that do not cause or contribute to visibility impairment for purposes of BART, and thus should not be subject to a BART review. Different Class I areas may have different characteristics, however, so you should use care to ensure that the criteria you develop are appropriate for the applicable cases.

In carrying out this approach, you could use modeling analyses of representative plants to reflect groupings of specific sources with important common characteristics. Based on these analyses, you may find that certain types of sources are clearly anticipated to cause or contribute to visibility impairment. You could then choose to categorically require those types of sources to undergo a BART determination. Conversely, you may find based on representative plant analyses that certain types of sources are not reasonably anticipated to cause or contribute to visibility impairment. To do this, you may conduct your own modeling to establish emission levels and distances from Class I areas on which you can rely to exempt sources with those characteristics. For example, based on your modeling you might choose to exempt all NO_X-only sources that emit less than a certain amount per year and are located a certain distance from a Class I area. You could then choose to categorically exempt such sources from the BART determination process.

Our analyses of visibility impacts from model plants provide a useful example of the type of analyses that can be used to exempt categories of sources from BART.[10] In our analyses, we developed model plants (EGUs and non-EGUs), with representative plume and stack characteristics, for use in considering the visibility impact from emission sources of different sizes and compositions at distances of 50, 100 and 200 kilometers from two hypothetical Class I areas (one in the East and one in the West). As the plume and stack characteristics of these model plants were developed considering the broad range of sources within the EGU and non-EGU categories, they do not necessarily represent any specific plant. However, the results of these analyses are instructive in the development of an exemption process for any Class I area.

[10] CALPUFF Analysis in Support of the June 2005 Changes to the Regional Haze Rule, U.S. Environmental Protection Agency, June 15, 2005, Docket No. OAR–2002–0076.

In preparing our analyses, we have made a number of assumptions and exercised certain modeling choices; some of these have a tendency to lend conservatism to the results, overstating the likely effects, while others may understate the likely effects. On balance, when all of these factors are considered, we believe that our examples reflect realistic treatments of the situations being modeled. Based on our analyses, we believe that a State that has established 0.5 deciviews as a contribution threshold could reasonably exempt from the BART review process sources that emit less than 500 tons per year of NO_X or SO_2 (or combined NO_X and SO_2), as long as these sources are located more than 50 kilometers from any Class I area; and sources that emit less than 1000 tons per year of NO_X or SO_2 (or combined NO_X and SO_2) that are located more than 100 kilometers from any Class I area. You do, however, have the option of showing other thresholds might also be appropriate given your specific circumstances.

Option 3: Cumulative Modeling To Show That No Sources in a State Are Subject to BART

You may also submit to EPA a demonstration based on an analysis of overall visibility impacts that emissions from BART-eligible sources in your State, considered together, are not reasonably anticipated to cause or contribute to any visibility impairment in a Class I area, and thus no source should be subject to BART. You may do this on a pollutant by pollutant basis or for all visibility-impairing pollutants to determine if emissions from these sources contribute to visibility impairment.

For example, emissions of SO_2 from your BART-eligible sources may clearly cause or contribute to visibility impairment while direct emissions of $PM_{2.5}$ from these sources may not contribute to impairment. If you can make such a demonstration, then you may reasonably conclude that none of your BART-eligible sources are subject to BART for a particular pollutant or pollutants. As noted above, your demonstration should take into account the interactions among pollutants and their resulting impacts on visibility before making any pollutant-specific determinations.

Analyses may be conducted using several alternative modeling approaches. First, you may use the CALPUFF or other appropriate model as described in Option 1 to evaluate the impacts of individual sources on downwind Class I areas, aggregating those impacts to determine the collective contribution of all BART-eligible sources to visibility impairment. You may also use a photochemical grid model. As a general matter, the larger the number of sources being modeled, the more appropriate it may be to use a photochemical grid model. However, because such models are significantly less sensitive than dispersion models to the contributions of one or a few sources, as well as to the interactions among sources that are widely distributed geographically, if you wish to use a grid model, you should consult with the appropriate EPA Regional Office to develop an appropriate modeling protocol.

IV. The BART Determination: Analysis of BART Options

This section describes the process for the analysis of control options for sources subject to BART.

A. What factors must I address in the BART review?

The visibility regulations define BART as follows:

Best Available Retrofit Technology (BART) means an emission limitation based on the degree of reduction achievable through the application of the best system of continuous emission reduction for each pollutant which is emitted by . . . [a BART-eligible source]. The emission limitation must be established, on a case-by-case basis, taking into consideration the technology available, the costs of compliance, the energy and non-air quality environmental impacts of compliance, any pollution control equipment in use or in existence at the source, the remaining useful life of the source, and the degree of improvement in visibility which may reasonably be anticipated to result from the use of such technology.

The BART analysis identifies the best system of continuous emission reduction taking into account:

(1) The available retrofit control options,

(2) Any pollution control equipment in use at the source (which affects the availability of options and their impacts),

(3) The costs of compliance with control options,

(4) The remaining useful life of the facility,

(5) The energy and non-air quality environmental impacts of control options

(6) The visibility impacts analysis.

B. What is the scope of the BART review?

Once you determine that a source is subject to BART for a particular pollutant, then for each affected emission unit, you must establish BART for that pollutant. The BART determination must address air pollution control measures for each emissions unit or pollutant emitting activity subject to review.

Example: Plantwide emissions from emission units within the listed categories that began operation within the ''time window''

for BART[11] are 300 tons/yr of NO_X, 200 tons/yr of SO_2, and 150 tons/yr of primary particulate. Emissions unit A emits 200 tons/yr of NO_X, 100 tons/yr of SO_2, and 100 tons/yr of primary particulate. Other emission units, units B through H, which began operating in 1966, contribute lesser amounts of each pollutant. For this example, a BART review is required for NO_X, SO_2, and primary particulate, and control options must be analyzed for units B through H as well as unit A.

C. How does a BART review relate to Maximum Achievable Control Technology (MACT) Standards under CAA section 112, or to other emission limitations required under the CAA?

For VOC and PM sources subject to MACT standards, States may streamline the analysis by including a discussion of the MACT controls and whether any major new technologies have been developed subsequent to the MACT standards. We believe that there are many VOC and PM sources that are well controlled because they are regulated by the MACT standards, which EPA developed under CAA section 112. For a few MACT standards, this may also be true for SO_2. Any source subject to MACT standards must meet a level that is as stringent as the best-controlled 12 percent of sources in the industry. Examples of these hazardous air pollutant sources which effectively control VOC and PM emissions include (among others) secondary lead facilities, organic chemical plants subject to the hazardous organic NESHAP (HON), pharmaceutical production facilities, and equipment leaks and wastewater operations at petroleum refineries. We believe that, in many cases, it will be unlikely that States will identify emission controls more stringent than the MACT standards without identifying control options that would cost many thousands of dollars per ton. Unless there are new technologies subsequent to the MACT standards which would lead to cost-effective increases in the level of control, you may rely on the MACT standards for purposes of BART.

We believe that the same rationale also holds true for emissions standards developed for municipal waste incinerators under CAA section 111(d), and for many NSR/PSD determinations and NSR/PSD settlement agreements. However, we do not believe that technology determinations from the 1970s or early 1980s, including new source performance standards (NSPS), should be considered to represent best control for existing sources, as best control levels for recent plant retrofits are more stringent than these older levels.

Where you are relying on these standards to represent a BART level of control, you should provide the public with a discussion of whether any new technologies have subsequently become available.

D. What Are the Five Basic Steps of a Case-by-Case BART Analysis?

The five steps are:

STEP 1—Identify All[12] Available Retrofit Control Technologies,

STEP 2—Eliminate Technically Infeasible Options,

STEP 3—Evaluate Control Effectiveness of Remaining Control Technologies,

STEP 4—Evaluate Impacts and Document the Results, and

STEP 5—Evaluate Visibility Impacts.

1. STEP 1: How do I identify all available retrofit emission control techniques?

1. Available retrofit control options are those air pollution control technologies with a practical potential for application to the emissions unit and the regulated pollutant under evaluation. Air pollution control technologies can include a wide variety of available methods, systems, and techniques for control of the affected pollutant. Technologies required as BACT or LAER are available for BART purposes and must be included as control alternatives. The control alternatives can include not only existing controls for the source category in question but also take into account technology transfer of controls that have been applied to similar source categories and gas streams. Technologies which have not yet been applied to (or permitted for) full scale operations need not be considered as available; we do not expect the source owner to purchase or construct a process or control device that has not already been demonstrated in practice.

2. Where a NSPS exists for a source category (which is the case for most of the categories affected by BART), you should include a level of control equivalent to the NSPS as one of the control options.[13] The

[11] That is, emission units that were in existence on August 7, 1977 and which began actual operation on or after August 7, 1962.

[12] In identifying ''all'' options, you must identify the most stringent option and a reasonable set of options for analysis that reflects a comprehensive list of available technologies. It is not necessary to list all permutations of available control levels that exist for a given technology—the list is complete if it includes the maximum level of control each technology is capable of achieving.

[13] In EPA's 1980 BART guidelines for reasonably attributable visibility impairment, we concluded that NSPS standards generally, at that time, represented the best level sources could install as BART. In the 20

Continued

NSPS standards are codified in 40 CFR part 60. We note that there are situations where NSPS standards do not require the most stringent level of available control for all sources within a category. For example, post-combustion NO_X controls (the most stringent controls for stationary gas turbines) are not required under subpart GG of the NSPS for Stationary Gas Turbines. However, such controls must still be considered available technologies for the BART selection process.

3. Potentially applicable retrofit control alternatives can be categorized in three ways.

• Pollution prevention: use of inherently lower-emitting processes/practices, including the use of control techniques (e.g., low-NO_X burners) and work practices that prevent emissions and result in lower ''production-specific'' emissions (note that it is not our intent to direct States to switch fuel forms, e.g., from coal to gas),

• Use of (and where already in place, improvement in the performance of) add-on controls, such as scrubbers, fabric filters, thermal oxidizers and other devices that control and reduce emissions after they are produced, and

• Combinations of inherently lower-emitting processes and add-on controls.

4. In the course of the BART review, one or more of the available control options may be eliminated from consideration because they are demonstrated to be technically infeasible or to have unacceptable energy, cost, or non-air quality environmental impacts on a case-by-case (or site-specific) basis. However, at the outset, you should initially identify all control options with potential application to the emissions unit under review.

5. We do not consider BART as a requirement to redesign the source when considering available control alternatives. For example, where the source subject to BART is a coal-fired electric generator, we do not require the BART analysis to consider building a natural gas-fired electric turbine although the turbine may be inherently less polluting on a per unit basis.

6. For emission units subject to a BART review, there will often be control measures or devices already in place. For such emission units, it is important to include control options that involve improvements to existing controls and not to limit the control options only to those measures that involve a complete replacement of control devices.

Example: For a power plant with an existing wet scrubber, the current control efficiency is 66 percent. Part of the reason for the relatively low control efficiency is that 22 percent of the gas stream bypasses the scrubber. A BART review identifies options for improving the performance of the wet scrubber by redesigning the internal components of the scrubber and by eliminating or reducing the percentage of the gas stream that bypasses the scrubber. Four control options are identified: (1) 78 percent control based upon improved scrubber performance while maintaining the 22 percent bypass, (2) 83 percent control based upon improved scrubber performance while reducing the bypass to 15 percent, (3) 93 percent control based upon improving the scrubber performance while eliminating the bypass entirely, (this option results in a ''wet stack'' operation in which the gas leaving the stack is saturated with water) and (4) 93 percent as in option 3, with the addition of an indirect reheat system to reheat the stack gas above the saturation temperature. You must consider each of these four options in a BART analysis for this source.

7. You are expected to identify potentially applicable retrofit control technologies that represent the full range of demonstrated alternatives. Examples of general information sources to consider include:

• The EPA's Clean Air Technology Center, which includes the RACT/BACT/LAER Clearinghouse (RBLC);

• State and Local Best Available Control Technology Guidelines—many agencies have online information—for example South Coast Air Quality Management District, Bay Area Air Quality Management District, and Texas Natural Resources Conservation Commission;

• Control technology vendors;

• Federal/State/Local NSR permits and associated inspection/performance test reports;

• Environmental consultants;

• Technical journals, reports and newsletters, air pollution control seminars; and

• The EPA's NSR bulletin board—*http://www.epa.gov/ttn/nsr;*

• Department of Energy's Clean Coal Program—technical reports;

• The NO_X Control Technology ''Cost Tool''—Clean Air Markets Division Web page—*http://www.epa.gov/airmarkets/arp/nox/controltech.html;*

• Performance of selective catalytic reduction on coal-fired steam generating units—

---

year period since this guidance was developed, there have been advances in SO_2 control technologies as well as technologies for the control of other pollutants, confirmed by a number of recent retrofits at Western power plants. Accordingly, EPA no longer concludes that the NSPS level of controls automatically represents ''the best these sources can install.'' Analysis of the BART factors could result in the selection of a NSPS level of control, but you should reach this conclusion only after considering the full range of control options.

final report. OAR/ARD, June 1997 (also available at *http://www.epa.gov/airmarkets/arp/nox/controltech.html*);

• Cost estimates for selected applications of NO_X control technologies on stationary combustion boilers. OAR/ARD June 1997. (Docket for NO_X SIP Call, A–96–56, item II–A–03);

• Investigation of performance and cost of NO_X controls as applied to group 2 boilers. OAR/ARD, August 1996. (Docket for Phase II NO_X rule, A–95–28, item IV–A–4);

• Controlling SO_2 Emissions: A Review of Technologies. EPA–600/R–00–093, USEPA/ORD/NRMRL, October 2000; and

• The OAQPS Control Cost Manual.

You are expected to compile appropriate information from these information sources.

8. There may be situations where a specific set of units within a fenceline constitutes the logical set to which controls would apply and that set of units may or may not all be BART-eligible. (For example, some units in that set may not have been constructed between 1962 and 1977.)

9. If you find that a BART source has controls already in place which are the most stringent controls available (note that this means that all possible improvements to any control devices have been made), then it is not necessary to comprehensively complete each following step of the BART analysis in this section. As long these most stringent controls available are made federally enforceable for the purpose of implementing BART for that source, you may skip the remaining analyses in this section, including the visibility analysis in step 5. Likewise, if a source commits to a BART determination that consists of the most stringent controls available, then there is no need to complete the remaining analyses in this section.

2. STEP 2: How do I determine whether the options identified in Step 1 are technically feasible?

In Step 2, you evaluate the technical feasibility of the control options you identified in Step 1. You should document a demonstration of technical infeasibility and should explain, based on physical, chemical, or engineering principles, why technical difficulties would preclude the successful use of the control option on the emissions unit under review. You may then eliminate such technically infeasible control options from further consideration in the BART analysis.

In general, what do we mean by technical feasibility?

Control technologies are technically feasible if either (1) they have been installed and operated successfully for the type of source under review under similar conditions, or (2) the technology could be applied to the source under review. Two key concepts are important in determining whether a technology could be applied: ''availability'' and ''applicability.'' As explained in more detail below, a technology is considered ''available'' if the source owner may obtain it through commercial channels, or it is otherwise available within the common sense meaning of the term. An available technology is ''applicable'' if it can reasonably be installed and operated on the source type under consideration. A technology that is available and applicable is technically feasible.

What do we mean by ''available'' technology?

1. The typical stages for bringing a control technology concept to reality as a commercial product are:

• Concept stage;
• Research and patenting;
• Bench scale or laboratory testing;
• Pilot scale testing;
• Licensing and commercial demonstration; and
• Commercial sales.

2. A control technique is considered available, within the context presented above, if it has reached the stage of licensing and commercial availability. Similarly, we do not expect a source owner to conduct extended trials to learn how to apply a technology on a totally new and dissimilar source type. Consequently, you would not consider technologies in the pilot scale testing stages of development as ''available'' for purposes of BART review.

3. Commercial availability by itself, however, is not necessarily a sufficient basis for concluding a technology to be applicable and therefore technically feasible. Technical feasibility, as determined in Step 2, also means a control option may reasonably be deployed on or ''applicable'' to the source type under consideration.

Because a new technology may become available at various points in time during the BART analysis process, we believe that guidelines are needed on when a technology must be considered. For example, a technology may become available during the public comment period on the State's rule development process. Likewise, it is possible that new technologies may become available after the close of the State's public comment period and before submittal of the SIP to EPA, or during EPA's review process on the SIP submittal. In order to provide certainty in the process, all technologies should be considered if available before the close of the State's public comment period. You need not consider technologies that become available after this date. As part of your analysis, you should consider any technologies brought to your attention in public comments. If you disagree with public comments asserting that the technology is available, you should

provide an explanation for the public record as to the basis for your conclusion.

What do we mean by ''applicable'' technology?

You need to exercise technical judgment in determining whether a control alternative is applicable to the source type under consideration. In general, a commercially available control option will be presumed applicable if it has been used on the same or a similar source type. Absent a showing of this type, you evaluate technical feasibility by examining the physical and chemical characteristics of the pollutant-bearing gas stream, and comparing them to the gas stream characteristics of the source types to which the technology had been applied previously. Deployment of the control technology on a new or existing source with similar gas stream characteristics is generally a sufficient basis for concluding the technology is technically feasible barring a demonstration to the contrary as described below.

What type of demonstration is required if I conclude that an option is not technically feasible?

1. Where you conclude that a control option identified in Step 1 is technically infeasible, you should demonstrate that the option is either commercially unavailable, or that specific circumstances preclude its application to a particular emission unit. Generally, such a demonstration involves an evaluation of the characteristics of the pollutant-bearing gas stream and the capabilities of the technology. Alternatively, a demonstration of technical infeasibility may involve a showing that there are unresolvable technical difficulties with applying the control to the source (e.g., size of the unit, location of the proposed site, operating problems related to specific circumstances of the source, space constraints, reliability, and adverse side effects on the rest of the facility). Where the resolution of technical difficulties is merely a matter of increased cost, you should consider the technology to be technically feasible. The cost of a control alternative is considered later in the process.

2. The determination of technical feasibility is sometimes influenced by recent air quality permits. In some cases, an air quality permit may require a certain level of control, but the level of control in a permit is not expected to be achieved in practice (e.g., a source has received a permit but the project was canceled, or every operating source at that permitted level has been physically unable to achieve compliance with the limit). Where this is the case, you should provide supporting documentation showing why such limits are not technically feasible, and, therefore, why the level of control (but not necessarily the technology) may be eliminated from further consideration. However, if there is a permit requiring the application of a certain technology or emission limit to be achieved for such technology, this usually is sufficient justification for you to assume the technical feasibility of that technology or emission limit.

3. Physical modifications needed to resolve technical obstacles do not, in and of themselves, provide a justification for eliminating the control technique on the basis of technical infeasibility. However, you may consider the cost of such modifications in estimating costs. This, in turn, may form the basis for eliminating a control technology (see later discussion).

4. Vendor guarantees may provide an indication of commercial availability and the technical feasibility of a control technique and could contribute to a determination of technical feasibility or technical infeasibility, depending on circumstances. However, we do not consider a vendor guarantee alone to be sufficient justification that a control option will work. Conversely, lack of a vendor guarantee by itself does not present sufficient justification that a control option or an emissions limit is technically infeasible. Generally, you should make decisions about technical feasibility based on chemical, and engineering analyses (as discussed above), in conjunction with information about vendor guarantees.

5. A possible outcome of the BART procedures discussed in these guidelines is the evaluation of multiple control technology alternatives which result in essentially equivalent emissions. It is not our intent to encourage evaluation of unnecessarily large numbers of control alternatives for every emissions unit. Consequently, you should use judgment in deciding on those alternatives for which you will conduct the detailed impacts analysis (Step 4 below). For example, if two or more control techniques result in control levels that are essentially identical, considering the uncertainties of emissions factors and other parameters pertinent to estimating performance, you may evaluate only the less costly of these options. You should narrow the scope of the BART analysis in this way only if there is a negligible difference in emissions and energy and non-air quality environmental impacts between control alternatives.

3. STEP 3: How do I evaluate technically feasible alternatives?

Step 3 involves evaluating the control effectiveness of all the technically feasible control alternatives identified in Step 2 for the pollutant and emissions unit under review.

Two key issues in this process include:

(1) Making sure that you express the degree of control using a metric that ensures

an ''apples to apples'' comparison of emissions performance levels among options, and

(2) Giving appropriate treatment and consideration of control techniques that can operate over a wide range of emission performance levels.

What are the appropriate metrics for comparison?

This issue is especially important when you compare inherently lower-polluting processes to one another or to add-on controls. In such cases, it is generally most effective to express emissions performance as an average steady state emissions level per unit of product produced or processed.

Examples of common metrics:

• Pounds of SO_2 emissions per million Btu heat input, and

• Pounds of NO_X emissions per ton of cement produced.

How do I evaluate control techniques with a wide range of emission performance levels?

1. Many control techniques, including both add-on controls and inherently lower polluting processes, can perform at a wide range of levels. Scrubbers and high and low efficiency electrostatic precipitators (ESPs) are two of the many examples of such control techniques that can perform at a wide range of levels. It is not our intent to require analysis of each possible level of efficiency for a control technique as such an analysis would result in a large number of options. It is important, however, that in analyzing the technology you take into account the most stringent emission control level that the technology is capable of achieving. You should consider recent regulatory decisions and performance data (e.g., manufacturer's data, engineering estimates and the experience of other sources) when identifying an emissions performance level or levels to evaluate.

2. In assessing the capability of the control alternative, latitude exists to consider special circumstances pertinent to the specific source under review, or regarding the prior application of the control alternative. However, you should explain the basis for choosing the alternate level (or range) of control in the BART analysis. Without a showing of differences between the source and other sources that have achieved more stringent emissions limits, you should conclude that the level being achieved by those other sources is representative of the achievable level for the source being analyzed.

3. You may encounter cases where you may wish to evaluate other levels of control in addition to the most stringent level for a given device. While you must consider the most stringent level as one of the control options, you may consider less stringent levels of control as additional options. This would be useful, particularly in cases where the selection of additional options would have widely varying costs and other impacts.

4. Finally, we note that for retrofitting existing sources in addressing BART, you should consider ways to improve the performance of existing control devices, particularly when a control device is not achieving the level of control that other similar sources are achieving in practice with the same device. For example, you should consider requiring those sources with electrostatic precipitators (ESPs) performing below currently achievable levels to improve their performance.

4. STEP 4: For a BART review, what impacts am I expected to calculate and report? What methods does EPA recommend for the impacts analysis?

After you identify the available and technically feasible control technology options, you are expected to conduct the following analyses when you make a BART determination:

Impact analysis part 1: Costs of compliance,

Impact analysis part 2: Energy impacts, and

Impact analysis part 3: Non-air quality environmental impacts.

Impact analysis part 4: Remaining useful life.

In this section, we describe how to conduct each of these three analyses. You are responsible for presenting an evaluation of each impact along with appropriate supporting information. You should discuss and, where possible, quantify both beneficial and adverse impacts. In general, the analysis should focus on the direct impact of the control alternative.

a. Impact analysis part 1: how do I estimate the costs of control?

1. To conduct a cost analysis, you:

(1) Identify the emissions units being controlled,

(2) Identify design parameters for emission controls, and

(3) Develop cost estimates based upon those design parameters.

2. It is important to identify clearly the emission units being controlled, that is, to specify a well-defined area or process segment within the plant. In some cases, multiple emission units can be controlled jointly. However, in other cases, it may be appropriate in the cost analysis to consider whether multiple units will be required to install separate and/or different control devices. The analysis should provide a clear summary list of equipment and the associated control costs. Inadequate documentation of the equipment whose emissions are being controlled is a potential cause for confusion in

comparison of costs of the same controls applied to similar sources.

3. You then specify the control system design parameters. Potential sources of these design parameters include equipment vendors, background information documents used to support NSPS development, control technique guidelines documents, cost manuals developed by EPA, control data in trade publications, and engineering and performance test data. The following are a few examples of design parameters for two example control measures:

Control device	Examples of design parameters
Wet Scrubbers	Type of sorbent used (lime, limestone, etc.). Gas pressure drop. Liquid/gas ratio.
Selective Catalytic Reduction.	Ammonia to NO_X molar ratio. Pressure drop. Catalyst life.

4. The value selected for the design parameter should ensure that the control option will achieve the level of emission control being evaluated. You should include in your analysis documentation of your assumptions regarding design parameters. Examples of supporting references would include the EPA OAQPS *Control Cost Manual* (see below) and background information documents used for NSPS and hazardous pollutant emission standards. If the design parameters you specified differ from typical designs, you should document the difference by supplying performance test data for the control technology in question applied to the same source or a similar source.

5. Once the control technology alternatives and achievable emissions performance levels have been identified, you then develop estimates of capital and annual costs. The basis for equipment cost estimates also should be documented, either with data supplied by an equipment vendor (*i.e.*, budget estimates or bids) or by a referenced source (such as the *OAQPS Control Cost Manual*, Fifth Edition, February 1996, EPA 453/B–96–001).[14] In order to maintain and improve consistency, cost estimates should be based on the *OAQPS Control Cost Manual*, where possible.[15] The *Control Cost Manual* addresses most control technologies in sufficient detail for a BART analysis. The cost analysis should also take into account any site-specific design or other conditions identified above that affect the cost of a particular BART technology option.

b. What do we mean by cost effectiveness?

Cost effectiveness, in general, is a criterion used to assess the potential for achieving an objective in the most economical way. For purposes of air pollutant analysis, ''effectiveness'' is measured in terms of tons of pollutant emissions removed, and ''cost'' is measured in terms of annualized control costs. We recommend two types of cost-effectiveness calculations—average cost effectiveness, and incremental cost effectiveness.

c. How do I calculate average cost effectiveness?

Average cost effectiveness means the total annualized costs of control divided by annual emissions reductions (the difference between baseline annual emissions and the estimate of emissions after controls), using the following formula:

Average cost effectiveness (dollars per ton removed) =*Control option annualized cost*[16]

Baseline annual emissions—Annual emissions with Control option

Because you calculate costs in (annualized) dollars per year ($/yr) and because you calculate emissions rates in tons per year (tons/yr), the result is an average cost-effectiveness number in (annualized) dollars per ton ($/ton) of pollutant removed.

d. How do I calculate baseline emissions?

1. The baseline emissions rate should represent a realistic depiction of anticipated annual emissions for the source. In general, for the existing sources subject to BART, you will estimate the anticipated annual emissions based upon actual emissions from a baseline period.

2. When you project that future operating parameters (e.g., limited hours of operation or capacity utilization, type of fuel, raw materials or product mix or type) will differ from past practice, and if this projection has a deciding effect in the BART determination,

[14] The *OAQPS Control Cost Manual* is updated periodically. While this citation refers to the latest version at the time this guidance was written, you should use the version that is current as of when you conduct your impact analysis. This document is available at the following Web site: *http://www.epa.gov/ttn/catc/dir1/cs1ch2.pdf*.

[15] You should include documentation for any additional information you used for the cost calculations, including any information supplied by vendors that affects your assumptions regarding purchased equipment costs, equipment life, replacement of major components, and any other element of the calculation that differs from the *Control Cost Manual*.

[16] Whenever you calculate or report annual costs, you should indicate the year for which the costs are estimated. For example, if you use the year 2000 as the basis for cost comparisons, you would report that an annualized cost of $20 million would be: $20 million (year 2000 dollars).

then you must make these parameters or assumptions into enforceable limitations. In the absence of enforceable limitations, you calculate baseline emissions based upon continuation of past practice.

3. For example, the baseline emissions calculation for an emergency standby generator may consider the fact that the source owner would not operate more than past practice of 2 weeks a year. On the other hand, baseline emissions associated with a base-loaded turbine should be based on its past practice which would indicate a large number of hours of operation. This produces a significantly higher level of baseline emissions than in the case of the emergency/standby unit and results in more cost-effective controls. As a consequence of the dissimilar baseline emissions, BART for the two cases could be very different.

e. How do I calculate incremental cost effectiveness?

1. In addition to the average cost effectiveness of a control option, you should also calculate incremental cost effectiveness. You should consider the incremental cost effectiveness in combination with the average cost effectiveness when considering whether to eliminate a control option. The incremental cost effectiveness calculation compares the costs and performance level of a control option to those of the next most stringent option, as shown in the following formula (with respect to cost per emissions reduction):

Incremental Cost Effectiveness (dollars per incremental ton removed) = (Total annualized costs of control option) − (Total annualized costs of next control option) ÷ (Control option annual emissions) − (Next control option annual emissions)

Example 1: Assume that Option F on Figure 2 has total annualized costs of $1 million to reduce 2000 tons of a pollutant, and that Option D on Figure 2 has total annualized costs of $500,000 to reduce 1000 tons of the same pollutant. The incremental cost effectiveness of Option F relative to Option D is ($1 million − $500,000) divided by (2000 tons − 1000 tons), or $500,000 divided by 1000 tons, which is $500/ton.

Example 2: Assume that two control options exist: Option 1 and Option 2. Option 1 achieves a 1,000 ton/yr reduction at an annualized cost of $1,900,000. This represents an average cost of ($1,900,000/1,000 tons) = $1,900/ton. Option 2 achieves a 980 tons/yr reduction at an annualized cost of $1,500,000. This represents an average cost of ($1,500,000/980 tons) = $1,531/ton. The incremental cost effectiveness of Option 1 relative to Option 2 is ($1,900,000 − $1,500,000) divided by (1,000 tons − 980 tons). The adoption of Option 1 instead of Option 2 results in an incremental emission reduction of 20 tons per year at an additional cost of $400,000 per year. The incremental cost of Option 1, then, is $20,000 per ton − 11 times the average cost of $1,900 per ton. While $1,900 per ton may still be deemed reasonable, it is useful to consider both the average and incremental cost in making an overall cost-effectiveness finding. Of course, there may be other differences between these options, such as, energy or water use, or non-air environmental effects, which also should be considered in selecting a BART technology.

2. You should exercise care in deriving incremental costs of candidate control options. Incremental cost-effectiveness comparisons should focus on annualized cost and emission reduction differences between ''dominant'' alternatives. To identify dominant alternatives, you generate a graphical plot of total annualized costs for total emissions reductions for all control alternatives identified in the BART analysis, and by identifying a ''least-cost envelope'' as shown in Figure 2. (A ''least-cost envelope'' represents the set of options that should be dominant in the choice of a specific option.)

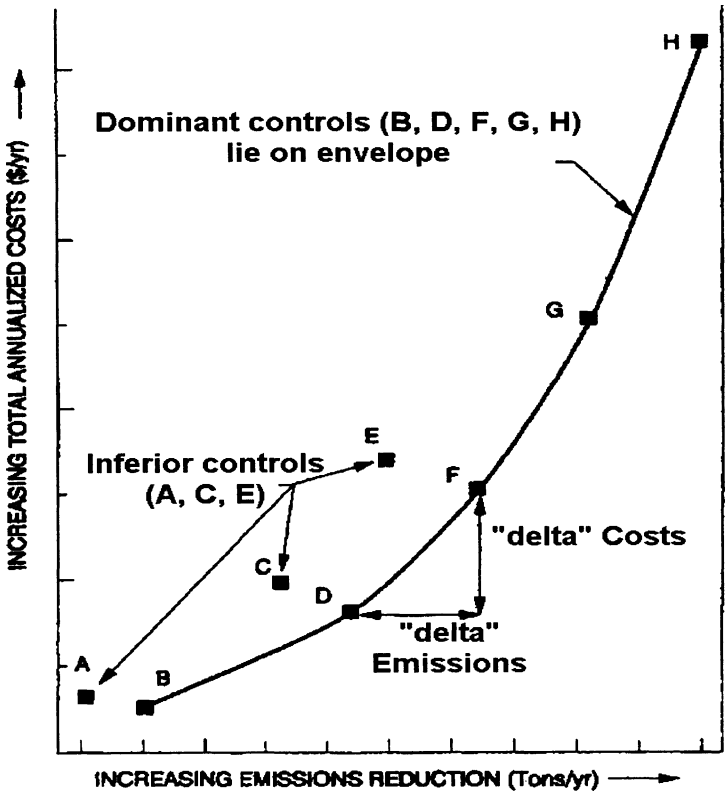

Example: Eight technically feasible control options for analysis are listed. These are represented as A through H in Figure 2. The dominant set of control options, B, D, F, G, and H, represent the least-cost envelope, as we depict by the cost curve connecting them. Points A, C and E are inferior options, and you should not use them in calculating incremental cost effectiveness. Points A, C and E represent inferior controls because B will buy more emissions reductions for less money than A; and similarly, D and F will buy more reductions for less money than C and E, respectively.

3. In calculating incremental costs, you:

(1) Array the control options in ascending order of annualized total costs,

(2) Develop a graph of the most reasonable smooth curve of the control options, as shown in Figure 2. This is to show the ''least-cost envelope'' discussed above; and

(3) Calculate the incremental cost effectiveness for each dominant option, which is the difference in total annual costs between that option and the next most stringent option, divided by the difference in emissions, after controls have been applied, between those two control options. For example, using Figure 2, you would calculate incremental cost effectiveness for the difference between options B and D, options D and F, options F and G, and options G and H.

4. A comparison of incremental costs can also be useful in evaluating the viability of a specific control option over a range of efficiencies. For example, depending on the capital and operational cost of a control device, total and incremental cost may vary significantly (either increasing or decreasing) over the operational range of a control device. Also, the greater the number of possible control options that exist, the more weight should be given to the incremental costs vs. average costs. It should be noted that average and incremental cost effectiveness are identical when only one candidate control option is known to exist.

5. You should exercise caution not to misuse these techniques. For example, you may be faced with a choice between two available control devices at a source, control A and control B, where control B achieves slightly

greater emission reductions. The average cost (total annual cost/total annual emission reductions) for each may be deemed to be reasonable. However, the incremental cost (total annual $cost_{A-B}$/total annual emission $reductions_{A-B}$) of the additional emission reductions to be achieved by control B may be very great. In such an instance, it may be inappropriate to choose control B, based on its high incremental costs, even though its average cost may be considered reasonable.

6. In addition, when you evaluate the average or incremental cost effectiveness of a control alternative, you should make reasonable and supportable assumptions regarding control efficiencies. An unrealistically low assessment of the emission reduction potential of a certain technology could result in inflated cost-effectiveness figures.

f. What other information should I provide in the cost impacts analysis?

You should provide documentation of any unusual circumstances that exist for the source that would lead to cost-effectiveness estimates that would exceed that for recent retrofits. This is especially important in cases where recent retrofits have cost-effectiveness values that are within what has been considered a reasonable range, but your analysis concludes that costs for the source being analyzed are not considered reasonable. (A reasonable range would be a range that is consistent with the range of cost effectiveness values used in other similar permit decisions over a period of time.)

Example: In an arid region, large amounts of water are needed for a scrubbing system. Acquiring water from a distant location could greatly increase the cost per ton of emissions reduced of wet scrubbing as a control option.

g. What other things are important to consider in the cost impacts analysis?

In the cost analysis, you should take care not to focus on incomplete results or partial calculations. For example, large capital costs for a control option alone would not preclude selection of a control measure if large emissions reductions are projected. In such a case, low or reasonable cost effectiveness numbers may validate the option as an appropriate BART alternative irrespective of the large capital costs. Similarly, projects with relatively low capital costs may not be cost effective if there are few emissions reduced.

h. Impact analysis part 2: How should I analyze and report energy impacts?

1. You should examine the energy requirements of the control technology and determine whether the use of that technology results in energy penalties or benefits. A source owner may, for example, benefit from the combustion of a concentrated gas stream rich in volatile organic compounds; on the other hand, more often extra fuel or electricity is required to power a control device or incinerate a dilute gas stream. If such benefits or penalties exist, they should be quantified to the extent practicable. Because energy penalties or benefits can usually be quantified in terms of additional cost or income to the source, the energy impacts analysis can, in most cases, simply be factored into the cost impacts analysis. The fact of energy use in and of itself does not disqualify a technology.

2. Your energy impact analysis should consider only direct energy consumption and not indirect energy impacts. For example, you could estimate the direct energy impacts of the control alternative in units of energy consumption at the source (e.g., BTU, kWh, barrels of oil, tons of coal). The energy requirements of the control options should be shown in terms of total (and in certain cases, also incremental) energy costs per ton of pollutant removed. You can then convert these units into dollar costs and, where appropriate, factor these costs into the control cost analysis.

3. You generally do not consider indirect energy impacts (such as energy to produce raw materials for construction of control equipment). However, if you determine, either independently or based on a showing by the source owner, that the indirect energy impact is unusual or significant and that the impact can be well quantified, you may consider the indirect impact.

4. The energy impact analysis may also address concerns over the use of locally scarce fuels. The designation of a scarce fuel may vary from region to region. However, in general, a scarce fuel is one which is in short supply locally and can be better used for alternative purposes, or one which may not be reasonably available to the source either at the present time or in the near future.

5. Finally, the energy impacts analysis may consider whether there are relative differences between alternatives regarding the use of locally or regionally available coal, and whether a given alternative would result in significant economic disruption or unemployment. For example, where two options are equally cost effective and achieve equivalent or similar emissions reductions, one option may be preferred if the other alternative results in significant disruption or unemployment.

i. Impact analysis part 3: How do I analyze ''non-air quality environmental impacts?''

1. In the non-air quality related environmental impacts portion of the BART analysis, you address environmental impacts other than air quality due to emissions of the pollutant in question. Such environmental impacts include solid or hazardous

waste generation and discharges of polluted water from a control device.

2. You should identify any significant or unusual environmental impacts associated with a control alternative that have the potential to affect the selection or elimination of a control alternative. Some control technologies may have potentially significant secondary environmental impacts. Scrubber effluent, for example, may affect water quality and land use. Alternatively, water availability may affect the feasibility and costs of wet scrubbers. Other examples of secondary environmental impacts could include hazardous waste discharges, such as spent catalysts or contaminated carbon. Generally, these types of environmental concerns become important when sensitive site-specific receptors exist or when the incremental emissions reductions potential of the more stringent control is only marginally greater than the next most-effective option. However, the fact that a control device creates liquid and solid waste that must be disposed of does not necessarily argue against selection of that technology as BART, particularly if the control device has been applied to similar facilities elsewhere and the solid or liquid waste is similar to those other applications. On the other hand, where you or the source owner can show that unusual circumstances at the proposed facility create greater problems than experienced elsewhere, this may provide a basis for the elimination of that control alternative as BART.

3. The procedure for conducting an analysis of non-air quality environmental impacts should be made based on a consideration of site-specific circumstances. If you propose to adopt the most stringent alternative, then it is not necessary to perform this analysis of environmental impacts for the entire list of technologies you ranked in Step 3. In general, the analysis need only address those control alternatives with any significant or unusual environmental impacts that have the potential to affect the selection of a control alternative, or elimination of a more stringent control alternative. Thus, any important relative environmental impacts (both positive and negative) of alternatives can be compared with each other.

4. In general, the analysis of impacts starts with the identification and quantification of the solid, liquid, and gaseous discharges from the control device or devices under review. Initially, you should perform a qualitative or semi-quantitative screening to narrow the analysis to discharges with potential for causing adverse environmental effects. Next, you should assess the mass and composition of any such discharges and quantify them to the extent possible, based on readily available information. You should also assemble pertinent information about the public or environmental consequences of releasing these materials.

j. Impact analysis part 4: What are examples of non-air quality environmental impacts?

The following are examples of how to conduct non-air quality environmental impacts:

(1) *Water Impact*

You should identify the relative quantities of water used and water pollutants produced and discharged as a result of the use of each alternative emission control system. Where possible, you should assess the effect on ground water and such local surface water quality parameters as ph, turbidity, dissolved oxygen, salinity, toxic chemical levels, temperature, and any other important considerations. The analysis could consider whether applicable water quality standards will be met and the availability and effectiveness of various techniques to reduce potential adverse effects.

(2) *Solid Waste Disposal Impact*

You could also compare the quality and quantity of solid waste (e.g., sludges, solids) that must be stored and disposed of or recycled as a result of the application of each alternative emission control system. You should consider the composition and various other characteristics of the solid waste (such as permeability, water retention, rewatering of dried material, compression strength, leachability of dissolved ions, bulk density, ability to support vegetation growth and hazardous characteristics) which are significant with regard to potential surface water pollution or transport into and contamination of subsurface waters or aquifers.

(3) *Irreversible or Irretrievable Commitment of Resources*

You may consider the extent to which the alternative emission control systems may involve a trade-off between short-term environmental gains at the expense of long-term environmental losses and the extent to which the alternative systems may result in irreversible or irretrievable commitment of resources (for example, use of scarce water resources).

(4) *Other Adverse Environmental Impacts*

You may consider significant differences in noise levels, radiant heat, or dissipated static electrical energy of pollution control alternatives. Other examples of non-air quality environmental impacts would include hazardous waste discharges such as spent catalysts or contaminated carbon.

k. How do I take into account a project's ''remaining useful life'' in calculating control costs?

1. You may decide to treat the requirement to consider the source's ''remaining useful life'' of the source for BART determinations as one element of the overall cost analysis. The ''remaining useful life'' of a source, if it

represents a relatively short time period, may affect the annualized costs of retrofit controls. For example, the methods for calculating annualized costs in EPA's *OAQPS Control Cost Manual* require the use of a specified time period for amortization that varies based upon the type of control. If the remaining useful life will clearly exceed this time period, the remaining useful life has essentially no effect on control costs and on the BART determination process. Where the remaining useful life is less than the time period for amortizing costs, you should use this shorter time period in your cost calculations.

2. For purposes of these guidelines, the remaining useful life is the difference between:

(1) The date that controls will be put in place (capital and other construction costs incurred before controls are put in place can be rolled into the first year, as suggested in EPA's *OAQPS Control Cost Manual*); you are conducting the BART analysis; and

(2) The date the facility permanently stops operations. Where this affects the BART determination, this date should be assured by a federally- or State-enforceable restriction preventing further operation.

3. We recognize that there may be situations where a source operator intends to shut down a source by a given date, but wishes to retain the flexibility to continue operating beyond that date in the event, for example, that market conditions change. Where this is the case, your BART analysis may account for this, but it must maintain consistency with the statutory requirement to install BART within 5 years. Where the source chooses not to accept a federally enforceable condition requiring the source to shut down by a given date, it is necessary to determine whether a reduced time period for the remaining useful life changes the level of controls that would have been required as BART.

If the reduced time period does change the level of BART controls, you may identify, and include as part of the BART emission limitation, the more stringent level of control that would be required as BART if there were no assumption that reduced the remaining useful life. You may incorporate into the BART emission limit this more stringent level, which would serve as a contingency should the source continue operating more than 5 years after the date EPA approves the relevant SIP. The source would not be allowed to operate after the 5-year mark without such controls. If a source does operate after the 5-year mark without BART in place, the source is considered to be in violation of the BART emissions limit for each day of operation.

5. Step 5: How should I determine visibility impacts in the BART determination?

The following is an approach you may use to determine visibility impacts (the degree of visibility improvement for each source subject to BART) for the BART determination. Once you have determined that your source or sources are subject to BART, you must conduct a visibility improvement determination for the source(s) as part of the BART determination. When making this determination, we believe you have flexibility in setting absolute thresholds, target levels of improvement, or *de minimis* levels since the deciview improvement must be weighed among the five factors, and you are free to determine the weight and significance to be assigned to each factor. For example, a 0.3 deciview improvement may merit a stronger weighting in one case versus another, so one ''bright line'' may not be appropriate. [Note that if sources have elected to apply the most stringent controls available, consistent with the discussion in section E. step 1. below, you need not conduct, or require the source to conduct, an air quality modeling analysis for the purpose of determining its visibility impacts.]

Use CALPUFF,[17] or other appropriate dispersion model to determine the visibility improvement expected at a Class I area from the potential BART control technology applied to the source. Modeling should be conducted for SO_2, NO_X, and direct PM emissions ($PM_{2.5}$ and/or PM_{10}). If the source is making the visibility determination, you should review and approve or disapprove of the source's analysis before making the expected improvement determination. There are several steps for determining the visibility impacts from an individual source using a dispersion model:

- Develop a modeling protocol.

Some critical items to include in a modeling protocol are meteorological and terrain data, as well as source-specific information (stack height, temperature, exit velocity, elevation, and allowable and actual emission rates of applicable pollutants), and receptor data from appropriate Class I areas. We recommend following EPA's *Interagency Workgroup on Air Quality Modeling (IWAQM) Phase 2 Summary Report and Recommendations for Modeling Long Range Transport Impacts*[18] for parameter settings and meteorological data inputs; the use of other settings from

[17] The model code and its documentation are available at no cost for download from *http://www.epa.gov/scram001/tt22.htm#calpuff*.

[18] *Interagency Workgroup on Air Quality Modeling (IWAQM) Phase 2 Summary Report and Recommendations for Modeling Long Range Transport Impacts*, U.S. Environmental Protection Agency, EPA–454/R–98–019, December 1998.

those in IWAQM should be identified and explained in the protocol.

One important element of the protocol is in establishing the receptors that will be used in the model. The receptors that you use should be located in the nearest Class I area with sufficient density to identify the likely visibility effects of the source. For other Class I areas in relatively close proximity to a BART-eligible source, you may model a few strategic receptors to determine whether effects at those areas may be greater than at the nearest Class I area. For example, you might chose to locate receptors at these areas at the closest point to the source, at the highest and lowest elevation in the Class I area, at the IMPROVE monitor, and at the approximate expected plume release height. If the highest modeled effects are observed at the nearest Class I area, you may choose not to analyze the other Class I areas any further as additional analyses might be unwarranted.

You should bear in mind that some receptors within the relevant Class I area may be less than 50 km from the source while other receptors within that same Class I area may be greater than 50 km from the same source. As indicated by the *Guideline on Air Quality Models,* this situation may call for the use of two different modeling approaches for the same Class I area and source, depending upon the State's chosen method for modeling sources less than 50 km. In situations where you are assessing visibility impacts for source-receptor distances less than 50 km, you should use expert modeling judgment in determining visibility impacts, giving consideration to both CALPUFF and other EPA-approved methods.

In developing your modeling protocol, you may want to consult with EPA and your regional planning organization (RPO). Up-front consultation will ensure that key technical issues are addressed before you conduct your modeling.

• For each source, run the model, at pre-control and post-control emission rates according to the accepted methodology in the protocol.

Use the 24-hour average actual emission rate from the highest emitting day of the meteorological period modeled (for the pre-control scenario). Calculate the model results for each receptor as the change in deciviews compared against natural visibility conditions. Post-control emission rates are calculated as a percentage of pre-control emission rates. For example, if the 24-hr pre-control emission rate is 100 lb/hr of SO_2, then the post control rate is 5 lb/hr if the control efficiency being evaluated is 95 percent.

• Make the net visibility improvement determination.

Assess the visibility improvement based on the modeled change in visibility impacts for the pre-control and post-control emission scenarios. You have flexibility to assess visibility improvements due to BART controls by one or more methods. You may consider the frequency, magnitude, and duration components of impairment. Suggestions for making the determination are:

• Use of a comparison threshold, as is done for determining if BART-eligible sources should be subject to a BART determination. Comparison thresholds can be used in a number of ways in evaluating visibility improvement (e.g., the number of days or hours that the threshold was exceeded, a single threshold for determining whether a change in impacts is significant, or a threshold representing an x percent change in improvement).

• Compare the 98th percent days for the pre- and post-control runs.

Note that each of the modeling options may be supplemented with source apportionment data or source apportionment modeling.

E. How do I select the ''best'' alternative, using the results of Steps 1 through 5?

1. Summary of the Impacts Analysis

From the alternatives you evaluated in Step 3, we recommend you develop a chart (or charts) displaying for each of the alternatives:

(1) Expected emission rate (tons per year, pounds per hour);

(2) Emissions performance level (e.g., percent pollutant removed, emissions per unit product, lb/MMBtu, ppm);

(3) Expected emissions reductions (tons per year);

(4) Costs of compliance—total annualized costs ($), cost effectiveness ($/ton), and incremental cost effectiveness ($/ton), and/or any other cost-effectiveness measures (such as $/deciview);

(5) Energy impacts;

(6) Non-air quality environmental impacts; and

(7) Modeled visibility impacts.

2. Selecting a ''best'' alternative

1. You have discretion to determine the order in which you should evaluate control options for BART. Whatever the order in which you choose to evaluate options, you should always (1) display the options evaluated; (2) identify the average and incremental costs of each option; (3) consider the energy and non-air quality environmental impacts of each option; (4) consider the remaining useful life; and (5) consider the modeled visibility impacts. You should provide a justification for adopting the technology that you select as the ''best'' level of control, including an explanation of the CAA factors that led you to choose that option over other control levels.

2. In the case where you are conducting a BART determination for two regulated pollutants on the same source, if the result is two different BART technologies that do not work well together, you could then substitute a different technology or combination of technologies.

3. In selecting a ''best'' alternative, should I consider the affordability of controls?

1. Even if the control technology is cost effective, there may be cases where the installation of controls would affect the viability of continued plant operations.

2. There may be unusual circumstances that justify taking into consideration the conditions of the plant and the economic effects of requiring the use of a given control technology. These effects would include effects on product prices, the market share, and profitability of the source. Where there are such unusual circumstances that are judged to affect plant operations, you may take into consideration the conditions of the plant and the economic effects of requiring the use of a control technology. Where these effects are judged to have a severe impact on plant operations you may consider them in the selection process, but you may wish to provide an economic analysis that demonstrates, in sufficient detail for public review, the specific economic effects, parameters, and reasoning. (We recognize that this review process must preserve the confidentiality of sensitive business information). Any analysis may also consider whether other competing plants in the same industry have been required to install BART controls if this information is available.

4. Sulfur dioxide limits for utility boilers

You must require 750 MW power plants to meet specific control levels for SO_2 of either 95 percent control or 0.15 lbs/MMBtu, for each EGU greater than 200 MW that is currently uncontrolled unless you determine that an alternative control level is justified based on a careful consideration of the statutory factors. Thus, for example, if the source demonstrates circumstances affecting its ability to cost-effectively reduce its emissions, you should take that into account in determining whether the presumptive levels of control are appropriate for that facility. For a currently uncontrolled EGU greater than 200 MW in size, but located at a power plant smaller than 750 MW in size, such controls are generally cost-effective and could be used in your BART determination considering the five factors specified in CAA section 169A(g)(2). While these levels may represent current control capabilities, we expect that scrubber technology will continue to improve and control costs continue to decline. You should be sure to consider the level of control that is currently best achievable at the time that you are conducting your BART analysis.

For coal-fired EGUs with existing post-combustion SO_2 controls achieving less than 50 percent removal efficiencies, we recommend that you evaluate constructing a new FGD system to meet the same emission limits as above (95 percent removal or 0.15 lb/mmBtu), in addition to the evaluation of scrubber upgrades discussed below. For oil-fired units, regardless of size, you should evaluate limiting the sulfur content of the fuel oil burned to 1 percent or less by weight.

For those BART-eligible EGUs with pre-existing post-combustion SO_2 controls achieving removal efficiencies of at least 50 percent, your BART determination should consider cost effective scrubber upgrades designed to improve the system's overall SO_2 removal efficiency. There are numerous scrubber enhancements available to upgrade the average removal efficiencies of all types of existing scrubber systems. We recommend that as you evaluate the definition of ''upgrade,'' you evaluate options that not only improve the design removal efficiency of the scrubber vessel itself, but also consider upgrades that can improve the overall SO_2 removal efficiency of the scrubber system. Increasing a scrubber system's reliability, and conversely decreasing its downtime, by way of optimizing operation procedures, improving maintenance practices, adjusting scrubber chemistry, and increasing auxiliary equipment redundancy, are all ways to improve average SO_2 removal efficiencies.

We recommend that as you evaluate the performance of existing wet scrubber systems, you consider some of the following upgrades, in no particular order, as potential scrubber upgrades that have been proven in the industry as cost effective means to increase overall SO_2 removal of wet systems:

(a) Elimination of Bypass Reheat;

(b) Installation of Liquid Distribution Rings;

(c) Installation of Perforated Trays;

(d) Use of Organic Acid Additives;

(e) Improve or Upgrade Scrubber Auxiliary System Equipment;

(f) Redesign Spray Header or Nozzle Configuration.

We recommend that as you evaluate upgrade options for dry scrubber systems, you should consider the following cost effective upgrades, in no particular order:

(a) Use of Performance Additives;

(b) Use of more Reactive Sorbent;

(c) Increase the Pulverization Level of Sorbent;

(d) Engineering redesign of atomizer or slurry injection system.

You should evaluate scrubber upgrade options based on the 5 step BART analysis process.

5. Nitrogen oxide limits for utility boilers

You should establish specific numerical limits for NO_X control for each BART determination. For power plants with a generating capacity in excess of 750 MW currently using selective catalytic reduction (SCR) or selective non-catalytic reduction (SNCR) for part of the year, you should presume that use of those same controls year-round is BART. For other sources currently using SCR or SNCR to reduce NO_X emissions during part of the year, you should carefully consider requiring the use of these controls year-round as the additional costs of operating the equipment throughout the year would be relatively modest.

For coal-fired EGUs greater than 200 MW located at greater than 750 MW power plants and operating without post-combustion controls (*i.e.* SCR or SNCR), we have provided presumptive NO_X limits, differentiated by boiler design and type of coal burned. You may determine that an alternative control level is appropriate based on a careful consideration of the statutory factors. For coal-fired EGUs greater than 200 MW located at power plants 750 MW or less in size and operating without post-combustion controls, you should likewise presume that these same levels are cost-effective. You should require such utility boilers to meet the following NO_X emission limits, unless you determine that an alternative control level is justified based on consideration of the statutory factors. The following NO_X emission rates were determined based on a number of assumptions, including that the EGU boiler has enough volume to allow for installation and effective operation of separated overfire air ports. For boilers where these assumptions are incorrect, these emission limits may not be cost-effective.

TABLE 1—PRESUMPTIVE NO_X EMISSION LIMITS FOR BART-ELIGIBLE COAL-FIRED UNITS.[19]

Unit type	Coal type	NO_X presumptive limit (lb/mmbtu)[20]
Dry-bottom wall-fired	Bituminous	0.39
	Sub-bituminous	0.23
	Lignite	0.29
Tangential-fired	Bituminous	0.28
	Sub-bituminous	0.15
	Lignite	0.17
Cell Burners	Bituminous	0.40
	Sub-bituminous	0.45
Dry-turbo-fired	Bituminous	0.32
	Sub-bituminous	0.23
Wet-bottom tangential-fired	Bituminous	0.62

[19] No Cell burners, dry-turbo-fired units, nor wet-bottom tangential-fired units burning lignite were identified as BART-eligible, thus no presumptive limit was determined. Similarly, no wet-bottom tangential-fired units burning sub-bituminous were identified as BART-eligible.

[20] These limits reflect the design and technological assumptions discussed in the technical support document for NO_X limits for these guidelines. See *Technical Support Document for BART NO_X Limits for Electric Generating Units and Technical Support Document for BART NO_X* Limits for Electric Generating Units Excel Spreadsheet, Memorandum to Docket OAR 2002–0076, April 15, 2005.

Most EGUs can meet these presumptive NO_X limits through the use of current combustion control technology, *i.e.* the careful control of combustion air and low-NO_X burners. For units that cannot meet these limits using such technologies, you should consider whether advanced combustion control technologies such as rotating opposed fire air should be used to meet these limits.

Because of the relatively high NO_X emission rates of cyclone units, SCR is more cost-effective than the use of current combustion control technology for these units. The use of SCRs at cyclone units burning bituminous coal, sub-bituminous coal, and lignite should enable the units to cost-effectively meet NO_X rates of 0.10 lbs/mmbtu. As a result, we are establishing a presumptive NO_X limit of 0.10 lbs/mmbtu based on the use of SCR for coal-fired cyclone units greater than 200 MW located at 750 MW power plants. As with the other presumptive limits established in this guideline, you may determine that an alternative level of control is appropriate based on your consideration of the relevant statutory factors. For other cyclone units, you should review the use of SCR and consider whether these post-combustion controls should be required as BART.

For oil-fired and gas-fired EGUs larger than 200MW, we believe that installation of current combustion control technology to control NO_X is generally highly cost-effective and should be considered in your determination of BART for these sources. Many such units can make significant reductions in NO_X emissions which are highly cost-effective through the application of current combustion control technology.[21]

[21] See *Technical Support Document for BART NO_X Limits for Electric Generating Units* and

V. ENFORCEABLE LIMITS/COMPLIANCE DATE

To complete the BART process, you must establish enforceable emission limits that reflect the BART requirements and require compliance within a given period of time. In particular, you must establish an enforceable emission limit for each subject emission unit at the source and for each pollutant subject to review that is emitted from the source. In addition, you must require compliance with the BART emission limitations no later than 5 years after EPA approves your regional haze SIP. If technological or economic limitations in the application of a measurement methodology to a particular emission unit make a conventional emissions limit infeasible, you may instead prescribe a design, equipment, work practice, operation standard, or combination of these types of standards. You should consider allowing sources to ''average'' emissions across any set of BART-eligible emission units within a fenceline, so long as the emission reductions from each pollutant being controlled for BART would be equal to those reductions that would be obtained by simply controlling each of the BART-eligible units that constitute BART-eligible source.

You should ensure that any BART requirements are written in a way that clearly specifies the individual emission unit(s) subject to BART regulation. Because the BART requirements themselves are ''applicable'' requirements of the CAA, they must be included as title V permit conditions according to the procedures established in 40 CFR part 70 or 40 CFR part 71.

Section 302(k) of the CAA requires emissions limits such as BART to be met on a continuous basis. Although this provision does not necessarily require the use of continuous emissions monitoring (CEMs), it is important that sources employ techniques that ensure compliance on a continuous basis. Monitoring requirements generally applicable to sources, including those that are subject to BART, are governed by other regulations. See, e.g., 40 CFR part 64 (compliance assurance monitoring); 40 CFR 70.6(a)(3) (periodic monitoring); 40 CFR 70.6(c)(1) (sufficiency monitoring). Note also that while we do not believe that CEMs would necessarily be required for all BART sources, the vast majority of electric generating units potentially subject to BART already employ CEM technology for other programs, such as the acid rain program. In addition, emissions limits must be enforceable as a practical matter (contain appropriate averaging times, compliance verification procedures and recordkeeping requirements). In light of the above, the permit must:

- Be sufficient to show compliance or noncompliance (*i.e.*, through monitoring times of operation, fuel input, or other indices of operating conditions and practices); and
- Specify a reasonable averaging time consistent with established reference methods, contain reference methods for determining compliance, and provide for adequate reporting and recordkeeping so that air quality agency personnel can determine the compliance status of the source; and
- For EGUS, specify an averaging time of a 30-day rolling average, and contain a definition of ''boiler operating day'' that is consistent with the definition in the proposed revisions to the NSPS for utility boilers in 40 CFR Part 60, subpart Da.[22] You should consider a boiler operating day to be any 24-hour period between 12:00 midnight and the following midnight during which any fuel is combusted at any time at the steam generating unit. This would allow 30-day rolling average emission rates to be calculated consistently across sources.

[70 FR 39156, July 6, 2005]

Technical Support Document for BART NO_X Limits for Electric Generating Units Excel Spreadsheet, Memorandum to Docket OAR 2002–0076, April 15, 2005.

[22] 70 FR 9705, February 28, 2005.