(i) Be easily accessible after inflation for the wearer to ''top off'' each chamber by mouth;

(ii) Operate without pulling on the mechanism;

(iii) Not be able to be locked in the open or closed position; and

(iv) Have a non-toxic mouthpiece.

(4) Each manual inflation mechanism must

(i) Provide an easy means of inflation that requires only one deliberate action on the part of the wearer to actuate it;

(ii) Have a simple method for replacing its inflation medium cartridge; and

(iii) Be operated by pulling on an inflation handle that is marked ''Jerk to Inflate'' at two visible locations.

(5) Each automatic inflation mechanism must

(i) Have a simple method for replacing its inflation medium cartridge and water sensitive element;

(ii) Have an obvious method of indicating whether the mechanism has been activated; and

(iii) Be incapable of assembly without its water sensitive element.

(6) The marking required for the inflation handle of a manual inflation mechanism must be waterproof, permanent, and readable from a distance of 2.5 m (8 feet).

(c) *Deflation mechanism.* (1) Each chamber must have its own deflation mechanism.

(2) Each deflation mechanism must

(i) Be readily accessible to either hand when the lifejacket is worn while inflated;

(ii) Not require tools to operate it;

(iii) Not be able to be locked in the open or closed position; and

(iv) Have an intended method of operation which is obvious to an untrained wearer.

(3) The deflation mechanism may also be the oral inflation mechanism.

(d) *Sewn seams.* Stitching used in each structural seam of a lifejacket must provide performance equal to or better than a Class 300 Lockstitch meeting Federal Standard No. 751a.

(e) *Textiles.* All cut edges of textile materials must be treated or sewn to minimize raveling.

(f) *Body strap attachment.* Each body strap assembly must be securely attached to the lifejacket.

§ 160.176–11 Performance.

(a) *General.* Each inflatable lifejacket must be able to pass the tests in § 160.176–13 of this part.

(b) *Snag Hazard.* The lifejacket must not present a snag hazard when properly worn.

(c) *Chamber Attachment.* Each inflation chamber on or inside an inflatable lifejacket must not be able to be moved to a position that-

(1) Prevents full inflation; or

(2) Allows inflation in a location other than in its intended location.

(d) *Comfort.* The lifejacket must not cause significant discomfort to the wearer during and after inflation.

§ 160.176–13 Approval Tests.

(a) *General.* (1) This section contains requirements for approval tests and examinations of inflatable lifejackets. Each test or examination must be conducted or supervised by an independent laboratory. The tests must be done using lifejackets that have been constructed in accordance with the plans and specifications in the application for approval. Unless otherwise specified, only one lifejacket, which may or may not have been subjected to other tests, is required to be tested in each test. One or more lifejackets that have been tested as prescribed in paragraph (h) of this section must be used for the tests prescribed in paragraphs (j), (n), (q), and (r) of this section. The tests prescribed in paragraph (y) of this section require one or more lifejackets as specified in that paragraph.

(2) All data relating to buoyancy and pressure must be taken at, or corrected to, an atmospheric pressure of 760 mm (29.92 inches) of mercury and a temperature of 20 °C (68 °F).

(3) The tests in this section are not required to be run in the order listed, except where a particular order is specified.

(4) Some tests in this section require a lifejacket to be tested while being worn. In each of these tests the test subjects must represent a range of small, medium, and large heights and weights. Unless otherwise specified, a

minimum of 18 test subjects, including both males and females, must be used. The test subjects must not be practiced in the use of the lifejacket being tested. However, they must be familiar with the use of other Coast Guard approved lifejackets. Unless specified otherwise, test subjects must wear only swim suits. Each test subject must be able to swim and relax in the water.

NOTE: Some tests have inherent hazards for which adequate safeguards must be taken to protect personnel and property in conducting the tests.

(b) *Donning*. (1) No second stage donning is allowed in the tests in this paragraph. Test subjects may read the donning instructions to be provided with the device, if any. An uninflated lifejacket with size adjustment at its mid-range is given to each test subject with the instruction: ''Please don as quickly as possible, adjust to fit snugly, and inflate.'' Each subject must, within one minute, don the uninflated lifejacket, adjust it to fit snugly, and then activate the manual inflation mechanism.

NOTE: For this test the manual inflation mechanism may be disabled.

(2) The average time of all subjects to complete the test in paragraph (b)(1) of this section must not exceed 30 seconds. The criteria in this paragraph do not apply to the tests in paragraphs (b)(3) and (b)(4) of this section.

(3) The test in paragraph (b)(1) of this section is repeated with each subject wearing an insulated, hooded parka and gloves made from heavy, cotton-jersey (knit) fabric.

(4) The test in paragraph (b)(1) of this section is then repeated twice more with a fully inflated lifejacket. In the first test the subjects must wear swim suits and in the second test, parka and gloves.

(c) *Inflation Testing*. No second stage donning is allowed in the tests in this paragraph. A lifejacket with each automatic inflation mechanism disabled must be used for the tests prescribed in paragraphs (c)(1) and (c)(2) of this section. For the tests prescribed in paragraph (c)(4) of this section, remove any non-reusable cover or packaging from the lifejacket, but do not open any cover or closure which is intended to be closed when the lifejacket is worn in the uninflated condition.

(1) Each test subject dons an uninflated lifejacket and is instructed to enter the water and swim for approximately 30 seconds and then, on command, inflate the lifejacket using only oral inflation mechanisms. Within 30 seconds after the command is given, the lifejacket must be sufficiently inflated to float each subject with respiration unimpeded.

(2) Each test subject dons an uninflated lifejacket and is instructed to enter the water and swim for approximately 30 seconds, bring both hands to the surface, and then, on command, inflate the lifejacket using each manual inflation mechanism. Each test subject must find and operate all the manual inflation mechanisms within 5 seconds after the command is given. The manual inflation mechanisms must inflate the lifejacket sufficiently to float the wearers within 5 seconds after the mechanisms are operated. Within 20 seconds after activation each subject must be floating in the position described in paragraph (d)(3) of this section.

(3) One small and one large test subject don uninflated lifejackets and jump feet first from a height of 1 meter into the water. The automatic inflation mechanisms must inflate the lifejackets sufficiently to float the wearers within 10 seconds after the subjects enter the water. Within 20 seconds after entering the water each subject must be floating in the position described in paragraph (d)(3) of this section.

(4) Air at a pressure of 4.2 kPa (0.6 psig) is applied separately to each oral inflation mechanism of the lifejacket. In each application the chamber must fully inflate within 1 minute.

(5) Each oral inflation mechanism of an unpacked lifejacket is connected to a regulated air source constantly supplying air at a pressure of 7 kPa (1 psig). Each mechanism must pass at least 100,000 cc of air per minute.

(d) *Flotation stability*—(1) *Uninflated flotation stability*. Lifejackets with their automatic inflation mechanisms disabled must be used for this test. Each subject dons an uninflated lifejacket,

enters the water, and assumes an upright, slightly back of vertical, position. Each subject then relaxes. For each subject that floats, the uninflated lifejacket must not tend to turn the wearer face-down when the head is allowed to fall back.

(2) *Righting action.* (i) Each test subject dons an uninflated lifejacket, enters the water, allows the automatic inflation mechanism to inflate the lifejacket, and swims for 30 seconds. While swimming, freedom of movement and comfort are observed and noted by the person conducting the test. Freedom of movement and comfort must comply with §160.176-11(d). Also, each subject must demonstrate that the lifejacket can be adjusted while the subject is in the water.

(ii) Each subject then takes three gentle breast strokes and while still face-down in the water, relaxes completely while slowly exhaling to FRC. Each subject remains in this limp position long enough to determine if the lifejacket will turn the subject from the face-down position to a position in which the subject's breathing is not impaired. The time from the last breast stroke until breathing is not impaired is recorded. Each subject repeats these steps two additional times, and the average time for the three righting actions is calculated. This average time must not exceed 5 seconds.

(iii) If the lifejacket does not have automatic inflation mechanisms for all chambers, the tests in paragraphs (d)(2)(i) and (d)(2)(ii) of this section are repeated with each lifejacket fully inflated.

(iv) Each subject then performs the test in paragraph (d)(2)(ii) of this section with one chamber of the lifejacket deflated. This test is then repeated as many times as necessary to test the lifejacket with a different chamber deflated until each chamber has been tested in this manner.

(v) Each subject then performs the test in paragraph (d)(2)(ii) of this section but exhales to FRC at the end of the third breast stroke and holds the breath prior to relaxing.

(3) *Static measurements.* At the end of each test with each subject in §160.176–13(d)(2)(ii), through §160.176–13(d)(2)(v)—

(i) The freeboard (the distance from the water surface to the bottom of the mouth) must be at least 100 mm (4.0 in.) without repositioning of any part of the body and at least 120 mm (4.75 in.) after the head is positioned on the lifejacket for maximum freeboard and then relaxed;

(ii) The distance from water surface to the lower portion of the ear canal must be at least 50 mm (2 in.);

(iii) The torso angle (the angle between a vertical line and a line passing through the shoulder and hip) must be between 20° and 65° (back of vertical);

(iv) The face-plane angle (the angle between a vertical line and a line passing through the most forward part of the forehead and chin) must be between 15° and 60° (back of vertical);

(v) The lowest mark on a vertical scale 6 m (20 ft.) from and in front of the subject which the subject can see without moving the head must be no higher than 0.3 m (12 in.) from the water level.

(vi) The subject when looking to the side, must be able to see the water within 3 m (10 ft.) away; and

(vii) At least 75% of the retroreflective material on the outside of the lifejacket, and the PFD light, must be above the water.

(4) *Average requirements.* The test results for all subjects must be averaged for the following static measurements and must comply with the following:

(i) The average freeboard prior to positioning the head for maximum freeboard must be at least 120 mm (4.75 in.);

(ii) The average torso angle must be between 30° and 50° (back of vertical); and

(iii) The average face-plane angle must be between 20° and 50° (back of vertical).

(5) *''HELP'' Position.* Starting in a relaxed, face-up position of static balance, each subject brings the legs and arms in towards the body so as to attain the ''HELP'' position (a fetal position, but holding the head back). The lifejacket must not turn the subject face down in the water.

(e) *Jump test.* (1) Each test subject dons an uninflated lifejacket and with hands above head, jumps feet first, into the water from a height of 4.5 m (15 ft.).

No second stage donning is allowed during this test and the lifejacket must—

(i) Inflate automatically, float the subject to the surface, and stabilize the body with the mouth out of the water;

(ii) Maintain its intended position on the wearer;

(iii) Not be damaged; and

(iv) Not cause injury to the wearer.

(2) The jump test in paragraph (e)(1) of this section is repeated using a lifejacket which has been fully inflated manually.

(3) The jump test in paragraph (e)(2) of this section is then conducted with one chamber deflated. This test is then repeated as many times as necessary to test the lifejacket with a different chamber deflated until each chamber has been tested in this manner.

NOTE: Before conducting these tests at the 4.5 m height, subjects should first do the test from heights of 1 m and 3 m to lessen the possibility of injury. It is suggested that subjects wear a long-sleeve cotton shirt to prevent abrasions when testing the device in the inflated condition and that the teeth should be tightly clenched together when jumping.

(f) *Water emergence*—(1) *Equipment*. A pool with a wooden platform at one side must be used for this test. The platform must be 300 mm (12 in.) above the water surface and must not float on the water. The platform must have a smooth painted surface. Alternatively, a Coast Guard approved inflatable liferaft may be used in lieu of a platform.

(2) *Qualifying*. Each test subject enters the water wearing only a bathing suit and swims 25 m. The subject must then be able to emerge from the pool onto the platform using only his or her hands on the top of the platform as an aid and without pushing off of the bottom of the pool. Any subject unable to emerge onto the platform within 30 seconds is disqualified for this test. If less than ⅔ of the test subjects qualify, substitute subjects must be used.

(3) *Test*. Each qualified subject dons an inflated lifejacket, enters the water and swims 25 m. Afterward, at least ⅔ of the qualified subjects must then be able to climb out of the pool in the manner prescribed in paragraph (f)(2) of this section within 45 seconds while wearing the lifejacket. If marking on the lifejacket so indicates, and if the wearer can read the marking while the lifejacket is being worn, the subjects may deflate the device during the 45 second attempt.

(g) *Lanyard pull test and strength*. (1) An uninflated lifejacket is placed on a rigid metal test form built according to Figure 160.176–13(n)(2) and suspended vertically.

(2) The inflation handle of each manual inflation mechanism is attached to a force indicator. The force indicator is then used to activate each manual inflation mechanism separately. The force required to activate each mechanism is recorded. In each test the force must be between 25 and 70 N (5 and 15 lb.).

(3) A weight of 225 N (50 lb.) is in turn attached to the inflation handle of each manual inflation mechanism. The weight is then allowed to hang freely for 5 minutes from each manual inflation mechanism. The handle must not separate from the mechanism.

(h) *Temperature cycling tests*. (1) Three uninflated lifejackets, 2 packed and 1 unpacked, are maintained at room temperature (20 ±3 °C (68 + 6 °F)) for 4 hours and then at a temperature of 65 ±2 °C (150 ±5 °F) for 20 hours. The lifejackets are then maintained at room temperature for at least 4 hours, after which they are maintained at a temperature of minus 30 ±2 °C (−22 ±5 °F) for 20 hours. This cycle is then repeated once.

(2) Upon the completion of the conditioning in paragraph (h)(1) of this section all sealed or non-reusable packaging is removed from the two packed units. The lifejackets must show no functional deterioration after being inflated immediately after removal from the conditioning. The lifejackets must be inflated as follows:

(i) One unit which was packed during conditioning must fully inflate within 2 minutes using only oral inflation.

(ii) The other unit which was packed during conditioning must fully inflate within 45 seconds of submersion in water at 2 ±2 °C (37 ±5 °F) as a result of automatic inflation.

(iii) The unit which was unpacked during conditioning must fully inflate within 30 seconds of activation of the manual inflation mechanisms.

(3) The same 3 lifejackets used for the test in paragraph (h)(1) of this section are deflated and, with 2 repacked and 1 unpacked, are maintained at room temperature for 4 hours and then at a temperature of minus 30 ±2 °C (−22 ±5 °F) for 20 hours. The lifejackets are then stored at room temperature for at least 4 hours, after which they are maintained at a temperature of 65 ±2 °C (150 ±5 °F) for 20 hours. This cycle is then repeated once. The steps in paragraph (h)(2) of this section are then repeated, and the lifejackets must meet the criteria in that paragraph.

(i) [Reserved]

(j) *Buoyancy and inflation medium retention test.* A lifejacket which has been used in the tests in paragraph (h) of this section must be used for this test.

(1) *Equipment.* The following equipment is required for this test:

(i) A wire mesh basket that is large enough to hold the inflated lifejacket without compressing it, is designed not to allow the lifejacket to float free, and is heavy enough to overcome the buoyancy of the lifejacket.

(ii) A scale that is sensitive to 14 g (0.5 oz.) and that has an error of less than ±14 g (0.5 oz.).

(iii) A test tank, filled with fresh water, that is large enough to hold the basket with its top 50 mm (2 in.) below the surface without the basket touching the tank.

(2) *Method.* One inflation chamber is inflated using its automatic inflation mechanism. The lifejacket is placed in the basket. The basket is then suspended from the scale and submerged in the test tank with the lifejacket and basket completely below the water surface. An initial reading of the scale is taken after 30 minutes and again after 24 hours. The buoyancy of the lifejacket is the submerged weight of the basket minus the submerged weight of the basket with the lifejacket inside. This test is repeated as many times as necessary until each chamber has been tested. On each chamber that does not have an automatic inflation mechanism the manual or oral inflation mechanism may be used.

(3) *Requirement.* The buoyancy of each inflation chamber must be within the tolerances specified in the plans and specifications for the lifejacket required by § 160.176–5(a)(2) of this part. Each inflation chamber must retain at least 95% of its initial buoyancy after being submerged for 24 hours.

(k) *Uninflated floatation test.* A packed lifejacket, with all automatic inflation mechanisms disabled, is dropped from a height of 1 m (3 ft.) into fresh water. The lifejacket must remain floating on the surface of the water for at least 30 minutes. This test is repeated with an unpacked, uninflated lifejacket, with all automatic inflation mechanisms disabled.

(l) [Reserved]

(m) *Environmental tests*—(1) *Salt spray exposure.* An uninflated lifejacket is subjected to 720 hours of salt spray as specified by ASTM B 117 (incorporated by reference, see § 160.176–4). The automatic inflation mechanism(s) must not be activated by the salt spray. The lifejacket is then inflated first using the automatic inflation mechanism(s) and then twice more using first the manual mechanisms and then the oral mechanisms. The lifejacket must show no functional deterioration.

(2) *Rain exposure.* An uninflated lifejacket is mounted on a rigid metal test form built according to Figure 160.176–13(n)(2). The test form must be vertical. Spray nozzles that deliver 0.05 mm of water per second (0.7 inch/hour) over the area of the lifejacket at a temperature between 2 and 16 °C (35 and 60 °F) and at a 45° angle below horizontal toward the lifejacket are mounted 1.5 m (4.5 ft.) above the base of the test form. There must be at least 4 nozzles evenly spaced around the lifejacket at a horizontal distance of 1 m from the center of the lifejacket and each nozzle must deliver water at the same rate. Water is then sprayed on the lifejacket for 1 hour. The lifejacket must not inflate during the test.

(n) *Tensile tests.* Two lifejackets that have been subjected to the tests in paragraph (h) of this section must be used for these tests.

(1) *Body tensile test.* (i) In this test one lifejacket must be fully inflated and the other deflated.

(ii) Two unconnected rigid cylinders are passed through the body portion of each lifejacket, or through the encircling body strap for yoke style devices, with one closure fastened and adjusted

to its mid range, as shown in Figure 160.176–13(n)(1). Each cylinder must be 125 mm (5 inches) in diameter. The top cylinder is connected to a winch or pulley system. The bottom cylinder is connected to a test load which when combined with the weight of the lower cylinder and the linkage equals 325 kg (720 lb.). The winch or pulley system lifts the top cylinder so the test load is raised off of its support. The test load is left suspended for 30 minutes.

(iii) There must be no functional deterioration of any component of either lifejacket during the test. Each friction type closure must not permit slippage of more than 25 mm (1 in.).

(iv) If a lifejacket has friction type closures, the test must be repeated immediately after the lifejacket has been immersed in water for a least 2 minutes.

(v) The test is repeated until each different type of closure is tested separately.

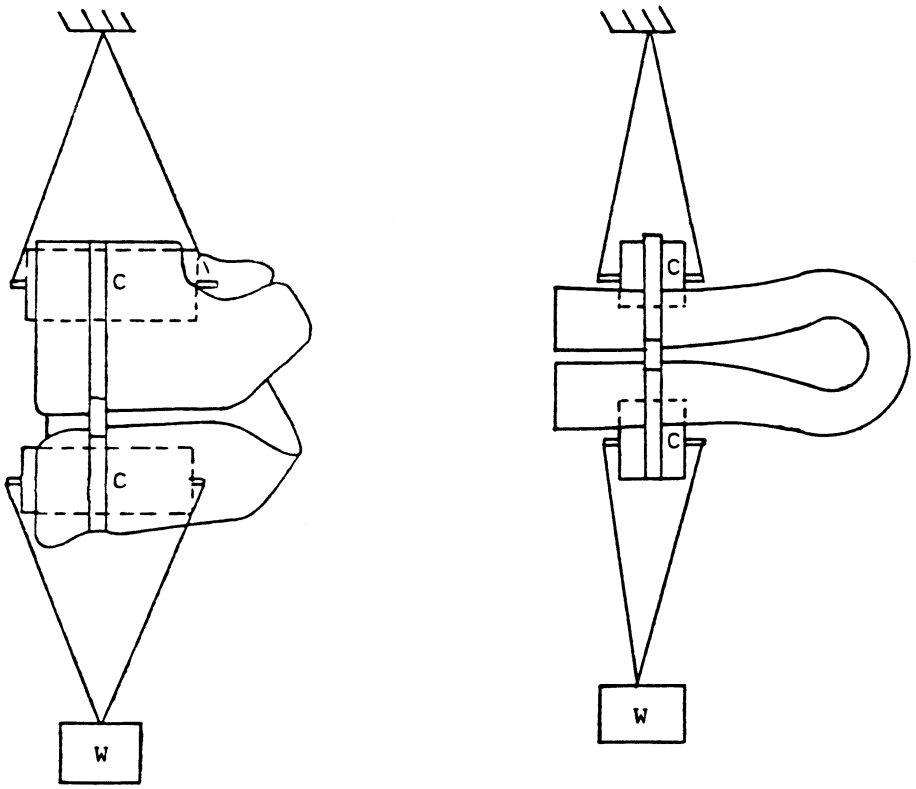

Vest style lifejacket

Yoke style lifejacket

C - Cylinder (5 inches in diameter)

W - Test Weight

Figure 160.176-13(n)(1) Body Tensile Test Arrangement

(2) *Shoulder tensile test.* Each shoulder section of a lifejacket is subjected to this test separately. A fully inflated lifejacket, with all closures fastened, must be secured to a rigid metal test form built according to Figure 160.176–13(n)(2). A 2 ±¼ in. wide web is passed through the shoulder section of the lifejacket and is connected to a winch or pulley system. The bottom portion of the form is connected to a dead weight load which when combined with the weight of the form and the linkage equals 90 kg. (200 lb.). The winch or pulley system is operated to raise the weight off of its support. The weight is left suspended for 30 minutes. There must be no functional deterioration of any component of the lifejacket during the test.

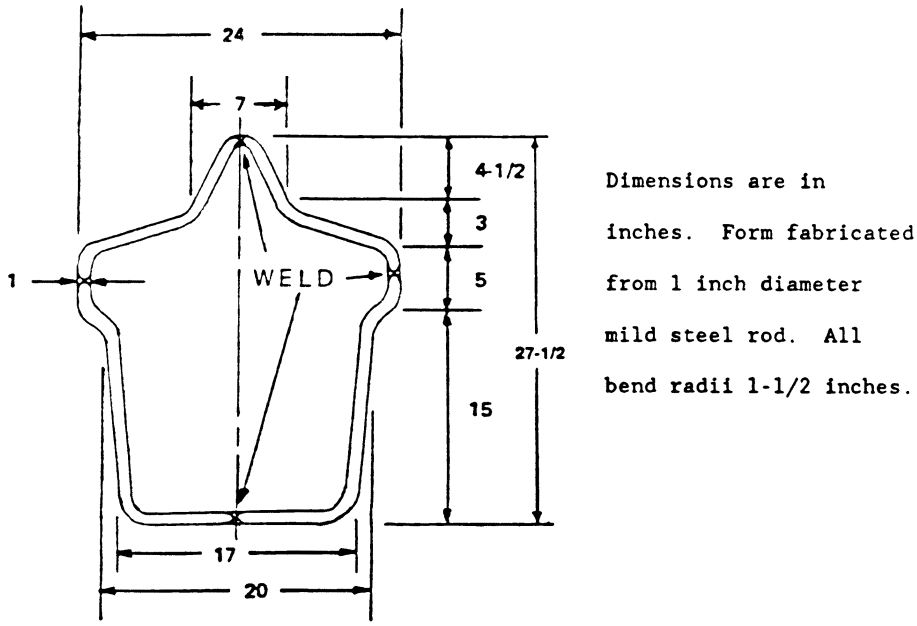

Figure 160.176-13(n)(2) Test Form

(3) *Strength of attachment of inflation mechanism.* (i) A fully inflated lifejacket is secured to a rigid metal test form as in Figure 160.176–13(n)(2), and the pressure of each inflated chamber is measured. The top portion of the form is then connected to a winch or pulley system. A 35 kg (75 lb.) weight is attached by a line to one of the inflation mechanisms as close as possible to the point of attachment on the lifejacket. The winch or pulley system is operated to raise the weight off of its support. The weight is left suspended for 5 minutes and then released. The inflation chamber to which the inflation mechanism is attached must not lose more than 3 kPa (0.4 psig) or 20% of its original pressure.

(ii) The test is paragraph (n)(3)(i) of this section is repeated until each type of inflation mechanism has been tested separately.

(iii) The test is then repeated as many additional times as necessary to test each joint in each type of inflation mechanism beyond its point of attachment to an inflation chamber. In each test the point of attachment must be as close as possible to the joint being tested.

(o) [Reserved]

(p) *Impact test.* (1) an uninflated lifejacket is secured to the test form shown in Figure 160.176–13(n)(2). The lifejacket, with the automatic inflation mechanism disabled, is secured to the form as it is intended to be worn. The lifejacket is accelerated to 25 m/s (50 mph) horizontally and is then dropped from a height of not more than 0.5 m (1.5 ft.) into the water in the following positions:

(i) Face down, shoulder forward.

(ii) Face down, shoulder back.

(iii) Back down, shoulder forward.

(iv) Back down, shoulder back.

(v) Left side down, shoulder forward.

(vi) Right side down, shoulder back.

(2) Following each impact, there must be no sign of functional deterioration, and the lifejacket must not come off of the test form. After each

impact the closures may be readjusted as necessary.

(3) Following the six impacts, the lifejacket must fully inflate using only its oral inflation mechanisms.

(4) The test in this paragraph is repeated on the same lifejacket after inflating, with manual inflation mechanisms, all chambers that have those mechanism.

(q) *Flame exposure test.* A lifejacket that has been subjected to the tests in paragraph (h) of this section must be used for this test.

(1) *Equipment.* The following equipment is required for this test:

(i) A test pan 300 mm by 450 mm by 60 mm (12 in. by 18 in. by 2½ in.) containing 12 mm (½ in.) of water under 25 mm (1 in.) of N-heptane.

(ii) an arrangement to hold the lifejacket over the N-heptane.

(2) *Method.* The test is only conducted when there is no significant air movement other than that caused by the fire. The N-heptane is ignited and allowed to burn for 30 seconds. A lifejacket which has been fully inflated with air is then passed through the flames in an upright, forward, vertical, free-hanging position with the bottom of the lifejacket 240 mm C 9½ in.) above the top edge of the test pan. The lifejacket is exposed to the flames for 2 seconds.

(3) *Requirement.* The lifejacket must not burn or melt for more than 6 seconds after being removed from the flames. The lifejacket must remain inflated throughout the test. If the lifejacket sustains any visible damage other than discoloration after being exposed to the flames, the lifejacket must—

(i) pass the test in paragraph (e)(2) of this section, except that only one subject is used and the test is done six times; and

(ii) pass the tensile test in paragraph (n)(1) of this section, except that a weight of 245 kg (540 lb.) is used in lieu of the 325 kg (720 lb.) weight.

(r) *Solvent exposure test.* Lifejackets with their automatic inflation mechanisms disabled must be used for this test. Two uninflated lifejackets that have been subjected to the tests in paragraph (h) of this section are totally submerged in diesel fuel, grade No. 2–D as defined in ASTM D 975 (incorporated by reference, see § 160.176–4), for 24 hours. The lifejackets are then removed and the excess fuel removed. One lifejacket must fully inflate using only its manual inflation mechanisms and the other using only its oral inflation mechanisms. The lifejackets must show no functional deterioration as a result of the test.

(s) *Puncture test.* A fully inflated lifejacket is placed on a flat, level surface. A test point 4 mm (5⁄32 in.) in diameter tapering to a rounded point, 1 mm (3⁄64 in.) in diameter, is pressed against an inflation chamber of the lifejacket perpendicular to the surface of the chamber at a rate of 300 mm/minute (12 in./minute). The test point is applied until the inflation chamber is punctured or the chamber walls are touching each other. The force required to puncture the inflation chamber or make the chamber walls touch each other is recorded. The force required must exceed 30 N (7 lb.).

(t) *Inflation chamber tests*—(1) *Over-pressure test.* One lifejacket is used in this test. Before pressurizing the lifejacket, each over-pressure valve, if any, must be blocked. One inflation chamber is then pressurized with air to 70 kPa (10 psig) and held for 5 minutes. After the 5 minute period, there must be no sign of permanent deformation, damage, or pressure loss of more than 3.5 kPa (0.5 psig). This test is then repeated as many times as necessary to test a different chamber until each chamber has been tested in this manner.

(2) *Air retention test.* One inflation chamber of a lifejacket is filled with air until air escapes from the over-pressure valve or, if the lifejacket does not have an over-pressure valve, until its design pressure, as stated in the plans and specifications, is reached. After 12 hours the lifejacket must still be firm with an internal pressure of at least 14 kPa (2.0 psig). This test is then repeated as many times as necessary to test a different chamber until each chamber has been tested in this manner.

(u) *Seam strength test.* Samples of each type of structural sewn seam must be subjected to and pass the ''Seam Strength (Sewability) Test''

specified in Underwriters Laboratories Standard UL 1191 except that the breaking strength of each seam in the directions of both greater and lesser thread count must be at least 400 N (90 lb.).

(v) [Reserved]

(w) *Visual examination*. One complete lifejacket must be visually examined for compliance with the requirements of §§ 160.176–9 and 160.176–11 of this part

(x) [Reserved]

(y) *Inflation chamber properties*. The tests in this paragraph must be run after successful completion of all other approval tests. The results of these tests will be used to check the quality of incoming lifejacket components and the production process. Test samples must come from one or more lifejackets that were each used in all of the tests in paragraphs (e), (j), (p), (s), and (t) of this section.

(1) *Grab breaking strength*. The grab breaking strength of chamber materials must be determined according to Method No. 5100 of Federal Test Method Standard 191A or ASTM D 751 (incorporated by reference, see § 160.176–4).

(2) *Tear strength*. The tear strength of chamber materials must be determined according to Method No. 5132 or 5134 of Federal Test Method Standard 191A or ASTM D 751 (incorporated by reference, see § 160.176–4).

(3) *Permeability*. The permeability of chamber materials must be determined according to ASTM D 1434 (incorporated by reference, see § 160.176–4) using CO_2 as the test gas.

(4) *Seam strength*. The seam strength of the seams in each inflation chamber of at least one lifejacket must be determined according to ASTM D 751 (incorporated by reference, see § 160.176–4) except that 25 by 200 mm (1 by 8 in.) samples may be used where insufficient length of straight seam is available.

(z) *Additional tests*. The Commandant may prescribe additional tests, if necessary, to approve novel or unique designs.

[CGD 78–1746, 54 FR 50320, Dec. 5, 1989, as amended by CGD 78–174b, 56 FR 29441, June 27, 1991; USCG–2000–7790, 65 FR 58464, Sept. 29, 2000]

§ 160.176–15 Production tests and inspections.

(a) *General*. (1) Production tests and inspections must be conducted in accordance with this section and subpart 159.007 of this chapter.

(2) The Commandant may prescribe additional production tests and inspections if needed to maintain quality control and check for compliance with the requirements in this subpart.

(b) *Test and inspection responsibilities*. In addition to responsibilities set out in part 159 of this chapter, each manufacturer of an inflatable lifejacket and each independent laboratory inspector must comply with the following, as applicable:

(1) *Manufacturer*. Each manufacturer must—

(i) Perform all required tests and examinations on each lifejacket lot before the independent laboratory inspector tests and inspects the lot;

(ii) Perform required testing of each incoming lot of inflation chamber material before using that lot in production;

(iii) Have procedures for maintaining quality control of the materials used, manufacturing operations, and the finished product;

(iv) Have a continuing program of employee training and a program for maintaining production and test equipment;

(v) Have an inspector from the independent laboratory observe the production methods used in producing the first lifejacket lot produced and observe any revisions made thereafter in production methods;

(vi) Admit the inspector and any Coast Guard representative to any place in the factory where work is done on lifejackets or component materials, and where completed lifejackets are stored; and

(vii) Allow the inspector and any Coast Guard representative to take samples of completed lifejackets or of components materials for tests prescribed in this subpart.

(2) *Independent laboratory*. (i) An inspector may not perform or supervise any production test or inspection unless—

(A) The manufacturer has a current approval certificate; and