AUTHENTICATED
U.S. GOVERNMENT
INFORMATION
GPO

CODE OF FEDERAL REGULATIONS

Title 47
Telecommunication

Parts 40 to 69

Revised as of October 1, 2014

Containing a codification of documents
of general applicability and future effect

As of October 1, 2014

Published by the Office of the Federal Register
National Archives and Records Administration
as a Special Edition of the Federal Register

U.S. GOVERNMENT OFFICIAL EDITION NOTICE

Legal Status and Use of Seals and Logos

The seal of the National Archives and Records Administration (NARA) authenticates the Code of Federal Regulations (CFR) as the official codification of Federal regulations established under the Federal Register Act. Under the provisions of 44 U.S.C. 1507, the contents of the CFR, a special edition of the Federal Register, shall be judicially noticed. The CFR is prima facie evidence of the original documents published in the Federal Register (44 U.S.C. 1510).

It is prohibited to use NARA's official seal and the stylized Code of Federal Regulations logo on any republication of this material without the express, written permission of the Archivist of the United States or the Archivist's designee. Any person using NARA's official seals and logos in a manner inconsistent with the provisions of 36 CFR part 1200 is subject to the penalties specified in 18 U.S.C. 506, 701, and 1017.

Use of ISBN Prefix

This is the Official U.S. Government edition of this publication and is herein identified to certify its authenticity. Use of the 0–16 ISBN prefix is for U.S. Government Printing Office Official Editions only. The Superintendent of Documents of the U.S. Government Printing Office requests that any reprinted edition clearly be labeled as a copy of the authentic work with a new ISBN.

U.S. GOVERNMENT PRINTING OFFICE

U.S. Superintendent of Documents • Washington, DC 20402–0001

http://bookstore.gpo.gov

Phone: toll-free (866) 512-1800; DC area (202) 512-1800

Table of Contents

	Page
Explanation	v
Title 47:	
Chapter I—Federal Communications Commission (Continued)	3
Finding Aids:	
Table of CFR Titles and Chapters	545
Alphabetical List of Agencies Appearing in the CFR	565
Table of OMB Control Numbers	575
List of CFR Sections Affected	585

Cite this Code: CFR

To cite the regulations in this volume use title, part and section number. Thus, 47 CFR 42.01 *refers to title 47, part 42, section 01.*

Explanation

The Code of Federal Regulations is a codification of the general and permanent rules published in the Federal Register by the Executive departments and agencies of the Federal Government. The Code is divided into 50 titles which represent broad areas subject to Federal regulation. Each title is divided into chapters which usually bear the name of the issuing agency. Each chapter is further subdivided into parts covering specific regulatory areas.

Each volume of the Code is revised at least once each calendar year and issued on a quarterly basis approximately as follows:

Title 1 through Title 16.....as of January 1
Title 17 through Title 27.....as of April 1
Title 28 through Title 41.....as of July 1
Title 42 through Title 50.....as of October 1

The appropriate revision date is printed on the cover of each volume.

LEGAL STATUS

The contents of the Federal Register are required to be judicially noticed (44 U.S.C. 1507). The Code of Federal Regulations is prima facie evidence of the text of the original documents (44 U.S.C. 1510).

HOW TO USE THE CODE OF FEDERAL REGULATIONS

The Code of Federal Regulations is kept up to date by the individual issues of the Federal Register. These two publications must be used together to determine the latest version of any given rule.

To determine whether a Code volume has been amended since its revision date (in this case, October 1, 2014), consult the ''List of CFR Sections Affected (LSA),'' which is issued monthly, and the ''Cumulative List of Parts Affected,'' which appears in the Reader Aids section of the daily Federal Register. These two lists will identify the Federal Register page number of the latest amendment of any given rule.

EFFECTIVE AND EXPIRATION DATES

Each volume of the Code contains amendments published in the Federal Register since the last revision of that volume of the Code. Source citations for the regulations are referred to by volume number and page number of the Federal Register and date of publication. Publication dates and effective dates are usually not the same and care must be exercised by the user in determining the actual effective date. In instances where the effective date is beyond the cutoff date for the Code a note has been inserted to reflect the future effective date. In those instances where a regulation published in the Federal Register states a date certain for expiration, an appropriate note will be inserted following the text.

OMB CONTROL NUMBERS

The Paperwork Reduction Act of 1980 (Pub. L. 96–511) requires Federal agencies to display an OMB control number with their information collection request.

Many agencies have begun publishing numerous OMB control numbers as amendments to existing regulations in the CFR. These OMB numbers are placed as close as possible to the applicable recordkeeping or reporting requirements.

PAST PROVISIONS OF THE CODE

Provisions of the Code that are no longer in force and effect as of the revision date stated on the cover of each volume are not carried. Code users may find the text of provisions in effect on any given date in the past by using the appropriate List of CFR Sections Affected (LSA). For the convenience of the reader, a ''List of CFR Sections Affected'' is published at the end of each CFR volume. For changes to the Code prior to the LSA listings at the end of the volume, consult previous annual editions of the LSA. For changes to the Code prior to 2001, consult the List of CFR Sections Affected compilations, published for 1949-1963, 1964-1972, 1973-1985, and 1986-2000.

''[RESERVED]'' TERMINOLOGY

The term ''[Reserved]'' is used as a place holder within the Code of Federal Regulations. An agency may add regulatory information at a ''[Reserved]'' location at any time. Occasionally ''[Reserved]'' is used editorially to indicate that a portion of the CFR was left vacant and not accidentally dropped due to a printing or computer error.

INCORPORATION BY REFERENCE

What is incorporation by reference? Incorporation by reference was established by statute and allows Federal agencies to meet the requirement to publish regulations in the Federal Register by referring to materials already published elsewhere. For an incorporation to be valid, the Director of the Federal Register must approve it. The legal effect of incorporation by reference is that the material is treated as if it were published in full in the Federal Register (5 U.S.C. 552(a)). This material, like any other properly issued regulation, has the force of law.

What is a proper incorporation by reference? The Director of the Federal Register will approve an incorporation by reference only when the requirements of 1 CFR part 51 are met. Some of the elements on which approval is based are:

(a) The incorporation will substantially reduce the volume of material published in the Federal Register.

(b) The matter incorporated is in fact available to the extent necessary to afford fairness and uniformity in the administrative process.

(c) The incorporating document is drafted and submitted for publication in accordance with 1 CFR part 51.

What if the material incorporated by reference cannot be found? If you have any problem locating or obtaining a copy of material listed as an approved incorporation by reference, please contact the agency that issued the regulation containing that incorporation. If, after contacting the agency, you find the material is not available, please notify the Director of the Federal Register, National Archives and Records Administration, 8601 Adelphi Road, College Park, MD 20740-6001, or call 202-741-6010.

CFR INDEXES AND TABULAR GUIDES

A subject index to the Code of Federal Regulations is contained in a separate volume, revised annually as of January 1, entitled CFR INDEX AND FINDING AIDS. This volume contains the Parallel Table of Authorities and Rules. A list of CFR titles, chapters, subchapters, and parts and an alphabetical list of agencies publishing in the CFR are also included in this volume.

An index to the text of ''Title 3—The President'' is carried within that volume.

The Federal Register Index is issued monthly in cumulative form. This index is based on a consolidation of the ''Contents'' entries in the daily Federal Register.

A List of CFR Sections Affected (LSA) is published monthly, keyed to the revision dates of the 50 CFR titles.

REPUBLICATION OF MATERIAL

There are no restrictions on the republication of material appearing in the Code of Federal Regulations.

INQUIRIES

For a legal interpretation or explanation of any regulation in this volume, contact the issuing agency. The issuing agency's name appears at the top of odd-numbered pages.

For inquiries concerning CFR reference assistance, call 202–741–6000 or write to the Director, Office of the Federal Register, National Archives and Records Administration, 8601 Adelphi Road, College Park, MD 20740-6001 or e-mail *fedreg.info@nara.gov*.

SALES

The Government Printing Office (GPO) processes all sales and distribution of the CFR. For payment by credit card, call toll-free, 866-512-1800, or DC area, 202-512-1800, M-F 8 a.m. to 4 p.m. e.s.t. or fax your order to 202-512-2104, 24 hours a day. For payment by check, write to: US Government Printing Office – New Orders, P.O. Box 979050, St. Louis, MO 63197-9000.

ELECTRONIC SERVICES

The full text of the Code of Federal Regulations, the LSA (List of CFR Sections Affected), The United States Government Manual, the Federal Register, Public Laws, Public Papers of the Presidents of the United States, Compilation of Presidential Documents and the Privacy Act Compilation are available in electronic format via *www.ofr.gov*. For more information, contact the GPO Customer Contact Center, U.S. Government Printing Office. Phone 202-512-1800, or 866-512-1800 (toll-free). E-mail, *ContactCenter@gpo.gov*.

The Office of the Federal Register also offers a free service on the National Archives and Records Administration's (NARA) World Wide Web site for public law numbers, Federal Register finding aids, and related information. Connect to NARA's web site at *www.archives.gov/federal-register*.

The e-CFR is a regularly updated, unofficial editorial compilation of CFR material and Federal Register amendments, produced by the Office of the Federal Register and the Government Printing Office. It is available at *www.ecfr.gov*.

CHARLES A. BARTH,
Director,
Office of the Federal Register.
October 1, 2014.

THIS TITLE

Title 47—TELECOMMUNICATION is composed of five volumes. The parts in these volumes are arranged in the following order: Parts 0–19, parts 20–39, parts 40–69, parts 70–79, and part 80 to end. All five volumes contain chapter I—Federal Communications Commission. The last volume, part 80 to end, also includes chapter II—Office of Science and Technology Policy and National Security Council, chapter III—National Telecommunications and Information Administration, Department of Commerce, and chapter IV—National Telecommunications and Information Administration, Department of Commerce, and National Highway Traffic Safety Administration, Department of Transportation. The contents of these volumes represent all current regulations codified under this title of the CFR as of October 1, 2014.

Part 73 contains a numerical designation of FM broadcast channels (§ 73.201) and a table of FM allotments designated for use in communities in the United States, its territories, and possessions (§ 73.202). Part 73 also contains a numerical designation of television channels (§ 73.603) and a table of allotments which contain channels designated for the listed communities in the United States, its territories, and possessions (§ 73.606).

The OMB control numbers for the Federal Communications Commission, appear in § 0.408 of chapter I. For the convenience of the user § 0.408 is reprinted in the Finding Aids section of the second through fifth volumes.

For this volume, Michele Bugenhagen was Chief Editor. The Code of Federal Regulations publication program is under the direction of John Hyrum Martinez, assisted by Jim Hemphill.

Title 47—Telecommunication

(This book contains parts 40 to 69)

Part

CHAPTER I—Federal Communications Commission (Continued) 42

CHAPTER I—FEDERAL COMMUNICATIONS COMMISSION (CONTINUED)

SUBCHAPTER B—COMMON CARRIER SERVICES (CONTINUED)

Part		*Page*
40–41	[Reserved]	
42	Preservation of records of communication common carriers	5
43	Reports of communication common carriers and certain affiliates	7
51	Interconnection	14
52	Numbering	89
53	Special provisions concerning Bell operating companies	115
54	Universal service	120
59	Infrastructure sharing	243
61	Tariffs	244
63	Extension of lines, new lines, and discontinuance, reduction, outage and impairment of service by common carriers; and grants of recognized private operating agency status	283
64	Miscellaneous rules relating to common carriers	315
65	Interstate rate of return prescription procedures and methodologies	455
68	Connection of terminal equipment to the telephone network	464
69	Access charges	498

SUPPLEMENTARY PUBLICATIONS: *Annual Reports of the Federal Communications Commission to Congress.*

Federal Communications Commission Reports of Orders and Decisions.

Communications Act of 1934 (with amendments and index thereto), Recap. Version, May 1989.

Study Guide and Reference Material for Commercial Radio Operator Examinations, May 1979 edition.

SUBCHAPTER B—COMMON CARRIER SERVICES (CONTINUED)

PARTS 40–41 [RESERVED]

PART 42—PRESERVATION OF RECORDS OF COMMUNICATION COMMON CARRIERS

APPLICABILITY

Sec.
42.01 Applicability.

GENERAL INSTRUCTIONS

42.1 Scope of the regulations in this part.
42.2 Designation of a supervisory official.
42.3 Protection and storage of records.
42.4 Index of records.
42.5 Preparation and preservation of reproductions of original records.
42.6 Retention of telephone toll records.
42.7 Retention of other records.

SPECIFIC INSTRUCTIONS FOR CARRIERS OFFERING INTEREXCHANGE SERVICES

42.10 Public availability of information concerning interexchange services.
42.11 Retention of information concerning detariffed interexchange services.

AUTHORITY: Sec. 4(i), 48 Stat. 1066, as amended, 47 U.S.C. 154(i). Interprets or applies secs. 219 and 220, 48 Stat. 1077–78, 47 U.S.C. 219, 220.

SOURCE: 51 FR 32653, Sept. 15, 1986, unless otherwise noted.

APPLICABILITY

§ 42.01 Applicability.

This part prescribes the regulations governing the preservation of records of communication common carriers that are fully subject to the jurisdiction of the Commission.

GENERAL INSTRUCTIONS

§ 42.1 Scope of the regulations in this part.

(a) The regulations in this part apply to all accounts, records, memoranda, documents, papers, and correspondence prepared by or on behalf of the carrier as well as those which come into its possession in connection with the acquisition of property, such as by purchase, consolidation, merger, etc.

(b) The regulations in this part shall not be construed as requiring the preparation of accounts, records, or memoranda not required to be prepared by other regulations, such as the Uniform System of Accounts, except as provided hereinafter.

(c) The regulations in this part shall not be construed as excusing compliance with any other lawful requirement for the preservation of records.

§ 42.2 Designation of a supervisory official.

Each carrier subject to the regulations in this part shall designate one or more officials to supervise the preservation of its records.

§ 42.3 Protection and storage of records.

The carrier shall protect records subject to the regulations in this part from damage from fires, and other hazards and, in the selection of storage spaces, safeguard the records from unnecessary exposure to deterioration.

§ 42.4 Index of records.

Each carrier shall maintain at its operating company headquarters a master index of records. The master index shall identify the records retained, the related retention period, and the locations where the records are maintained. The master index shall be subject to review by Commission staff and the Commission shall reserve the right to add records, or lengthen retention periods upon finding that retention periods may be insufficient for its regulatory purposes. When any records are lost or destroyed before expiration of the retention period set forth in the master index, a certified statement shall be added to the master index, as soon as practicable, listing, as far as may be determined, the records lost or destroyed and describing the circumstances of the premature loss or destruction. At each office of the carrier where records are kept or stored, the carrier shall arrange, file, and currently index the records on site so that

they may be readily identified and made available to representatives of the Commission.

§ 42.5 Preparation and preservation of reproductions of original records.

(a) Each carrier may use a retention medium of its choice to preserve records in lieu of original records, provided that they observe the requirements of paragraphs (b) and (c) of this section.

(b) A paper or microfilm record need not be created to satisfy the requirements of this part if the record is initially prepared in machine-readable medium such as punched cards, magnetic tapes, and disks. Each record kept in a machine-readable medium shall be accompanied by a statement clearly indicating the type of data included in the record and certifying that the information contained in it has been accurately duplicated. This statement shall be executed by a person duplicating the records. The records shall be indexed and retained in such a manner that they are easily accessible, and the carrier shall have the facilities available to locate, identify and reproduce the records in readable form without loss of clarity.

(c) Records may be retained on microfilm provided they meet the requirements of the Federal Business Records Act (28 U.S.C. 1732).

§ 42.6 Retention of telephone toll records.

Each carrier that offers or bills toll telephone service shall retain for a period of 18 months such records as are necessary to provide the following billing information about telephone toll calls: the name, address, and telephone number of the caller, telephone number called, date, time and length of the call. Each carrier shall retain this information for toll calls that it bills whether it is billing its own toll service customers for toll calls or billing customers for another carrier.

[51 FR 39536, Oct. 29, 1986]

§ 42.7 Retention of other records.

Except as specified in § 42.6, each carrier shall retain records identified in its master index of records for the period established therein. Records relevant to complaint proceedings not already contained in the index of records should be added to the index as soon as a complaint is filed and retained until final disposition of the complaint. Records a carrier is directed to retain as the result of a proceeding or inquiry by the Commission to the extent not already contained in the index will also be added to the index and retained until final disposition of the proceeding or inquiry.

SPECIFIC INSTRUCTIONS FOR CARRIERS OFFERING INTEREXCHANGE SERVICES

§ 42.10 Public availability of information concerning interexchange services.

(a) A nondominant interexchange carrier (IXC) shall make available to any member of the public, in at least one location, during regular business hours, information concerning its current rates, terms and conditions for all of its international and interstate, domestic, interexchange services. Such information shall be made available in an easy to understand format and in a timely manner. Following an inquiry or complaint from the public concerning rates, terms and conditions for such services, a carrier shall specify that such information is available and the manner in which the public may obtain the information.

(b) In addition, a nondominant IXC that maintains an Internet website shall make such rate and service information specified in paragraph (a) of this section available on-line at its Internet website in a timely and easily accessible manner, and shall update this information regularly.

[64 FR 19725, Apr. 22, 1999, as amended at 66 FR 16879, Mar. 28, 2001]

§ 42.11 Retention of information concerning detariffed interexchange services.

(a) A nondominant IXC shall maintain, for submission to the Commission and to state regulatory commissions upon request, price and service information regarding all of the carrier's international and interstate, domestic, interexchange service offerings. A commercial mobile radio service (CMRS) provider shall maintain such price and

service information only about its international common carrier service offerings and only for those routes on which the CMRS provider is classified as dominant under §63.10 of this Chapter due to an affiliation with a foreign carrier that collects settlement payments from U.S. carriers for terminating U.S. international switched traffic at the foreign end of the route. Such a CMRS provider is not required to maintain its price and service information, however, on any such affiliated route if it provides service on that route solely through the resale of an unaffiliated facilities-based provider's international switched services. The price and service information maintained for purposes of this paragraph shall include documents supporting the rates, terms, and conditions of the carrier's international and interstate, domestic, interexchange offerings. The information maintained pursuant to this section shall be maintained in a manner that allows the carrier to produce such records within ten business days. For purposes of this paragraph, *affiliated* and *foreign carrier* are defined in §63.09 of this chapter.

(b) The price and service information maintained pursuant to this section shall be retained for a period of at least two years and six months following the date the carrier ceases to provide services pursuant to such rates, terms and conditions.

[61 FR 59366, Nov. 22, 1996, as amended at 62 FR 59604, Nov. 4, 1997; 64 FR 19725, Apr. 22, 1999; 66 FR 16879, Mar. 28, 2001]

PART 43—REPORTS OF COMMUNICATION COMMON CARRIERS AND CERTAIN AFFILIATES

Sec.

43.01 Applicability.
43.11 Reports of local exchange competition data.
43.21 Transactions with affiliates.
43.41 [Reserved]
43.43 Reports of proposed changes in depreciation rates.
43.51 Contracts and concessions.
43.61 Reports of international telecommunications traffic.
43.62 Reporting requirements for holders of international Section 214 authorizations and providers of international services.
43.72 [Reserved]
43.82 International circuit status reports.

AUTHORITY: 47 U.S.C. 154; Telecommunications Act of 1996; Pub. L. 104–104, sec. 402(b)(2)(B), (c), 110 Stat. 56 (1996) as amended unless otherwise noted. 47 U.S.C. 211, 219, 220, as amended; Cable Landing License Act of 1921, 47 U.S.C. 35–39.

SOURCE: 28 FR 13214, Dec. 5, 1963, unless otherwise noted.

§43.01 Applicability.

(a) The sections in this part include requirements which have been promulgated under authority of sections 211 and 219 of the Communications Act of 1934, as amended, with respect to the filing by communication common carriers and certain of their affiliates of periodic reports and certain other data, but do not include certain requirements relating to the filing of information with respect to specific services, accounting systems and other matters incorporated in other parts of this chapter.

(b) Except as provided in paragraphs (c) and (d) of this section, carriers becoming subject to the provisions of the several sections of this part for the first time, shall, within thirty (30) days of becoming subject, file the required data as set forth in the various sections of this part.

(c) Carriers becoming subject to the provisions of §§43.21 and 43.43 for the first time, because their annual operating revenues equal or exceed the indexed revenue threshold for a given year, shall begin collecting data pursuant to such provisions in the calendar year following the publication of that indexed revenue threshold in the FEDERAL REGISTER. With respect to such initial filing of reports by any carrier, pursuant to the provisions of §43.21 (d), (e), (f), (g), (h), (i), (j), and (k), the carrier is to begin filing data for the calendar year following the publication of that indexed revenue threshold in the FEDERAL REGISTER by April 1 of the second calendar year following publication of that indexed revenue threshold in the FEDERAL REGISTER.

(d) Common carriers subject to the provisions of §43.11 shall file data semiannually. Reports shall be filed each year on or before March 1st (reporting data about their deployment of local exchange services as of December 31 of

the prior year) and September 1st (reporting data about their deployment of local exchange services as of June 31 of the current year). Common carriers becoming subject to the provisions of § 43.11 for the first time within a calendar year shall file data for the reporting period in which they become eligible and semi-annually thereafter. Common carriers subject to the provisions of § 43.11 shall make an initial filing of the FCC Form 477 on May 15, 2000 (reporting data about their deployment of local exchange services as of December 31, 1999).

[28 FR 13214, Dec. 5, 1963, as amended at 62 FR 39778, July 24, 1997; 65 FR 19685, Apr. 12, 2000; 78 FR 49149, Aug. 13, 2013]

§ 43.11 Reports of local exchange competition data.

(a) All common carriers and their affiliates (as defined in 47 U.S.C. 153(1)) providing telephone exchange or exchange access service (as defined in 47 U.S.C. 153(16) and (47)), commercial mobile radio service (CMRS) providers offering mobile telephony (as defined in § 20.15(b)(1) of this chapter), and Interconnected Voice over IP service providers (as defined in § 9.3 of this chapter), shall file with the Commission a completed FCC Form 477, in accordance with the Commission's rules and the instructions to the FCC Form 477.

(b) Respondents identified in paragraph (a) of this section shall include in each report a certification signed by an appropriate official of the respondent (as specified in the instructions to FCC Form 477) and shall report the title of their certifying official.

(c) Disclosure of data contained in FCC Form 477 will be addressed as follows:

(1) Emergency operations contact information contained in FCC Form 477 are information that should not be routinely available for public inspection pursuant to § 0.457 of this chapter.

(2) Respondents may make requests for Commission non-disclosure of the following data contained in FCC Form 477 under § 0.459 of this chapter by so indicating on Form 477 at the time that the subject data are submitted:

(i) Provider-specific subscription data and

(ii) Provider-specific mobile deployment data that includes specific spectrum and speed parameters that may be used by providers for internal network planning purposes.

(3) Respondents seeking confidential treatment of any other data contained in FCC Form 477 must submit a request that the data be treated as confidential with the submission of their Form 477 filing, along with their reasons for withholding the information from the public, pursuant to § 0.459 of this chapter.

(4) The Commission shall make all decisions regarding non-disclosure of provider-specific information, except that the Chief of the Wireline Competition Bureau may release provider-specific information to:

(i) A state commission provided that the state commission has protections in place that would preclude disclosure of any confidential information, and

(ii) ''Eligible entities,'' as those entities are defined in the Broadband Data Improvement Act, in an aggregated format and pursuant to confidentiality conditions prescribed by the Commission, and

(iii) Others, to the extent that access to such data can be accomplished in a manner that addresses concerns about the competitive sensitivity of the data and precludes public disclosure of any confidential information.

(d) Respondents identified in paragraph (b) of this section shall file a revised version of FCC Form 477 if and when they discover a significant error in their filed FCC Form 477. For counts, a difference amounting to 5 percent of the filed number is considered significant. For percentages, a difference of 5 percentage points is considered significant.

(e) Failure to file FCC Form 477 in accordance with the Commission's rules and the instructions to Form 477 may lead to enforcement action pursuant to the Act and any other applicable law.

[65 FR 19685, Apr. 12, 2000, as amended at 69 FR 77938, Dec. 29, 2004; 73 FR 37881, July 2, 2008; 78 FR 49149, Aug. 13, 2013]

§ 43.21 Transactions with affiliates.

(a) Communication common carriers having annual operating revenues in

excess of the indexed revenue threshold, as defined in §32.9000, and certain companies (as indicated in paragraph (b) of this section) directly or indirectly controlling such carriers shall file with the Commission annual reports or an annual letter as provided in this section. Except as provided in paragraph (b) of this section, each annual report required by this section shall be filed no later than April 1 of each year, covering the preceding calendar year. It shall be filed on the appropriate report form prescribed by the Commission (see §1.785 of this chapter) and shall contain full and specific answers to all questions propounded and information requested in the currently effective report forms. The number of copies to be filed shall be specified in the applicable report form. At least one copy of this report shall be signed on the signature page by the responsible accounting officer. A copy of each annual report shall be as retained in the principal office of the respondent and shall be filed in such manner to be readily available for reference and inspection.

(b) Each company, not itself a communication common carrier, that directly or indirectly controls any communication common carrier that has annual operating revenues equal to or above the indexed revenue threshold, as defined in §32.9000, shall file annually with the Commission, not later than the date prescribed by the Securities and Exchange Commission for its purposes, two complete copies of any annual report Forms 10–K (or any superseding form) filed with that Commission.

(c) Each miscellaneous common carrier (as defined by §21.2 of this chapter) with operating revenues for a calendar year in excess of the indexed revenue threshold, as defined in §32.9000, shall file with the Common Carrier Bureau Chief a letter showing its operating revenues for that year and the value of its total communications plant at the end of that year. This letter must be filed no later than April 1 of the following year. Those miscellaneous common carriers with annual operating revenues that equal or surpass the indexed revenue threshold for the first time may file the letter up to one month after publication of the adjusted revenue threshold in the FEDERAL REGISTER, but in no event shall such carriers be required to file the letter prior to April 1.

(d) Each communications common carrier required by order to file a manual allocating its costs between regulated and nonregulated operations shall file, on or before April 1:

(1) A three-year forecast of regulated and nonregulated use of network plant for the current calendar year and the two calendar years following, and investment pool projections and allocations for the current calendar year; and

(2) A report of the actual use of network plant investment for the prior calendar year.

(e) Each incumbent local exchange carrier, except mid-sized incumbent local exchange carriers, as defined by §32.9000 with annual operating revenues equal to or above the indexed revenue threshold shall file, no later than April 1 of each year:

(1) Its revenues, expenses and investment for all accounts established in part 32 of this chapter, on an operating company basis,

(2) The same part 32 of this chapter, on a study area basis, with data for regulated and nonregulated operations for those accounts which are related to the carrier's revenue requirement, and

(3) The separations categories on a study area basis, with each category further divided into access elements and a nonaccess interstate category.

(f) Each incumbent local exchange carrier with operating revenues for the preceding year that equal or exceed the indexed revenue threshold shall file, no later than April 1 of each year, a report showing for the previous calendar year its revenues, expenses, taxes, plant in service, other investment and depreciation reserves, and other such data as are required by the Commission, on computer media prescribed by the Commission. The total operating results shall be allocated between regulated and nonregulated operations, and the regulated data shall be further divided into the following categories: State and interstate, and the interstate will be further divided into common line, traffic sensitive access, special access, and nonaccess.

(g) Each incumbent local exchange carrier for whom price cap regulation is mandatory and every incumbent local exchange carrier that elects to be covered by the price cap rules shall file, by April 1 of each year, a report designed to capture trends in service quality under price cap regulation. The report shall contain data relative to network measures of service quality, as defined by the Wireline Competition Bureau, from the previous calendar year on a study area basis.

(h) Each incumbent local exchange carrier for whom price cap regulation is mandatory shall file, by April 1 of each year, a report designed to capture trends in service quality under price cap regulation. The report shall contain data relative to customer measures of service quality, as defined by the Wireline Competition Bureau, from the previous calendar year a study area basis.

(i) Each incumbent local exchange carrier for whom price regulation is mandatory shall file, by April 1 of each year, a report containing data from the previous calendar year on a study area basis that are designed to capture trends in telephone industry infrastructure development under price cap regulation.

(j) Each incumbent local exchange carrier with annual operating revenues that equal or exceed the indexed revenue threshold shall file, no later than April 1 of each year, a report containing data from the previous calendar year on an operating company basis. Such report shall combine statistical data designed to monitor network growth, usage, and reliability.

(k) Each designated interstate carrier with operating revenues for the preceding year that equal or exceed the indexed revenue threshold shall file, no later than April 1 of each year, a report showing for the previous calendar year its revenues, expenses, taxes, plant in service, other investments and depreciation reserves, and such other data as are required by the Commission, on computer media prescribed by the Commission. The total operating results shall be allocated between regulated and nonregulated operations, and the regulated data shall be further divided into the following categories: State and interstate, and the interstate will be further divided into common line, traffic sensitive access, special access, and nonaccess.

[28 FR 13214, Dec. 5, 1963, as amended at 49 FR 10122, Mar. 19, 1984; 50 FR 41153, Oct. 9, 1985; 51 FR 37024, Oct. 17, 1986; 52 FR 35918, Sept. 24, 1987; 58 FR 36143, July 6, 1993; 61 FR 50245, Sept. 25, 1996; 62 FR 39778, July 24, 1997; 67 FR 5700, Feb. 6, 2002; 67 FR 13225, Mar. 21, 2002]

§ 43.41 [Reserved]

§ 43.43 Reports of proposed changes in depreciation rates.

(a) Each communication common carrier with annual operating expenses that equal or exceed the indexed revenue threshold, as defined in § 32.9000, and that has been found by this Commission to be a dominant carrier with respect to any communications service shall, before making any changes in the depreciation rates applicable to its operated plant, file with the Commission a report furnishing the data described in the subsequent paragraphs of this section, and also comply with the other requirements thereof.

(b) Each such report shall contain the following:

(1) A schedule showing for each class and subclass of plant (whether or not the depreciation rate is proposed to be changed) an appropriate designation therefor, the depreciation rate currently in effect, the proposed rate, and the service-life and net-salvage estimates underlying both the current and proposed depreciation rates;

(2) An additional schedule showing for each class and subclass, as well as the totals for all depreciable plant, (i) the book cost of plant at the most recent date available, (ii) the estimated amount of depreciation accruals determined by applying the currently effective rate to the amount of such book cost, (iii) the estimated amount of depreciation accruals determined by applying the rate proposed to be used to the amount of such book cost, and (iv) the difference between the amounts determined in paragraphs (b)(2) (ii) and (iii) of this section;

(3) A statement giving the reasons for the proposed change in each rate;

(4) A statement describing the method or methods employed in the development of the service-life and salvage estimates underlying each proposed change in a depreciation rate; and

(5) The date as of which the revised rates are proposed to be made effective in the accounts.

(c) Except as specified in paragraphs (c)(1) and (c)(3) of this section, when the change in the depreciation rate proposed for any class or subclass of plant (other than one occasioned solely by a shift in the relative investment in the several subclasses of the class of plant) amounts to twenty percent (20%) or more of the rate currently applied thereto, or when the proposed change will produce an increase or decrease of one percent (1%) or more of the aggregate depreciation charges for all depreciable plant (based on the amounts determined in compliance with paragraph (b)(2) of this section) the carrier shall supplement the data required by paragraph (b) of this section) with copies of the underlying studies, including calculations and charts, developed by the carrier to support service-life and net-salvage estimates. If a carrier must submit data of a repetitive nature to comply with this requirement, the carrier need only submit a fully illustrative portion thereof.

(1) A Local Exchange Carrier regulated under price caps, pursuant to §§61.41 through 61.49 of this chapter, is not required to submit the supplemental information described in paragraph (c) introductory text of this section for a specific account if: The carrier's currently prescribed depreciation rate for the specific accounts derived from basic factors that fall within the basic factor ranges established for that same account; and the carrier's proposed depreciation rate for the specific account would also be derived from basic factors that fall within the basic factor ranges for the same account.

(2) Local Exchange Carriers that are regulated under price caps, pursuant to §§61.41 through 61.49 of this chapter, and have selected basic factors that fall within the basic factor ranges for all accounts are exempt from paragraphs (b)(3), (b)(4), and (c) introductory text of this section. They shall instead comply with paragraphs (b)(1), (b)(2) and (b)(5) of this section and provide a book and theoretical reserve summary and a summary of basic factors underlying proposed rates by account.

(3) Interexchange carriers regulated under price caps, pursuant to §§61.41 through 61.49 of this chapter, are exempted from submitting the supplemental information as described in paragraph (c) introductory text of this section. They shall instead submit: Generation data, a summary of basic factors underlying proposed depreciation rates by account and a short narrative supporting those basic factors, including company plans of forecasted retirements and additions, recent annual retirements, salvage and cost of removal.

(d) Each report shall be filed in duplicate and the original shall be signed by the responsible official to whom correspondence related thereto should be addressed.

(e) Unless otherwise directed or approved by the Commission, the following shall be observed: Proposed changes in depreciation rates shall be filed at least ninety (90) days prior to the last day of the month with respect to which the revised rates are first to be applied in the accounts (e.g., if the new rates are to be first applied in the depreciation accounts for September, they must be filed on or before July 1). Such rates may be made retroactive to a date not prior to the beginning of the year in which the filing is made: *Provided however*, that in no event shall a carrier for which the Commission has prescribed depreciation rates make any changes in such rates unless the changes are prescribed by the Commission. Carriers who select basic factors that fall within the basic factor ranges for all accounts are exempt from depreciation rate prescription by the Commission.

(f) Any changes in depreciation rates that are made under the provisions of paragraph (e) of this section shall not be construed as having been approved

by the Commission unless the carrier has been specifically so informed.

[28 FR 13214, Dec. 5, 1963, as amended at 30 FR 3223, Mar. 9, 1965; 53 FR 49987, Dec. 13, 1988; 58 FR 58790, Nov. 4, 1993; 61 FR 50246, Sept. 25, 1996; 62 FR 39779, July 24, 1997; 65 FR 18931, Apr. 10, 2000]

§ 43.51 Contracts and concessions.

(a)(1) Any communication common carrier described in paragraph (b) of this section must file with the Commission, within thirty (30) days of execution, a copy of each contract, agreement, concession, license, authorization, operating agreement or other arrangement to which it is a party and amendments thereto (collectively hereinafter referred to as ''agreement'' for purposes of this rule) with respect to the following:

(i) The exchange of services; and,

(ii) The interchange or routing of traffic and matters concerning rates, accounting rates, division of tolls, or the basis of settlement of traffic balances, except as provided in paragraph (c) of this section.

(2) If the contract, agreement, concession, license, authorization, operating agreement or other arrangement and amendments thereto is made other than in writing, a certified statement covering all details thereof must be filed by at least one of the parties to the agreement. Each other party to the agreement which is also subject to these provisions may, in lieu of also filing a copy of the agreement, file a certified statement referencing the filed document. The Commission may, at any time and upon reasonable request, require any communication common carrier not subject to the provisions of this section to submit the documents referenced in this section.

(b) The following communication common carriers must comply with the requirements of paragraph (a) of this section:

(1) A carrier that is engaged in domestic communications and has not been classified as non-dominant pursuant to § 61.3 of this Chapter; or

(2) A carrier that is engaged in foreign communications and that has been classified as dominant for any service on any of the U.S.-international routes included in the contract, except for a carrier classified as dominant on a particular route due only to a foreign carrier affiliation under § 63.10 of this chapter.

(c) With respect to contracts coming within the scope of paragraph (a)(1)(ii) of this section between subject telephone carriers and connecting carriers, except those contracts related to communications with foreign or overseas points, such documents shall not be filed with the Commission; but each subject telephone carrier shall maintain a copy of such contracts to which it is a party in appropriate files at a central location upon its premises, copies of which shall be readily accessible to Commission staff and members of the public upon reasonable request therefor; and upon request by the Commission, a subject telephone carrier shall promptly forward individual contracts to the Commission.

(d) Any U.S. carrier, other than a provider of commercial mobile radio services, that is engaged in foreign communications, and enters into an agreement with a foreign carrier, is subject to the Commission's authority to require the U.S. carrier providing service on any U.S.-international routes to file, on an as-needed basis, a copy of each agreement to which it is a party.

NOTE 1 TO § 43.51: For purposes of this section, *affiliated* and *foreign carrier* are defined in § 63.09 of this chapter.

NOTE 2 TO § 43.51: To the extent that a foreign government provides telecommunications services directly through a governmental organization, body or agency, it shall be treated as a foreign carrier for the purposes of this section.

[66 FR 16879, Mar. 28, 2001, as amended at 69 FR 23153, Apr. 28, 2004; 78 FR 11112, Feb. 15, 2013]

EFFECTIVE DATE NOTE: At 78 FR 11112, Feb. 15, 2013, § 43.51 was amended by revising paragraph (d). This paragraph (d) contains information collection and recordkeeping requirements and will not become effective until approval has been given by the Office of Management and Budget.

§ 43.61 Reports of international telecommunications traffic.

(a) Each common carrier engaged in providing international telecommunications service between the United

States (as defined in the Communications Act, as amended, 47 U.S.C. 153) and any country or point outside that area shall file a report with the Commission not later than July 31 of each year for service actually provided in the preceding calendar year.

(1) The information contained in the reports shall include actual traffic and revenue data for each and every service provided by a common carrier, divided among service billed in the United States, service billed outside the United States, and service transiting the United States.

(2) Each common carrier shall submit a revised report by October 31 identifying and correcting any inaccuracies included in the annual report exceeding five percent of the reported figure.

(3) The information required under this section shall be furnished in conformance with the instructions and reporting requirements prepared under the direction of the Chief, Wireline Competition Bureau, prepared and published as a manual, in consultation and coordination with the Chief, International Bureau.

(b) [Reserved]

[57 FR 8580, Mar. 11, 1992, as amended at 60 FR 5333, Jan. 27, 1995; 62 FR 5541, Feb. 6, 1997; 62 FR 45761, Aug. 29, 1997; 64 FR 19061, Apr. 19, 1999; 66 FR 67112, Dec. 28, 2001; 67 FR 13225, Mar. 21, 2002; 67 FR 45390, July 9, 2002; 76 FR 42573, July 19, 2011]

EFFECTIVE DATE NOTE: At 78 FR 15623, Mar. 12, 2013, § 43.61 was removed. This section contains information collection and recordkeeping requirements and will not become effective until approval has been given by the Office of Management and Budget.

§ 43.62 Reporting requirements for holders of international Section 214 authorizations and providers of international services.

(a) *Circuit Capacity Reports.* Not later than March 31 of each year:

(1) *Satellite and Terrestrial Circuits.* Each facilities-based common carrier shall file a report showing its active common carrier circuits between the United States and any foreign point as of December 31 of the preceding calendar year in any terrestrial or satellite facility for the provision of service to an end user or resale carrier, which includes active circuits used by themselves or their affiliates. Each non-common carrier satellite licensee shall file a report showing its active circuits between the United States and any foreign point as of December 31 of the preceding calendar sold or leased to any customer, including themselves or their affiliates, other than a carrier authorized by the Commission to provide U.S. international common carrier services.

(2) *International Submarine Cable Capacity*—(i) The licensee(s) of a submarine cable between the United States and any foreign point shall file a report showing the capacity of the submarine cable as of December 31 of the preceding calendar year. The licensee(s) shall also file a report showing the planned capacity of the submarine cable (the intended capacity of the submarine cable two years from December 31 of the preceding calendar year). Only one cable landing licensee shall file the capacity data for each submarine cable. For cables with more than one licensee, the licensees shall determine which licensee will file the reports.

(ii) Each cable landing licensee and common carrier shall file a report showing its capacity on submarine cables between the United States and any foreign point as of December 31 of the preceding calendar year.

(b) *Traffic and revenue reports.* (1) Not later than July 31 of each year, each person or entity that holds an authorization pursuant to section 214 to provide international telecommunications service shall report whether it provided international telecommunications services during the preceding calendar year.

(2) Not later than July 31 of each year, each common carrier engaged in providing international telecommunications service, and each person or entity engaged in providing Voice over Internet Protocol service connected to the public switched telephone network, between the United States and any foreign point shall file a report with the Commission showing revenues, payouts, and traffic for such international telecommunications service and Voice over Internet Protocol service connected to the public switched telephone network provided during the preceding calendar year.

(3) Entities filing such reports shall submit a revised report by October 31 identifying and correcting any inaccuracies included in the annual report exceeding one percent of the reported figure.

NOTE TO PARAGRAPHS (a) AND (b): United States is defined in section 3 of the Communications Act of 1934, as amended, 47 U.S.C. 153.

(c)(1) A Registration Form, containing information about the filer, such as address, phone number, email address, etc., shall be filed with each report filed pursuant to paragraphs (a) and (b).

(2) The Registration Form shall include a certification enabling the filer to check a box to indicate that the filer requests that its circuit capacity data or traffic and revenue data be treated as confidential. If a filer checks that box, the Commission shall treat the data contained in the accompanying report as confidential. Upon receipt of a request for inspection of such information, the Commission shall notify the filer; at that point, the filer must justify continued confidentiality of the information consistent with section 0.459(b) of the Commission's rules.

(d) *Filing Manual.* Authority is delegated to the Chief, International Bureau to prepare instructions and reporting requirements for the filing of these reports prepared and published as a Filing Manual. The information required under this section shall be furnished in conformance with the instructions and reporting requirements in the Filing Manual.

NOTE TO PARAGRAPH (d): The instructions and reporting requirements prepared by the Chief, International Bureau, shall be consistent with the terms of Reporting Requirements for U.S. Providers of International Telecommunications Services; Amendment of Part 43 of the Commission's Rules, IB Docket No. 04–112, Second Report and Order, FCC 13–6 (rel. January 15, 2013).

[78 FR 15623, Mar. 12, 2013]

EFFECTIVE DATE NOTE: At 78 FR 15623, Mar. 12, 2013, § 43.62 was added. This section contains information collection and recordkeeping requirements and will not become effective until approval has been given by the Office of Management and Budget.

§ 43.72 [Reserved]

§ 43.82 International circuit status reports.

(a) Each facilities-based common carrier engaged in providing international telecommunications service between the United States (as defined in the Communications Act, as amended, 47 U.S.C. 153) and any country or point outside that area shall file a circuit-status report with the Chief, International Bureau, not later than March 31 each year showing the status of its circuits used to provide international services as of December 31 of the preceding calendar year.

(b) The information contained in the reports shall include the total number of activated and the total number of idle circuits by the categories of submarine cable, satellite and terrestrial facilities to geographic points outside the United States for the services designated by the Chief, International Bureau.

(c) The information required under this section shall be furnished in conformance with instructions and reporting requirements prepared under the direction of the Chief, International Bureau, prepared and published as a manual.

(d) Authority is hereby delegated to the Chief, International Bureau to prepare instructions and reporting requirements for the filing of the annual international circuit status reports.

[60 FR 51368, Oct. 2, 1995, as amended at 76 FR 42573, July 19, 2011]

EFFECTIVE DATE NOTE: At 78 FR 15623, Mar. 12, 2013, § 43.82 was removed. This section contains information collection and recordkeeping requirements and will not become effective until approval has been given by the Office of Management and Budget.

PART 51—INTERCONNECTION

Subpart A—General Information

Sec.
51.1 Basis and purpose.
51.3 Applicability to negotiated agreements.
51.5 Terms and definitions.

Subpart B—Telecommunications Carriers

51.100 General duty.

Subpart C—Obligations of All Local Exchange Carriers

51.201 Resale.
51.203 Number portability.
51.205 Dialing parity: General.
51.207 Local dialing parity.
51.209 Toll dialing parity.
51.213 Toll dialing parity implementation plans.
51.215 Dialing parity: Cost recovery.
51.217 Nondiscriminatory access: Telephone numbers, operator services, directory assistance services, and directory listings.
51.219 Access to rights of way.
51.221 Reciprocal compensation.
51.223 Application of additional requirements.
51.230 Presumption of acceptability for deployment of an advanced services loop technology.
51.231 Provision of information on advanced services deployment.
51.232 Binder group management.
51.233 Significant degradation of services caused by deployment of advanced services.

Subpart D—Additional Obligations of Incumbent Local Exchange Carriers

51.301 Duty to negotiate.
51.303 Preexisting agreements.
51.305 Interconnection.
51.307 Duty to provide access on an unbundled basis to network elements.
51.309 Use of unbundled network elements.
51.311 Nondiscriminatory access to unbundled network elements.
51.313 Just, reasonable and nondiscriminatory terms and conditions for the provision of unbundled network elements.
51.315 Combination of unbundled network elements.
51.316 Conversion of unbundled network elements and services.
51.317 Standards for requiring the unbundling of network elements.
51.318 Eligibility criteria for access to certain unbundled network elements.
51.319 Specific unbundling requirements.
51.320 Assumption of responsibility by the Commission.
51.321 Methods of obtaining interconnection and access to unbundled elements under section 251 of the Act.
51.323 Standards for physical collocation and virtual collocation.
51.325 Notice of network changes: Public notice requirement.
51.327 Notice of network changes: Content of notice.
51.329 Notice of network changes: Methods for providing notice.
51.331 Notice of network changes: Timing of notice.
51.333 Notice of network changes: Short term notice, objections thereto and objections to retirement of copper loops or copper subloops.
51.335 Notice of network changes: Confidential or proprietary information.

Subpart E—Exemptions, Suspensions, and Modifications of Requirements of Section 251 of the Act

51.401 State authority.
51.403 Carriers eligible for suspension or modification under section 251(f)(2) of the Act.
51.405 Burden of proof.

Subpart F—Pricing of Elements

51.501 Scope.
51.503 General pricing standard.
51.505 Forward-looking economic cost.
51.507 General rate structure standard.
51.509 Rate structure standards for specific elements.
51.511 Forward-looking economic cost per unit.
51.513 Proxies for forward-looking economic cost.
51.515 Application of access charges.

Subpart G—Resale

51.601 Scope of resale rules.
51.603 Resale obligation of all local exchange carriers.
51.605 Additional obligations of incumbent local exchange carriers.
51.607 Wholesale pricing standard.
51.609 Determination of avoided retail costs.
51.611 Interim wholesale rates.
51.613 Restrictions on resale.
51.615 Withdrawal of services.
51.617 Assessment of end user common line charge on resellers.

Subpart H—Reciprocal Compensation for Transport and Termination of Telecommunications Traffic

51.700 Purpose of this subpart.
51.701 Scope of transport and termination pricing rules.
51.703 Non-Access reciprocal compensation obligation of LECs.
51.705 LECs' rates for transport and termination.
51.707 [Reserved]
51.709 Rate structure for transport and termination.
51.711 Symmetrical reciprocal compensation.
51.713 Bill-and-keep arrangements.
51.715 Interim transport and termination pricing.
51.717 [Reserved]

Subpart I—Procedures for Implementation of Section 252 of the Act

51.801 Commission action upon a state commission's failure to act to carry out its responsibility under section 252 of the Act.
51.803 Procedures for Commission notification of a state commission's failure to act.
51.805 The Commission's authority over proceedings and matters.
51.807 Arbitration and mediation of agreements by the Commission pursuant to section 252(e)(5) of the Act.
51.809 Availability of provisions of agreements to other telecommunications carriers under section 252(i) of the Act.

Subpart J—Transitional Access Service Pricing

51.901 Purpose and scope of transitional access service pricing rules.
51.903 Definitions.
51.905 Implementation.
51.907 Transition of price cap carrier access charges.
51.909 Transition of rate-of-return carrier access charges.
51.911 Access reciprocal compensation rates for competitive LECs.
51.913 Transition for VoIP-PSTN traffic.
51.915 Recovery mechanism for price cap carriers.
51.917 Revenue recovery for Rate of Return carriers.
51.919 Reporting and monitoring.

AUTHORITY: Sections 1–5, 7, 201–05, 207–09, 218, 220, 225–27, 251–54, 256, 271, 303(r), 332, 706 of the Telecommunication Act of 1996, 48 Stat. 1070, as amended, 1077; 47 U.S.C. 151–55, 157, 201–05, 207–09, 218, 220, 225–27, 251–54, 256, 271, 303(r), 332, 1302, 47 U.S.C. 157 *note*, unless otherwise noted.

SOURCE: 61 FR 45619, Aug. 29, 1996, unless otherwise noted.

Subpart A—General Information

§ 51.1 Basis and purpose.

(a) *Basis*. These rules are issued pursuant to the Communications Act of 1934, as amended.

(b) *Purpose*. The purpose of these rules is to implement sections 251 and 252 of the Communications Act of 1934, as amended, 47 U.S.C. 251 and 252.

§ 51.3 Applicability to negotiated agreements.

To the extent provided in section 252(e)(2)(A) of the Act, a state commission shall have authority to approve an interconnection agreement adopted by negotiation even if the terms of the agreement do not comply with the requirements of this part.

§ 51.5 Terms and definitions.

Terms used in this part have the following meanings:

Act. The Communications Act of 1934, as amended.

Advanced intelligent network. *Advanced intelligent network* is a telecommunications network architecture in which call processing, call routing, and network management are provided by means of centralized databases located at points in an incumbent local exchange carrier's network.

Advanced services. The term ''advanced services'' is defined as high speed, switched, broadband, wireline telecommunications capability that enables users to originate and receive high-quality voice, data, graphics or video telecommunications using any technology.

Arbitration, final offer. *Final offer arbitration* is a procedure under which each party submits a final offer concerning the issues subject to arbitration, and the arbitrator selects, without modification, one of the final offers by the parties to the arbitration or portions of both such offers. ''Entire package final offer arbitration,'' is a procedure under which the arbitrator must select, without modification, the entire proposal submitted by one of the parties to the arbitration. ''Issue-by-issue final offer arbitration,'' is a procedure under which the arbitrator must select, without modification, on an issue-by-issue basis, one of the proposals submitted by the parties to the arbitration.

Billing. *Billing* involves the provision of appropriate usage data by one telecommunications carrier to another to facilitate customer billing with attendant acknowledgements and status reports. It also involves the exchange of information between telecommunications carriers to process claims and adjustments.

Binder or binder group. Copper pairs bundled together, generally in groups of 25, 50 or 100.

Business line. A business line is an incumbent LEC-owned switched access

line used to serve a business customer, whether by the incumbent LEC itself or by a competitive LEC that leases the line from the incumbent LEC. The number of business lines in a wire center shall equal the sum of all incumbent LEC business switched access lines, plus the sum of all UNE loops connected to that wire center, including UNE loops provisioned in combination with other unbundled elements. Among these requirements, business line tallies:

(1) Shall include only those access lines connecting end-user customers with incumbent LEC end-offices for switched services,

(2) Shall not include non-switched special access lines,

(3) Shall account for ISDN and other digital access lines by counting each 64 kbps-equivalent as one line. For example, a DS1 line corresponds to 24 64 kbps-equivalents, and therefore to 24 ''business lines.''

Commercial Mobile Radio Service (CMRS). *CMRS* has the same meaning as that term is defined in §20.3 of this chapter.

Commingling. *Commingling* means the connecting, attaching, or otherwise linking of an unbundled network element, or a combination of unbundled network elements, to one or more facilities or services that a requesting telecommunications carrier has obtained at wholesale from an incumbent LEC, or the combining of an unbundled network element, or a combination of unbundled network elements, with one or more such facilities or services. *Commingle* means the act of commingling.

Commission. *Commission* refers to the Federal Communications Commission.

Day. *Day* means calendar day.

Dialing parity. The term *dialing parity* means that a person that is not an affiliate of a local exchange carrier is able to provide telecommunications services in such a manner that customers have the ability to route automatically, without the use of any access code, their telecommunications to the telecommunications service provider of the customer's designation from among 2 or more telecommunications service providers (including such local exchange carrier).

Directory assistance service. *Directory assistance service* includes, but is not limited to, making available to customers, upon request, information contained in directory listings.

Directory listings. *Directory listings* are any information:

(1) Identifying the listed names of subscribers of a telecommunications carrier and such subscriber's telephone numbers, addresses, or primary advertising classifications (as such classifications are assigned at the time of the establishment of such service), or any combination of such listed names, numbers, addresses or classifications; and

(2) That the telecommunications carrier or an affiliate has published, caused to be published, or accepted for publication in any directory format.

Downstream database. A *downstream database* is a database owned and operated by an individual carrier for the purpose of providing number portability in conjunction with other functions and services.

Enhanced extended link. An *enhanced extended link* or *EEL* consists of a combination of an unbundled loop and unbundled dedicated transport, together with any facilities, equipment, or functions necessary to combine those network elements.

Equipment necessary for interconnection or access to unbundled network elements. For purposes of section 251(c)(2) of the Act, the equipment used to interconnect with an incumbent local exchange carrier's network for the transmission and routing of telephone exchange service, exchange access service, or both. For the purposes of section 251(c)(3) of the Act, the equipment used to gain access to an incumbent local exchange carrier's unbundled network elements for the provision of a telecommunications service.

Fiber-based collocator. A fiber-based collocator is any carrier, unaffiliated with the incumbent LEC, that maintains a collocation arrangement in an incumbent LEC wire center, with active electrical power supply, and operates a fiber-optic cable or comparable transmission facility that

(1) Terminates at a collocation arrangement within the wire center;

(2) Leaves the incumbent LEC wire center premises; and

(3) Is owned by a party other than the incumbent LEC or any affiliate of the incumbent LEC, except as set forth in this paragraph. Dark fiber obtained from an incumbent LEC on an indefeasible right of use basis shall be treated as non-incumbent LEC fiber-optic cable. Two or more affiliated fiber-based collocators in a single wire center shall collectively be counted as a single fiber-based collocator. For purposes of this paragraph, the term affiliate is defined by 47 U.S.C. 153(1) and any relevant interpretation in this Title.

Incumbent Local Exchange Carrier (Incumbent LEC). With respect to an area, the local exchange carrier that:

(1) On February 8, 1996, provided telephone exchange service in such area; and

(2)(i) On February 8, 1996, was deemed to be a member of the exchange carrier association pursuant to § 69.601(b) of this chapter; or

(ii) Is a person or entity that, on or after February 8, 1996, became a successor or assign of a member described in paragraph (2)(i) of this section.

Information services. The term *information services* means the offering of a capability for generating, acquiring, storing, transforming, processing, retrieving, utilizing, or making available information via telecommunications, and includes electronic publishing, but does not include any use of any such capability for the management, control, or operation of a telecommunications system or the management of a telecommunications service.

Interconnection. *Interconnection* is the linking of two networks for the mutual exchange of traffic. This term does not include the transport and termination of traffic.

Known disturber. An advanced services technology that is prone to cause significant interference with other services deployed in the network.

Intermodal. The term intermodal refers to facilities or technologies other than those found in traditional telephone networks, but that are utilized to provide competing services. Intermodal facilities or technologies include, but are not limited to, traditional or new cable plant, wireless technologies, and power line technologies.

Local Access and Transport Area (LATA). A *Local Access and Transport Area* is a contiguous geographic area—

(1) Established before February 8, 1996 by a Bell operating company such that no exchange area includes points within more than 1 metropolitan statistical area, consolidated metropolitan statistical area, or State, except as expressly permitted under the AT&T Consent Decree; or

(2) Established or modified by a Bell operating company after February 8, 1996 and approved by the Commission.

Local Exchange Carrier (LEC). A *LEC* is any person that is engaged in the provision of telephone exchange service or exchange access. Such term does not include a person insofar as such person is engaged in the provision of a commercial mobile service under section 332(c) of the Act, except to the extent that the Commission finds that such service should be included in the definition of the such term.

Maintenance and repair. *Maintenance and repair* involves the exchange of information between telecommunications carriers where one initiates a request for maintenance or repair of existing products and services or unbundled network elements or combination thereof from the other with attendant acknowledgements and status reports.

Meet point. A *meet point* is a point of interconnection between two networks, designated by two telecommunications carriers, at which one carrier's responsibility for service begins and the other carrier's responsibility ends.

Meet point interconnection arrangement. A *meet point interconnection arrangement* is an arrangement by which each telecommunications carrier builds and maintains its network to a meet point.

Mobile wireless service. A mobile wireless service is any mobile wireless telecommunications service, including any commercial mobile radio service.

Multi-functional equipment. Multi-functional equipment is equipment that combines one or more functions that are necessary for interconnection

or access to unbundled network elements with one or more functions that would not meet that standard as standalone functions.

Network element. A *network element* is a facility or equipment used in the provision of a telecommunications service. Such term also includes, but is not limited to, features, functions, and capabilities that are provided by means of such facility or equipment, including but not limited to, subscriber numbers, databases, signaling systems, and information sufficient for billing and collection or used in the transmission, routing, or other provision of a telecommunications service.

Operator services. *Operator services* are any automatic or live assistance to a consumer to arrange for billing or completion of a telephone call. Such services include, but are not limited to, busy line verification, emergency interrupt, and operator-assisted directory assistance services.

Physical collocation. *Physical collocation* is an offering by an incumbent LEC that enables a requesting telecommunications carrier to:

(1) Place its own equipment to be used for interconnection or access to unbundled network elements within or upon an incumbent LEC's premises;

(2) Use such equipment to interconnect with an incumbent LEC's network facilities for the transmission and routing of telephone exchange service, exchange access service, or both, or to gain access to an incumbent LEC's unbundled network elements for the provision of a telecommunications service;

(3) Enter those premises, subject to reasonable terms and conditions, to install, maintain, and repair equipment necessary for interconnection or access to unbundled elements; and

(4) Obtain reasonable amounts of space in an incumbent LEC's premises, as provided in this part, for the equipment necessary for interconnection or access to unbundled elements, allocated on a first-come, first-served basis.

Premises. *Premises* refers to an incumbent LEC's central offices and serving wire centers; all buildings or similar structures owned, leased, or otherwise controlled by an incumbent LEC that house its network facilities; all structures that house incumbent LEC facilities on public rights-of-way, including but not limited to vaults containing loop concentrators or similar structures; and all land owned, leased, or otherwise controlled by an incumbent LEC that is adjacent to these central offices, wire centers, buildings, and structures.

Pre-ordering and ordering. Pre-ordering and ordering includes the exchange of information between telecommunications carriers about: current or proposed customer products and services; or unbundled network elements, or some combination thereof. This information includes loop qualification information, such as the composition of the loop material, including but not limited to: fiber optics or copper; the existence, location and type of any electronic or other equipment on the loop, including but not limited to, digital loop carrier or other remote concentration devices, feeder/distribution interfaces, bridge taps, load coils, pair-gain devices, disturbers in the same or adjacent binder groups; the loop length, including the length and location of each type of transmission media; the wire gauge(s) of the loop; and the electrical parameters of the loop, which may determine the suitability of the loop for various technologies.

Provisioning. *Provisioning* involves the exchange of information between telecommunications carriers where one executes a request for a set of products and services or unbundled network elements or combination thereof from the other with attendant acknowledgements and status reports.

Rural telephone company. A *rural telephone company* is a LEC operating entity to the extent that such entity:

(1) Provides common carrier service to any local exchange carrier study area that does not include either:

(i) Any incorporated place of 10,000 inhabitants or more, or any part thereof, based on the most recently available population statistics of the Bureau of the Census; or

(ii) Any territory, incorporated or unincorporated, included in an urbanized area, as defined by the Bureau of the Census as of August 10, 1993;

(2) Provides telephone exchange service, including exchange access, to fewer than 50,000 access lines;

(3) Provides telephone exchange service to any local exchange carrier study area with fewer than 100,000 access lines; or

(4) Has less than 15 percent of its access lines in communities of more than 50,000 on February 8, 1996.

Service control point. A *service control point* is a computer database in the public switched network which contains information and call processing instructions needed to process and complete a telephone call.

Service creation environment. A *service creation environment* is a computer containing generic call processing software that can be programmed to create new advanced intelligent network call processing services.

Service provider. A *service provider* is a provider of telecommunications services or a provider of information services.

Signal transfer point. A *signal transfer point* is a packet switch that acts as a routing hub for a signaling network and transfers messages between various points in and among signaling networks.

State. The term *state* includes the District of Columbia and the Territories and possessions.

State commission. A *state commission* means the commission, board, or official (by whatever name designated) which under the laws of any state has regulatory jurisdiction with respect to intrastate operations of carriers. As referenced in this part, this term may include the Commission if it assumes responsibility for a proceeding or matter, pursuant to section 252(e)(5) of the Act or § 51.320. This term shall also include any person or persons to whom the state commission has delegated its authority under sections 251 and 252 of the Act and this part.

State proceeding. A *state proceeding* is any administrative proceeding in which a state commission may approve or prescribe rates, terms, and conditions including, but not limited to, compulsory arbitration pursuant to section 252(b) of the Act, review of a Bell operating company statement of generally available terms pursuant to section 252(f) of the Act, and a proceeding to determine whether to approve or reject an agreement adopted by arbitration pursuant to section 252(e) of the Act.

Technically feasible. Interconnection, access to unbundled network elements, collocation, and other methods of achieving interconnection or access to unbundled network elements at a point in the network shall be deemed technically feasible absent technical or operational concerns that prevent the fulfillment of a request by a telecommunications carrier for such interconnection, access, or methods. A determination of technical feasibility does not include consideration of economic, accounting, billing, space, or site concerns, except that space and site concerns may be considered in circumstances where there is no possibility of expanding the space available. The fact that an incumbent LEC must modify its facilities or equipment to respond to such request does not determine whether satisfying such request is technically feasible. An incumbent LEC that claims that it cannot satisfy such request because of adverse network reliability impacts must prove to the state commission by clear and convincing evidence that such interconnection, access, or methods would result in specific and significant adverse network reliability impacts.

Telecommunications carrier. A *telecommunications carrier* is any provider of telecommunications services, except that such term does not include aggregators of telecommunications services (as defined in section 226 of the Act). A telecommunications carrier shall be treated as a common carrier under the Act only to the extent that it is engaged in providing telecommunications services, except that the Commission shall determine whether the provision of fixed and mobile satellite service shall be treated as common carriage. This definition includes CMRS providers, interexchange carriers (IXCs) and, to the extent they are acting as telecommunications carriers, companies that provide both telecommunications and information services. Private Mobile Radio Service providers are telecommunications carriers to the extent they provide domestic or

international telecommunications for a fee directly to the public.

Telecommunications service. The term *telecommunications service* refers to the offering of telecommunications for a fee directly to the public, or to such classes of users as to be effectively available directly to the public, regardless of the facilities used.

Telephone exchange service. A *telephone exchange service* is:

(1) A service within a telephone exchange, or within a connected system of telephone exchanges within the same exchange area operated to furnish to subscribers intercommunicating service of the character ordinarily furnished by a single exchange, and which is covered by the exchange service charge, or

(2) A comparable service provided through a system of switches, transmission equipment, or other facilities (or combination thereof) by which a subscriber can originate and terminate a telecommunications service.

Telephone toll service. The term *telephone toll service* refers to telephone service between stations in different exchange areas for which there is made a separate charge not included in contracts with subscribers for exchange service.

Unreasonable dialing delay. For the same type of calls, dialing delay is ''unreasonable'' when the dialing delay experienced by the customer of a competing provider is greater than that experienced by a customer of the LEC providing dialing parity, or nondiscriminatory access to operator services or directory assistance.

Triennial Review Order. The *Triennial Review Order* means the Commission's Report and Order and Order on Remand and Further Notice of Proposed Rulemaking in CC Docket Nos. 01–338, 96–98, and 98–147.

Triennial Review Remand Order. The Triennial Review Remand Order is the Commission's Order on Remand in CC Docket Nos. 01–338 and 04–313 (released February 4, 2005).

Virtual collocation. Virtual collocation is an offering by an incumbent LEC that enables a requesting telecommunications carrier to:

(1) Designate or specify equipment to be used for interconnection or access to unbundled network elements to be located within or upon an incumbent LEC's premises, and dedicated to such telecommunications carrier's use;

(2) Use such equipment to interconnect with an incumbent LEC's network facilities for the transmission and routing of telephone exchange service, exchange access service, or both, or for access to an incumbent LEC's unbundled network elements for the provision of a telecommunications service; and

(3) Electronically monitor and control its communications channels terminating in such equipment.

Wire center. A wire center is the location of an incumbent LEC local switching facility containing one or more central offices, as defined in the Appendix to part 36 of this chapter. The wire center boundaries define the area in which all customers served by a given wire center are located.

[61 FR 45619, Aug. 29, 1996, as amended at 61 FR 47348, Sept. 6, 1996; 64 FR 23241, Apr. 30, 1999; 65 FR 1344, Jan. 10, 2000; 65 FR 2550, Jan. 18, 2000; 65 FR 54438, Sept. 8, 2000; 66 FR 43521, Aug. 20, 2001; 68 FR 52293, Sept. 2, 2003; 70 FR 8952, Feb. 24, 2005]

Subpart B—Telecommunications Carriers

§ 51.100 General duty.

(a) Each telecommunications carrier has the duty:

(1) To interconnect directly or indirectly with the facilities and equipment of other telecommunications carriers; and

(2) To not install network features, functions, or capabilities that do not comply with the guidelines and standards as provided in the Commission's rules or section 255 or 256 of the Act.

(b) A telecommunication carrier that has interconnected or gained access under sections 251(a)(1), 251(c)(2), or 251(c)(3) of the Act, may offer information services through the same arrangement, so long as it is offering telecommunications services through the same arrangement as well.

Subpart C—Obligations of All Local Exchange Carriers

§ 51.201 Resale.

The rules governing resale of services by an incumbent LEC are set forth in subpart G of this part.

§ 51.203 Number portability.

The rules governing number portability are set forth in part 52, subpart C of this chapter.

§ 51.205 Dialing parity: General.

A local exchange carrier (LEC) shall provide local and toll dialing parity to competing providers of telephone exchange service or telephone toll service, with no unreasonable dialing delays. Dialing parity shall be provided for all originating telecommunications services that require dialing to route a call.

[61 FR 47349, Sept. 6, 1996]

§ 51.207 Local dialing parity.

A LEC shall permit telephone exchange service customers within a local calling area to dial the same number of digits to make a local telephone call notwithstanding the identity of the customer's or the called party's telecommunications service provider.

[61 FR 47349, Sept. 6, 1996]

§ 51.209 Toll dialing parity.

(a) A LEC shall implement throughout each state in which it offers telephone exchange service intraLATA and interLATA toll dialing parity based on LATA boundaries. When a single LATA covers more than one state, the LEC shall use the implementation procedures that each state has approved for the LEC within that state's borders.

(b) A LEC shall implement toll dialing parity through a presubscription process that permits a customer to select a carrier to which all designated calls on a customer's line will be routed automatically. LECs shall allow a customer to presubscribe, at a minimum, to one telecommunications carrier for all interLATA toll calls and to presubscribe to the same or to another telecommunications carrier for all intraLATA toll calls.

(c) A LEC may not assign automatically a customer's intraLATA toll traffic to itself, to its subsidiaries or affiliates, to the customer's presubscribed interLATA or interstate toll carrier, or to any other carrier, except when, in a state that already has implemented intrastate, intraLATA toll dialing parity, the subscriber has selected the same presubscribed carrier for both intraLATA and interLATA toll calls.

(d) Notwithstanding the requirements of paragraphs (a) and (b) of this section, states may require that toll dialing parity be based on state boundaries if it deems that the provision of intrastate and interstate toll dialing parity is procompetitive and otherwise in the public interest.

[61 FR 47349, Sept. 6, 1996]

§ 51.213 Toll dialing parity implementation plans.

(a) A LEC must file a plan for providing intraLATA toll dialing parity throughout each state in which it offers telephone exchange service. A LEC cannot offer intraLATA toll dialing parity within a state until the implementation plan has been approved by the appropriate state commission or the Commission.

(b) A LEC's implementation plan must include:

(1) A proposal that explains how the LEC will offer intraLATA toll dialing parity for each exchange that the LEC operates in the state, in accordance with the provisions of this section, and a proposed time schedule for implementation; and

(2) A proposal for timely notification of its subscribers and the methods it proposes to use to enable subscribers to affirmatively select an intraLATA toll service provider.

(3) A LEC that is not a BOC also shall identify the LATA with which it will associate for the purposes of providing intraLATA and interLATA toll dialing parity under this subpart.

[61 FR 47349, Sept. 6, 1996, as amended at 71 FR 65750, Nov. 9, 2006]

§ 51.215 Dialing parity: Cost recovery.

(a) A LEC may recover the incremental costs necessary for the implementation of toll dialing parity. The LEC must recover such costs from all providers of telephone exchange service and telephone toll service in the area served by the LEC, including that LEC. The LEC shall use a cost recovery mechanism established by the state.

(b) Any cost recovery mechanism for the provision of toll dialing parity pursuant to this section that a state adopts must not:

(1) Give one service provider an appreciable cost advantage over another service provider, when competing for a specific subscriber (*i.e.*, the recovery mechanism may not have a disparate effect on the incremental costs of competing service providers seeking to serve the same customer); or

(2) Have a disparate effect on the ability of competing service providers to earn a normal return on their investment.

[61 FR 47350, Sept. 6, 1996]

§ 51.217 Nondiscriminatory access: Telephone numbers, operator services, directory assistance services, and directory listings.

(a) *Definitions*. As used in this section, the following definitions apply:

(1) *Competing provider*. A ''competing provider'' is a provider of telephone exchange or telephone toll services that seeks nondiscriminatory access from a local exchange carrier (LEC) in that LEC's service area.

(2) *Nondiscriminatory access*. ''Nondiscriminatory access'' refers to access to telephone numbers, operator services, directory assistance and directory listings that is at least equal to the access that the providing local exchange carrier (LEC) itself receives. Nondiscriminatory access includes, but is not limited to:

(i) Nondiscrimination between and among carriers in the rates, terms, and conditions of the access provided; and

(ii) The ability of the competing provider to obtain access that is at least equal in quality to that of the providing LEC.

(3) *Providing local exchange carrier* (LEC). A ''providing local exchange carrier'' is a local exchange carrier (LEC) that is required to permit nondiscriminatory access to a competing provider.

(b) *General rule*. A local exchange carrier (LEC) that provides operator services, directory assistance services or directory listings to its customers, or provides telephone numbers, shall permit competing providers of telephone exchange service or telephone toll service to have nondiscriminatory access to that service or feature, with no unreasonable dialing delays.

(c) *Specific requirements*. A LEC subject to paragraph (b) of this section must also comply with the following requirements:

(1) *Telephone numbers*. A LEC shall permit competing providers to have access to telephone numbers that is identical to the access that the LEC provides to itself.

(2) *Operator services*. A LEC must permit telephone service customers to connect to the operator services offered by that customer's chosen local service provider by dialing ''0,'' or ''0'' plus the desired telephone number, regardless of the identity of the customer's local telephone service provider.

(3) *Directory assistance services and directory listings*—(i) *Access to directory assistance*. A LEC shall permit competing providers to have access to its directory assistance services, including directory assistance databases, so that any customer of a competing provider can obtain directory listings, except as provided in paragraph (c)(3)(iv) of this section, on a nondiscriminatory basis, notwithstanding the identity of the customer's local service provider, or the identity of the provider for the customer whose listing is requested. A LEC must supply access to directory assistance in the manner specified by the competing provider, including transfer of the LECs' directory assistance databases in readily accessible magnetic tape, electronic or other convenient format, as provided in paragraph (c)(3)(iii) of this section. Updates to the directory assistance database shall be made in the same format as the initial transfer (unless the requesting LEC requests otherwise), and shall be performed in a timely manner, taking no longer than those made to the

providing LEC's own database. A LEC shall accept the listings of those customers served by competing providers for inclusion in its directory assistance/operator services databases.

(ii) *Access to directory listings.* A LEC that compiles directory listings shall share directory listings with competing providers in the manner specified by the competing provider, including readily accessible tape or electronic formats, as provided in paragraph (c)(3)(iii) of this section. Such data shall be provided in a timely fashion.

(iii) *Format.* A LEC shall provide access to its directory assistance services, including directory assistance databases, and to its directory listings in any format the competing provider specifies, if the LEC's internal systems can accommodate that format.

(A) If a LEC's internal systems do not permit it provide directory assistance or directory listings in the format the specified by the competing provider, the LEC shall:

(*1*) Within thirty days of receiving the request, inform the competing provider that the requested format cannot be accommodated and tell the requesting provider which formats can be accommodated; and

(*2*) Provide the requested directory assistance or directory listings in the format the competing provider chooses from among the available formats.

(B) [Reserved]

(iv) *Unlisted numbers.* A LEC shall not provide access to unlisted telephone numbers, or other information that its customer has asked the LEC not to make available, with the exception of customer name and address. The LEC shall ensure that access is permitted to the same directory information, including customer name and address, that is available to its own directory assistance customers.

(v) *Adjuncts to services.* Operator services and directory assistance services must be made available to competing providers in their entirety, including access to any adjunct features (e.g., rating tables or customer information databases) necessary to allow competing providers full use of these services.

(d) *Branding of operator services and directory assistance services.* The refusal of a providing local exchange carrier (LEC) to comply with the reasonable request of a competing provider that the providing LEC rebrand its operator services and directory assistance, or remove its brand from such services, creates a presumption that the providing LEC is unlawfully restricting access to its operator services and directory assistance. The providing LEC can rebut this presumption by demonstrating that it lacks the capability to comply with the competing provider's request.

(e) *Disputes*—(1) *Disputes involving nondiscriminatory access.* In disputes involving nondiscriminatory access to operator services, directory assistance services, or directory listings, a providing LEC shall bear the burden of demonstrating with specificity:

(i) That it is permitting nondiscriminatory access, and

(ii) That any disparity in access is not caused by factors within its control. ''Factors within its control'' include, but are not limited to, physical facilities, staffing, the ordering of supplies or equipment, and maintenance.

(2) *Disputes involving unreasonable dialing delay.* In disputes between providing local exchange carriers (LECs) and competing providers involving unreasonable dialing delay in the provision of access to operator services and directory assistance, the burden of proof is on the providing LEC to demonstrate with specificity that it is processing the calls of the competing provider's customers on terms equal to that of similar calls from the providing LEC's own customers.

[61 FR 47350, Sept. 6, 1996, as amended at 64 FR 51911, Sept. 27, 1999]

§ 51.219 Access to rights of way.

The rules governing access to rights of way are set forth in part 1, subpart J of this chapter.

§ 51.221 Reciprocal compensation.

The rules governing reciprocal compensation are set forth in subpart H of this part.

§ 51.223 Application of additional requirements.

(a) A state may not impose the obligations set forth in section 251(c) of the Act on a LEC that is not classified as

an incumbent LEC as defined in section 251(h)(1) of the Act, unless the Commission issues an order declaring that such LECs or classes or categories of LECs should be treated as incumbent LECs.

(b) A state commission, or any other interested party, may request that the Commission issue an order declaring that a particular LEC be treated as an incumbent LEC, or that a class or category of LECs be treated as incumbent LECs, pursuant to section 251(h)(2) of the Act.

§ 51.230 Presumption of acceptability for deployment of an advanced services loop technology.

(a) An advanced services loop technology is presumed acceptable for deployment under any one of the following circumstances, where the technology:

(1) Complies with existing industry standards; or

(2) Is approved by an industry standards body, the Commission, or any state commission; or

(3) Has been successfully deployed by any carrier without significantly degrading the performance of other services.

(b) An incumbent LEC may not deny a carrier's request to deploy a technology that is presumed acceptable for deployment unless the incumbent LEC demonstrates to the relevant state commission that deployment of the particular technology will significantly degrade the performance of other advanced services or traditional voiceband services.

(c) Where a carrier seeks to establish that deployment of a technology falls within the presumption of acceptability under paragraph (a)(3) of this section, the burden is on the requesting carrier to demonstrate to the state commission that its proposed deployment meets the threshold for a presumption of acceptability and will not, in fact, significantly degrade the performance of other advanced services or traditional voice band services. Upon a successful demonstration by the requesting carrier before a particular state commission, the deployed technology shall be presumed acceptable for deployment in other areas.

[65 FR 1345, Jan. 10, 2000]

§ 51.231 Provision of information on advanced services deployment.

(a) An incumbent LEC must provide to requesting carriers that seek access to a loop or high frequency portion of the loop to provide advanced services:

(1) Uses in determining which services can be deployed; and information with respect to the spectrum management procedures and policies that the incumbent LEC.

(2) Information with respect to the rejection of the requesting carrier's provision of advanced services, together with the specific reason for the rejection; and

(3) Information with respect to the number of loops using advanced services technology within the binder and type of technology deployed on those loops.

(b) A requesting carrier that seeks access to a loop or a high frequency portion of a loop to provide advanced services must provide to the incumbent LEC information on the type of technology that the requesting carrier seeks to deploy.

(1) Where the requesting carrier asserts that the technology it seeks to deploy fits within a generic power spectral density (PSD) mask, it also must provide Spectrum Class information for the technology.

(2) Where a requesting carrier relies on a calculation-based approach to support deployment of a particular technology, it must provide the incumbent LEC with information on the speed and power at which the signal will be transmitted.

(c) The requesting carrier also must provide the information required under paragraph (b) of this section when notifying the incumbent LEC of any proposed change in advanced services technology that the carrier uses on the loop.

[65 FR 1345, Jan. 10, 2000]

§ 51.232 Binder group management.

(a) With the exception of loops on which a known disturber is deployed, the incumbent LEC shall be prohibited from designating, segregating or reserving particular loops or binder groups for use solely by any particular advanced services loop technology.

(b) Any party seeking designation of a technology as a known disturber should file a petition for declaratory ruling with the Commission seeking such designation, pursuant to §1.2 of this chapter.

[65 FR 1346, Jan. 10, 2000]

§ 51.233 Significant degradation of services caused by deployment of advanced services.

(a) Where a carrier claims that a deployed advanced service is significantly degrading the performance of other advanced services or traditional voiceband services, that carrier must notify the deploying carrier and allow the deploying carrier a reasonable opportunity to correct the problem. Where the carrier whose services are being degraded does not know the precise cause of the degradation, it must notify each carrier that may have caused or contributed to the degradation.

(b) Where the degradation asserted under paragraph (a) of this section remains unresolved by the deploying carrier(s) after a reasonable opportunity to correct the problem, the carrier whose services are being degraded must establish before the relevant state commission that a particular technology deployment is causing the significant degradation.

(c) Any claims of network harm presented to the deploying carrier(s) or, if subsequently necessary, the relevant state commission, must be supported with specific and verifiable information.

(d) Where a carrier demonstrates that a deployed technology is significantly degrading the performance of other advanced services or traditional voice band services, the carrier deploying the technology shall discontinue deployment of that technology and migrate its customers to technologies that will not significantly degrade the performance of other such services.

(e) Where the only degraded service itself is a known disturber, and the newly deployed technology satisfies at least one of the criteria for a presumption that it is acceptable for deployment under §51.230, the degraded service shall not prevail against the newly-deployed technology.

[65 FR 1346, Jan. 10, 2000]

Subpart D—Additional Obligations of Incumbent Local Exchange Carriers

§ 51.301 Duty to negotiate.

(a) An incumbent LEC shall negotiate in good faith the terms and conditions of agreements to fulfill the duties established by sections 251 (b) and (c) of the Act.

(b) A requesting telecommunications carrier shall negotiate in good faith the terms and conditions of agreements described in paragraph (a) of this section.

(c) If proven to the Commission, an appropriate state commission, or a court of competent jurisdiction, the following actions or practices, among others, violate the duty to negotiate in good faith:

(1) Demanding that another party sign a nondisclosure agreement that precludes such party from providing information requested by the Commission, or a state commission, or in support of a request for arbitration under section 252(b)(2)(B) of the Act;

(2) Demanding that a requesting telecommunications carrier attest that an agreement complies with all provisions of the Act, federal regulations, or state law;

(3) Refusing to include in an arbitrated or negotiated agreement a provision that permits the agreement to be amended in the future to take into account changes in Commission or state rules;

(4) Conditioning negotiation on a requesting telecommunications carrier first obtaining state certifications;

(5) Intentionally misleading or coercing another party into reaching an agreement that it would not otherwise have made;

(6) Intentionally obstructing or delaying negotiations or resolutions of disputes;

(7) Refusing throughout the negotiation process to designate a representative with authority to make binding representations, if such refusal significantly delays resolution of issues; and

(8) Refusing to provide information necessary to reach agreement. Such refusal includes, but is not limited to:

(i) Refusal by an incumbent LEC to furnish information about its network that a requesting telecommunications carrier reasonably requires to identify the network elements that it needs in order to serve a particular customer; and

(ii) Refusal by an incumbent LEC to furnish cost data that would be relevant to setting rates if the parties were in arbitration.

[61 FR 45619, Aug. 29, 1996, as amended at 68 FR 52294, Sept. 2, 2003]

§ 51.303 Preexisting agreements.

(a) All interconnection agreements between an incumbent LEC and a telecommunications carrier, including those negotiated before February 8, 1996, shall be submitted by the parties to the appropriate state commission for approval pursuant to section 252(e) of the Act.

(b) Interconnection agreements negotiated before February 8, 1996, between Class A carriers, as defined by § 32.11(a)(1) of this chapter, shall be filed by the parties with the appropriate state commission no later than June 30, 1997, or such earlier date as the state commission may require.

(c) If a state commission approves a preexisting agreement, it shall be made available to other parties in accordance with section 252(i) of the Act and § 51.809 of this part. A state commission may reject a preexisting agreement on the grounds that it is inconsistent with the public interest, or for other reasons set forth in section 252(e)(2)(A) of the Act.

§ 51.305 Interconnection.

(a) An incumbent LEC shall provide, for the facilities and equipment of any requesting telecommunications carrier, interconnection with the incumbent LEC's network:

(1) For the transmission and routing of telephone exchange traffic, exchange access traffic, or both;

(2) At any technically feasible point within the incumbent LEC's network including, at a minimum:

(i) The line-side of a local switch;

(ii) The trunk-side of a local switch;

(iii) The trunk interconnection points for a tandem switch;

(iv) Central office cross-connect points;

(v) Out-of-band signaling transfer points necessary to exchange traffic at these points and access call-related databases; and

(vi) The points of access to unbundled network elements as described in § 51.319;

(3) That is at a level of quality that is equal to that which the incumbent LEC provides itself, a subsidiary, an affiliate, or any other party. At a minimum, this requires an incumbent LEC to design interconnection facilities to meet the same technical criteria and service standards that are used within the incumbent LEC's network. This obligation is not limited to a consideration of service quality as perceived by end users, and includes, but is not limited to, service quality as perceived by the requesting telecommunications carrier; and

(4) On terms and conditions that are just, reasonable, and nondiscriminatory in accordance with the terms and conditions of any agreement, the requirements of sections 251 and 252 of the Act, and the Commission's rules including, but not limited to, offering such terms and conditions equally to all requesting telecommunications carriers, and offering such terms and conditions that are no less favorable than the terms and conditions upon which the incumbent LEC provides such interconnection to itself. This includes, but is not limited to, the time within which the incumbent LEC provides such interconnection.

(b) A carrier that requests interconnection solely for the purpose of originating or terminating its interexchange traffic on an incumbent LEC's network and not for the purpose of providing to others telephone exchange service, exchange access service, or both, is not entitled to receive interconnection pursuant to section 251(c)(2) of the Act.

(c) Previous successful interconnection at a particular point in a network, using particular facilities, constitutes substantial evidence that interconnection is technically feasible at that point, or at substantially similar

points, in networks employing substantially similar facilities. Adherence to the same interface or protocol standards shall constitute evidence of the substantial similarity of network facilities.

(d) Previous successful interconnection at a particular point in a network at a particular level of quality constitutes substantial evidence that interconnection is technically feasible at that point, or at substantially similar points, at that level of quality.

(e) An incumbent LEC that denies a request for interconnection at a particular point must prove to the state commission that interconnection at that point is not technically feasible.

(f) If technically feasible, an incumbent LEC shall provide two-way trunking upon request.

(g) An incumbent LEC shall provide to a requesting telecommunications carrier technical information about the incumbent LEC's network facilities sufficient to allow the requesting carrier to achieve interconnection consistent with the requirements of this section.

[61 FR 45619, Aug. 29, 1996, as amended at 61 FR 47351, Sept. 6, 1996; 68 FR 52294, Sept. 2, 2003]

§ 51.307 Duty to provide access on an unbundled basis to network elements.

(a) An incumbent LEC shall provide, to a requesting telecommunications carrier for the provision of a telecommunications service, nondiscriminatory access to network elements on an unbundled basis at any technically feasible point on terms and conditions that are just, reasonable, and nondiscriminatory in accordance with the terms and conditions of any agreement, the requirements of sections 251 and 252 of the Act, and the Commission's rules.

(b) The duty to provide access to unbundled network elements pursuant to section 251(c)(3) of the Act includes a duty to provide a connection to an unbundled network element independent of any duty to provide interconnection pursuant to this part and section 251(c)(2) of the Act.

(c) An incumbent LEC shall provide a requesting telecommunications carrier access to an unbundled network element, along with all of the unbundled network element's features, functions, and capabilities, in a manner that allows the requesting telecommunications carrier to provide any telecommunications service that can be offered by means of that network element.

(d) An incumbent LEC shall provide a requesting telecommunications carrier access to the facility or functionality of a requested network element separate from access to the facility or functionality of other network elements, for a separate charge.

(e) An incumbent LEC shall provide to a requesting telecommunications carrier technical information about the incumbent LEC's network facilities sufficient to allow the requesting carrier to achieve access to unbundled network elements consistent with the requirements of this section.

[61 FR 45619, Aug. 29, 1996, as amended at 61 FR 47351, Sept. 6, 1996]

§ 51.309 Use of unbundled network elements.

(a) Except as provided in § 51.318, an incumbent LEC shall not impose limitations, restrictions, or requirements on requests for, or the use of, unbundled network elements for the service a requesting telecommunications carrier seeks to offer.

(b) A requesting telecommunications carrier may not access an unbundled network element for the exclusive provision of mobile wireless services or interexchange services.

(c) A telecommunications carrier purchasing access to an unbundled network facility is entitled to exclusive use of that facility for a period of time, or when purchasing access to a feature, function, or capability of a facility, a telecommunications carrier is entitled to use of that feature, function, or capability for a period of time. A telecommunications carrier's purchase of access to an unbundled network element does not relieve the incumbent LEC of the duty to maintain, repair, or replace the unbundled network element.

(d) A requesting telecommunications carrier that accesses and uses an unbundled network element consistent

with paragraph (b) of this section may provide any telecommunications services over the same unbundled network element.

(e) Except as provided in § 51.318, an incumbent LEC shall permit a requesting telecommunications carrier to commingle an unbundled network element or a combination of unbundled network elements with wholesale services obtained from an incumbent LEC.

(f) Upon request, an incumbent LEC shall perform the functions necessary to commingle an unbundled network element or a combination of unbundled network elements with one or more facilities or services that a requesting telecommunications carrier has obtained at wholesale from an incumbent LEC.

(g) An incumbent LEC shall not deny access to an unbundled network element or a combination of unbundled network elements on the grounds that one or more of the elements:

(1) Is connected to, attached to, linked to, or combined with, a facility or service obtained from an incumbent LEC; or

(2) Shares part of the incumbent LEC's network with access services or inputs for mobile wireless services and/or interexchange services.

[61 FR 45619, Aug. 29, 1996, as amended at 68 FR 52294, Sept. 2, 2003; 70 FR 8952, Feb. 24, 2005]

§ 51.311 Nondiscriminatory access to unbundled network elements.

(a) The quality of an unbundled network element, as well as the quality of the access to the unbundled network element, that an incumbent LEC provides to a requesting telecommunications carrier shall be the same for all telecommunications carriers requesting access to that network element.

(b) To the extent technically feasible, the quality of an unbundled network element, as well as the quality of the access to such unbundled network element, that an incumbent LEC provides to a requesting telecommunications carrier shall be at least equal in quality to that which the incumbent LEC provides to itself. If an incumbent LEC fails to meet this requirement, the incumbent LEC must prove to the state commission that it is not technically feasible to provide the requested unbundled network element, or to provide access to the requested unbundled network element, at a level of quality that is equal to that which the incumbent LEC provides to itself.

(c) Previous successful access to an unbundled element at a particular point in a network, using particular facilities, is substantial evidence that access is technically feasible at that point, or at substantially similar points, in networks employing substantially similar facilities. Adherence to the same interface or protocol standards shall constitute evidence of the substantial similarity of network facilities.

(d) Previous successful provision of access to an unbundled element at a particular point in a network at a particular level of quality is substantial evidence that access is technically feasible at that point, or at substantially similar points, at that level of quality.

[61 FR 45619, Aug. 29, 1996, as amended at 68 FR 52294, Sept. 2, 2003]

§ 51.313 Just, reasonable and nondiscriminatory terms and conditions for the provision of unbundled network elements.

(a) The terms and conditions pursuant to which an incumbent LEC provides access to unbundled network elements shall be offered equally to all requesting telecommunications carriers.

(b) Where applicable, the terms and conditions pursuant to which an incumbent LEC offers to provide access to unbundled network elements, including but not limited to, the time within which the incumbent LEC provisions such access to unbundled network elements, shall, at a minimum, be no less favorable to the requesting carrier than the terms and conditions under which the incumbent LEC provides such elements to itself.

(c) An incumbent LEC must provide a carrier purchasing access to unbundled network elements with the pre-ordering, ordering, provisioning, maintenance and repair, and billing functions of the incumbent LEC's operations support systems.

§ 51.315 Combination of unbundled network elements.

(a) An incumbent LEC shall provide unbundled network elements in a manner that allows requesting telecommunications carriers to combine such network elements in order to provide a telecommunications service.

(b) Except upon request, an incumbent LEC shall not separate requested network elements that the incumbent LEC currently combines.

(c) Upon request, an incumbent LEC shall perform the functions necessary to combine unbundled network elements in any manner, even if those elements are not ordinarily combined in the incumbent LEC's network, provided that such combination:

(1) Is technically feasible; and

(2) Would not undermine the ability of other carriers to obtain access to unbundled network elements or to interconnect with the incumbent LEC's network.

(d) Upon request, an incumbent LEC shall perform the functions necessary to combine unbundled network elements with elements possessed by the requesting telecommunications carrier in any technically feasible manner.

(e) An incumbent LEC that denies a request to combine elements pursuant to paragraph (c)(1) or paragraph (d) of this section must prove to the state commission that the requested combination is not technically feasible.

(f) An incumbent LEC that denies a request to combine unbundled network elements pursuant to paragraph (c)(2) of this section must demonstrate to the state commission that the requested combination would undermine the ability of other carriers to obtain access to unbundled network elements or to interconnect with the incumbent LEC's network.

[61 FR 45619, Aug. 29, 1996, as amended at 68 FR 52294, Sept. 2, 2003]

§ 51.316 Conversion of unbundled network elements and services.

(a) Upon request, an incumbent LEC shall convert a wholesale service, or group of wholesale services, to the equivalent unbundled network element, or combination of unbundled network elements, that is available to the requesting telecommunications carrier under section 251(c)(3) of the Act and this part.

(b) An incumbent LEC shall perform any conversion from a wholesale service or group of wholesale services to an unbundled network element or combination of unbundled network elements without adversely affecting the service quality perceived by the requesting telecommunications carrier's end-user customer.

(c) Except as agreed to by the parties, an incumbent LEC shall not impose any untariffed termination charges, or any disconnect fees, re-connect fees, or charges associated with establishing a service for the first time, in connection with any conversion between a wholesale service or group of wholesale services and an unbundled network element or combination of unbundled network elements.

[68 FR 52294, Sept. 2, 2003]

§ 51.317 Standards for requiring the unbundling of network elements.

(a) *Proprietary network elements.* A network element shall be considered to be proprietary if an incumbent LEC can demonstrate that it has invested resources to develop proprietary information or functionalities that are protected by patent, copyright or trade secret law. The Commission shall undertake the following analysis to determine whether a proprietary network element should be made available for purposes of section 251(c)(3) of the Act:

(1) Determine whether access to the proprietary network element is ''necessary.'' A network element is ''necessary'' if, taking into consideration the availability of alternative elements outside the incumbent LEC's network, including self-provisioning by a requesting telecommunications carrier or acquiring an alternative from a third-party supplier, lack of access to the network element precludes a requesting telecommunications carrier from providing the services that it seeks to offer. If access is ''necessary,'' the Commission may require the unbundling of such proprietary network element.

(2) In the event that such access is not ''necessary,'' the Commission may

require unbundling if it is determined that:

(i) The incumbent LEC has implemented only a minor modification to the network element in order to qualify for proprietary treatment;

(ii) The information or functionality that is proprietary in nature does not differentiate the incumbent LEC's services from the requesting telecommunications carrier's services; or

(iii) Lack of access to such element would jeopardize the goals of the Act.

(b) *Non-proprietary network elements.* The Commission shall determine whether a non-proprietary network element should be made available for purposes of section 251(c)(3) of the Act by analyzing, at a minimum, whether lack of access to a non-proprietary network element ''impairs'' a requesting carrier's ability to provide the service it seeks to offer. A requesting carrier's ability to provide service is ''impaired'' if, taking into consideration the availability of alternative elements outside the incumbent LEC's network, including elements self-provisioned by the requesting carrier or acquired as an alternative from a third-party supplier, lack of access to that element poses a barrier or barriers to entry, including operational and economic barriers, that are likely to make entry into a market by a reasonably efficient competitor uneconomic.

[70 FR 8952, Feb. 24, 2005]

§ 51.318 Eligibility criteria for access to certain unbundled network elements.

(a) Except as provided in paragraph (b) of this section, an incumbent LEC shall provide access to unbundled network elements and combinations of unbundled network elements without regard to whether the requesting telecommunications carrier seeks access to the elements to establish a new circuit or to convert an existing circuit from a service to unbundled network elements.

(b) An incumbent LEC need not provide access to an unbundled DS1 loop in combination, or commingled, with a dedicated DS1 transport or dedicated DS3 transport facility or service, or to an unbundled DS3 loop in combination, or commingled, with a dedicated DS3 transport facility or service, or an unbundled dedicated DS1 transport facility in combination, or commingled, with an unbundled DS1 loop or a DS1 channel termination service, or to an unbundled dedicated DS3 transport facility in combination, or commingled, with an unbundled DS1 loop or a DS1 channel termination service, or to an unbundled DS3 loop or a DS3 channel termination service, unless the requesting telecommunications carrier certifies that all of the following conditions are met:

(1) The requesting telecommunications carrier has received state certification to provide local voice service in the area being served or, in the absence of a state certification requirement, has complied with registration, tariffing, filing fee, or other regulatory requirements applicable to the provision of local voice service in that area.

(2) The following criteria are satisfied for each combined circuit, including each DS1 circuit, each DS1 enhanced extended link, and each DS1-equivalent circuit on a DS3 enhanced extended link:

(i) Each circuit to be provided to each customer will be assigned a local number prior to the provision of service over that circuit;

(ii) Each DS1-equivalent circuit on a DS3 enhanced extended link must have its own local number assignment, so that each DS3 must have at least 28 local voice numbers assigned to it;

(iii) Each circuit to be provided to each customer will have 911 or E911 capability prior to the provision of service over that circuit;

(iv) Each circuit to be provided to each customer will terminate in a collocation arrangement that meets the requirements of paragraph (c) of this section;

(v) Each circuit to be provided to each customer will be served by an interconnection trunk that meets the requirements of paragraph (d) of this section;

(vi) For each 24 DS1 enhanced extended links or other facilities having equivalent capacity, the requesting telecommunications carrier will have at least one active DS1 local service interconnection trunk that meets the

requirements of paragraph (d) of this section; and

(vii) Each circuit to be provided to each customer will be served by a switch capable of switching local voice traffic.

(c) A collocation arrangement meets the requirements of this paragraph if it is:

(1) Established pursuant to section 251(c)(6) of the Act and located at an incumbent LEC premises within the same LATA as the customer's premises, when the incumbent LEC is not the collocator; and

(2) Located at a third party's premises within the same LATA as the customer's premises, when the incumbent LEC is the collocator.

(d) An interconnection trunk meets the requirements of this paragraph if the requesting telecommunications carrier will transmit the calling party's number in connection with calls exchanged over the trunk.

[68 FR 52295, Sept. 2, 2003, as amended at 68 FR 64000, Nov. 12, 2003]

§ 51.319 Specific unbundling requirements.

(a) *Local loops.* An incumbent LEC shall provide a requesting telecommunications carrier with nondiscriminatory access to the local loop on an unbundled basis, in accordance with section 251(c)(3) of the Act and this part and as set forth in paragraphs (a)(1) through (8) of this section. The local loop network element is defined as a transmission facility between a distribution frame (or its equivalent) in an incumbent LEC central office and the loop demarcation point at an end-user customer premises. This element includes all features, functions, and capabilities of such transmission facility, including the network interface device. It also includes all electronics, optronics, and intermediate devices (including repeaters and load coils) used to establish the transmission path to the end-user customer premises as well as any inside wire owned or controlled by the incumbent LEC that is part of that transmission path.

(1) *Copper loops.* An incumbent LEC shall provide a requesting telecommunications carrier with nondiscriminatory access to the copper loop on an unbundled basis. A copper loop is a stand-alone local loop comprised entirely of copper wire or cable. Copper loops include two-wire and four-wire analog voice-grade copper loops, digital copper loops (*e.g.*, DS0s and integrated services digital network lines), as well as two-wire and four-wire copper loops conditioned to transmit the digital signals needed to provide digital subscriber line services, regardless of whether the copper loops are in service or held as spares. The copper loop includes attached electronics using time division multiplexing technology, but does not include packet switching capabilities as defined in paragraph (a)(2)(i) of this section. The availability of DS1 and DS3 copper loops is subject to the requirements of paragraphs (a)(4) and (5) of this section.

(i) *Line splitting.* An incumbent LEC shall provide a requesting telecommunications carrier that obtains an unbundled copper loop from the incumbent LEC with the ability to engage in line splitting arrangements with another competitive LEC using a splitter collocated at the central office where the loop terminates into a distribution frame or its equivalent. Line splitting is the process in which one competitive LEC provides narrowband voice service over the low frequency portion of a copper loop and a second competitive LEC provides digital subscriber line service over the high frequency portion of that same loop. The high frequency portion of the loop consists of the frequency range on the copper loop above the range that carries analog circuit-switched voice transmissions. This portion of the loop includes the features, functions, and capabilities of the loop that are used to establish a complete transmission path on the high frequency range between the incumbent LEC's distribution frame (or its equivalent) in its central office and the demarcation point at the end-user customer premises, and includes the high frequency portion of any inside wire owned or controlled by the incumbent LEC.

(A) An incumbent LEC's obligation, under paragraph (a)(1)(i) of this section, to provide a requesting telecommunications carrier with the ability to engage in line splitting applies regardless of whether the carrier providing voice service provides its own switching or obtains local circuit switching from the incumbent LEC.

(B) An incumbent LEC must make all necessary network modifications, including providing nondiscriminatory access to operations support systems necessary for pre-ordering, ordering, provisioning, maintenance and repair, and billing for loops used in line splitting arrangements.

(ii) *Line conditioning*. The incumbent LEC shall condition a copper loop at the request of the carrier seeking access to a copper loop under paragraph (a)(1) of this section or a copper subloop under paragraph (b) of this section to ensure that the copper loop or copper subloop is suitable for providing digital subscriber line services, whether or not the incumbent LEC offers advanced services to the end-user customer on that copper loop or copper subloop. If the incumbent LEC seeks compensation from the requesting telecommunications carrier for line conditioning, the requesting telecommunications carrier has the option of refusing, in whole or in part, to have the line conditioned; and a requesting telecommunications carrier's refusal of some or all aspects of line conditioning will not diminish any right it may have, under paragraphs (a) and (b) of this section, to access the copper loop or the copper subloop.

(A) Line conditioning is defined as the removal from a copper loop or copper subloop of any device that could diminish the capability of the loop or subloop to deliver high-speed switched wireline telecommunications capability, including digital subscriber line service. Such devices include, but are not limited to, bridge taps, load coils, low pass filters, and range extenders.

(B) Incumbent LECs shall recover the costs of line conditioning from the requesting telecommunications carrier in accordance with the Commission's forward-looking pricing principles promulgated pursuant to section 252(d)(1) of the Act and in compliance with rules governing nonrecurring costs in § 51.507(e).

(C) Insofar as it is technically feasible, the incumbent LEC shall test and report troubles for all the features, functions, and capabilities of conditioned copper lines, and may not restrict its testing to voice transmission only.

(iii) *Maintenance, repair, and testing*. (A) An incumbent LEC shall provide, on a nondiscriminatory basis, physical loop test access points to a requesting telecommunications carrier at the splitter, through a cross-connection to the requesting telecommunications carrier's collocation space, or through a standardized interface, such as an intermediate distribution frame or a test access server, for the purpose of testing, maintaining, and repairing copper loops and copper subloops.

(B) An incumbent LEC seeking to utilize an alternative physical access methodology may request approval to do so from the state commission, but must show that the proposed alternative method is reasonable and nondiscriminatory, and will not disadvantage a requesting telecommunications carrier's ability to perform loop or service testing, maintenance, or repair.

(iv) *Control of the loop and splitter functionality*. In situations where a requesting telecommunications carrier is obtaining access to the high frequency portion of a copper loop through a line splitting arrangement, the incumbent LEC may maintain control over the loop and splitter equipment and functions, and shall provide to the requesting telecommunications carrier loop and splitter functionality that is compatible with any transmission technology that the requesting telecommunications carrier seeks to deploy using the high frequency portion of the loop, as defined in paragraph (a)(1)(i) of this section, provided that such transmission technology is presumed to be deployable pursuant to § 51.230.

(2) *Hybrid loops*. A hybrid loop is a local loop composed of both fiber optic cable, usually in the feeder plant, and copper wire or cable, usually in the distribution plant.

(i) *Packet switching facilities, features, functions, and capabilities.* An incumbent LEC is not required to provide unbundled access to the packet switched features, functions and capabilities of its hybrid loops. Packet switching capability is the routing or forwarding of packets, frames, cells, or other data units based on address or other routing information contained in the packets, frames, cells or other data units, and the functions that are performed by the digital subscriber line access multiplexers, including but not limited to the ability to terminate an end-user customer's copper loop (which includes both a low-band voice channel and a high-band data channel, or solely a data channel); the ability to forward the voice channels, if present, to a circuit switch or multiple circuit switches; the ability to extract data units from the data channels on the loops; and the ability to combine data units from multiple loops onto one or more trunks connecting to a packet switch or packet switches.

(ii) *Broadband services.* When a requesting telecommunications carrier seeks access to a hybrid loop for the provision of broadband services, an incumbent LEC shall provide the requesting telecommunications carrier with nondiscriminatory access to the time division multiplexing features, functions, and capabilities of that hybrid loop, including DS1 or DS3 capacity (where impairment has been found to exist), on an unbundled basis to establish a complete transmission path between the incumbent LEC's central office and an end user's customer premises. This access shall include access to all features, functions, and capabilities of the hybrid loop that are not used to transmit packetized information.

(iii) *Narrowband services.* When a requesting telecommunications carrier seeks access to a hybrid loop for the provision of narrowband services, the incumbent LEC may either:

(A) Provide nondiscriminatory access, on an unbundled basis, to an entire hybrid loop capable of voice-grade service (i.e., equivalent to DS0 capacity), using time division multiplexing technology; or

(B) Provide nondiscriminatory access to a spare home-run copper loop serving that customer on an unbundled basis.

(3) *Fiber loops*—(i) *Definitions*—(A) *Fiber-to-the-home loops.* A fiber-to-the-home loop is a local loop consisting entirely of fiber optic cable, whether dark or lit, serving an end user's customer premises or, in the case of predominantly residential multiple dwelling units (MDUs), a fiber optic cable, whether dark or lit, that extends to the multiunit premises' minimum point of entry (MPOE).

(B) *Fiber-to-the-curb loops.* A fiber-to-the-curb loop is a local loop consisting of fiber optic cable connecting to a copper distribution plant that is not more than 500 feet from the customer's premises or, in the case of predominantly residential MDUs, not more than 500 feet from the MDU's MPOE. The fiber optic cable in a fiber-to-the-curb loop must connect to a copper distribution plant at a serving area interface from which every other copper distribution subloop also is not more than 500 feet from the respective customer's premises.

(ii) *New builds.* An incumbent LEC is not required to provide nondiscriminatory access to a fiber-to-the-home loop or a fiber-to-the-curb loop on an unbundled basis when the incumbent LEC deploys such a loop to an end user's customer premises that previously has not been served by any loop facility.

(iii) *Overbuilds.* An incumbent LEC is not required to provide nondiscriminatory access to a fiber-to-the-home loop or a fiber-to-the-curb loop on an unbundled basis when the incumbent LEC has deployed such a loop parallel to, or in replacement of, an existing copper loop facility, except that:

(A) The incumbent LEC must maintain the existing copper loop connected to the particular customer premises after deploying the fiber-to-the-home loop or the fiber-to-the-curb loop and provide nondiscriminatory access to that copper loop on an unbundled basis unless the incumbent LEC retires the copper loops pursuant to paragraph (a)(3)(iv) of this section.

(B) An incumbent LEC that maintains the existing copper loops pursuant to paragraph (a)(3)(iii)(A) of this section need not incur any expenses to

ensure that the existing copper loop remains capable of transmitting signals prior to receiving a request for access pursuant to that paragraph, in which case the incumbent LEC shall restore the copper loop to serviceable condition upon request.

(C) An incumbent LEC that retires the copper loop pursuant to paragraph (a)(3)(iv) of this section shall provide nondiscriminatory access to a 64 kilobits per second transmission path capable of voice grade service over the fiber-to-the-home loop or fiber-to-the-curb loop on an unbundled basis.

(iv) *Retirement of copper loops or copper subloops.* Prior to retiring any copper loop or copper subloop that has been replaced with a fiber-to-the-home loop or a fiber-to-the-curb loop, an incumbent LEC must comply with:

(A) The network disclosure requirements set forth in section 251(c)(5) of the Act and in §51.325 through §51.335; and

(B) Any applicable state requirements.

(4) *DS1 loops.* (i) Subject to the cap described in paragraph (a)(4)(ii) of this section, an incumbent LEC shall provide a requesting telecommunications carrier with nondiscriminatory access to a DS1 loop on an unbundled basis to any building not served by a wire center with at least 60,000 business lines and at least four fiber-based collocators. Once a wire center exceeds both of these thresholds, no future DS1 loop unbundling will be required in that wire center. A DS1 loop is a digital local loop having a total digital signal speed of 1.544 megabytes per second. DS1 loops include, but are not limited to, two-wire and four-wire copper loops capable of providing high-bit rate digital subscriber line services, including T1 services.

(ii) *Cap on unbundled DS1 loop circuits.* A requesting telecommunications carrier may obtain a maximum of ten unbundled DS1 loops to any single building in which DS1 loops are available as unbundled loops.

(5) *DS3 loops.* (i) Subject to the cap described in paragraph (a)(5)(ii) of this section, an incumbent LEC shall provide a requesting telecommunications carrier with nondiscriminatory access to a DS3 loop on an unbundled basis to any building not served by a wire center with at least 38,000 business lines and at least four fiber-based collocators. Once a wire center exceeds both of these thresholds, no future DS3 loop unbundling will be required in that wire center. A DS3 loop is a digital local loop having a total digital signal speed of 44.736 megabytes per second.

(ii) *Cap on unbundled DS3 loop circuits.* A requesting telecommunications carrier may obtain a maximum of a single unbundled DS3 loop to any single building in which DS3 loops are available as unbundled loops.

(6) *Dark fiber loops.* An incumbent LEC is not required to provide requesting telecommunications carriers with access to a dark fiber loop on an unbundled basis. Dark fiber is fiber within an existing fiber optic cable that has not yet been activated through optronics to render it capable of carrying communications services.

(7) *Routine network modifications.* (i) An incumbent LEC shall make all routine network modifications to unbundled loop facilities used by requesting telecommunications carriers where the requested loop facility has already been constructed. An incumbent LEC shall perform these routine network modifications to unbundled loop facilities in a nondiscriminatory fashion, without regard to whether the loop facility being accessed was constructed on behalf, or in accordance with the specifications, of any carrier.

(ii) A routine network modification is an activity that the incumbent LEC regularly undertakes for its own customers. Routine network modifications include, but are not limited to, rearranging or splicing of cable; adding an equipment case; adding a doubler or repeater; adding a smart jack; installing a repeater shelf; adding a line card; deploying a new multiplexer or reconfiguring an existing multiplexer; and attaching electronic and other equipment that the incumbent LEC ordinarily attaches to a DS1 loop to activate such loop for its own customer. Routine network modifications may entail activities such as accessing manholes, deploying bucket trucks to reach aerial cable, and installing equipment casings. Routine network

modifications do not include the construction of a new loop, or the installation of new aerial or buried cable for a requesting telecommunications carrier.

(8) *Engineering policies, practices, and procedures.* An incumbent LEC shall not engineer the transmission capabilities of its network in a manner, or engage in any policy, practice, or procedure, that disrupts or degrades access to a local loop or subloop, including the time division multiplexing-based features, functions, and capabilities of a hybrid loop, for which a requesting telecommunications carrier may obtain or has obtained access pursuant to paragraph (a) of this section.

(b) *Subloops.* An incumbent LEC shall provide a requesting telecommunications carrier with nondiscriminatory access to subloops on an unbundled basis in accordance with section 251(c)(3) of the Act and this part and as set forth in paragraph (b) of this section.

(1) *Copper subloops.* An incumbent LEC shall provide a requesting telecommunications carrier with nondiscriminatory access to a copper subloop on an unbundled basis. A copper subloop is a portion of a copper loop, or hybrid loop, comprised entirely of copper wire or copper cable that acts as a transmission facility between any point of technically feasible access in an incumbent LEC's outside plant, including inside wire owned or controlled by the incumbent LEC, and the end-user customer premises. A copper subloop includes all intermediate devices (including repeaters and load coils) used to establish a transmission path between a point of technically feasible access and the demarcation point at the end-user customer premises, and includes the features, functions, and capabilities of the copper loop. Copper subloops include two-wire and four-wire analog voice-grade subloops as well as two-wire and four-wire subloops conditioned to transmit the digital signals needed to provide digital subscriber line services, regardless of whether the subloops are in service or held as spares.

(i) *Point of technically feasible access.* A point of technically feasible access is any point in the incumbent LEC's outside plant where a technician can access the copper wire within a cable without removing a splice case. Such points include, but are not limited to, a pole or pedestal, the serving area interface, the network interface device, the minimum point of entry, any remote terminal, and the feeder/distribution interface. An incumbent LEC shall, upon a site-specific request, provide access to a copper subloop at a splice near a remote terminal. The incumbent LEC shall be compensated for providing this access in accordance with §§ 51.501 through 51.515.

(ii) *Rules for collocation.* Access to the copper subloop is subject to the Commission's collocation rules at §§ 51.321 and 51.323.

(2) *Subloops for access to multiunit premises wiring.* An incumbent LEC shall provide a requesting telecommunications carrier with nondiscriminatory access to the subloop for access to multiunit premises wiring on an unbundled basis regardless of the capacity level or type of loop that the requesting telecommunications carrier seeks to provision for its customer. The subloop for access to multiunit premises wiring is defined as any portion of the loop that it is technically feasible to access at a terminal in the incumbent LEC's outside plant at or near a multiunit premises. One category of this subloop is inside wire, which is defined for purposes of this section as all loop plant owned or controlled by the incumbent LEC at a multiunit customer premises between the minimum point of entry as defined in § 68.105 of this chapter and the point of demarcation of the incumbent LEC's network as defined in § 68.3 of this chapter.

(i) *Point of technically feasible access.* A point of technically feasible access is any point in the incumbent LEC's outside plant at or near a multiunit premises where a technician can access the wire or fiber within the cable without removing a splice case to reach the wire or fiber within to access the wiring in the multiunit premises. Such points include, but are not limited to, a pole or pedestal, the network interface device, the minimum point of

entry, the single point of interconnection, and the feeder/distribution interface.

(ii) *Single point of interconnection.* Upon notification by a requesting telecommunications carrier that it requests interconnection at a multiunit premises where the incumbent LEC owns, controls, or leases wiring, the incumbent LEC shall provide a single point of interconnection that is suitable for use by multiple carriers. This obligation is in addition to the incumbent LEC's obligations, under paragraph (b)(2) of this section, to provide nondiscriminatory access to a subloop for access to multiunit premises wiring, including any inside wire, at any technically feasible point. If the parties are unable to negotiate rates, terms, and conditions under which the incumbent LEC will provide this single point of interconnection, then any issues in dispute regarding this obligation shall be resolved in state proceedings under section 252 of the Act.

(3) *Other subloop provisions*—(i) *Technical feasibility.* If parties are unable to reach agreement through voluntary negotiations as to whether it is technically feasible, or whether sufficient space is available, to unbundle a copper subloop or subloop for access to multiunit premises wiring at the point where a telecommunications carrier requests, the incumbent LEC shall have the burden of demonstrating to the state commission, in state proceedings under section 252 of the Act, that there is not sufficient space available, or that it is not technically feasible to unbundle the subloop at the point requested.

(ii) *Best practices.* Once one state commission has determined that it is technically feasible to unbundle subloops at a designated point, an incumbent LEC in any state shall have the burden of demonstrating to the state commission, in state proceedings under section 252 of the Act, that it is not technically feasible, or that sufficient space is not available, to unbundle its own loops at such a point.

(c) *Network interface device.* Apart from its obligation to provide the network interface device functionality as part of an unbundled loop or subloop, an incumbent LEC also shall provide nondiscriminatory access to the network interface device on an unbundled basis, in accordance with section 251(c)(3) of the Act and this part. The network interface device element is a stand-alone network element and is defined as any means of interconnection of customer premises wiring to the incumbent LEC's distribution plant, such as a cross-connect device used for that purpose. An incumbent LEC shall permit a requesting telecommunications carrier to connect its own loop facilities to on-premises wiring through the incumbent LEC's network interface device, or at any other technically feasible point.

(d) *Dedicated transport.* An incumbent LEC shall provide a requesting telecommunications carrier with nondiscriminatory access to dedicated transport on an unbundled basis, in accordance with section 251(c)(3) of the Act and this part, as set forth in paragraphs (d) through (d)(4) of this section. A ''route'' is a transmission path between one of an incumbent LEC's wire centers or switches and another of the incumbent LEC's wire centers or switches. A route between two points (*e.g.*, wire center or switch ''A'' and wire center or switch ''Z'') may pass through one or more intermediate wire centers or switches (*e.g.*, wire center or switch ''X''). Transmission paths between identical end points (*e.g.*, wire center or switch ''A'' and wire center or switch ''Z'') are the same ''route,'' irrespective of whether they pass through the same intermediate wire centers or switches, if any.

(1) *Definition.* For purposes of this section, dedicated transport includes incumbent LEC transmission facilities between wire centers or switches owned by incumbent LECs, or between wire centers or switches owned by incumbent LECs and switches owned by requesting telecommunications carriers, including, but not limited to, DS1-, DS3-, and OCn-capacity level services, as well as dark fiber, dedicated to a particular customer or carrier.

(2) *Availability.*

(i) *Entrance facilities.* An incumbent LEC is not obligated to provide a requesting carrier with unbundled access to dedicated transport that does not

connect a pair of incumbent LEC wire centers.

(ii) *Dedicated DS1 transport*. Dedicated DS1 transport shall be made available to requesting carriers on an unbundled basis as set forth in paragraphs (d)(2)(ii)(A) and (B) of this section. Dedicated DS1 transport consists of incumbent LEC interoffice transmission facilities that have a total digital signal speed of 1.544 megabytes per second and are dedicated to a particular customer or carrier.

(A) *General availability of DS1 transport*. Incumbent LECs shall unbundle DS1 transport between any pair of incumbent LEC wire centers except where, through application of tier classifications described in paragraph (d)(3) of this section, both wire centers defining the route are Tier 1 wire centers. As such, an incumbent LEC must unbundle DS1 transport if a wire center at either end of a requested route is not a Tier 1 wire center, or if neither is a Tier 1 wire center.

(B) *Cap on unbundled DS1 transport circuits*. A requesting telecommunications carrier may obtain a maximum of ten unbundled DS1 dedicated transport circuits on each route where DS1 dedicated transport is available on an unbundled basis.

(iii) *Dedicated DS3 transport*. Dedicated DS3 transport shall be made available to requesting carriers on an unbundled basis as set forth in paragraphs (d)(2)(iii)(A) and(B) of this section. Dedicated DS3 transport consists of incumbent LEC interoffice transmission facilities that have a total digital signal speed of 44.736 megabytes per second and are dedicated to a particular customer or carrier.

(A) *General availability of DS3 transport*. Incumbent LECs shall unbundle DS3 transport between any pair of incumbent LEC wire centers except where, through application of tier classifications described in paragraph (d)(3) of this section, both wire centers defining the route are either Tier 1 or Tier 2 wire centers. As such, an incumbent LEC must unbundle DS3 transport if a wire center on either end of a requested route is a Tier 3 wire center.

(B) *Cap on unbundled DS3 transport circuits*. A requesting telecommunications carrier may obtain a maximum of 12 unbundled DS3 dedicated transport circuits on each route where DS3 dedicated transport is available on an unbundled basis.

(iv) *Dark fiber transport*. Dark fiber transport consists of unactivated optical interoffice transmission facilities. Incumbent LECs shall unbundle dark fiber transport between any pair of incumbent LEC wire centers except where, through application of tier classifications described in paragraph (d)(3) of this section, both wire centers defining the route are either Tier 1 or Tier 2 wire centers. An incumbent LEC must unbundle dark fiber transport if a wire center on either end of a requested route is a Tier 3 wire center.

(3) *Wire center tier structure*. For purposes of this section, incumbent LEC wire centers shall be classified into three tiers, defined as follows:

(i) Tier 1 wire centers are those incumbent LEC wire centers that contain at least four fiber-based collocators, at least 38,000 business lines, or both. Tier 1 wire centers also are those incumbent LEC tandem switching locations that have no line-side switching facilities, but nevertheless serve as a point of traffic aggregation accessible by competitive LECs. Once a wire center is determined to be a Tier 1 wire center, that wire center is not subject to later reclassification as a Tier 2 or Tier 3 wire center.

(ii) Tier 2 wire centers are those incumbent LEC wire centers that are not Tier 1 wire centers, but contain at least 3 fiber-based collocators, at least 24,000 business lines, or both. Once a wire center is determined to be a Tier 2 wire center, that wire center is not subject to later reclassification as a Tier 3 wire center.

(iii) Tier 3 wire centers are those incumbent LEC wire centers that do not meet the criteria for Tier 1 or Tier 2 wire centers.

(4) *Routine network modifications*. (i) An incumbent LEC shall make all routine network modifications to unbundled dedicated transport facilities used by requesting telecommunications carriers where the requested dedicated transport facilities have already been constructed. An incumbent LEC shall perform all routine network modifications to unbundled dedicated

transport facilities in a nondiscriminatory fashion, without regard to whether the facility being accessed was constructed on behalf, or in accordance with the specifications, of any carrier.

(ii) A routine network modification is an activity that the incumbent LEC regularly undertakes for its own customers. Routine network modifications include, but are not limited to, rearranging or splicing of cable; adding an equipment case; adding a doubler or repeater; installing a repeater shelf; and deploying a new multiplexer or reconfiguring an existing multiplexer. They also include activities needed to enable a requesting telecommunications carrier to light a dark fiber transport facility. Routine network modifications may entail activities such as accessing manholes, deploying bucket trucks to reach aerial cable, and installing equipment casings. Routine network modifications do not include the installation of new aerial or buried cable for a requesting telecommunications carrier.

(e) *911 and E911 databases.* An incumbent LEC shall provide a requesting telecommunications carrier with nondiscriminatory access to 911 and E911 databases on an unbundled basis, in accordance with section 251(c)(3) of the Act and this part.

(f) *Operations support systems.* An incumbent LEC shall provide a requesting telecommunications carrier with nondiscriminatory access to operations support systems on an unbundled basis, in accordance with section 251(c)(3) of the Act and this part. Operations support system functions consist of pre-ordering, ordering, provisioning, maintenance and repair, and billing functions supported by an incumbent LEC's databases and information. An incumbent LEC, as part of its duty to provide access to the pre-ordering function, shall provide the requesting telecommunications carrier with nondiscriminatory access to the same detailed information about the loop that is available to the incumbent LEC.

[68 FR 52295, Sept. 4, 2003, as amended at 68 FR 64000, Nov. 12, 2003; 69 FR 54591, Sept. 9, 2004; 69 FR 77953, Dec. 29, 2004; 70 FR 8953, Feb. 24, 2005:78 FR 5746, Jan. 28, 2013]

§ 51.320 Assumption of responsibility by the Commission.

If a state commission fails to exercise its authority under § 51.319, any party seeking that the Commission step into the role of the state commission shall file with the Commission and serve on the state commission a petition that explains with specificity the bases for the petition and information that supports the claim that the state commission has failed to act. Subsequent to the Commission's issuing a public notice and soliciting comments on the petition from interested parties, the Commission will rule on the petition within 90 days of the date of the public notice. If it agrees that the state commission has failed to act, the Commission will assume responsibility for the proceeding, and within nine months from the date it assumed responsibility for the proceeding, make any findings in accordance with the Commission's rules.

[68 FR 52305, Sept. 2, 2003]

§ 51.321 Methods of obtaining interconnection and access to unbundled elements under section 251 of the Act.

(a) Except as provided in paragraph (e) of this section, an incumbent LEC shall provide, on terms and conditions that are just, reasonable, and nondiscriminatory in accordance with the requirements of this part, any technically feasible method of obtaining interconnection or access to unbundled network elements at a particular point upon a request by a telecommunications carrier.

(b) Technically feasible methods of obtaining interconnection or access to unbundled network elements include, but are not limited to:

(1) Physical collocation and virtual collocation at the premises of an incumbent LEC; and

(2) Meet point interconnection arrangements.

(c) A previously successful method of obtaining interconnection or access to unbundled network elements at a particular premises or point on any incumbent LEC's network is substantial evidence that such method is technically feasible in the case of substantially similar network premises or

points. A requesting telecommunications carrier seeking a particular collocation arrangement, either physical or virtual, is entitled to a presumption that such arrangement is technically feasible if any LEC has deployed such collocation arrangement in any incumbent LEC premises.

(d) An incumbent LEC that denies a request for a particular method of obtaining interconnection or access to unbundled network elements on the incumbent LEC's network must prove to the state commission that the requested method of obtaining interconnection or access to unbundled network elements at that point is not technically feasible.

(e) An incumbent LEC shall not be required to provide for physical collocation of equipment necessary for interconnection or access to unbundled network elements at the incumbent LEC's premises if it demonstrates to the state commission that physical collocation is not practical for technical reasons or because of space limitations. In such cases, the incumbent LEC shall be required to provide virtual collocation, except at points where the incumbent LEC proves to the state commission that virtual collocation is not technically feasible. If virtual collocation is not technically feasible, the incumbent LEC shall provide other methods of interconnection and access to unbundled network elements to the extent technically feasible.

(f) An incumbent LEC shall submit to the state commission, subject to any protective order as the state commission may deem necessary, detailed floor plans or diagrams of any premises where the incumbent LEC claims that physical collocation is not practical because of space limitations. These floor plans or diagrams must show what space, if any, the incumbent LEC or any of its affiliates has reserved for future use, and must describe in detail the specific future uses for which the space has been reserved and the length of time for each reservation. An incumbent LEC that contends space for physical collocation is not available in an incumbent LEC premises must also allow the requesting carrier to tour the entire premises in question, not only the area in which space was denied, without charge, within ten days of the receipt of the incumbent's denial of space. An incumbent LEC must allow a requesting telecommunications carrier reasonable access to its selected collocation space during construction.

(g) An incumbent LEC that is classified as a Class A company under § 32.11 of this chapter and that is not a National Exchange Carrier Association interstate tariff participant as provided in part 69, subpart G, shall continue to provide expanded interconnection service pursuant to interstate tariff in accordance with §§ 64.1401, 64.1402, 69.121 of this chapter, and the Commission's other requirements.

(h) Upon request, an incumbent LEC must submit to the requesting carrier within ten days of the submission of the request a report describing in detail the space that is available for collocation in a particular incumbent LEC premises. This report must specify the amount of collocation space available at each requested premises, the number of collocators, and any modifications in the use of the space since the last report. This report must also include measures that the incumbent LEC is taking to make additional space available for collocation. The incumbent LEC must maintain a publicly available document, posted for viewing on the incumbent LEC's publicly available Internet site, indicating all premises that are full, and must update such a document within ten days of the date at which a premises runs out of physical collocation space.

(i) An incumbent LEC must, upon request, remove obsolete unused equipment from their premises to increase the amount of space available for collocation.

[61 FR 45619, Aug. 28, 1996, as amended at 64 FR 23241, Apr. 30, 1999; 65 FR 54438, Sept. 8, 2000; 66 FR 43521, Aug. 20, 2001]

§ 51.323 Standards for physical collocation and virtual collocation.

(a) An incumbent LEC shall provide physical collocation and virtual collocation to requesting telecommunications carriers.

(b) An incumbent LEC shall permit the collocation and use of any equipment necessary for interconnection or access to unbundled network elements.

(1) Equipment is necessary for interconnection if an inability to deploy that equipment would, as a practical, economic, or operational matter, preclude the requesting carrier from obtaining interconnection with the incumbent LEC at a level equal in quality to that which the incumbent obtains within its own network or the incumbent provides to any affiliate, subsidiary, or other party.

(2) Equipment is necessary for access to an unbundled network element if an inability to deploy that equipment would, as a practical, economic, or operational matter, preclude the requesting carrier from obtaining nondiscriminatory access to that unbundled network element, including any of its features, functions, or capabilities.

(3) Multi-functional equipment shall be deemed necessary for interconnection or access to an unbundled network element if and only if the primary purpose and function of the equipment, as the requesting carrier seeks to deploy it, meets either or both of the standards set forth in paragraphs (b)(1) and (b)(2) of this section. For a piece of equipment to be utilized primarily to obtain equal in quality interconnection or nondiscriminatory access to one or more unbundled network elements, there also must be a logical nexus between the additional functions the equipment would perform and the telecommunication services the requesting carrier seeks to provide to its customers by means of the interconnection or unbundled network element. The collocation of those functions of the equipment that, as stand-alone functions, do not meet either of the standards set forth in paragraphs (b)(1) and (b)(2) of this section must not cause the equipment to significantly increase the burden on the incumbent's property.

(c) Whenever an incumbent LEC objects to collocation of equipment by a requesting telecommunications carrier for purposes within the scope of section 251(c)(6) of the Act, the incumbent LEC shall prove to the state commission that the equipment is not necessary for interconnection or access to unbundled network elements under the standards set forth in paragraph (b) of this section. An incumbent LEC may not object to the collocation of equipment on the grounds that the equipment does not comply with safety or engineering standards that are more stringent than the safety or engineering standards that the incumbent LEC applies to its own equipment. An incumbent LEC may not object to the collocation of equipment on the ground that the equipment fails to comply with Network Equipment and Building Specifications performance standards or any other performance standards. An incumbent LEC that denies collocation of a competitor's equipment, citing safety standards, must provide to the competitive LEC within five business days of the denial a list of all equipment that the incumbent LEC locates at the premises in question, together with an affidavit attesting that all of that equipment meets or exceeds the safety standard that the incumbent LEC contends the competitor's equipment fails to meet. This affidavit must set forth in detail: the exact safety requirement that the requesting carrier's equipment does not satisfy; the incumbent LEC's basis for concluding that the requesting carrier's equipment does not meet this safety requirement; and the incumbent LEC's basis for concluding why collocation of equipment not meeting this safety requirement would compromise network safety.

(d) When an incumbent LEC provides physical collocation, virtual collocation, or both, the incumbent LEC shall:

(1) Provide an interconnection point or points, physically accessible by both the incumbent LEC and the collocating telecommunications carrier, at which the fiber optic cable carrying an interconnector's circuits can enter the incumbent LEC's premises, provided that the incumbent LEC shall designate interconnection points as close as reasonably possible to its premises;

(2) Provide at least two such interconnection points at each incumbent LEC premises at which there are at least two entry points for the incumbent LEC's cable facilities, and at which space is available for new facilities in at least two of those entry points;

(3) Permit interconnection of copper or coaxial cable if such interconnection

is first approved by the state commission; and

(4) Permit physical collocation of microwave transmission facilities except where such collocation is not practical for technical reasons or because of space limitations, in which case virtual collocation of such facilities is required where technically feasible.

(e) When providing virtual collocation, an incumbent LEC shall, at a minimum, install, maintain, and repair collocated equipment meeting the standards set forth in paragraph (b) of this section within the same time periods and with failure rates that are no greater than those that apply to the performance of similar functions for comparable equipment of the incumbent LEC itself.

(f) An incumbent LEC shall provide space for the collocation of equipment meeting the standards set forth in paragraph (b) of this section in accordance with the following requirements:

(1) An incumbent LEC shall make space available within or on its premises to requesting telecommunications carriers on a first-come, first-served basis, provided, however, that the incumbent LEC shall not be required to lease or construct additional space to provide for physical collocation when existing space has been exhausted;

(2) To the extent possible, an incumbent LEC shall make contiguous space available to requesting telecommunications carriers that seek to expand their existing collocation space;

(3) When planning renovations of existing facilities or constructing or leasing new facilities, an incumbent LEC shall take into account projected demand for collocation of equipment;

(4) An incumbent LEC may retain a limited amount of floor space for its own specific future uses, provided, however, that neither the incumbent LEC nor any of its affiliates may reserve space for future use on terms more favorable than those that apply to other telecommunications carriers seeking to reserve collocation space for their own future use;

(5) An incumbent LEC shall relinquish any space held for future use before denying a request for virtual collocation on the grounds of space limitations, unless the incumbent LEC proves to the state commission that virtual collocation at that point is not technically feasible; and

(6) An incumbent LEC may impose reasonable restrictions on the warehousing of unused space by collocating telecommunications carriers, provided, however, that the incumbent LEC shall not set maximum space limitations applicable to such carriers unless the incumbent LEC proves to the state commission that space constraints make such restrictions necessary.

(7) An incumbent LEC must assign collocation space to requesting carriers in a just, reasonable, and nondiscriminatory manner. An incumbent LEC must allow each carrier requesting physical collocation to submit space preferences prior to assigning physical collocation space to that carrier. At a minimum, an incumbent LEC's space assignment policies and practices must meet the following principles:

(A) An incumbent LEC's space assignment policies and practices must not materially increase a requesting carrier's collocation costs.

(B) An incumbent LEC's space assignment policies and practices must not materially delay a requesting carrier occupation and use of the incumbent LEC's premises.

(C) An incumbent LEC must not assign physical collocation space that will impair the quality of service or impose other limitations on the service a requesting carrier wishes to offer.

(D) An incumbent LEC's space assignment policies and practices must not reduce unreasonably the total space available for physical collocation or preclude unreasonably physical collocation within the incumbent's premises.

(g) An incumbent LEC shall permit collocating telecommunications carriers to collocate equipment and connect such equipment to unbundled network transmission elements obtained from the incumbent LEC, and shall not require such telecommunications carriers to bring their own transmission facilities to the incumbent LEC's premises in which they seek to collocate equipment.

(h) As described in paragraphs (1) and (2) of this section, an incumbent LEC shall permit a collocating telecommunications carrier to interconnect its network with that of another collocating telecommunications carrier at the incumbent LEC's premises and to connect its collocated equipment to the collocated equipment of another telecommunications carrier within the same premises, provided that the collocated equipment is also used for interconnection with the incumbent LEC or for access to the incumbent LEC's unbundled network elements.

(1) An incumbent LEC shall provide, at the request of a collocating telecommunications carrier, a connection between the equipment in the collocated spaces of two or more telecommunications carriers, except to the extent the incumbent LEC permits the collocating parties to provide the requested connection for themselves or a connection is not required under paragraph (h)(2) of this section. Where technically feasible, the incumbent LEC shall provide the connection using copper, dark fiber, lit fiber, or other transmission medium, as requested by the collocating telecommunications carrier.

(2) An incumbent LEC is not required to provide a connection between the equipment in the collocated spaces of two or more telecommunications carriers if the connection is requested pursuant to section 201 of the Act, unless the requesting carrier submits to the incumbent LEC a certification that more than 10 percent of the amount of traffic to be transmitted through the connection will be interstate. The incumbent LEC cannot refuse to accept the certification, but instead must provision the service promptly. Any incumbent LEC may file a section 208 complaint with the Commission challenging the certification if it believes that the certification is deficient. No such certification is required for a request for such connection under section 251 of the Act.

(i) As provided herein, an incumbent LEC may require reasonable security arrangements to protect its equipment and ensure network reliability. An incumbent LEC may only impose security arrangements that are as stringent as the security arrangements that the incumbent LEC maintains at its own premises for its own employees or authorized contractors. An incumbent LEC must allow collocating parties to access their collocated equipment 24 hours a day, seven days a week, without requiring either a security escort of any kind or delaying a competitor's employees' entry into the incumbent LEC's premises. An incumbent LEC may require a collocating carrier to pay only for the least expensive, effective security option that is viable for the physical collocation space assigned. Reasonable security measures that the incumbent LEC may adopt include:

(1) Installing security cameras or other monitoring systems; or

(2) Requiring competitive LEC personnel to use badges with computerized tracking systems; or

(3) Requiring competitive LEC employees to undergo the same level of security training, or its equivalent, that the incumbent's own employees, or third party contractors providing similar functions, must undergo; provided, however, that the incumbent LEC may not require competitive LEC employees to receive such training from the incumbent LEC itself, but must provide information to the competitive LEC on the specific type of training required so the competitive LEC's employees can conduct their own training.

(4) Restricting physical collocation to space separated from space housing the incumbent LEC's equipment, provided that each of the following conditions is met:

(i) Either legitimate security concerns, or operational constraints unrelated to the incumbent's or any of its affiliates' or subsidiaries competitive concerns, warrant such separation;

(ii) Any physical collocation space assigned to an affiliate or subsidiary of the incumbent LEC is separated from space housing the incumbent LEC's equipment;

(iii) The separated space will be available in the same time frame as, or a shorter time frame than, non-separated space;

(iv) The cost of the separated space to the requesting carrier will not be materially higher than the cost of non-separated space; and

(v) The separated space is comparable, from a technical and engineering standpoint, to non-separated space.

(5) Requiring the employees and contractors of collocating carriers to use a central or separate entrance to the incumbent's building, provided, however, that where an incumbent LEC requires that the employees or contractors of collocating carriers access collocated equipment only through a separate entrance, employees and contractors of the incumbent LEC's affiliates and subsidiaries must be subject to the same restriction.

(6) Constructing or requiring the construction of a separate entrance to access physical collocation space, provided that each of the following conditions is met:

(i) Construction of a separate entrance is technically feasible;

(ii) Either legitimate security concerns, or operational constraints unrelated to the incumbent's or any of its affiliates' or subsidiaries competitive concerns, warrant such separation;

(iii) Construction of a separate entrance will not artificially delay collocation provisioning; and

(iv) Construction of a separate entrance will not materially increase the requesting carrier's costs.

(j) An incumbent LEC shall permit a collocating telecommunications carrier to subcontract the construction of physical collocation arrangements with contractors approved by the incumbent LEC, provided, however, that the incumbent LEC shall not unreasonably withhold approval of contractors. Approval by an incumbent LEC shall be based on the same criteria it uses in approving contractors for its own purposes.

(k) An incumbent LEC's physical collocation offering must include the following:

(1) *Shared collocation cages.* A shared collocation cage is a caged collocation space shared by two or more competitive LECs pursuant to terms and conditions agreed to by the competitive LECs. In making shared cage arrangements available, an incumbent LEC may not increase the cost of site preparation or nonrecurring charges above the cost for provisioning such a cage of similar dimensions and material to a single collocating party. In addition, the incumbent must prorate the charge for site conditioning and preparation undertaken by the incumbent to construct the shared collocation cage or condition the space for collocation use, regardless of how many carriers actually collocate in that cage, by determining the total charge for site preparation and allocating that charge to a collocating carrier based on the percentage of the total space utilized by that carrier. An incumbent LEC must make shared collocation space available in single-bay increments or their equivalent, i.e., a competing carrier can purchase space in increments small enough to collocate a single rack, or bay, of equipment.

(2) *Cageless collocation.* Incumbent LECs must allow competitors to collocate without requiring the construction of a cage or similar structure. Incumbent LECs must permit collocating carriers to have direct access to their equipment. An incumbent LEC may not require competitors to use an intermediate interconnection arrangement in lieu of direct connection to the incumbent's network if technically feasible. An incumbent LEC must make cageless collocation space available in single-bay increments, meaning that a competing carrier can purchase space in increments small enough to collocate a single rack, or bay, of equipment.

(3) *Adjacent space collocation.* An incumbent LEC must make available, where physical collocation space is legitimately exhausted in a particular incumbent LEC structure, collocation in adjacent controlled environmental vaults, controlled environmental huts, or similar structures located at the incumbent LEC premises to the extent technically feasible. The incumbent LEC must permit a requesting telecommunications carrier to construct or otherwise procure such an adjacent structure, subject only to reasonable safety and maintenance requirements. The incumbent must provide power and

physical collocation services and facilities, subject to the same nondiscrimination requirements as applicable to any other physical collocation arrangement. The incumbent LEC must permit the requesting carrier to place its own equipment, including, but not limited to, copper cables, coaxial cables, fiber cables, and telecommunications equipment, in adjacent facilities constructed by the incumbent LEC, the requesting carrier, or a third-party. If physical collocation space becomes available in a previously exhausted incumbent LEC structure, the incumbent LEC must not require a carrier to move, or prohibit a competitive LEC from moving, a collocation arrangement into that structure. Instead, the incumbent LEC must continue to allow the carrier to collocate in any adjacent controlled environmental vault, controlled environmental vault, or similar structure that the carrier has constructed or otherwise procured.

(l) An incumbent LEC must offer to provide and provide all forms of physical collocation (*i.e.*, caged, cageless, shared, and adjacent) within the following deadlines, except to the extent a state sets its own deadlines or the incumbent LEC has demonstrated to the state commission that physical collocation is not practical for technical reasons or because of space limitations.

(1) Within ten days after receiving an application for physical collocation, an incumbent LEC must inform the requesting carrier whether the application meets each of the incumbent LEC's established collocation standards. A requesting carrier that resubmits a revised application curing any deficiencies in an application for physical collocation within ten days after being informed of them retains its position within any collocation queue that the incumbent LEC maintains pursuant to paragraph (f)(1) of this section.

(2) Except as stated in paragraphs (l)(3) and (l)(4) of this section, an incumbent LEC must complete provisioning of a requested physical collocation arrangement within 90 days after receiving an application that meets the incumbent LEC's established collocation application standards.

(3) An incumbent LEC need not meet the deadline set forth in paragraph (l)(2) of this section if, after receipt of any price quotation provided by the incumbent LEC, the telecommunications carrier requesting collocation does not notify the incumbent LEC that physical collocation should proceed.

(4) If, within seven days of the requesting carrier's receipt of any price quotation provided by the incumbent LEC, the telecommunications carrier requesting collocation does not notify the incumbent LEC that physical collocation should proceed, then the incumbent LEC need not complete provisioning of a requested physical collocation arrangement until 90 days after receiving such notification from the requesting telecommunications carrier.

[61 FR 45619, Aug. 28, 1996, as amended at 64 FR 23242, Apr. 30, 1999; 65 FR 54439, Sept. 8, 2000; 66 FR 43521, Aug. 20, 2001]

§ 51.325 Notice of network changes: Public notice requirement.

(a) An incumbent local exchange carrier (''LEC'') must provide public notice regarding any network change that:

(1) Will affect a competing service provider's performance or ability to provide service;

(2) Will affect the incumbent LEC's interoperability with other service providers; or

(3) Will affect the manner in which customer premises equipment is attached to the interstate network.

(4) Will result in the retirement of copper loops or copper subloops, and the replacement of such loops with fiber-to-the-home loops or fiber-to-the-curb loops, as those terms are defined in § 51.319(a)(3).

(b) For purposes of this section, *interoperability* means the ability of two or more facilities, or networks, to be connected, to exchange information, and to use the information that has been exchanged.

(c) Until public notice has been given in accordance with §§ 51.325 through 51.335, an incumbent LEC may not disclose to separate affiliates, separated affiliates, or unaffiliated entities (including actual or potential competing service providers or competitors), information about planned network

changes that are subject to this section.

(d) For the purposes of §§ 51.325 through 51.335, the term *services* means telecommunications services or information services.

[61 FR 47351, Sept. 6, 1996, as amended at 64 FR 14148, Mar. 24, 1999; 68 FR 52305, Sept. 2, 2003; 69 FR 77954, Dec. 29, 2004]

§ 51.327 Notice of network changes: Content of notice.

(a) Public notice of planned network changes must, at a minimum, include:

(1) The carrier's name and address;

(2) The name and telephone number of a contact person who can supply additional information regarding the planned changes;

(3) The implementation date of the planned changes;

(4) The location(s) at which the changes will occur;

(5) A description of the type of changes planned (Information provided to satisfy this requirement must include, as applicable, but is not limited to, references to technical specifications, protocols, and standards regarding transmission, signaling, routing, and facility assignment as well as references to technical standards that would be applicable to any new technologies or equipment, or that may otherwise affect interconnection); and

(6) A description of the reasonably foreseeable impact of the planned changes.

(b) The incumbent LEC also shall follow, as necessary, procedures relating to confidential or proprietary information contained in § 51.335.

[61 FR 47351, Sept. 6, 1996]

§ 51.329 Notice of network changes: Methods for providing notice.

(a) In providing the required notice to the public of network changes, an incumbent LEC may use one of the following methods:

(1) Filing a public notice with the Commission; or

(2) Providing public notice through industry fora, industry publications, or the carrier's publicly accessible Internet site. If an incumbent LEC uses any of the methods specified in paragraph (a)(2) of this section, it also must file a certification with the Commission that includes:

(i) A statement that identifies the proposed changes;

(ii) A statement that public notice has been given in compliance with §§ 51.325 through 51.335; and

(iii) A statement identifying the location of the change information and describing how this information can be obtained.

(b) Until the planned change is implemented, an incumbent LEC must keep the notice available for public inspection, and amend the notice to keep the information complete, accurate and up-to-date.

(c) *Specific filing requirements*. Commission filings under this section must be made as follows:

(1) The public notice or certification must be labeled with one of the following titles, as appropriate: ''Public Notice of Network Change Under Rule 51.329(a),'' ''Certification of Public Notice of Network Change Under Rule 51.329(a),'' ''Short Term Public Notice Under Rule 51.333(a),'' or ''Certification of Short Term Public Notice Under Rule 51.333(a).''

(2) Two paper copies of the incumbent LEC's public notice or certification, required under paragraph (a) of this section, must be sent to ''Secretary, Federal Communications Commission, Washington, DC 20554.'' The date on which this filing is received by the Secretary is considered the official filing date.

[61 FR 47351, Sept. 6, 1996, as amended at 67 FR 13225, Mar. 21, 2002; 71 FR 65750, Nov. 9, 2006]

§ 51.331 Notice of network changes: Timing of notice.

(a) An incumbent LEC shall give public notice of planned changes at the make/buy point, as defined in paragraph (b) of this section, but at least 12 months before implementation, except as provided below:

(1) If the changes can be implemented within twelve months of the make/buy point, public notice must be given at the make/buy point, but at least six months before implementation.

(2) If the changes can be implemented within six months of the make/buy

point, public notice may be given pursuant to the short term notice procedures provided in § 51.333.

(b) For purposes of this section, the *make/buy point* is the time at which an incumbent LEC decides to make for itself, or to procure from another entity, any product the design of which affects or relies on a new or changed network interface. If an incumbent LEC's planned changes do not require it to make or to procure a product, then the make/buy point is the point at which the incumbent LEC makes a definite decision to implement a network change.

(1) For purposes of this section, a *product* is any hardware r software for use in an incumbent LEC's network or in conjunction with its facilities that, when installed, could affect the compatibility of an interconnected service provider's network, facilities or services with an incumbent LEC's existing telephone network, facilities or services, or with any of an incumbent carrier's services or capabilities.

(2) For purposes of this section a *definite decision* is reached when an incumbent LEC determines that the change is warranted, establishes a timetable for anticipated implementation, and takes any action toward implementation of the change within its network.

(c) Competing service providers may object to incumbent LEC notice of retirement of copper loops or copper subloops and replacement with fiber-to-the-home loops or fiber-to-the-curb loops in the manner set forth in § 51.333(c).

[61 FR 47352, Sept. 6, 1996, as amended at 68 FR 52305, Sept. 2, 2003; 69 FR 77954, Dec. 29, 2004]

§ 51.333 Notice of network changes: Short term notice, objections thereto and objections to retirement of copper loops or copper subloops.

(a) *Certificate of service.* If an incumbent LEC wishes to provide less than six months notice of planned network changes, the public notice or certification that it files with the Commission must include a certificate of service in addition to the information required by § 51.327(a) or § 51.329(a)(2), as applicable. The certificate of service shall include:

(1) A statement that, at least five business days in advance of its filing with the Commission, the incumbent LEC served a copy of its public notice upon each telephone exchange service provider that directly interconnects with the incumbent LEC's network; and

(2) The name and address of each such telephone exchange service provider upon which the notice was served.

(b) *Implementation date.* The Commission will release a public notice of filings of such short term notices or notices of replacement of copper loops or copper subloops with fiber-to-the-home loops or fiber-to-the-curb loops. The effective date of the network changes referenced in those filings shall be subject to the following requirements:

(1) *Short term notice.* Short term notices shall be deemed final on the tenth business day after the release of the Commission's public notice, unless an objection is filed pursuant to paragraph (c) of this section.

(2) *Replacement of copper loops or copper subloops with fiber-to-the-home loops or fiber-to-the-curb loops.* Notices of replacement of copper loops or copper subloops with fiber-to-the-home loops or fiber-to-the-curb loops shall be deemed approved on the 90th day after the release of the Commission's public notice of the filing, unless an objection is filed pursuant to paragraph (c) of this section. Incumbent LEC notice of intent to retire any copper loops or copper subloops and replace such loops or subloops with fiber-to-the-home loops or fiber-to-the-curb loops shall be subject to the short term notice provisions of this section, but under no circumstances may an incumbent LEC provide less than 90 days notice of such a change.

(c) *Objection procedures for short term notice and notices of replacement of copper loops or copper subloops with fiber-to-the-home loops or fiber-to-the-curb loops.* An objection to an incumbent LEC's short term notice or to its notice that it intends to retire copper loops or copper subloops and replace such loops or subloops with fiber-to-the-home loops or fiber-to-the-curb loops may be filed by an information service provider or telecommunications service provider

that directly interconnects with the incumbent LEC's network. Such objections must be filed with the Commission, and served on the incumbent LEC, no later than the ninth business day following the release of the Commission's public notice. All objections filed under this section must:

(1) State specific reasons why the objector cannot accommodate the incumbent LEC's changes by the date stated in the incumbent LEC's public notice and must indicate any specific technical information or other assistance required that would enable the objector to accommodate those changes;

(2) List steps the objector is taking to accommodate the incumbent LEC's changes on an expedited basis;

(3) State the earliest possible date (not to exceed six months from the date the incumbent LEC gave its original public notice under this section) by which the objector anticipates that it can accommodate the incumbent LEC's changes, assuming it receives the technical information or other assistance requested under paragraph (c)(1) of this section;

(4) Provide any other information relevant to the objection; and

(5) Provide the following affidavit, executed by the objector's president, chief executive officer, or other corporate officer or official, who has appropriate authority to bind the corporation, and knowledge of the details of the objector's inability to adjust its network on a timely basis:

"I, (*name and title*), under oath and subject to penalty for perjury, certify that I have read this objection, that the statements contained in it are true, that there is good ground to support the objection, and that it is not interposed for purposes of delay. I have appropriate authority to make this certification on behalf of (*objector*) and I agree to provide any information the Commission may request to allow the Commission to evaluate the truthfulness and validity of the statements contained in this objection."

(d) *Response to objections.* If an objection is filed, an incumbent LEC shall have until no later than the fourteenth business day following the release of the Commission's public notice to file with the Commission a response to the objection and to serve the response on all parties that filed objections. An incumbent LEC's response must:

(1) Provide information responsive to the allegations and concerns identified by the objectors;

(2) State whether the implementation date(s) proposed by the objector(s) are acceptable;

(3) Indicate any specific technical assistance that the incumbent LEC is willing to give to the objectors; and

(4) Provide any other relevant information.

(e) *Resolution.* If an objection is filed pursuant to paragraph (c) of this section, then the Chief, Wireline Competition Bureau, will issue an order determining a reasonable public notice period, provided however, that if an incumbent LEC does not file a response within the time period allotted, or if the incumbent LEC's response accepts the latest implementation date stated by an objector, then the incumbent LEC's public notice shall be deemed amended to specify the implementation date requested by the objector, without further Commission action. An incumbent LEC must amend its public notice to reflect any change in the applicable implementation date pursuant to § 51.329(b).

(f) *Resolution of objections to replacement of copper loops or copper subloops with fiber-to-the-home loops or fiber-to-the-curb loops.* An objection to a notice that an incumbent LEC intends to retire any copper loops or copper subloops and replace such loops or subloops with fiber-to-the-home loops or fiber-to-the-curb loops shall be deemed denied 90 days after the date on which the Commission releases public notice of the incumbent LEC filing, unless the Commission rules otherwise within that time. Until the Commission has either ruled on an objection or the 90-day period for the Commission's consideration has expired, an incumbent LEC may not retire those copper loops or copper subloops at issue for replacement with fiber-to-the-home loops or fiber-to-the-curb loops.

[61 FR 47352, Sept. 6, 1996, as amended at 67 FR 13226, Mar. 21, 2002; 68 FR 52305, Sept. 2, 2003; 69 FR 77954; Dec. 29, 2004]

§ 51.335 Notice of network changes: Confidential or proprietary information.

(a) If an incumbent LEC claims that information otherwise required to be disclosed is confidential or proprietary, the incumbent LEC's public notice must include, in addition to the information identified in § 51.327(a), a statement that the incumbent LEC will make further information available to those signing a nondisclosure agreement.

(b) *Tolling the public notice period.* Upon receipt by an incumbent LEC of a competing service provider's request for disclosure of confidential or proprietary information, the applicable public notice period will be tolled until the parties agree on the terms of a nondisclosure agreement. An incumbent LEC receiving such a request must amend its public notice as follows:

(1) On the date it receives a request from a competing service provider for disclosure of confidential or proprietary information, to state that the notice period is tolled; and

(2) On the date the nondisclosure agreement is finalized, to specify a new implementation date.

[61 FR 47352, Sept. 6, 1996]

Subpart E—Exemptions, Suspensions, and Modifications of Requirements of Section 251 of the Act

§ 51.401 State authority.

A state commission shall determine whether a telephone company is entitled, pursuant to section 251(f) of the Act, to exemption from, or suspension or modification of, the requirements of section 251 of the Act. Such determinations shall be made on a case-by-case basis.

§ 51.403 Carriers eligible for suspension or modification under section 251(f)(2) of the Act.

A LEC is not eligible for a suspension or modification of the requirements of section 251(b) or section 251(c) of the Act pursuant to section 251(f)(2) of the Act if such LEC, at the holding company level, has two percent or more of the subscriber lines installed in the aggregate nationwide.

§ 51.405 Burden of proof.

(a) Upon receipt of a bona fide request for interconnection, services, or access to unbundled network elements, a rural telephone company must prove to the state commission that the rural telephone company should be entitled, pursuant to section 251(f)(1) of the Act, to continued exemption from the requirements of section 251(c) of the Act.

(b) A LEC with fewer than two percent of the nation's subscriber lines installed in the aggregate nationwide must prove to the state commission, pursuant to section 251(f)(2) of the Act, that it is entitled to a suspension or modification of the application of a requirement or requirements of section 251(b) or 251(c) of the Act.

(c) In order to justify continued exemption under section 251(f)(1) of the Act once a bona fide request has been made, an incumbent LEC must offer evidence that the application of the requirements of section 251(c) of the Act would be likely to cause undue economic burden beyond the economic burden that is typically associated with efficient competitive entry.

(d) In order to justify a suspension or modification under section 251(f)(2) of the Act, a LEC must offer evidence that the application of section 251(b) or section 251(c) of the Act would be likely to cause undue economic burden beyond the economic burden that is typically associated with efficient competitive entry.

Subpart F—Pricing of Elements

§ 51.501 Scope.

(a) The rules in this subpart apply to the pricing of network elements, interconnection, and methods of obtaining access to unbundled elements, including physical collocation and virtual collocation.

(b) As used in this subpart, the term ''element'' includes network elements, interconnection, and methods of obtaining interconnection and access to unbundled elements.

§ 51.503 General pricing standard.

(a) An incumbent LEC shall offer elements to requesting telecommunications carriers at rates, terms, and conditions that are just, reasonable, and nondiscriminatory.

(b) An incumbent LEC's rates for each element it offers shall comply with the rate structure rules set forth in §§ 51.507 and 51.509, and shall be established, at the election of the state commission—

(1) Pursuant to the forward-looking economic cost-based pricing methodology set forth in §§ 51.505 and 51.511; or

(2) Consistent with the proxy ceilings and ranges set forth in § 51.513.

(c) The rates that an incumbent LEC assesses for elements shall not vary on the basis of the class of customers served by the requesting carrier, or on the type of services that the requesting carrier purchasing such elements uses them to provide.

§ 51.505 Forward-looking economic cost.

(a) *In general.* The forward-looking economic cost of an element equals the sum of:

(1) The total element long-run incremental cost of the element, as described in paragraph (b); and

(2) A reasonable allocation of forward-looking common costs, as described in paragraph (c).

(b) *Total element long-run incremental cost.* The total element long-run incremental cost of an element is the forward-looking cost over the long run of the total quantity of the facilities and functions that are directly attributable to, or reasonably identifiable as incremental to, such element, calculated taking as a given the incumbent LEC's provision of other elements.

(1) *Efficient network configuration.* The total element long-run incremental cost of an element should be measured based on the use of the most efficient telecommunications technology currently available and the lowest cost network configuration, given the existing location of the incumbent LEC's wire centers.

(2) *Forward-looking cost of capital.* The forward-looking cost of capital shall be used in calculating the total element long-run incremental cost of an element.

(3) *Depreciation rates.* The depreciation rates used in calculating forward-looking economic costs of elements shall be economic depreciation rates.

(c) *Reasonable allocation of forward-looking common costs*—(1) *Forward-looking common costs.* Forward-looking common costs are economic costs efficiently incurred in providing a group of elements or services (which may include all elements or services provided by the incumbent LEC) that cannot be attributed directly to individual elements or services.

(2) *Reasonable allocation.* (i) The sum of a reasonable allocation of forward-looking common costs and the total element long-run incremental cost of an element shall not exceed the stand-alone costs associated with the element. In this context, stand-alone costs are the total forward-looking costs, including corporate costs, that would be incurred to produce a given element if that element were provided by an efficient firm that produced nothing but the given element.

(ii) The sum of the allocation of forward-looking common costs for all elements and services shall equal the total forward-looking common costs, exclusive of retail costs, attributable to operating the incumbent LEC's total network, so as to provide all the elements and services offered.

(d) *Factors that may not be considered.* The following factors shall not be considered in a calculation of the forward-looking economic cost of an element:

(1) *Embedded costs.* Embedded costs are the costs that the incumbent LEC incurred in the past and that are recorded in the incumbent LEC's books of accounts;

(2) *Retail costs.* Retail costs include the costs of marketing, billing, collection, and other costs associated with offering retail telecommunications services to subscribers who are not telecommunications carriers, described in § 51.609;

(3) *Opportunity costs.* Opportunity costs include the revenues that the incumbent LEC would have received for the sale of telecommunications services, in the absence of competition

from telecommunications carriers that purchase elements; and

(4) *Revenues to subsidize other services.* Revenues to subsidize other services include revenues associated with elements or telecommunications service offerings other than the element for which a rate is being established.

(e) *Cost study requirements.* An incumbent LEC must prove to the state commission that the rates for each element it offers do not exceed the forward-looking economic cost per unit of providing the element, using a cost study that complies with the methodology set forth in this section and § 51.511.

(1) A state commission may set a rate outside the proxy ranges or above the proxy ceilings described in § 51.513 only if that commission has given full and fair effect to the economic cost based pricing methodology described in this section and § 51.511 in a state proceeding that meets the requirements of paragraph (e)(2) of this section.

(2) Any state proceeding conducted pursuant to this section shall provide notice and an opportunity for comment to affected parties and shall result in the creation of a written factual record that is sufficient for purposes of review. The record of any state proceeding in which a state commission considers a cost study for purposes of establishing rates under this section shall include any such cost study.

§ 51.507 General rate structure standard.

(a) Element rates shall be structured consistently with the manner in which the costs of providing the elements are incurred.

(b) The costs of dedicated facilities shall be recovered through flat-rated charges.

(c) The costs of shared facilities shall be recovered in a manner that efficiently apportions costs among users. Costs of shared facilities may be apportioned either through usage-sensitive charges or capacity-based flat-rated charges, if the state commission finds that such rates reasonably reflect the costs imposed by the various users.

(d) Recurring costs shall be recovered through recurring charges, unless an incumbent LEC proves to a state commission that such recurring costs are de minimis. Recurring costs shall be considered de minimis when the costs of administering the recurring charge would be excessive in relation to the amount of the recurring costs.

(e) State commissions may, where reasonable, require incumbent LECs to recover nonrecurring costs through recurring charges over a reasonable period of time. Nonrecurring charges shall be allocated efficiently among requesting telecommunications carriers, and shall not permit an incumbent LEC to recover more than the total forward-looking economic cost of providing the applicable element.

(f) State commissions shall establish different rates for elements in at least three defined geographic areas within the state to reflect geographic cost differences.

(1) To establish geographically-deaveraged rates, state commissions may use existing density-related zone pricing plans described in § 69.123 of this chapter, or other such cost-related zone plans established pursuant to state law.

(2) In states not using such existing plans, state commissions must create a minimum of three cost-related rate zones.

[61 FR 45619, Aug. 29, 1996, as amended at 64 FR 32207, June 16, 1999; 64 FR 68637, Dec. 8, 1999]

§ 51.509 Rate structure standards for specific elements.

In addition to the general rules set forth in § 51.507, rates for specific elements shall comply with the following rate structure rules.

(a) *Local loop and subloop.* Loop and subloop costs shall be recovered through flat-rated charges.

(b) *Local switching.* Local switching costs shall be recovered through a combination of a flat-rated charge for line ports and one or more flat-rated or per-minute usage charges for the switching matrix and for trunk ports.

(c) *Dedicated transmission links.* Dedicated transmission link costs shall be recovered through flat-rated charges.

(d) *Shared transmission facilities between tandem switches and end offices.* The costs of shared transmission facilities between tandem switches and end offices may be recovered through

usage-sensitive charges, or in another manner consistent with the manner that the incumbent LEC incurs those costs.

(e) *Tandem switching*. Tandem switching costs may be recovered through usage-sensitive charges, or in another manner consistent with the manner that the incumbent LEC incurs those costs.

(f) *Signaling and call-related database services*. Signaling and call-related database service costs shall be usage-sensitive, based on either the number of queries or the number of messages, with the exception of the dedicated circuits known as signaling links, the cost of which shall be recovered through flat-rated charges.

(g) *Collocation*. Collocation costs shall be recovered consistent with the rate structure policies established in the *Expanded Interconnection* proceeding, CC Docket No. 91–141.

(h) *Network interface device*. An incumbent LEC must establish a price for the network interface device when that unbundled network element is purchased on a stand-alone basis pursuant to § 51.319(c).

[61 FR 45619, Aug. 29, 1996, as amended at 68 FR 52306, Sept. 2, 2003]

§ 51.511 Forward-looking economic cost per unit.

(a) The forward-looking economic cost per unit of an element equals the forward-looking economic cost of the element, as defined in § 51.505, divided by a reasonable projection of the sum of the total number of units of the element that the incumbent LEC is likely to provide to requesting telecommunications carriers and the total number of units of the element that the incumbent LEC is likely to use in offering its own services, during a reasonable measuring period.

(b)(1) With respect to elements that an incumbent LEC offers on a flat-rate basis, the number of units is defined as the discrete number of elements (e.g., local loops or local switch ports) that the incumbent LEC uses or provides.

(2) With respect to elements that an incumbent LEC offers on a usage-sensitive basis, the number of units is defined as the unit of measurement of the usage (e.g., minutes of use or call-related database queries) of the element.

§ 51.513 Proxies for forward-looking economic cost.

(a) A state commission may determine that the cost information available to it with respect to one or more elements does not support the adoption of a rate or rates that are consistent with the requirements set forth in §§ 51.505 and 51.511. In that event, the state commission may establish a rate for an element that is consistent with the proxies specified in this section, provided that:

(1) Any rate established through use of such proxies shall be superseded once the state commission has completed review of a cost study that complies with the forward-looking economic cost based pricing methodology described in §§ 51.505 and 51.511, and has concluded that such study is a reasonable basis for establishing element rates; and

(2) The state commission sets forth in writing a reasonable basis for its selection of a particular rate for the element.

(b) The constraints on proxy-based rates described in this section apply on a geographically averaged basis. For purposes of determining whether geographically deaveraged rates for elements comply with the provisions of this section, a geographically averaged proxy-based rate shall be computed based on the weighted average of the actual, geographically deaveraged rates that apply in separate geographic areas in a state.

(c) *Proxies for specific elements*—(1) *Local loops*. For each state listed below, the proxy-based monthly rate for unbundled local loops, on a statewide weighted average basis, shall be no greater than the figures listed in the table below. (The Commission has not established a default proxy ceiling for loop rates in Alaska.)

TABLE

State	Proxy ceiling
Alabama	$17.25
Arizona	12.85
Arkansas	21.18
California	11.10
Colorado	14.97

TABLE—Continued

State	Proxy ceiling
Connecticut	13.23
Delaware	13.24
District of Columbia	10.81
Florida	13.68
Georgia	16.09
Hawaii	15.27
Idaho	20.16
Illinois	13.12
Indiana	13.29
Iowa	15.94
Kansas	19.85
Kentucky	16.70
Louisiana	16.98
Maine	18.69
Maryland	13.36
Massachusetts	9.83
Michigan	15.27
Minnesota	14.81
Mississippi	21.97
Missouri	18.32
Montana	25.18
Nebraska	18.05
Nevada	18.95
New Hampshire	16.00
New Jersey	12.47
New Mexico	18.66
New York	11.75
North Carolina	16.71
North Dakota	25.36
Ohio	15.73
Oklahoma	17.63
Oregon	15.44
Pennsylvania	12.30
Puerto Rico	12.47
Rhode Island	11.48
South Carolina	17.07
South Dakota	25.33
Tennessee	17.41
Texas	15.49
Utah	15.12
Vermont	20.13
Virginia	14.13
Washington	13.37
West Virginia	19.25
Wisconsin	15.94
Wyoming	25.11

(2) *Local switching.* (i) The blended proxy-based rate for the usage-sensitive component of the unbundled local switching element, including the switching matrix, the functionalities used to provide vertical features, and the trunk ports, shall be no greater than 0.4 cents ($0.004) per minute, and no less than 0.2 cents ($0.002) per minute, except that, where a state commission has, before August 8, 1996, established a rate less than or equal to 0.5 cents ($0.005) per minute, that rate may be retained pending completion of a forward-looking economic cost study. If a flat-rated charge is established for these components, it shall be converted to a per-minute rate by dividing the projected average minutes of use per flat-rated subelement, for purposes of assessing compliance with this proxy. A weighted average of such flat-rate or usage-sensitive charges shall be used in appropriate circumstances, such as when peak and off-peak charges are used.

(ii) The blended proxy-based rate for the line port component of the local switching element shall be no less than $1.10, and no more than $2.00, per line port per month for ports used in the delivery of basic residential and business exchange services.

(3) *Dedicated transmission links.* The proxy-based rates for dedicated transmission links shall be no greater than the incumbent LEC's tariffed interstate charges for comparable entrance facilities or direct-trunked transport offerings, as described in §§69.110 and 69.112 of this chapter.

(4) *Shared transmission facilities between tandem switches and end offices.* The proxy-based rates for shared transmission facilities between tandem switches and end offices shall be no greater than the weighted per-minute equivalent of DS1 and DS3 interoffice dedicated transmission link rates that reflects the relative number of DS1 and DS3 circuits used in the tandem to end office links (or a surrogate based on the proportion of copper and fiber facilities in the interoffice network), calculated using a loading factor of 9,000 minutes per month per voice-grade circuit, as described in §69.112 of this chapter.

(5) *Tandem switching.* The proxy-based rate for tandem switching shall be no greater than 0.15 cents ($0.0015) per minute of use.

(6) *Collocation.* To the extent that the incumbent LEC offers a comparable form of collocation in its interstate expanded interconnection tariffs, as described in §§64.1401 and 69.121 of this chapter, the proxy-based rates for collocation shall be no greater than the effective rates for equivalent services in the interstate expanded interconnection tariff. To the extent that the incumbent LEC does not offer a comparable form of collocation in its interstate expanded interconnection tariffs, a state commission may, in its discretion, establish a proxy-based rate, provided that the state commission sets

forth in writing a reasonable basis for concluding that its rate would approximate the result of a forward-looking economic cost study, as described in § 51.505.

(7) *Signaling, call-related database, and other elements.* To the extent that the incumbent LEC has established rates for offerings comparable to other elements in its interstate access tariffs, and has provided cost support for those rates pursuant to § 61.49(h) of this chapter, the proxy-based rates for those elements shall be no greater than the effective rates for equivalent services in the interstate access tariffs. In other cases, the proxy-based rate shall be no greater than a rate based on direct costs plus a reasonable allocation of overhead loadings, pursuant to § 61.49(h) of this chapter.

[61 FR 45619, Aug. 29, 1996, as amended at 61 FR 52709, Oct. 8, 1996]

§ 51.515 Application of access charges.

(a)–(b) [Reserved]

(c) Notwithstanding §§ 51.505, 51.511, and 51.513(d)(2) and paragraph (a) of this section, an incumbent LEC may assess upon telecommunications carriers that purchase unbundled local switching elements, as described in § 51.319(c)(1), for intrastate toll minutes of use traversing such unbundled local switching elements, intrastate access charges comparable to those listed in paragraph (b) and any explicit intrastate universal service mechanism based on access charges, only until the earliest of the following, and not thereafter:

(1) June 30, 1997;

(2) The effective date of a state commission decision that an incumbent LEC may not assess such charges; or

(3) With respect to a Bell operating company only, the date on which that company is authorized to offer in-region interLATA service in the state pursuant to section 271 of the Act. The end date for Bell operating companies that are authorized to offer interLATA service shall apply only to the recovery of access charges in those states in which the Bell operating company is authorized to offer such service.

(d) Interstate access charges described in part 69 shall not be assessed by incumbent LECs on each element purchased by requesting carriers providing both telephone exchange and exchange access services to such requesting carriers' end users.

[61 FR 45619, Aug. 29, 1996, as amended at 62 FR 45587, Aug. 28, 1997; 71 FR 65750, Nov. 9, 2006]

Subpart G—Resale

§ 51.601 Scope of resale rules.

The provisions of this subpart govern the terms and conditions under which LECs offer telecommunications services to requesting telecommunications carriers for resale.

§ 51.603 Resale obligation of all local exchange carriers.

(a) A LEC shall make its telecommunications services available for resale to requesting telecommunications carriers on terms and conditions that are reasonable and non-discriminatory.

(b) A LEC must provide services to requesting telecommunications carriers for resale that are equal in quality, subject to the same conditions, and provided within the same provisioning time intervals that the LEC provides these services to others, including end users.

§ 51.605 Additional obligations of incumbent local exchange carriers.

(a) An incumbent LEC shall offer to any requesting telecommunications carrier any telecommunications service that the incumbent LEC offers on a retail basis to subscribers that are not telecommunications carriers for resale at wholesale rates that are, at the election of the state commission—

(1) Consistent with the avoided cost methodology described in §§ 51.607 and 51.609; or

(2) Interim wholesale rates, pursuant to § 51.611.

(b) For purposes of this subpart, exchange access services, as defined in section 3 of the Act, shall not be considered to be telecommunications services that incumbent LECs must make available for resale at wholesale rates to requesting telecommunications carriers.

(c) For purposes of this subpart, advanced telecommunications services

sold to Internet Service Providers as an input component to the Internet Service Providers' retail Internet service offering shall not be considered to be telecommunications services offered on a retail basis that incumbent LECs must make available for resale at wholesale rates to requesting telecommunications carriers.

(d) Notwithstanding paragraph (b) of this section, advanced telecommunications services that are classified as exchange access services are subject to the obligations of paragraph (a) of this section if such services are sold on a retail basis to residential and business end-users that are not telecommunications carriers.

(e) Except as provided in § 51.613, an incumbent LEC shall not impose restrictions on the resale by a requesting carrier of telecommunications services offered by the incumbent LEC.

[61 FR 45619, Aug. 29, 1996, as amended at 65 FR 6915, Feb. 11, 2000]

§ 51.607 Wholesale pricing standard.

The wholesale rate that an incumbent LEC may charge for a telecommunications service provided for resale to other telecommunications carriers shall equal the rate for the telecommunications service, less avoided retail costs, as described in section 51.609. For purposes of this subpart, exchange access services, as defined in section 3 of the Act, shall not be considered to be telecommunications services that incumbent LECs must make available for resale at wholesale rates to requesting telecommunications carriers.

[65 FR 6915, Feb. 11, 2000]

§ 51.609 Determination of avoided retail costs.

(a) Except as provided in § 51.611, the amount of avoided retail costs shall be determined on the basis of a cost study that complies with the requirements of this section.

(b) Avoided retail costs shall be those costs that reasonably can be avoided when an incumbent LEC provides a telecommunications service for resale at wholesale rates to a requesting carrier.

(c) For incumbent LECs that are designated as Class A companies under § 32.11 of this chapter, except as provided in paragraph (d) of this section, avoided retail costs shall:

(1) Include as direct costs, the costs recorded in USOA accounts 6611 (product management and sales), 6613 (product advertising), 6621 (call completion services), 6622, (number services), and 6623 (customer services) (§§ 32.6611, 32.6613, 32.6621, 32.6622, and 32.6623 of this chapter);

(2) Include, as indirect costs, a portion of the costs recorded in USOA accounts 6121–6124 (general support expenses), 6720 (corporate operations expenses), and uncollectible telecommunications revenue included in 5300 (uncollectible revenue) (Secs. 32.6121 through 32.6124, 32.6720 and 32.5300 of this chapter); and

(3) Not include plant-specific expenses and plant non-specific expenses, other than general support expenses (§§ 32.6112–6114, 32.6211–6565 of this chapter).

(d) Costs included in accounts 6611, 6613 and 6621–6623 described in paragraph (c) of this section (§§ 32.6611, 32.6613, and 32.6621–6623 of this chapter) may be included in wholesale rates only to the extent that the incumbent LEC proves to a state commission that specific costs in these accounts will be incurred and are not avoidable with respect to services sold at wholesale, or that specific costs in these accounts are not included in the retail prices of resold services. Costs included in accounts 6112–6114 and 6211–6565 described in paragraph (c) of this section (§§ 32.6112–32.6114, 32.6211–32.6565 of this chapter) may be treated as avoided retail costs, and excluded from wholesale rates, only to the extent that a party proves to a state commission that specific costs in these accounts can reasonably be avoided when an incumbent LEC provides a telecommunications service for resale to a requesting carrier.

(e) For incumbent LECs that are designated as Class B companies under § 32.11 of this chapter and that record information in summary accounts instead of specific USOA accounts, the entire relevant summary accounts may

be used in lieu of the specific USOA accounts listed in paragraphs (c) and (d) of this section.

[61 FR 45619, Aug. 29, 1996, as amended at 67 FR 5700, Feb. 6, 2002; 69 FR 53652, Sept. 2, 2004]

§ 51.611 Interim wholesale rates.

(a) If a state commission cannot, based on the information available to it, establish a wholesale rate using the methodology prescribed in § 51.609, then the state commission may elect to establish an interim wholesale rate as described in paragraph (b) of this section.

(b) The state commission may establish interim wholesale rates that are at least 17 percent, and no more than 25 percent, below the incumbent LEC's existing retail rates, and shall articulate the basis for selecting a particular discount rate. The same discount percentage rate shall be used to establish interim wholesale rates for each telecommunications service.

(c) A state commission that establishes interim wholesale rates shall, within a reasonable period of time thereafter, establish wholesale rates on the basis of an avoided retail cost study that complies with § 51.609.

§ 51.613 Restrictions on resale.

(a) Notwithstanding § 51.605(b), the following types of restrictions on resale may be imposed:

(1) *Cross-class selling.* A state commission may permit an incumbent LEC to prohibit a requesting telecommunications carrier that purchases at wholesale rates for resale, telecommunications services that the incumbent LEC makes available only to residential customers or to a limited class of residential customers, from offering such services to classes of customers that are not eligible to subscribe to such services from the incumbent LEC.

(2) *Short term promotions.* An incumbent LEC shall apply the wholesale discount to the ordinary rate for a retail service rather than a special promotional rate only if:

(i) Such promotions involve rates that will be in effect for no more than 90 days; and

(ii) The incumbent LEC does not use such promotional offerings to evade the wholesale rate obligation, for example by making available a sequential series of 90-day promotional rates.

(b) With respect to any restrictions on resale not permitted under paragraph (a), an incumbent LEC may impose a restriction only if it proves to the state commission that the restriction is reasonable and nondiscriminatory.

(c) *Branding.* Where operator, call completion, or directory assistance service is part of the service or service package an incumbent LEC offers for resale, failure by an incumbent LEC to comply with reseller unbranding or rebranding requests shall constitute a restriction on resale.

(1) An incumbent LEC may impose such a restriction only if it proves to the state commission that the restriction is reasonable and nondiscriminatory, such as by proving to a state commission that the incumbent LEC lacks the capability to comply with unbranding or rebranding requests.

(2) For purposes of this subpart, unbranding or rebranding shall mean that operator, call completion, or directory assistance services are offered in such a manner that an incumbent LEC's brand name or other identifying information is not identified to subscribers, or that such services are offered in such a manner that identifies to subscribers the requesting carrier's brand name or other identifying information.

§ 51.615 Withdrawal of services.

When an incumbent LEC makes a telecommunications service available only to a limited group of customers that have purchased such a service in the past, the incumbent LEC must also make such a service available at wholesale rates to requesting carriers to offer on a resale basis to the same limited group of customers that have purchased such a service in the past.

§ 51.617 Assessment of end user common line charge on resellers.

(a) Notwithstanding the provision in § 69.104(a) of this chapter that the end user common line charge be assessed upon end users, an incumbent LEC shall assess this charge, and the charge for changing the designated primary

interexchange carrier, upon requesting carriers that purchase telephone exchange service for resale. The specific end user common line charge to be assessed will depend upon the identity of the end user served by the requesting carrier.

(b) When an incumbent LEC provides telephone exchange service to a requesting carrier at wholesale rates for resale, the incumbent LEC shall continue to assess the interstate access charges provided in part 69 of this chapter, other than the end user common line charge, upon interexchange carriers that use the incumbent LEC's facilities to provide interstate or international telecommunications services to the interexchange carriers' subscribers.

Subpart H—Reciprocal Compensation for Transport and Termination of Telecommunications Traffic

EDITORIAL NOTE: Nomenclature changes to subpart H of part 51 appear at 66 FR 26806, May 15, 2001.

§ 51.700 Purpose of this subpart.

The purpose of this subpart, as revised in 2011 by FCC 11–161 is to establish rules governing the transition of intercarrier compensation from a calling-party's-network pays system to a default bill-and-keep methodology. Following the transition, the exchange of telecommunications traffic between and among service providers will, by default, be governed by bill-and-keep arrangements.

NOTE TO § 51.700: See FCC 11–161, figure 9 (chart identifying steps in the transition).

[76 FR 73854, Nov. 29, 2011]

§ 51.701 Scope of transport and termination pricing rules.

(a) Effective December 29, 2011, compensation for telecommunications traffic exchanged between two telecommunications carriers that is interstate or intrastate exchange access, information access, or exchange services for such access, other than special access, is specified in subpart J of this part. The provisions of this subpart apply to Non-Access Reciprocal Compensation for transport and termination of Non-Access Telecommunications Traffic between LECs and other telecommunications carriers.

(b) *Non-Access Telecommunications Traffic*. For purposes of this subpart, Non-Access Telecommunications Traffic means:

(1) Telecommunications traffic exchanged between a LEC and a telecommunications carrier other than a CMRS provider, except for telecommunications traffic that is interstate or intrastate exchange access, information access, or exchange services for such access (*see* FCC 01–131, paragraphs 34, 36, 39, 42–43); or

(2) Telecommunications traffic exchanged between a LEC and a CMRS provider that, at the beginning of the call, originates and terminates within the same Major Trading Area, as defined in § 24.202(a) of this chapter.

(3) This definition includes telecommunications traffic exchanged between a LEC and another telecommunications carrier in Time Division Multiplexing (TDM) format that originates and/or terminates in IP format and that otherwise meets the definitions in paragraphs (b)(1) or (b)(2) of this section. Telecommunications traffic originates and/or terminates in IP format if it originates from and/or terminates to an end-user customer of a service that requires Internet protocol-compatible customer premises equipment.

(c) *Transport*. For purposes of this subpart, transport is the transmission and any necessary tandem switching of Non-Access Telecommunications Traffic subject to section 251(b)(5) of the Communications Act of 1934, as amended, 47 U.S.C. 251(b)(5), from the interconnection point between the two carriers to the terminating carrier's end office switch that directly serves the called party, or equivalent facility provided by a carrier other than an incumbent LEC.

(d) *Termination*. For purposes of this subpart, termination is the switching of Non-Access Telecommunications Traffic at the terminating carrier's end office switch, or equivalent facility, and delivery of such traffic to the called party's premises.

(e) *Non-Access Reciprocal Compensation.* For purposes of this subpart, a Non-Access Reciprocal Compensation arrangement between two carriers is either a bill-and-keep arrangement, per § 51.713, or an arrangement in which each carrier receives intercarrier compensation for the transport and termination of Non-Access Telecommunications Traffic.

[61 FR 45619, Aug. 29, 1996, as amended at 66 FR 26806, May 15, 2001; 76 FR 73855, Nov. 29, 2011]

§ 51.703 Non-Access reciprocal compensation obligation of LECs.

(a) Each LEC shall establish Non-Access Reciprocal Compensation arrangements for transport and termination of Non-Access Telecommunications Traffic with any requesting telecommunications carrier.

(b) A LEC may not assess charges on any other telecommunications carrier for Non-Access Telecommunications Traffic that originates on the LEC's network.

(c) Notwithstanding any other provision of the Commission's rules, a LEC shall be entitled to assess and collect the full charges for the transport and termination of Non-Access Telecommunications Traffic, regardless of whether the local exchange carrier assessing the applicable charges itself delivers such traffic to the called party's premises or delivers the call to the called party's premises via contractual or other arrangements with an affiliated or unaffiliated provider of interconnected VoIP service, as defined in 47 U.S.C. 153(25), or a non-interconnected VoIP service, as defined in 47 U.S.C. 153(36), that does not itself seek to collect Non-Access Reciprocal Compensation charges for the transport and termination of that Non-Access Telecommunications Traffic. In no event may the total charges that a LEC may assess for such service to the called location exceed the applicable transport and termination rate. For purposes of this section, the facilities used by the LEC and affiliated or unaffiliated provider of interconnected VoIP service or a non-interconnected VoIP service for the transport and termination of such traffic shall be deemed an equivalent facility under § 51.701.

[76 FR 73855, Nov. 29, 2011]

§ 51.705 LECs' rates for transport and termination.

(a) Notwithstanding any other provision of the Commission's rules, by default, transport and termination for Non-Access Telecommunications Traffic exchanged between a local exchange carrier and a CMRS provider within the scope of § 51.701(b)(2) shall be pursuant to a bill-and-keep arrangement, as provided in § 51.713.

(b) Establishment of incumbent LECs' rates for transport and termination:

(1) This provision applies when, in the absence of a negotiated agreement between parties, state commissions establish Non-Access Reciprocal Compensation rates for the exchange of Non-Access Telecommunications Traffic between a local exchange carrier and a telecommunications carrier other than a CMRS provider where the incumbent local exchange carriers did not have any such rates as of December 29, 2011. Any rates established pursuant to this provision apply between December 29, 2011 and the date at which they are superseded by the transition specified in paragraphs (c)(2) through (c)(5) of this section.

(2) An incumbent LEC's rates for transport and termination of telecommunications traffic shall be established, at the election of the state commission, on the basis of:

(i) The forward-looking economic costs of such offerings, using a cost study pursuant to §§ 51.505 and 51.511; or

(ii) A bill-and-keep arrangement, as provided in § 51.713.

(3) In cases where both carriers in a Non-Access Reciprocal Compensation arrangement are incumbent LECs, state commissions shall establish the rates of the smaller carrier on the basis of the larger carrier's forward-looking costs, pursuant to § 51.711.

(c) Except as provided by paragraph (a) of this section, and notwithstanding any other provision of the Commission's rules, default transitional Non-Access Reciprocal Compensation rates shall be determined as follows:

(1) Effective December 29, 2011, no telecommunications carrier may increase a Non-Access Reciprocal Compensation for transport or termination above the level in effect on December 29, 2011. All Bill-and-Keep Arrangements in effect on December 29, 2011 shall remain in place unless both parties mutually agree to an alternative arrangement.

(2) Beginning July 1, 2012, if any telecommunications carrier's Non-Access Reciprocal Compensation rates in effect on December 29, 2011 or established pursuant to paragraph (b) of this section subsequent to December 29, 2011, exceed that carrier's interstate access rates for functionally equivalent services in effect in the same state on December 29, 2011, that carrier shall reduce its reciprocal compensation rate by one half of the difference between the Non-Access Reciprocal Compensation rate and the corresponding functionally equivalent interstate access rate.

(3) Beginning July 1, 2013, no telecommunications carrier's Non-Access Reciprocal Compensation rates shall exceed that carrier's tariffed interstate access rate in effect in the same state on January 1 of that same year, for equivalent functionality.

(4) After July 1, 2018, all Price-Cap Local Exchange Carrier's Non-Access Reciprocal Compensation rates and all non-incumbent LECs that benchmark access rates to Price Cap Carrier shall be set pursuant to Bill-and-Keep arrangements for Non-Access Reciprocal Compensation as defined in this subpart.

(5) After July 1, 2020, all Rate-of-Return Local Exchange Carrier's Non-Access Reciprocal Compensation rates and all non-incumbent LECs that benchmark access rates to Rate-of-Return Carriers shall be set pursuant to Bill-and-Keep arrangements for Non-Access Reciprocal Compensation as defined in this subpart.

[76 FR 73855, Nov. 29, 2011]

§ 51.707 [Reserved]

§ 51.709 Rate structure for transport and termination.

(a) In state proceedings, where a rate for Non-Access Reciprocal Compensation does not exist as of December 29, 2011, a state commission shall establish initial rates for the transport and termination of Non-Access Telecommunications Traffic that are structured consistently with the manner that carriers incur those costs, and consistently with the principles in this section.

(b) The rate of a carrier providing transmission facilities dedicated to the transmission of non-access traffic between two carriers' networks shall recover only the costs of the proportion of that trunk capacity used by an interconnecting carrier to send non-access traffic that will terminate on the providing carrier's network. Such proportions may be measured during peak periods.

(c) For Non-Access Telecommunications Traffic exchanged between a rate-of-return regulated rural telephone company as defined in § 51.5 and a CMRS provider, the rural rate-of-return incumbent local exchange carrier will be responsible for transport to the CMRS provider's interconnection point when it is located within the rural rate-of-return incumbent local exchange carrier's service area. When the CMRS provider's interconnection point is located outside the rural rate-of-return incumbent local exchange carrier's service area, the rural rate-of-return incumbent local exchange carrier's transport and provisioning obligation stops at its meet point and the CMRS provider is responsible for the remaining transport to its interconnection point. This paragraph (c) is a default provision and applicable in the absence of an existing agreement or arrangement otherwise.

[76 FR 73856, Nov. 29, 2011]

§ 51.711 Symmetrical reciprocal compensation.

(a) Rates for transport and termination of Non-Access Telecommunications Traffic shall be symmetrical, unless carriers mutually agree otherwise, except as provided in paragraphs (b) and (c) of this section.

(1) For purposes of this subpart, symmetrical rates are rates that a carrier other than an incumbent LEC assesses upon an incumbent LEC for transport and termination of Non-Access Telecommunications Traffic equal to those

that the incumbent LEC assesses upon the other carrier for the same services.

(2) In cases where both parties are incumbent LECs, or neither party is an incumbent LEC, a state commission shall establish the symmetrical rates for transport and termination based on the larger carrier's forward-looking costs.

(3) Where the switch of a carrier other than an incumbent LEC serves a geographic area comparable to the area served by the incumbent LEC's tandem switch, the appropriate rate for the carrier other than an incumbent LEC is the incumbent LEC's tandem interconnection rate.

(b) Except as provided in § 51.705, a state commission may establish asymmetrical rates for transport and termination of Non-Access Telecommunications Traffic only if the carrier other than the incumbent LEC (or the smaller of two incumbent LECs) proves to the state commission on the basis of a cost study using the forward-looking economic cost based pricing methodology described in §§ 51.505 and 51.511, that the forward-looking costs for a network efficiently configured and operated by the carrier other than the incumbent LEC (or the smaller of two incumbent LECs), exceed the costs incurred by the incumbent LEC (or the larger incumbent LEC), and, consequently, that such that a higher rate is justified.

(c) Pending further proceedings before the Commission, a state commission shall establish the rates that licensees in the Paging and Radiotelephone Service (defined in part 22, subpart E of this chapter), Narrowband Personal Communications Services (defined in part 24, subpart D of this chapter), and Paging Operations in the Private Land Mobile Radio Services (defined in part 90, subpart P of this chapter) may assess upon other carriers for the transport and termination of telecommunications traffic based on the forward-looking costs that such licensees incur in providing such services, pursuant to §§ 51.505 and 51.511. Such licensees' rates shall not be set based on the default proxies described in § 51.707.

[61 FR 45619, Aug. 29, 1996 , as amended at 76 FR 73856, Nov. 29, 2011]

§ 51.713 Bill-and-keep arrangements.

Bill-and-keep arrangements are those in which carriers exchanging telecommunications traffic do not charge each other for specific transport and/or termination functions or services.

[76 FR 73856, Nov. 29, 2011]

§ 51.715 Interim transport and termination pricing.

(a) Upon request from a telecommunications carrier without an existing interconnection arrangement with an incumbent LEC, the incumbent LEC shall provide transport and termination of Non-Access Telecommunications Traffic immediately under an interim arrangement, pending resolution of negotiation or arbitration regarding transport and termination rates and approval of such rates by a state commission under sections 251 and 252 of the Act.

(1) This requirement shall not apply when the requesting carrier has an existing interconnection arrangement that provides for the transport and termination of Non-Access Telecommunications Traffic by the incumbent LEC.

(2) A telecommunications carrier may take advantage of such an interim arrangement only after it has requested negotiation with the incumbent LEC pursuant to § 51.301.

(b) Upon receipt of a request as described in paragraph (a) of this section, an incumbent LEC must, without unreasonable delay, establish an interim arrangement for transport and termination of Non-Access Telecommunications Traffic at symmetrical rates.

(1) In a state in which the state commission has established transport and termination rates based on forward-looking economic cost studies, an incumbent LEC shall use these state-determined rates as interim transport and termination rates.

(2) In a state in which the state commission has not established transport and termination rates based on forward-looking economic cost studies, an incumbent LEC shall set interim transport and termination rates either at the default ceilings specified in § 51.705(c) or in accordance with a bill-and-keep methodology as defined in § 51.713.

(3) In a state in which the state commission has neither established transport and termination rates based on forward-looking economic cost studies nor established transport and termination rates consistent with the default price ranges described in § 51.707, an incumbent LEC shall set interim transport and termination rates at the default ceilings for end-office switching (0.4 cents per minute of use), tandem switching (0.15 cents per minute of use), and transport (as described in § 51.707(b)(2)).

(c) An interim arrangement shall cease to be in effect when one of the following occurs with respect to rates for transport and termination of telecommunications traffic subject to the interim arrangement:

(1) A voluntary agreement has been negotiated and approved by a state commission;

(2) An agreement has been arbitrated and approved by a state commission; or

(3) The period for requesting arbitration has passed with no such request.

(d) If the rates for transport and termination of Non-Access Telecommunications Traffic in an interim arrangement differ from the rates established by a state commission pursuant to § 51.705, the state commission shall require carriers to make adjustments to past compensation. Such adjustments to past compensation shall allow each carrier to receive the level of compensation it would have received had the rates in the interim arrangement equalled the rates later established by the state commission pursuant to § 51.705.

[61 FR 45619, Aug. 29, 1996, as amended at 76 FR 73856, Nov. 29, 2011]

§ 51.717 [Reserved]

Subpart I—Procedures for Implementation of Section 252 of the Act

§ 51.801 Commission action upon a state commission's failure to act to carry out its responsibility under section 252 of the Act.

(a) If a state commission fails to act to carry out its responsibility under section 252 of the Act in any proceeding or other matter under section 252 of the Act, the Commission shall issue an order preempting the state commission's jurisdiction of that proceeding or matter within 90 days after being notified (or taking notice) of such failure, and shall assume the responsibility of the state commission under section 252 of the Act with respect to the proceeding or matter and shall act for the state commission.

(b) For purposes of this part, a state commission fails to act if the state commission fails to respond, within a reasonable time, to a request for mediation, as provided for in section 252(a)(2) of the Act, or for a request for arbitration, as provided for in section 252(b) of the Act, or fails to complete an arbitration within the time limits established in section 252(b)(4)(C) of the Act.

(c) A state shall not be deemed to have failed to act for purposes of section 252(e)(5) of the Act if an agreement is deemed approved under section 252(e)(4) of the Act.

§ 51.803 Procedures for Commission notification of a state commission's failure to act.

(a) Any party seeking preemption of a state commission's jurisdiction, based on the state commission's failure to act, shall notify the Commission in accordance with following procedures:

(1) Such party shall file with the Secretary of the Commission a petition, supported by an affidavit, that states with specificity the basis for the petition and any information that supports the claim that the state has failed to act, including, but not limited to, the applicable provisions of the Act and the factual circumstances supporting a finding that the state commission has failed to act;

(2) Such party shall ensure that the state commission and the other parties to the proceeding or matter for which preemption is sought are served with the petition required in paragraph (a)(1) of this section on the same date that the petitioning party serves the petition on the Commission; and

(3) Within fifteen days from the date of service of the petition required in paragraph (a)(1) of this section, the applicable state commission and parties

to the proceeding may file with the Commission a response to the petition.

(b) The party seeking preemption must prove that the state has failed to act to carry out its responsibilities under section 252 of the Act.

(c) The Commission, pursuant to section 252(e)(5) of the Act, may take notice upon its own motion that a state commission has failed to act. In such a case, the Commission shall issue a public notice that the Commission has taken notice of a state commission's failure to act. The applicable state commission and the parties to a proceeding or matter in which the Commission has taken notice of the state commission's failure to act may file, within fifteen days of the issuance of the public notice, comments on whether the Commission is required to assume the responsibility of the state commission under section 252 of the Act with respect to the proceeding or matter.

(d) The Commission shall issue an order determining whether it is required to preempt the state commission's jurisdiction of a proceeding or matter within 90 days after being notified under paragraph (a) of this section or taking notice under paragraph (c) of this section of a state commission's failure to carry out its responsibilities under section 252 of the Act.

§ 51.805 The Commission's authority over proceedings and matters.

(a) If the Commission assumes responsibility for a proceeding or matter pursuant to section 252(e)(5) of the Act, the Commission shall retain jurisdiction over such proceeding or matter. At a minimum, the Commission shall approve or reject any interconnection agreement adopted by negotiation, mediation or arbitration for which the Commission, pursuant to section 252(e)(5) of the Act, has assumed the state's commission's responsibilities.

(b) Agreements reached pursuant to mediation or arbitration by the Commission pursuant to section 252(e)(5) of the Act are not required to be submitted to the state commission for approval or rejection.

§ 51.807 Arbitration and mediation of agreements by the Commission pursuant to section 252(e)(5) of the Act.

(a) The rules established in this section shall apply only to instances in which the Commission assumes jurisdiction under section 252(e)(5) of the Act.

(b) When the Commission assumes responsibility for a proceeding or matter pursuant to section 252(e)(5) of the Act, it shall not be bound by state laws and standards that would have applied to the state commission in such proceeding or matter.

(c) In resolving, by arbitration under section 252(b) of the Act, any open issues and in imposing conditions upon the parties to the agreement, the Commission shall:

(1) Ensure that such resolution and conditions meet the requirements of section 251 of the Act, including the rules prescribed by the Commission pursuant to that section;

(2) Establish any rates for interconnection, services, or network elements according to section 252(d) of the Act, including the rules prescribed by the Commission pursuant to that section; and

(3) Provide a schedule for implementation of the terms and conditions by the parties to the agreement.

(d) An arbitrator, acting pursuant to the Commission's authority under section 252(e)(5) of the Act, shall use final offer arbitration, except as otherwise provided in this section:

(1) At the discretion of the arbitrator, final offer arbitration may take the form of either entire package final offer arbitration or issue-by-issue final offer arbitration.

(2) Negotiations among the parties may continue, with or without the assistance of the arbitrator, after final arbitration offers are submitted. Parties may submit subsequent final offers following such negotiations.

(3) To provide an opportunity for final post-offer negotiations, the arbitrator will not issue a decision for at least fifteen days after submission to the arbitrator of the final offers by the parties.

(e) Final offers submitted by the parties to the arbitrator shall be consistent with section 251 of the Act, including the rules prescribed by the Commission pursuant to that section.

(f) Each final offer shall:

(1) Meet the requirements of section 251, including the rules prescribed by the Commission pursuant to that section;

(2) Establish rates for interconnection, services, or access to unbundled network elements according to section 252(d) of the Act, including the rules prescribed by the Commission pursuant to that section; and

(3) Provide a schedule for implementation of the terms and conditions by the parties to the agreement. If a final offer submitted by one or more parties fails to comply with the requirements of this section or if the arbitrator determines in unique circumstances that another result would better implement the Communications Act, the arbitrator has discretion to take steps designed to result in an arbitrated agreement that satisfies the requirements of section 252(c) of the Act, including requiring parties to submit new final offers within a time frame specified by the arbitrator, or adopting a result not submitted by any party that is consistent with the requirements of section 252(c) of the Act, and the rules prescribed by the Commission pursuant to that section.

(g) Participation in the arbitration proceeding will be limited to the requesting telecommunications carrier and the incumbent LEC, except that the Commission will consider requests by third parties to file written pleadings.

(h) Absent mutual consent of the parties to change any terms and conditions adopted by the arbitrator, the decision of the arbitrator shall be binding on the parties.

[61 FR 45619, Aug. 29, 1996, as amended at 66 FR 8520, Feb. 1, 2001]

§ 51.809 Availability of agreements to other telecommunications carriers under section 252(i) of the Act.

(a) An incumbent LEC shall make available without unreasonable delay to any requesting telecommunications carrier any agreement in its entirety to which the incumbent LEC is a party that is approved by a state commission pursuant to section 252 of the Act, upon the same rates, terms, and conditions as those provided in the agreement. An incumbent LEC may not limit the availability of any agreement only to those requesting carriers serving a comparable class of subscribers or providing the same service (*i.e.*, local, access, or interexchange) as the original party to the agreement.

(b) The obligations of paragraph (a) of this section shall not apply where the incumbent LEC proves to the state commission that:

(1) The costs of providing a particular agreement to the requesting telecommunications carrier are greater than the costs of providing it to the telecommunications carrier that originally negotiated the agreement, or

(2) The provision of a particular agreement to the requesting carrier is not technically feasible.

(c) Individual agreements shall remain available for use by telecommunications carriers pursuant to this section for a reasonable period of time after the approved agreement is available for public inspection under section 252(h) of the Act.

[69 FR 43771, July 22, 2004]

Subpart J—Transitional Access Service Pricing

SOURCE: 76 FR 73856, Nov. 29, 2011, unless otherwise noted.

§ 51.901 Purpose and scope of transitional access service pricing rules.

(a) The purpose of this section is to establish rules governing the transition of intercarrier compensation from a calling-party's-network pays system to a default bill-and-keep methodology. Following the transition, the exchange of traffic between and among service providers will, by default, be governed by bill-and-keep arrangements.

(b) Effective December 29, 2011, the provisions of this subpart apply to reciprocal compensation for telecommunications traffic exchanged between telecommunications providers that is interstate or intrastate exchange access, information access, or

exchange services for such access, other than special access.

NOTE TO § 51.901: See FCC 11–161, figure 9 (chart identifying steps in the transition).

§ 51.903 Definitions.

For the purposes of this subpart:

(a) *Competitive Local Exchange Carrier*. A *Competitive Local Exchange Carrier* is any local exchange carrier, as defined in § 51.5, that is not an incumbent local exchange carrier .

(b) *Composite Terminating End Office Access Rate* means terminating End Office Access Service revenue, calculated using demand for a given time period, divided by end office switching minutes for the same time period.

(c) *Dedicated Transport Access Service* means originating and terminating transport on circuits dedicated to the use of a single carrier or other customer provided by an incumbent local exchange carrier or any functional equivalent of the incumbent local exchange carrier access service provided by a non-incumbent local exchange carrier. *Dedicated Transport Access Service* rate elements for an incumbent local exchange carrier include the entrance facility rate elements specified in § 69.110 of this chapter, the dedicated transport rate elements specified in § 69.111 of this chapter, the direct-trunked transport rate elements specified in § 69.112 of this chapter, and the intrastate rate elements for functionally equivalent access services. Dedicated Transport Access Service rate elements for a non-incumbent local exchange carrier include any functionally equivalent access services.

(d) *End Office Access Service* means:

(1) The switching of access traffic at the carrier's end office switch and the delivery to or from of such traffic to the called party's premises;

(2) The routing of interexchange telecommunications traffic to or from the called party's premises, either directly or via contractual or other arrangements with an affiliated or unaffiliated entity, regardless of the specific functions provided or facilities used; or

(3) Any functional equivalent of the incumbent local exchange carrier access service provided by a non-incumbent local exchange carrier. End Office Access Service rate elements for an incumbent local exchange carrier include the local switching rate elements specified in § 69.106 of this chapter, the carrier common line rate elements specified in § 69.154 of this chapter, and the intrastate rate elements for functionally equivalent access services. End Office Access Service rate elements for an incumbent local exchange carrier also include any rate elements assessed on local switching access minutes, including the information surcharge and residual rate elements. End office Access Service rate elements for a non-incumbent local exchange carrier include any functionally equivalent access service.

NOTE TO PARAGRAPH (d): For incumbent local exchange carriers, residual rate elements may include, for example, state Transport Interconnection Charges, Residual Interconnection Charges, and PICCs. For non-incumbent local exchange carriers, residual rate elements may include any functionally equivalent access service.

(e) *Fiscal Year 2011* means October 1, 2010 through September 30, 2011.

(f) *Price Cap Carrier* has the same meaning as that term is defined in § 61.3(aa) of this chapter.

(g) *Rate-of-Return Carrier* is any incumbent local exchange carrier not subject to price cap regulation as that term is defined in § 61.3(aa) of this chapter, but only with respect to the territory in which it operates as an incumbent local exchange carrier.

(h) *Access Reciprocal Compensation* means telecommunications traffic exchanged between telecommunications service providers that is interstate or intrastate exchange access, information access, or exchange services for such access, other than special access.

(i) *Tandem-Switched Transport Access Service* means:

(1) Tandem switching and common transport between the tandem switch and end office; or

(2) Any functional equivalent of the incumbent local exchange carrier access service provided by a non-incumbent local exchange carrier via other facilities. *Tandem-Switched Transport* rate elements for an incumbent local exchange carrier include the rate elements specified in § 69.111 of this chapter, except for the dedicated transport rate elements specified in that section,

and intrastate rate elements for functionally equivalent service. Tandem Switched Transport Access Service rate elements for a non-incumbent local exchange carrier include any functionally equivalent access service.

(j) *Transitional Intrastate Access Service* means terminating End Office Access Service that was subject to intrastate access rates as of December 31, 2011; terminating Tandem-Switched Transport Access Service that was subject to intrastate access rates as of December 31, 2011; and originating and terminating Dedicated Transport Access Service that was subject to intrastate access rates as of December 31, 2011.

§ 51.905 Implementation.

(a) The rates set forth in this section are default rates. Notwithstanding any other provision of the Commission's rules, telecommunications carriers may agree to rates different from the default rates.

(b) LECs who are otherwise required to file tariffs are required to tariff rates no higher than the default transitional rates specified by this subpart.

(1) With respect to interstate switched access services governed by this subpart, LECs shall tariff rates for those services in their federal tariffs. Except as expressly superseded below, LECs shall follow the procedures specified in part 61 of this chapter when filing such tariffs.

(2) With respect to Transitional Intrastate Access Services governed by this subpart, LECs shall follow the procedures specified by relevant state law when filing such tariffs, price lists or other instrument (referred to collectively as ''tariffs'').

(c) Nothing in this section shall be construed to require a carrier to file or maintain a tariff or to amend an existing tariff if it is not otherwise required to do so under applicable law.

§ 51.907 Transition of price cap carrier access charges.

(a) Notwithstanding any other provision of the Commission's rules, on December 29, 2011, a Price Cap Carrier shall cap the rates for all interstate and intrastate rate elements for services contained in the definitions of Interstate End Office Access Services, Tandem Switched Transport Access Services, and Dedicated Transport Access Services. In addition, a Price Cap Carrier shall also cap the rates for any interstate and intrastate rate elements in the traffic sensitive basket'' and the ''trunking basket'' as described in 47 CFR 61.42(d)(2) and (3) to the extent that such rate elements are not contained in the definitions of Interstate End Office Access Services, Tandem Switched Transport Access Services, and Dedicated Transport Access Services. Carriers will remove these services from price cap regulation in their July 1, 2012 annual tariff filing.

(b) *Step 1.* Beginning July 1, 2012, notwithstanding any other provision of the Commission's rules:

(1) Each Price Cap Carrier shall file tariffs, in accordance with § 51.905(b)(2), with the appropriate state regulatory authority, that set forth the rates applicable to Transitional Intrastate Access Service in each state in which it provides Transitional Intrastate Access Service.

(2) Each Price Cap Carrier shall establish the rates for Transitional Intrastate Access Service using the following methodology:

(i) Calculate total revenue from Transitional Intrastate Access Service at the carrier's interstate access rates in effect on December 29, 2011, using Fiscal Year 2011 intrastate switched access demand for each rate element.

(ii) Calculate total revenue from Transitional Intrastate Access Service at the carrier's intrastate access rates in effect on December 29, 2011, using Fiscal Year 2011 intrastate switched access demand for each rate element.

(iii) Calculate the Step 1 Access Revenue Reduction. The Step 1 Access Revenue Reduction is equal to one-half of the difference between the amount calculated in paragraph (b)(2)(i) of this section and the amount calculated in paragraph (b)(2)(ii) of this section.

(iv) A Price Cap Carrier may elect to establish rates for Transitional Intrastate Access Service using its intrastate access rate structure. Carriers using this option shall establish rates for Transitional Intrastate Access Service such that Transitional Intrastate Access Service revenue at the

proposed rates is no greater than Transitional Intrastate Access Service revenue at the intrastate rates in effect as of December 29, 2011 less the Step 1 Access Revenue Reduction, using Fiscal Year 2011 demand. Carriers electing to establish rates for Transitional Intrastate Access Service in this manner shall notify the appropriate state regulatory authority of their election in the filing required by § 51.907(b)(1).

(v) A Price Cap Carrier may elect to apply its interstate access rate structure and interstate rates to Transitional Intrastate Access Service. In addition to applicable interstate access rates, the carrier may, between July 1, 2012 and July 1, 2013, assess a transitional per-minute charge on Transitional Intrastate Access Service end office switching minutes (previously billed as intrastate access). The transitional per-minute charge shall be no greater than the Step 1 Access Revenue Reduction divided by Fiscal Year 2011 Transitional Intrastate Access Service end office switching minutes. Carriers electing to establish rates for Transitional Intrastate Access Service in this manner shall notify the appropriate state regulatory authority of their election in the filing required by paragraph (b)(1) of this section.

(vi) Except as provided in paragraph (b)(3) of this section, nothing in this section obligates or allows a Price Cap Carrier that has intrastate rates lower than its functionally equivalent interstate rates to make any intrastate tariff filing or intrastate tariff revisions to increase such rates.

(3) If a Price Cap Carrier must make an intrastate switched access rate reduction pursuant to paragraph (b)(2) of this section, and that Price Cap Carrier has an intrastate rate for a rate element that is below the comparable interstate rate for that element, the Price Cap Carrier shall:

(i) Increase the rate for any intrastate rate element that is below the comparable interstate rate for that element to the interstate rate no later than July 1, 2013;

(ii) Include any increases made pursuant to paragraph (b)(3)(i) of this section in the calculation of its eligible recovery for 2012.

(c) *Step 2*. Beginning July 1, 2013, notwithstanding any other provision of the Commission's rules:

(1) Transitional Intrastate Access Service rates shall be no higher than the Price Cap Carrier's interstate access rates. Once the Price Cap Carrier's Transitional Intrastate Access Service rates are equal to its functionally equivalent interstate access rates, they shall be subject to the same rate structure and all subsequent rate and rate structure modifications. Except as provided in paragraph (c)(4) of this section, nothing in this section obligates or allows a Price Cap Carrier that has intrastate rates lower than its functionally equivalent interstate rates to make any intrastate tariff filing or intrastate tariff revisions to increase such rates.

(2) In cases where a Price Cap Carrier does not have intrastate rates that permit it to determine composite intrastate End Office Access Service rates, the carrier shall establish End Office Access Service rates such that the ratio between its composite intrastate End Office Access Service revenues and its total intrastate switched access revenues may not exceed the ratio between its composite interstate End Office Access Service revenues and its total interstate switched access revenues.

(3) [Reserved]

(4) If a Price Cap Carrier made an intrastate switched access rate reduction in 2012 pursuant to paragraph (b)(2) of this section, and that Price Cap Carrier has an intrastate rate for a rate element that is below the comparable interstate rate for that element, the Price Cap Carrier shall:

(i) Increase the rate for any intrastate rate element that is below the comparable interstate rate for that element to the interstate rate on July 1, 2013; and

(ii) Include any increases made pursuant to paragraph (b)(4)(i) of this section in the calculation of its eligible recovery for 2013.

(d) *Step 3*. Beginning July 1, 2014, notwithstanding any other provision of the Commission's rules:

(1) A Price Cap Carrier shall establish separate originating and terminating

rate elements for all per-minute components within interstate and intrastate End Office Access Service. For fixed charges, the Price Cap Carrier shall divide the rate between originating and terminating rate elements based on relative originating and terminating end office switching minutes. If sufficient originating and terminating end office switching minute data is not available, the carrier shall divide such charges equally between originating and terminating elements.

(2) Each Price Cap Carrier shall establish rates for interstate or intrastate terminating End Office Access Service using the following methodology:

(i) Each Price Cap Carrier shall calculate the 2011 Baseline Composite Terminating End Office Access Rate. The 2011 Baseline Composite Terminating End Office Access Rate means the Composite Terminating End Office Access Rate calculated using Fiscal Year 2011 interstate demand multiplied by the interstate End Office Access Service rates at the levels in effect on December 29, 2011, and then dividing the result by 2011 Fiscal Year interstate local switching demand.

(ii) Each Price Cap Carrier shall calculate its 2014 Target Composite Terminating End Office Access Rate. The 2014 Target Composite Terminating End Office Access Rate means $0.0007 per minute plus two-thirds of any difference between the 2011 Baseline Composite Terminating End Office Access Rate and $0.0007 per minute.

(iii) Beginning July 1, 2014, no Price Cap Carrier's interstate Composite Terminating End Office Access Rate shall exceed its 2014 Target Composite Terminating End Office Access Rate. A price cap carrier shall determine compliance by calculating interstate Composite Terminating End Office Access Rates using the relevant Fiscal Year 2011 interstate demand multiplied by the respective interstate rates as of July 1, 2014, and then dividing the result by the relevant 2011 Fiscal Year interstate terminating local switching demand. A price cap carrier's intrastate terminating end office access rates may not exceed the comparable interstate terminating end office access rates. In the alternative, any Price Cap Carrier may elect to implement a single per minute rate element for both interstate and intrastate terminating End Office Access Service no greater than the 2014 Target Composite Terminating End Office Access Rate if its intrastate terminating end office access rates would be at rate parity with its interstate terminating end office access rates.

(e) *Step 4*. Beginning July 1, 2015, notwithstanding any other provision of the Commission's rules:

(1) Each Price Cap Carrier shall establish interstate or intrastate rates for terminating End Office Access Service using the following methodology:

(i) Each Price Cap Carrier shall calculate its 2015 Target Composite Terminating End Office Access Rate. The 2015 Target Composite Terminating End Office Access Rate means $0.0007 per minute plus one-third of any difference between the 2011 Composite Terminating End Office Access Rate and $0.0007 per minute.

(ii) Beginning July 1, 2015, no Price Cap Carrier's interstate Composite Terminating End Office Access Rate shall exceed its 2015 Target Composite Terminating End Office Access Rate. A price cap carrier shall determine compliance by calculating interstate Composite Terminating End Office Access Rates using the relevant Fiscal Year 2011 interstate demand multiplied by the respective interstate rates as of July 1, 2015, and then dividing the result by the relevant 2011 Fiscal Year interstate terminating local switching demand. A price cap carrier's intrastate terminating end office access rates may not exceed the comparable interstate terminating end office access rates. In the alternative, any Price Cap Carrier may elect to implement a single per minute rate element for both interstate and intrastate terminating End Office Access Service no greater than the 2015 Target Composite Terminating End Office Access Rate if its intrastate terminating end office access rates would be at rate parity with its interstate terminating end office access rates.

(2) Nothing in this section obligates or allows a Price Cap Carrier that has

intrastate rates lower than its functionally equivalent interstate rates to make any intrastate tariff filing or intrastate tariff revisions raising such rates.

(f) *Step 5*. Beginning July 1, 2016, notwithstanding any other provision of the Commission's rules, each Price Cap Carrier shall establish interstate terminating End Office Access Service rates such that its Composite Terminating End Office Access Service rate does not exceed $0.0007 per minute. A price cap carrier shall determine compliance by calculating interstate Composite Terminating End Office Access Rates using the relevant Fiscal Year 2011 interstate demand multiplied by the respective interstate rates as of July 1, 2016, and then dividing the result by the relevant 2011 Fiscal Year interstate terminating local switching demand. A price cap carrier's intrastate terminating end office access rates may not exceed the comparable interstate terminating end office access rates. In the alternative, any Price Cap Carrier may elect to implement a single per-minute rate element for both interstate and intrastate Terminating End Office Access Service no greater than the 2016 Target Composite Terminating End Office Access Rate if its intrastate terminating end office access rates would be at rate parity with its interstate terminating end office access rates. Nothing in this section obligates or allows a Price Cap Carrier that has intrastate rates lower than its functionally equivalent interstate rates to make any intrastate tariff filing or intrastate tariff revisions raising such rates.

(g) *Step 6*. Beginning July 1, 2017, notwithstanding any other provision of the Commission's rules:

(1) Each Price Cap Carrier shall, in accordance with a bill-and-keep methodology, refile its interstate access tariffs and any state tariffs, in accordance with § 51.905(b)(2), removing any intercarrier charges for terminating End Office Access Service.

(2) Each Price Cap Carrier shall establish, for interstate and intrastate terminating traffic traversing a tandem switch that the terminating carrier or its affiliates owns, Tandem-Switched Transport Access Service rates no greater than $0.0007 per minute.

(3) Nothing in this section obligates or allows a Price Cap Carrier that has intrastate rates lower than its functionally equivalent interstate rates to make any intrastate tariff filing or intrastate tariff revisions raising such rates.

(h) *Step 7*. Beginning July 1, 2018, notwithstanding any other provision of the Commission's rules, each Price Cap carrier shall, in accordance with bill-and-keep, as defined in § 51.713, revise and refile its interstate switched access tariffs and any state tariffs to remove any intercarrier charges applicable to terminating tandem-switched access service traversing a tandem switch that the terminating carrier or its affiliate owns.

[76 FR 73856, Nov. 29, 2011, as amended at 77 FR 48452, Aug. 14, 2012; 79 FR 28844, May 20, 2014]

§ 51.909 Transition of rate-of-return carrier access charges.

(a) Notwithstanding any other provision of the Commission's rules, on December 29, 2011, a Rate-of-Return Carrier shall:

(1) Cap the rates for all rate elements for services contained in the definitions of End Office Access Service, Tandem Switched Transport Access Service, and Dedicated Transport Access Service, as well as all other interstate switched access rate elements, in its interstate switched access tariffs at the rate that was in effect on the December 29, 2011; and

(2) Cap, in accordance with § 51.505(b)(2), the rates for rate all elements in its intrastate switched access tariffs associated with the provision of terminating End Office Access Service and terminating Tandem-Switched Transport Access Service at the rates that were in effect on the December 29, 2011,

(i) Using the terminating rates if specifically identified; or

(ii) Using the rate for the applicable rate element if the tariff does not distinguish between originating and terminating.

(3) Except as provided in paragraphs (a)(6) and (b)(4) of this section, nothing in this section obligates or allows a

Rate-of-Return Carrier that has intrastate rates lower than its functionally equivalent interstate rates to make any intrastate tariff filing or intrastate tariff revisions raising such rates.

(4) Notwithstanding the requirements of paragraph (a)(1) of this section, if a Rate-of-Return Carrier enters or exits the National Exchange Carrier Association (Association), as defined in § 69.2(d) of this chapter, traffic-sensitive tariff pursuant to the provisions of § 69.3(e)(6) of this chapter, the Association shall adjust its switched access rate caps referenced in paragraph (a)(1) of this section.

(i) For each entering Rate-of-Return Carrier, the Association shall:

(A) Determine each entering Rate-of-Return Carrier's interstate switched access revenues for the preceding calendar year;

(B) Determine the revenues that would have been realized by the entering Rate-of-Return Carrier in the preceding calendar year if it had used the Association's switched access rates (employing the rates for the appropriate bands) as of December 31 of the preceding year and the entering Rate-of-Return Carrier's switched access demand used to determine switched access revenues under paragraph (a)(4)(i)(A) of this section; and

(C) Subtract the sum of the revenues determined pursuant to paragraph (a)(4)(i)(B) of this section from the sum of the revenues determined pursuant to paragraph (a)(4)(i)(A) of this section.

(ii) The Association shall determine the amount by which each exiting Rate-of-Return Carrier is a net contributor or net recipient to or from the switched access segment of the Association pool as follows:

(A) The Association shall calculate the difference between each exiting Rate-of-Return Carrier's 2011–2012 tariff year projected interstate switched access revenues excluding Local Switching Support and the Rate-of-Return Carrier's projected switched access pool settlements excluding Local Switching Support for the same period with a net contribution amount being treated as a positive amount and a net recipient amount being treated as a negative amount. The Association shall divide the calculated difference by the Rate-of-Return Carrier's 2011–2012 tariff year projected interstate switched access revenues excluding Local Switching Support to produce a percent net contribution or net receipt factor.

(B) The Association shall multiply the factor calculated in paragraph (a)(4)(ii)(A) of this section by the Rate-of-Return Carrier's switched access revenues for the preceding calendar year to yield the amount of the Rate-of-Return Carrier's net contribution or net receipts for the calendar year.

(iii) To determine the Association's adjusted switched access rate caps, the Association shall:

(A) Add the amounts calculated under paragraphs (a)(4)(i) and (a)(4)(ii) of this section;

(B) Divide the amount determined in paragraph (a)(4)(iii)(A) of this section by the preceding year's switched access revenues of the Rate-of-Return Carriers that will participate in the Association traffic-sensitive tariff for the next annual tariff period;

(C) The Association shall proportionately adjust its June 30 switched access rate caps by the percentage amount determined in paragraph (a)(4)(iii)(B) of this section.

(iv) The interstate switched access rate caps determined pursuant to paragraph (a)(4)(iii)(C) of this section shall be the new capped interstate switched access rates for purposes of § 51.909(a). The Association shall provide support in its annual access tariff filing to justify the revised interstate switched access rate caps, the Access Recovery Charges that will be assessed, and the amount of Connect America Fund ICC support each carrier will be eligible to receive.

(5) A Rate-of-Return Carrier exiting the Association traffic-sensitive tariff pursuant to § 69.3(e)(6) of this chapter must establish new switched access rate caps as follows:

(i) The Rate-of-Return Carrier shall multiply the factor determined in paragraph (a)(4)(ii)(A) of this section by negative one and then proportionately adjust the Association's capped switched access rates as of the date preceding the effective date of the exiting Rate-of-Return Carrier's next annual tariff filing by this percentage.

A Rate-of-Return Carrier that was a net contributor to the pool will have rate caps that are lower than the Association's switched access rate caps, while a net recipient will have switched access rate caps that are higher than the Association's switched access rate caps;

(ii) The interstate switched access rate caps determined pursuant to paragraph (a)(5)(i) of this section shall be the new capped interstate switched access rates of the exiting Rate-of-Return Carrier for purposes of § 51.909(a). An exiting Rate-of-Return Carrier shall provide support in its annual access tariff filing to justify the revised interstate switched access rate caps, the Access Recovery Charges that will be assessed, and the amount of Connect America Fund ICC support the carrier will be eligible to receive.

(6) If the Association revises its interstate switched access rate caps pursuant to paragraph (a)(4) of this section, each Rate-of-Return Carrier participating in the upcoming annual Association traffic-sensitive tariff shall:

(i) Revise any of its intrastate switched access rates that would have reached parity with its interstate switched access rates in 2013 to parity with the revised interstate switched access rate levels;

(ii) The Association shall provide Rate-of-Return Carriers that are participating in the Association traffic-sensitive pool with notice of any revisions the Association proposes under paragraph (a)(4) of this section no later than May 1.

(b) *Step 1.* Beginning July 1, 2012, notwithstanding any other provision of the Commission's rules:

(1) Each Rate-of-Return Carrier shall file intrastate access tariff provisions, in accordance with § 51.505(b)(2), that set forth the rates applicable to Transitional Intrastate Access Service in each state in which it provides Transitional Intrastate Access Service.

(2) Each Rate-of-Return Carrier shall establish the rates for Transitional Intrastate Access Service using the following methodology:

(i) Calculate total revenue from Transitional Intrastate Access Service at the carrier's interstate access rates in effect on December 29, 2011, using Fiscal Year 2011 intrastate switched access demand for each rate element.

(ii) Calculate total revenue from Transitional Intrastate Access Service at the carrier's intrastate access rates in effect on December 29, 2011, using Fiscal Year 2011 intrastate switched access demand for each rate element.

(iii) Calculate the Step 1 Access Revenue Reduction. The Step 1 Access Revenue Reduction is equal to one-half of the difference between the amount calculated in (b)(2)(i) of this section and the amount calculated in (b)(2)(ii) of this section.

(iv) A Rate-of-Return Carrier may elect to establish rates for Transitional Intrastate Access Service using its intrastate access rate structure. Carriers using this option shall establish rates for Transitional Intrastate Access Service such that Transitional Intrastate Access Service revenue at the proposed rates is no greater than Transitional Intrastate Access Service revenue at the intrastate rates in effect as of December 29, 2011 less the Step 1 Access Revenue Reduction, using Fiscal Year 2011 intrastate switched access demand. Carriers electing to establish rates for Transitional Intrastate Access Service in this manner shall notify the appropriate state regulatory authority of their election in the filing required by § 51.907(b)(1).

(v) A Rate-of-Return Carrier may elect to apply its interstate access rate structure and interstate rates to Transitional Intrastate Access Service. In addition to applicable interstate access rates, the carrier may, between July 1, 2012 and July 1, 2013, assess a transitional per-minute charge on Transitional Intrastate Access Service end office switching minutes (previously billed as intrastate access). The transitional per-minute charge shall be no greater than the Step 1 Access Revenue Reduction divided by Fiscal Year 2011 Transitional Intrastate Access Service end office switching minutes. Carriers electing to establish rates for Transitional Intrastate Access Service in this manner shall notify the appropriate state regulatory authority of their election in the filing required by § 51.907(b)(1).

(3) Except as provided in paragraph (b)(4) of this section, nothing in this

section obligates or allows a Rate-of-Return carrier that has intrastate rates lower than its functionally equivalent interstate rates to make any intrastate tariff filing or intrastate tariff revisions raising such rates.

(4) If a Rate-of-Return Carrier must make an intrastate switched access rate reduction pursuant to paragraph (b)(2) of this section, and that Rate-of-Return Carrier has an intrastate rate for a rate element that is below the comparable interstate rate for that element, the Rate-of-Return Carrier shall:

(i) Increase the rate for any intrastate rate element that is below the comparable interstate rate for that element to the interstate rate no later than July 1, 2013;

(ii) Include any increases made pursuant to paragraph (b)(4)(i) of this section in the calculation of its eligible recovery for 2012.

(c) *Step 2*. Beginning July 1, 2013, notwithstanding any other provision of the Commission's rules:

(1) Transitional Intrastate Access Service rates shall be no higher than the Rate-of-Return Carrier's interstate Terminating End Office Access Service, Terminating Tandem-Switched Transport Access Service, and Originating and Terminating Dedicated Transport Access Service rates and subject to the same rate structure and all subsequent rate and rate structure modifications. Except as provided in paragraph (c)(2) of this section, nothing in this section obligates or allows a Rate-of-Return Carrier that has intrastate rates lower than its functionally equivalent interstate rates to make any intrastate tariff filing or intrastate tariff revisions to increase such rates.

(2) If a Rate-of-Return Carrier made an intrastate switched access rate reduction in 2012 pursuant to paragraph (b)(2) of this section, and that Rate-of-Return Carrier has an intrastate rate for a rate element that is below the comparable interstate rate for that element, the Rate-of-Return Carrier shall:

(i) Increase any intrastate rate element that is below the comparable interstate rate to the interstate rate by July 1, 2013; and

(ii) Include any increases made pursuant to paragraph (c)(2)(i) of this section in the calculation of its eligible recovery for 2013.

(d) *Step 3*. Beginning July 1, 2014, notwithstanding any other provision of the Commission's rules:

(1) Notwithstanding the rate structure rules set forth in § 69.106 of this chapter or anything else in the Commission's rules, a Rate-of-Return Carrier shall establish separate originating and terminating interstate and intrastate rate elements for all components within interstate End Office Access Service. For fixed charges, the Rate-of-Return Carrier shall divide the amount based on relative originating and terminating end office switching minutes. If sufficient originating and terminating end office switching minute data is not available, the carrier shall divide such charges equally between originating and terminating elements.

(2) Nothing in this Step shall affect Tandem-Switched Transport Access Service or Dedicated Transport Access Service.

(3) Each Rate-of-Return Carrier shall establish rates for interstate and intrastate terminating End Office Access Service using the following methodology:

(i) Each Rate-of-Return Carrier shall calculate the 2011 Baseline Composite Terminating End Office Access Rate. The 2011 Baseline Composite Terminating End Office Access Rate means the Composite Terminating End Office Access Rate calculated using Fiscal Year 2011 interstate demand and the interstate End Office Access Service rates at the levels in effect on December 29, 2011.

(ii) Each Rate-of-Return Carrier shall calculate its 2014 Target Composite Terminating End Office Access Rate. The 2014 Target Composite Terminating End Office Access Rate means $0.005 per minute plus two-thirds of any difference between the 2011 Baseline Composite Terminating End Office Access Rate and $0.005 per minute.

(iii) Beginning July 1, 2014, no Rate-of-Return Carrier's interstate Composite Terminating End Office Access Rate shall exceed its 2014 Target Composite Terminating End Office Access Rate. A rate-of-return carrier shall determine compliance by calculating

interstate Composite Terminating End Office Access Rates using the relevant projected interstate demand for the tariff period multiplied by the respective interstate rates as of July 1, 2014, and then dividing by the projected interstate terminating end office local switching demand for the tariff period. A rate-of-return carrier's intrastate terminating end office access rates may not exceed the comparable interstate terminating end office access rates. In the alternative, any Rate-of-Return Carrier may elect to implement a single per minute rate element for both interstate and intrastate terminating End Office Access Service no greater than the 2014 Target Composite Terminating End Office Access Rate if its intrastate terminating end office access rates would be at rate parity with its interstate terminating end office access rates.

(4) Nothing in this section obligates or allows a Rate-of-Return Carrier that has intrastate rates lower than its functionally equivalent interstate rates to make any intrastate tariff filing or intrastate tariff revisions raising such rates.

(e) *Step 4.* Beginning July 1, 2015, notwithstanding any other provision of the Commission's rules:

(1) Each Rate-of-Return Carrier shall establish rates for interstate and intrastate terminating End Office Access Service using the following methodology:

(i) Each Rate-of-Return Carrier shall calculate its 2015 Target Composite Terminating End Office Access Rate. The 2015 Target Composite Terminating End Office Access Rate means $0.005 per minute plus one-third of any difference between the 2011 Baseline Composite Terminating End Office Access Rate and $0.005 per minute.

(ii) Beginning July 1, 2015, no Rate-of-Return Carrier's interstate Composite Terminating End Office Access Rate shall exceed its 2015 Target Composite Terminating End Office Access Rate. A rate-of-return carrier shall determine compliance by calculating interstate Composite Terminating End Office Access Rates using the relevant projected interstate demand for the tariff period multiplied by the respective interstate rates as of July 1, 2015, and then dividing by the projected interstate terminating end office local switching demand for the tariff period. A rate-of-return carrier's intrastate terminating end office access rates may not exceed the comparable interstate terminating end office access rates. In the alternative, any Rate-of-Return Carrier may elect to implement a single per minute rate element for both interstate and intrastate terminating End Office Access Service no greater than the 2015 Target Composite Terminating End Office Access Rate if its intrastate terminating end office access rates would be at rate parity with its interstate terminating end office access rates. Nothing in this section obligates or allows a Rate-of–Return Carrier that has intrastate rates lower than its functionally equivalent interstate rates to make any intrastate tariff filing or intrastate tariff revisions raising such rates.

(2) [Reserved]

(f) *Step 5.* Beginning July 1, 2016, notwithstanding any other provision of the Commission's rules, each Rate-of-Return Carrier shall establish interstate terminating End Office Access Service rates such that its interstate Composite Terminating End Office Access Service rate does not exceed $0.005 per minute. A rate-of-return carrier shall determine compliance by calculating interstate Composite Terminating End Office Access Rates using the relevant projected interstate demand for the tariff period multiplied by the respective interstate rates as of July 1, 2016, and then dividing by the projected interstate terminating end office local switching demand for the tariff period. A rate-of-return carrier's intrastate terminating end office access rates may not exceed the comparable interstate terminating end office access rates. In the alternative, any Rate-of-Return Carrier may elect to implement a single per minute rate element for both interstate and intrastate terminating End Office Access Service no greater than the 2016 Target Composite Terminating End Office Access Rate if its intrastate terminating end office access rates would be at rate parity with its interstate terminating end office access rates. Nothing in this section obligates or allows a Rate-of-

Return Carrier that has intrastate rates lower than its functionally equivalent interstate rates to make any intrastate tariff filing or intrastate tariff revisions raising such rates.

(g) *Step 6*. Beginning July 1, 2017, notwithstanding any other provision of the Commission's rules:

(1) Each Rate-of-Return Carrier shall establish interstate and intrastate rates for terminating End Office Access Service using the following methodology:

(i) Each Rate-of-Return Carrier shall calculate its 2017 Target Composite Terminating End Office Access Rate. The 2017 Target Composite Terminating End Office Access Rate means $0.0007 per minute plus two-thirds of any difference between that carrier's 2016 Target Composite Terminating End Office Access Rate and $0.0007 per minute.

(ii) Beginning July 1, 2017, no Rate-of–Return Carrier's interstate Composite Terminating End Office Access Rate shall exceed its 2017 Target Composite Terminating End Office Access Rate. A rate-of-return carrier shall determine compliance by calculating interstate Composite Terminating End Office Access Rates using the relevant projected interstate demand for the tariff period multiplied by the respective interstate rates as of July 1, 2017, and then dividing by the projected interstate terminating end office local switching demand for the tariff period. A rate-of-return carrier's intrastate terminating end office access rates may not exceed the comparable interstate terminating end office access rates. In the alternative, any Rate-of-Return Carrier may elect to implement a single per minute rate element for both interstate and intrastate terminating End Office Access Service no greater than the 2017 Target Composite Terminating End Office Access Rate if its intrastate terminating end office access rates would be at rate parity with its interstate terminating end office access rates. Nothing in this section obligates or allows a Rate-of–Return Carrier that has intrastate rates lower than its functionally equivalent interstate rates to make any intrastate tariff filing or intrastate tariff revisions raising such rates.

(2) [Reserved]

(h) *Step 7*. Beginning July 1, 2018, notwithstanding any other provision of the Commission's rules:

(1) Each Rate-of-Return Carrier shall establish interstate and intrastate rates for terminating End Office Access Service using the following methodology:

(i) Each Rate-of-Return Carrier shall calculate its 2018 Target Composite Terminating End Office Access Rate. The 2018 Target Composite Terminating End Office Access Rate means $0.0007 per minute plus one-third of any difference between that carrier's 2016 Target Composite Terminating End Office Access Rate and $0.0007 per minute.

(ii) Beginning July 1, 2018, no Rate-of-Return Carrier's interstate Composite Terminating End Office Access Rate shall exceed its 2018 Target Composite Terminating End Office Access Rate. A rate-of-return carrier shall determine compliance by calculating interstate Composite Terminating End Office Access Rates using the relevant projected interstate demand for the tariff period multiplied by the respective interstate rates as of July 1, 2018 and then dividing by the projected interstate terminating end office local switching demand for the tariff period. A rate-of-return carrier's intrastate terminating end office access rates may not exceed the comparable interstate terminating end office access rates. In the alternative, any Rate-of-Return Carrier may elect to implement a single per minute rate element for both interstate and intrastate terminating End Office Access Service no greater than the 2018 interstate Target Composite Terminating End Office Access Rate if its intrastate terminating end office access rates would be at rate parity with its interstate terminating end office access rates. Nothing in this section obligates or allows a Rate-of–Return Carrier that has intrastate rates lower than its functionally equivalent interstate rates to make any intrastate tariff filing or intrastate tariff revisions raising such rates.

(2) [Reserved]

(i) *Step 8*. Beginning July 1, 2019, notwithstanding any other provision of the Commission's rules, each Rate-of-

Return Carrier shall establish interstate and intrastate rates for terminating End Office Access Service that do not exceed $0.0007 per minute.

(j) *Step 9*. Beginning July 1, 2020, notwithstanding any other provision of the Commission's rules, each Rate-of-Return Carrier shall, in accordance with a bill-and-keep methodology, revise and refile its federal access tariffs and any state tariffs to remove any intercarrier charges for terminating End Office Access Service.

(k) As set forth in FCC 11–161, states will facilitate implementation of changes to intrastate access rates to ensure compliance with the Order. Nothing in this section shall alter the authority of a state to monitor and oversee filing of intrastate tariffs.

[76 FR 73856, Nov. 29, 2011, as amended at 77 FR 48452, Aug. 14, 2012; 78 FR 26267, May 6, 2013; 79 FR 28845, May 20, 2014]

§ 51.911 Access reciprocal compensation rates for competitive LECs.

(a) *Caps on Access Reciprocal Compensation and switched access rates*. Notwithstanding any other provision of the Commission's rules:

(1) In the case of Competitive LECs operating in an area served by a Price Cap Carrier, no such Competitive LEC may increase the rate for any originating or terminating intrastate switched access service above the rate for such service in effect on December 29, 2011.

(2) In the case of Competitive LEC operating in an area served by an incumbent local exchange carrier that is a Rate-of-Return Carrier or Competitive LECs that are subject to the rural exemption in § 61.26(e) of this chapter, no such Competitive LEC may increase the rate for any originating or terminating intrastate switched access service above the rate for such service in effect on December 29, 2011, with the exception of intrastate originating access service. For such Competitive LECs, intrastate originating access service subject to this subpart shall remain subject to the same state rate regulation in effect December 31, 2011, as may be modified by the state thereafter.

(b) Except as provided in paragraph (b)(7) of this section, beginning July 3, 2012, notwithstanding any other provision of the Commission's rules, each Competitive LEC that has tariffs on file with state regulatory authorities shall file intrastate access tariff provisions, in accordance with § 51.505(b)(2), that set forth the rates applicable to Transitional Intrastate Access Service in each state in which it provides Transitional Intrastate Access Service. Each Competitive Local Exchange Carrier shall establish the rates for Transitional Intrastate Access Service using the following methodology.

(1) Calculate total revenue from Transitional Intrastate Access Service at the carrier's interstate access rates in effect on December 29, 2011, using Fiscal Year 2011 intrastate switched access demand for each rate element.

(2) Calculate total revenue from Transitional Intrastate Access Service at the carrier's intrastate access rates in effect on December 29, 2011, using Fiscal Year 2011 intrastate switched access demand for each rate element.

(3) Calculate the Step 1 Access Revenue Reduction. The Step 1 Access Revenue Reduction is equal to one-half of the difference between the amount calculated in (b)(1) of this section and the amount calculated in (b)(2) of this section.

(4) A Competitive Local Exchange Carrier may elect to establish rates for Transitional Intrastate Access Service using its intrastate access rate structure. Carriers using this option shall establish rates for Transitional Intrastate Access Service such that Transitional Intrastate Access Service revenue at the proposed rates is no greater than Transitional Intrastate Access Service revenue at the intrastate rates in effect as of December 29, 2011 less the Step 1 Access Revenue Reduction, using Fiscal year 2011 intrastate switched access demand.

(5) In the alternative, a Competitive Local Exchange Carrier may elect to apply its interstate access rate structure and interstate rates to Transitional Intrastate Access Service. In addition to applicable interstate access rates, the carrier may assess a transitional per-minute charge on Transitional Intrastate Access Service end office switching minutes (previously

billed as intrastate access). The transitional charge shall be no greater than the Step 1 Access Revenue Reduction divided by Fiscal year 2011 intrastate switched access demand

(6) Except as provided in paragraph (b)(7) of this section, nothing in this section obligates or allows a Competitive LEC that has intrastate rates lower than its functionally equivalent interstate rates to make any intrastate tariff filing or intrastate tariff revisions raising such rates.

(7) If a Competitive LEC must make an intrastate switched access rate reduction pursuant to paragraph (b) of this section, and that Competitive LEC has an intrastate rate for a rate element that is below the comparable interstate rate for that element, the Competitive LEC may increase the rate for any intrastate rate element that is below the comparable interstate rate for that element to the interstate rate no later than July 1, 2013;

(c) Beginning July 1, 2013, notwithstanding any other provision of the Commission's rules, all Competitive Local Exchange Carrier Access Reciprocal Compensation rates for switched exchange access services subject to this subpart shall be no higher than the Access Reciprocal Compensation rates charged by the competing incumbent local exchange carrier, in accordance with the same procedures specified in § 61.26 of this chapter.

[76 FR 73856, Nov. 29, 2011, as amended at 77 FR 48452, Aug. 14, 2012]

§ 51.913 Transition for VoIP-PSTN traffic.

(a)(1) Terminating Access Reciprocal Compensation subject to this subpart exchanged between a local exchange carrier and another telecommunications carrier in Time Division Multiplexing (TDM) format that originates and/or terminates in IP format shall be subject to a rate equal to the relevant interstate terminating access charges specified by this subpart. Interstate originating Access Reciprocal Compensation subject to this subpart exchanged between a local exchange carrier and another telecommunications carrier in Time Division Multiplexing (TDM) format that originates and/or terminates in IP format shall be subject to a rate equal to the relevant interstate originating access charges specified by this subpart.

(2) Until June 30, 2014, intrastate originating Access Reciprocal Compensation subject to this subpart exchanged between a local exchange carrier and another telecommunications carrier in Time Division Multiplexing (TDM) format that originates and/or terminates in IP format shall be subject to a rate equal to the relevant intrastate originating access charges specified by this subpart. Effective July 1, 2014, originating Access Reciprocal Compensation subject to this subpart exchanged between a local exchange carrier and another telecommunications carrier in Time Division Multiplexing (TDM) format that originates and/or terminates in IP format shall be subject to a rate equal to the relevant interstate originating access charges specified by this subpart.

(3) Telecommunications traffic originates and/or terminates in IP format if it originates from and/or terminates to an end-user customer of a service that requires Internet protocol-compatible customer premises equipment.

(b) Notwithstanding any other provision of the Commission's rules, a local exchange carrier shall be entitled to assess and collect the full Access Reciprocal Compensation charges prescribed by this subpart that are set forth in a local exchange carrier's interstate or intrastate tariff for the access services defined in § 51.903 regardless of whether the local exchange carrier itself delivers such traffic to the called party's premises or delivers the call to the called party's premises via contractual or other arrangements with an affiliated or unaffiliated provider of interconnected VoIP service, as defined in 47 U.S.C. 153(25), or a non-interconnected VoIP service, as defined in 47 U.S.C. 153(36), that does not itself seek to collect Access Reciprocal Compensation charges prescribed by this subpart for that traffic. This rule does not permit a local exchange carrier to charge for functions not performed by the local exchange carrier itself or the affiliated or unaffiliated provider of interconnected VoIP service or non-

interconnected VoIP service. For purposes of this provision, functions provided by a LEC as part of transmitting telecommunications between designated points using, in whole or in part, technology other than TDM transmission in a manner that is comparable to a service offered by a local exchange carrier constitutes the functional equivalent of the incumbent local exchange carrier access service.

[76 FR 73856, Nov. 29, 2011, as amended at 77 FR 31536, May 29, 2012]

(a) Access Reciprocal Compensation subject to this subpart exchanged between a local exchange carrier and another telecommunications carrier in Time Division Multiplexing (TDM) format that originates and/or terminates in IP format shall be subject to a rate equal to the relevant interstate access charges specified by this subpart. Telecommunications traffic originates and/or terminates in IP format if it originates from and/or terminates to an end-user customer of a service that requires Internet protocol-compatible customer premises equipment.

(b) Notwithstanding any other provision of the Commission's rules, a local exchange carrier shall be entitled to assess and collect the full Access Reciprocal Compensation charges prescribed by this subpart that are set forth in a local exchange carrier's interstate or intrastate tariff for the access services defined in § 51.903 regardless of whether the local exchange carrier itself delivers such traffic to the called party's premises or delivers the call to the called party's premises via contractual or other arrangements with an affiliated or unaffiliated provider of interconnected VoIP service, as defined in 47 U.S.C. 153(25), or a non-interconnected VoIP service, as defined in 47 U.S.C. 153(36), that does not itself seek to collect Access Reciprocal Compensation charges prescribed by this subpart for that traffic. This rule does not permit a local exchange carrier to charge for functions not performed by the local exchange carrier itself or the affiliated or unaffiliated provider of interconnected VoIP service or non-interconnected VoIP service. For purposes of this provision, functions provided by a LEC as part of transmitting telecommunications between designated points using, in whole or in part, technology other than TDM transmission in a manner that is comparable to a service offered by a local exchange carrier constitutes the functional equivalent of the incumbent local exchange carrier access service.

§ 51.915 Recovery mechanism for price cap carriers.

(a) *Scope*. This section sets forth the extent to which Price Cap Carriers may recover certain revenues, through the recovery mechanism outlined below, to implement reforms adopted in FCC 11–161 and as required by § 20.11(b) of this chapter, and §§ 51.705 and 51.907.

(b) *Definitions*. As used in this section and § 51.917, the following terms mean:

(1) *CALLS Study Area*. A *CALLS Study Area* means a Price Cap Carrier study area that participated in the CALLS plan at its inception. *See Access Charge Reform, Price Cap Performance Review for Local Exchange Carriers, Low-Volume Long-Distance Users, Federal-State Joint Board on Universal Service*, Sixth Report and Order in CC Docket Nos. 96–262 and 94–1, Report and Order in CC Docket No. 99–249, Eleventh Report and Order in CC Docket No. 96–45, 15 FCC Rcd 12962 (2000).

(2) *CALLS Study Area Base Factor*. The *CALLS Study Area Base Factor* is equal to ninety (90) percent.

(3) *CMRS Net Reciprocal Compensation Revenues*. *CMRS Net Reciprocal Compensation Revenues* means the reduction in net reciprocal compensation revenues required by § 20.11 of this chapter associated with CMRS traffic as described in § 51.701(b)(2), which is equal to its Fiscal Year 2011 net reciprocal compensation revenues from CMRS carriers.

(4) *Expected Revenues for Access Recovery Charges*. *Expected Revenues for Access Recovery Charges* are calculated using the tariffed Access Recovery Charge rate for each class of service and the forecast demand for each class of service.

(5) *Initial Composite Terminating End Office Access Rate*. *Initial Composite Terminating End Office Access Rate* means Fiscal Year 2011 terminating interstate End Office Access Service revenue divided by Fiscal Year 2011 terminating

interstate end office switching minutes.

(6) *Lifeline Customer*. A *Lifeline Customer* is a residential lifeline subscriber as defined by §54.400(a) of this chapter that does not pay a Residential and/or Single-Line Business End User Common Line Charge.

(7) *Net Reciprocal Compensation*. *Net Reciprocal Compensation* means the difference between a carrier's reciprocal compensation revenues from non-access traffic less its reciprocal compensation payments for non-access traffic during a stated period of time. For purposes of the calculations made under §§51.915 and 51.917, the term does not include reciprocal compensation revenues for non-access traffic exchanged between Local Exchange Carriers and CMRS providers; recovery for such traffic is addressed separately in these sections.

(8) *Non-CALLS Study Area*. *Non-CALLS Study Area* means a Price Cap Carrier study area that did not participate in the CALLS plan at its inception.

(9) *Non-CALLS Study Area Base Factor*. The *Non-CALLS Study Area Base Factor* is equal to one hundred (100) percent for five (5) years beginning July 1, 2012. Beginning July 1, 2017, the *Non-CALLS Price Cap Carrier Base Factor* will be equal to ninety (90) percent.

(10) *Price Cap Carrier Traffic Demand Factor*. The *Price Cap Carrier Traffic Demand Factor*, as used in calculating eligible recovery, is equal to ninety (90) percent for the one-year period beginning July 1, 2012. It is reduced by ten (10) percent of its previous value in each subsequent annual tariff filing.

(11) *Rate Ceiling Component Charges*. The *Rate Ceiling Component Charges* consists of the federal end user common line charge and the Access Recovery Charge; the flat rate for residential local service (sometimes know as the ''1FR'' or ''R1'' rate), mandatory extended area service charges, and state subscriber line charges; per-line state high cost and/or state access replacement universal service contributions, state E911 charges, and state TRS charges.

(12) *Residential Rate Ceiling*. The *Residential Rate Ceiling*, which consists of the total of the Rate Ceiling Component Charges, is set at $30 per month. The *Residential Rate Ceiling* will be the higher of the rate in effect on January 1, 2012, or the rate in effect on January 1 in any subsequent year.

(13) *True-up Revenues for Access Recovery Charge*. True-up revenues for Access Recovery Charge are equal to (projected demand minus actual realized demand for Access Recovery Charges) times the tariffed Access Recovery Charge. This calculation shall be made separately for each class of service and shall be adjusted to reflect any changes in tariffed rates for the Access Recovery Charge. Realized demand is the demand for which payment has been received by the time the true-up is made.

(14) Intrastate 2014 Composite Terminating End Office Access Rate. The Intrastate 2014 Composite Terminating End Office Access Rate as used in this section is determined by

(i) If a separate terminating rate is not already generally available, developing separate intrastate originating and terminating end office rates in accordance with §51.907(d)(1) using end office access rates at their June 30, 2014, rate caps;

(ii) Multiplying the existing terminating June 30, 2014, intrastate end office access rates, or the terminating rates developed in paragraph (b)(14)(i) of this section, by the relevant Fiscal Year 2011 intrastate demand; and

(iii) Dividing the sum of the revenues determined in paragraph (b)(14)(ii) of this section by 2011 Fiscal Year intrastate terminating local switching minutes.

(c) 2011 *Price Cap Carrier Base Period Revenue*. 2011 Price Cap Carrier Base Period Revenue is equal to the sum of the following three components:

(1) Terminating interstate end office switched access revenues and interstate Tandem-Switched Transport Access Service revenues for Fiscal Year 2011 received by March 31, 2012;

(2) Fiscal Year 2011 revenues from Transitional Intrastate Access Service received by March 31, 2012; and

(3) Fiscal Year 2011 reciprocal compensation revenues received by March 31, 2012, less fiscal year 2011 reciprocal compensation payments made by March 31, 2012.

(d) *Eligible recovery for Price Cap Carriers.*(1) Notwithstanding any other provision of the Commission's rules, a Price Cap Carrier may recover the amounts specified in this paragraph through the mechanisms described in paragraphs (e) and (f) of this section.

(i) Beginning July 1, 2012, a Price Cap Carrier's eligible recovery will be equal to the CALLS Study Area Base Factor and/or the Non-CALLS Study Area Base Factor, as applicable, multiplied by the sum of the following three components:

(A) The amount of the reduction in Transitional Intrastate Access Service revenues determined pursuant to § 51.907(b)(2) multiplied by the Price Cap Carrier Traffic Demand Factor;

(B) CMRS Net Reciprocal Compensation Revenues multiplied by the Price Cap Carrier Traffic Demand Factor; and

(C) A Price Cap Carrier's reductions in Fiscal Year 2011 net reciprocal compensation revenues resulting from rate reductions required by § 51.705, other than those associated with CMRS traffic as described in § 51.701(b)(2), which may be calculated in one of the following ways:

(1) Calculate the reduction in Fiscal Year 2011 net reciprocal compensation revenue as a result of rate reductions required by § 51.705 using Fiscal Year 2011 reciprocal compensation demand, and then multiply by the Price Cap Carrier Traffic Demand Factor;

(2) By using a composite reciprocal compensation rate as follows:

(*i*) Establish a composite reciprocal compensation rate for its Fiscal Year 2011 reciprocal compensation receipts and its Fiscal Year 2011 reciprocal compensation payments by dividing its Fiscal Year 2011 reciprocal compensation receipts and payments by its respective Fiscal Year 2011 demand excluding demand for traffic exchanged pursuant to a bill-and-keep arrangement;

(ii) Calculate the difference between each of the composite reciprocal compensation rates and the target reciprocal compensation rate set forth in § 51.705 for the year beginning July 1, 2012 multiply by the appropriate Fiscal Year 2011 demand, and then multiply by the Price Cap Carrier Traffic Demand Factor; or

(3) For the purpose of establishing its recovery for net reciprocal compensation, a Price Cap Carrier may elect to forgo this step and receive no recovery for reductions in net reciprocal compensation. If a carrier elects this option, it may not change its election at a later date.

(ii) Beginning July 1, 2013, a Price Cap Carrier's eligible recovery will be equal to the CALLS Study Area Base Factor and/or the Non-CALLS Study Area Base Factor, as applicable, multiplied by the sum of the following three components:

(A) The cumulative amount of the reduction in Transitional Intrastate Access Service revenues determined pursuant to § 51.907(b)(2) and (c) multiplied by the Price Cap Carrier Traffic Demand Factor; and

(B) CMRS Net Reciprocal Compensation Revenues multiplied by the Price Cap Carrier Traffic Demand Factor; and

(C) A Price Cap Carrier's cumulative reductions in Fiscal Year 2011 net reciprocal compensation revenues other than those associated with CMRS traffic as described in § 51.701(b)(2) resulting from rate reductions required by § 51.705 may be calculated in one of the following ways:

(1) Calculate the cumulative reduction in Fiscal Year 2011 net reciprocal compensation revenue as a result of rate reductions required by § 51.705 using Fiscal Year 2011 reciprocal compensation demand and then multiply by the Price Cap Carrier Traffic Demand Factor;

(2) By using a composite reciprocal compensation rate as follows:

(*i*) Establish a composite reciprocal compensation rate for its Fiscal Year 2011 reciprocal compensation receipts and its Fiscal Year 2011 reciprocal compensation payments by dividing its Fiscal Year 2011 reciprocal compensation receipts and payments by its respective Fiscal Year 2011 demand excluding demand for traffic exchanged pursuant to a bill-and-keep arrangement;

(ii) Calculate the difference between each of the composite reciprocal compensation rates and the target reciprocal compensation rate set forth in § 51.705 for the year beginning July 1, 2013, using the appropriate Fiscal Year

2011 demand, and then multiply by the Price Cap Carrier Traffic Demand Factor; or

(3) For the purpose of establishing its recovery for net reciprocal compensation, a Price Cap Carrier may elect to forgo this step and receive no recovery for reductions in net reciprocal compensation. If a carrier elects this option, it may not change its election at a later date.

(iii) Beginning July 1, 2014, a Price Cap Carrier's eligible recovery will be equal to the CALLS Study Area Base Factor and/or the Non-CALLS Study Area Base Factor, as applicable, multiplied by the sum of the amounts in paragraphs (d)(1)(iii)(A) through (d)(1)(iii)(E), of this section, and then adding the amount in paragraph (d)(1)(iii)(F) of this section to that amount:

(A) The amount of the reduction in Transitional Intrastate Access Service revenues determined pursuant to §51.907(b)(2) and (c) multiplied by the Price Cap Carrier Traffic Demand Factor; and

(B) The reduction in interstate switched access revenues equal to the difference between the 2011 Baseline Composite Terminating End Office Access Rate and the 2014 Target Composite Terminating End Office Access Rate determined pursuant to §51.907(d) using Fiscal Year 2011 terminating interstate end office switching minutes, and then multiply by the Price Cap Carrier Traffic Demand Factor;

(C) If the carrier reduced its 2014 Intrastate Terminating End Office Access Rate(s) pursuant to §51.907(d)(2), the reduction in revenues equal to the difference between either the Intrastate 2014 Composite Terminating End Office Access Rate and the Composite Terminating End Office Access Rate based on the maximum terminating end office rates that could have been charged on July 1, 2014, or the 2014 Target Composite Terminating End Office Access Rate, as applicable, using Fiscal Year 2011 terminating intrastate end office switching minutes, and then multiply by the Price Cap Carrier Traffic Demand Factor;

(D) CMRS Net Reciprocal Compensation Revenues multiplied by the Price Cap Carrier Traffic Demand Factor; and

(E) A Price Cap Carrier's cumulative reductions in Fiscal Year 2011 net reciprocal compensation revenues other than those associated with CMRS traffic as described in §51.701(b)(2) resulting from rate reductions required by §51.705 may be calculated in one of the following ways:

(1) Calculate the cumulative reduction in Fiscal Year 2011 net reciprocal compensation revenue as a result of rate reductions required by §51.705 using Fiscal Year 2011 reciprocal compensation demand, and then multiply by the Price Cap Carrier Traffic Demand Factor;

(2) By using a composite reciprocal compensation rate as follows:

(*i*) Establish a composite reciprocal compensation rate for its Fiscal Year 2011 reciprocal compensation receipts and its Fiscal Year 2011 reciprocal compensation payments by dividing its Fiscal Year 2011 reciprocal compensation receipts and payments by its respective Fiscal Year 2011 demand excluding demand for traffic exchanged pursuant to a bill-and-keep arrangement;

(ii) Calculate the difference between each of the composite reciprocal compensation rates and the target reciprocal compensation rate set forth in §51.705 for the year beginning July 1, 2014, using the appropriate Fiscal Year 2011 demand, and then multiply by the Price Cap Carrier Traffic Demand Factor; or

(3) For the purpose of establishing its recovery for net reciprocal compensation, a Price Cap Carrier may elect to forgo this step and receive no recovery for reductions in net reciprocal compensation. If a carrier elects this option, it may not change its election at a later date.

(F) An amount equal to True-up Revenues for Access Recovery Charges for the year beginning July 1, 2012.

(iv) Beginning July 1, 2015, a Price Cap Carrier's eligible recovery will be equal to the CALLS Study Area Base Factor and/or the Non-CALLS Study Area Base Factor, as applicable, multiplied by the sum of the amounts in paragraphs (d)(1)(iv)(A) through (d)(1)(iv)(E) of this section and then adding the amount in paragraph

(d)(1)(iv)(F) of this section to that amount:

(A) The amount of the reduction in Transitional Intrastate Access Service revenues determined pursuant to § 51.907(b)(2) and (c) multiplied by the Price Cap Carrier Traffic Demand Factor;

(B) The reduction in interstate switched access revenues equal to the difference between the 2011 Baseline Composite Terminating End Office Access Rate and the 2015 Target Composite Terminating End Office Access Rate determined pursuant to § 51.907(e) using Fiscal Year 2011 terminating interstate end office switching minutes, and then multiply by the Price Cap Carrier Traffic Demand Factor;

(C) If the carrier reduced its Intrastate Terminating End Office Access Rate(s) pursuant to § 51.907(e)(1), the reduction in intrastate switched access revenues equal to the difference between either the intrastate 2014 Composite Terminating End Office Access Rate and the Composite Terminating End Office Access Rate based on the maximum terminating end office rates that could have been charged on July 1, 2015, or the 2015 Target Composite Terminating End Office Access Rate, as applicable, using Fiscal Year 2011 terminating intrastate end office switching minutes, and then multiply by the Price Cap Carrier Traffic Demand Factor; and

(D) CMRS Net Reciprocal Compensation Revenues multiplied by the Price Cap Carrier Traffic Demand Factor;

(E) A Price Cap Carrier's cumulative reductions in Fiscal Year 2011 net reciprocal compensation revenues other than those associated with CMRS traffic as described in § 51.701(b)(2) resulting from rate reductions required by § 51.705 may be calculated in one of the following ways:

(1) Calculate the cumulative reduction in Fiscal Year 2011 net reciprocal compensation revenue as a result of rate reductions required by § 51.705 using Fiscal Year 2011 reciprocal compensation demand, and then multiply by the Price Cap Carrier Traffic Demand Factor;

(2) By using a composite reciprocal compensation rate as follows:

(i) Establish a composite reciprocal compensation rate for its Fiscal Year 2011 reciprocal compensation receipts and its Fiscal Year 2011 reciprocal compensation payments by dividing its Fiscal Year 2011 reciprocal compensation receipts and payments by its respective Fiscal Year 2011 demand excluding demand for traffic exchanged pursuant to a bill-and-keep arrangement;

(ii) Calculate the difference between each of the composite reciprocal compensation rates and the target reciprocal compensation rate set forth in § 51.705 for the year beginning July 1, 2015, using the appropriate Fiscal Year 2011 demand, and then multiply by the Price Cap Carrier Traffic Demand Factor; or

(3) For the purpose of establishing its recovery for net reciprocal compensation, a Price Cap Carrier may elect to forgo this step and receive no recovery for reductions in net reciprocal compensation. If a carrier elects this option, it may not change its election at a later date.

(F) An amount equal to True-up Revenues for Access Recovery Charges for the year beginning July 1, 2013.

(v) Beginning July 1, 2016, a Price Cap Carrier's eligible recovery will be equal to the CALLS Study Area Base Factor and/or the Non-CALLS Study Area Base Factor, as applicable, multiplied by the sum of the amounts in paragraphs (d)(1)(v)(A) through (d)(1)(v)(E), of this section and then adding the amount in paragraph (d)(1)(v)(F) of this section to that amount:

(A) The amount of the reduction in Transitional Intrastate Access Service revenues determined pursuant to § 51.907(b)(2) and (c) multiplied by the Price Cap Carrier Traffic Demand Factor;

(B) The reduction in interstate switched access revenues equal to the difference between the 2011 Baseline Composite Terminating End Office Access Rate and $0.0007 determined pursuant to § 51.907(f) using Fiscal Year 2011 terminating interstate end office switching minutes, and then multiply by the Price Cap Carrier Traffic Demand Factor;

(C) If the carrier reduced its Intrastate Terminating End Office Access

Rate(s) pursuant to §51.907(f), the reduction in revenues equal to the difference between either the Intrastate 2014 Composite Terminating End Office Access Rate and $0.0007 based on the maximum terminating end office rates that could have been charged on July 1, 2016, or the 2016 Target Composite Terminating End Office Access Rate, as applicable, using Fiscal Year 2011 terminating intrastate end office minutes, and then multiply by the Price Cap Carrier Traffic Demand Factor;

(D) CMRS Net Reciprocal Compensation Revenues multiplied by the Price Cap Carrier Traffic Demand Factor;

(E) A Price Cap Carrier's cumulative reductions in Fiscal Year 2011 net reciprocal compensation revenues other than those associated with CMRS traffic as described in §51.701(b)(2) resulting from rate reductions required by §51.705 may be calculated in one of the following ways:

(1) Calculate the cumulative reduction in Fiscal Year 2011 net reciprocal compensation revenue as a result of rate reductions required by §51.705 using Fiscal Year 2011 reciprocal compensation demand, and then multiply by the Price Cap Carrier Traffic Demand Factor;

(2) By using a composite reciprocal compensation rate as follows:

(*i*) Establish a composite reciprocal compensation rate for its Fiscal Year 2011 reciprocal compensation receipts and its Fiscal Year 2011 reciprocal compensation payments by dividing its Fiscal Year 2011 reciprocal compensation receipts and payments by its respective Fiscal Year 2011 demand excluding demand for traffic exchanged pursuant to a bill-and-keep arrangement;

(ii) Calculate the difference between each of the composite reciprocal compensation rates and the target reciprocal compensation rate set forth in §51.705 for the year beginning July 1, 2016, using the appropriate Fiscal Year 2011 demand, and then multiply by the Price Cap Carrier Traffic Demand Factor; or

(3) For the purpose of establishing its recovery for net reciprocal compensation, a Price Cap Carrier may elect to forgo this step and receive no recovery for reductions in net reciprocal compensation. If a carrier elects this option, it may not change its election at a later date.

(F) An amount equal to True-up Revenues for Access Recovery Charges for the year beginning July 1, 2014.

(vi) Beginning July 1, 2017, a Price Cap Carrier's eligible recovery will be equal to ninety (90) percent of the sum of the amounts in paragraphs (d)(1)(vi) through (d)(1)(vi)(F) of this section, and then adding the amount in paragraph (d)(1)(vi)(G) f this section to that amount:

(A) The amount of the reduction in Transitional Intrastate Access Service revenues determined pursuant to §51.907(b)(2) and (c) multiplied by the Price Cap Carrier Traffic Demand Factor; and

(B) The reduction in interstate switched access revenues equal to the 2011 Baseline Composite Terminating End Office Access Rate using Fiscal Year 2011 terminating interstate end office switching minutes, and then multiply by the Price Cap Carrier Traffic Demand Factor;

(C) The reduction in revenues equal to the intrastate 2014 Composite terminating End Office Access Rate using Fiscal Year 2011 terminating intrastate end office switching minutes, and then multiply by the Price Cap Carrier Traffic Demand Factor;

(D) The reduction in revenues resulting from reducing the terminating Tandem-Switched Transport Access Service rate to $0.0007 pursuant to §51.907(g)(2) using Fiscal Year 2011 terminating tandem-switched minutes, and then multiply by the Price Cap Carrier Traffic Demand Factor;

(E) CMRS Net Reciprocal Compensation Revenues multiplied by the Price Cap Carrier Traffic Demand Factor; and

(F) A Price Cap Carrier's cumulative reductions in Fiscal Year 2011 net reciprocal compensation revenues other than those associated with CMRS traffic as described in §51.701(b)(2) resulting from rate reductions required by §51.705 may be calculated in one of the following ways:

(1) Calculate the cumulative reduction in Fiscal Year 2011 net reciprocal compensation revenue as a result of rate reductions required by §51.705

using Fiscal Year 2011 reciprocal compensation demand, and then multiply by the Price Cap Carrier Traffic Demand Factor;

(2) By using a composite reciprocal compensation rate as follows:

(*i*) Establish a composite reciprocal compensation rate for its Fiscal Year 2011 reciprocal compensation receipts and its Fiscal Year 2011 reciprocal compensation payments by dividing its Fiscal Year 2011 reciprocal compensation receipts and payments by its respective Fiscal Year 2011 demand excluding demand for traffic exchanged pursuant to a bill-and-keep arrangement;

(ii) Calculate the difference between each of the composite reciprocal compensation rates and the target reciprocal compensation rate set forth in § 51.705 for the year beginning July 1, 2017, using the appropriate Fiscal Year 2011 demand, and then multiply by the Price Cap Carrier Traffic Demand Factor; or

(3) For the purpose of establishing its recovery for net reciprocal compensation, a Price Cap Carrier may elect to forgo this step and receive no recovery for reductions in net reciprocal compensation. If a carrier elects this option, it may not change its election at a later date.

(G) An amount equal to True-up Revenues for Access Recovery Charges for the year beginning July 1, 2015.

(vii) Beginning July 1, 2018, a Price Cap Carrier's eligible recovery will be equal to ninety (90) percent of the sum of the amounts in paragraphs (d)(1)(vii)(A) though (d)(1)(vii)(G) of this section, and then adding the amount in paragraph (d)(1)(vii)(H) of this section to that amount:

(A) The amount of the reduction in Transitional Intrastate Access Service revenues determined pursuant to § 51.907(b)(2) and (c) multiplied by the Price Cap Carrier Traffic Demand Factor; and:

(B) The reduction in interstate switched access revenues equal to the 2011 Baseline Composite Terminating End Office Access Rate using Fiscal Year 2011 terminating interstate end office switching minutes, and then multiply by the Price Cap Carrier Traffic Demand Factor;

(C) The reduction in revenues equal to the intrastate 2014 Composite terminating End Office Access Rate using Fiscal Year 2011 terminating intrastate end office switching minutes, and then multiply by the Price Cap Carrier Traffic Demand Factor;

(D) The reduction in revenues resulting from reducing the terminating Tandem-Switched Transport Access Service rate to $0.0007 pursuant to § 51.907(g)(2) using Fiscal Year 2011 terminating tandem-switched minutes, and then multiply by the Price Cap Carrier Traffic Demand Factor;

(E) The reduction in revenues resulting from moving from a terminating Tandem-Switched Transport Access Service rate tariffed at a maximum of $0.0007 to removal of intercarrier charges pursuant to § 51.907(h), if applicable, using Fiscal Year 2011 terminating tandem-switched minutes, and then multiply by the Price Cap Carrier Traffic Demand Factor;

(F) CMRS Net Reciprocal Compensation Revenues multiplied by the Price Cap Carrier Traffic Demand Factor; and

(G) A Price Cap Carrier's cumulative reductions in Fiscal Year 2011 net reciprocal compensation revenues other than those associated with CMRS traffic as described in § 51.701(b)(2) resulting from rate reductions required by § 51.705 may be calculated in one of the following ways:

(1) Calculate the cumulative reduction in Fiscal Year 2011 net reciprocal compensation revenue as a result of rate reductions required by § 51.705 using Fiscal Year 2011 reciprocal compensation demand, and then multiply by the Price Cap Carrier Traffic Demand Factor;

(2) By using a composite reciprocal compensation rate as follows:

(*i*) Establish a composite reciprocal compensation rate for its Fiscal Year 2011 reciprocal compensation receipts and its Fiscal Year 2011 reciprocal compensation payments by dividing its Fiscal Year 2011 reciprocal compensation receipts and payments by its respective Fiscal Year 2011 demand excluding demand for traffic exchanged pursuant to a bill-and-keep arrangement;

(ii) Calculate the difference between each of the composite reciprocal compensation rates and the target reciprocal compensation rate set forth in § 51.705 for the year beginning July 1, 2018, using the appropriate Fiscal Year 2011 demand, and then multiply by the Price Cap Carrier Traffic Demand Factor; or

(3) For the purpose of establishing its recovery for net reciprocal compensation, a Price Cap Carrier may elect to forgo this step and receive no recovery for reductions in net reciprocal compensation. If a carrier elects this option, it may not change its election at a later date.

(H) An amount equal to True-up Revenues for Access Recovery Charges for the year beginning July 1, 2016.

(viii) Beginning July 1, 2019, and in subsequent years, a Price Cap Carrier's eligible recovery will be equal to the amount calculated in paragraph (d)(1)(vii)(A) through (d)(1)(vii)(H) of this section before the application of the Price Cap Carrier Traffic Demand Factor applicable in 2018 multiplied by the appropriate Price Cap Carrier Traffic Demand Factor for the year in question, and then adding an amount equal to True-up Revenues for Access Recovery Charges for the year beginning July 1 two years earlier.

(2) If a Price Cap Carrier recovers any costs or revenues that are already being recovered through Access Recovery Charges or the Connect America Fund from another source, that carrier's ability to recover reduced switched access revenue from Access Recovery Charges or the Connect America Fund shall be reduced to the extent it receives duplicative recovery. Any duplicative recovery shall be reflected as a reduction to a carrier's Eligible Recovery calculated pursuant to § 51.915(d).

(3) A Price Cap Carrier seeking revenue recovery must annually certify as part of its tariff filings to the Commission and to the relevant state commission that the carrier is not seeking duplicative recovery in the state jurisdiction for any Eligible Recovery subject to the recovery mechanism.

(4) If a Price Cap Carrier receives payment for Access Recovery Charges after the period used to measure the adjustment to reflect the differences between estimated and actual revenues, it shall treat such payments as actual revenues in the year the payment is received and shall reflect this as an additional adjustment for that year.

(e) *Access Recovery Charge.* (1) A charge that is expressed in dollars and cents per line per month may be assessed upon end users that may be assessed an end user common line charge pursuant to § 69.152 of this chapter, to the extent necessary to allow the Price Cap Carrier to recover some or all of its eligible recovery determined pursuant to paragraph (d) of this section, subject to the caps described in paragraph (e)(5) of this section. A Price Cap Carrier may elect to forgo charging some or all of the Access Recovery Charge.

(2) Total Access Recovery Charges calculated by multiplying the tariffed Access Recovery Charge by the projected demand for the year in question may not recover more than the amount of eligible recovery calculated pursuant to paragraph (d) of this section for the year beginning on July 1.

(3) For the purposes of this section, a Price Cap Carrier holding company includes all of its wholly-owned operating companies that are price cap incumbent local exchange carriers. A Price Cap Carrier Holding Company may recover the eligible recovery attributable to any price cap study areas operated by its wholly-owned operating companies through assessments of the Access Recovery Charge on end users in any price cap study areas operated by its wholly owned operating companies that are price cap incumbent local exchange carriers.

(4) *Distribution of Access Recovery Charges among lines of different types.* (i) A Price Cap Carrier holding company that does not receive ICC-replacement CAF support (whether because it elects not to or because it does not have sufficient eligible recovery after the Access Recovery Charge is assessed or imputed) may not recover a higher fraction of its total revenue recovery from Access Recovery Charges assessed on Residential and Single Line Business lines than:

(A) The number of Residential and Single-Line Business lines divided by

(B) The sum of the number of Residential and Single-Line Business lines and two (2) times the number of End User Common Line charges assessed on Multi-Line Business customers.

(ii) For purposes of this subpart, Residential and Single Line Business lines are lines (other than lines of Lifeline Customers) assessed the residential and single line business end user common line charge and lines assessed the non-primary residential end user common line charge.

(iii) For purposes of this subpart, Multi-Line Business Lines are lines assessed the multi-line business end user common line charge.

(5) Per-line caps and other limitations on Access Recovery Charges

(i) For each line other than lines of Lifeline Customers assessed a primary residential or single-line business end user common line charge or a non-primary residential end user common line charge pursuant to § 69.152 of this Chapter, a Price Cap Carrier may assess an Access Recovery Charge as follows:

(A) Beginning July 1, 2012, a maximum of $0.50 per month for each line;

(B) Beginning July 1, 2013, a maximum of $1.00 per month for each line;

(C) Beginning July 1, 2014, a maximum of $1.50 per month for each line;

(D) Beginning July 1, 2015, a maximum of $2.00 per month for each line; and

(E) Beginning July 1, 2016, a maximum of $2.50 per month for each line.

(ii) For each line assessed a multi-line business end user common line charge pursuant to § 69.152 of this chapter, a Price Cap Carrier may assess an Access Recovery Charge as follows:

(A) Beginning July 1, 2012, a maximum of $1.00 per month for each multi-line business end user common line charge assessed;

(B) Beginning July 1, 2013, a maximum of $2.00 per month for each multi-line business end user common line charge assessed;

(C) Beginning July 1, 2014, a maximum of $3.00 per month for each multi-line business end user common line charge assessed;

(D) Beginning July 1, 2015, a maximum of $4.00 per month for each multi-line business end user common line charge assessed; and

(E) Beginning July 1, 2016, a maximum of $5.00 per month for each multi-line business end user common line charge assessed.

(iii) The Access Recovery Charge allowed by paragraph (e)(5)(i) of this section may not be assessed to the extent that its assessment would bring the total of the Rate Ceiling Component Charges above the Residential Rate Ceiling on January 1 of that year. This limitation applies only to the first residential line obtained by a residential end user and does not apply to single-line business customers.

(iv) The Access Recovery Charge allowed by paragraph (e)(5)(ii) of this section may not be assessed to the extent that its assessment would bring the total of the multi-line business end user common line charge and the Access Recovery Charge above $12.20 per line.

(v) The Access Recovery Charge assessed on lines assessed the non-primary residential line end user common line charge in a study area may not exceed the Access Recovery Charge assessed on residential end-users' first residential line in that study area.

(vi) The Access Recovery Charge may not be assessed on lines of any Lifeline Customers.

(vii) If in any year, the Price Cap Carrier's Access Recovery Charge is not at its maximum, the succeeding year's Access Recovery Charge may not increase more than $.0.50 per line per month for charges assessed under paragraph (e)(5)(i) of this section or $1.00 per line per month for charges assessed under paragraph (e)(5)(ii) of this section.

(f) *Price Cap Carrier eligibility for CAF ICC Support.*(1) A Price Cap Carrier shall elect in its July 1, 2012 access tariff filing whether it will receive CAF ICC Support under this paragraph. A Price Cap Carrier eligible to receive CAF ICC Support subsequently may elect at any time not to receive such funding. Once it makes the election not to receive CAFF ICC Support, it may not elect to receive such funding at a later date.

(2) Beginning July 1, 2012, a Price Cap Carrier may recover any eligible recovery allowed by paragraph (d) that it could not have recovered through charges assessed pursuant to paragraph (e) of this section from CAF ICC Support pursuant to § 54.304. For this purpose, the Price Cap Carrier must impute the maximum charges it could have assessed under paragraph (e)of this section.

(3) Beginning July 1, 2017, a Price Cap Carrier may recover two-thirds (⅔) of the amount it otherwise would have been eligible to recover under paragraph (f)(2) from CAF ICC Support.

(4) Beginning July 1, 2018, a Price Cap Carrier may recover one-third (1/3) of the amount it otherwise would have been eligible to recover under paragraph (f)(2) of this section from CAF ICC Support.

(5) Beginning July 1, 2019, a Price Cap Carrier may no longer recover any amount related to revenue recovery under this paragraph from CAF ICC Support.

(6) A Price Cap Carrier that elects to receive CAF ICC support must certify with its annual access tariff filing that it has complied with paragraphs (d) and (e) of this section, and, after doing so, is eligible to receive the CAF ICC support requested pursuant to paragraph (f) of this section.

[76 FR 73856, Nov. 29, 2011, as amended at 77 FR 48453, Aug. 14, 2012; 78 FR 26268, May 6, 2013;79 FR 28846, May 20, 2014]

§ 51.917 Revenue recovery for Rate-of-Return Carriers.

(a) *Scope*. This section sets forth the extent to which Rate-of-Return Carriers may recover, through the recovery mechanism outlined in paragraphs (d) through (f) of this section, a portion of revenues lost due to rate reductions required by § 20.11(b) of this chapter, and §§ 51.705 and 51.909.

(b) *Definitions*.

(1) *2011 Interstate Switched Access Revenue Requirement. 2011 Interstate Switched Access Revenue Requirement means:*

(i) For a Rate-of-Return Carrier that participated in the NECA 2011 annual switched access tariff filing, its projected interstate switched access revenue requirement associated with the NECA 2011 annual interstate switched access tariff filing;

(ii) For a Rate-of-Return Carrier subject to § 61.38 of this chapter that filed its own annual access tariff in 2010 and did not participate in the NECA 2011 annual switched access tariff filing, its projected interstate switched access revenue requirement in its 2010 annual interstate switched access tariff filing; and

(iii) For a Rate-of-Return Carrier subject to § 61.39 of this chapter that filed its own annual switched access tariff in 2011, its historically-determined annual interstate switched access revenue requirement filed with its 2011 annual interstate switched access tariff filing.

(2) *Expected Revenues*. Expected Revenues from an access service are calculated using the default transition rate for that service specified by § 51.909 and forecast demand for that service. Expected Revenues from a non-access service are calculated using the default transition rate for that service specified by § 20.11 of this chapter or § 51.705 of this chapter and forecast net demand for that service.

(3) *Rate-of-Return Carrier Baseline Adjustment Factor*. The Rate-of-Return Carrier Baseline Adjustment Factor, as used in calculating eligible recovery for Rate-of-Return Carriers, is equal to ninety-five (95) percent for the period beginning July 1, 2012. It is reduced by five (5) percent of its previous value in each subsequent annual tariff filing.

(4) *Revenue Requirement*. Revenue Requirement is equal to a carrier's regulated operating costs plus an 11.25 percent return on a carrier's net rate base calculated in compliance with the provisions of parts 36, 65 and 69 of this chapter. For an average schedule carrier, its Revenue Requirement shall be equal to the average schedule settlements it received from the pool, adjusted to reflect an 11.25 percent rate of return, or what it would have received if it had been a participant in the pool. If the reference is to an operating segment, these references are to the Revenue Requirement associated with that segment.

(5) *True-up Adjustment*. The True-up Adjustment is equal to the True-up

Revenues for any particular service for the period in question.

(6) *True-up Revenues.* True-up Revenues from an access service are equal to (projected demand minus actual realized demand for that service) times the default transition rate for that service specified by § 51.909. True-up Revenues from a non-access service are equal to (projected demand minus actual realized net demand for that service) times the default transition rate for that service specified by § 20.11(b) of this chapter or § 51.705. Realized demand is the demand for which payment has been received, or has been made, as appropriate, by the time the true-up is made.

(7) *2011 Rate-of-Return Carrier Base Period Revenue. 2011 Rate-of-Return Carrier Base Period Revenue* is the sum of:

(i) 2011 Interstate Switched Access Revenue Requirement;

(ii) Fiscal Year 2011 revenues from Transitional Intrastate Access Service received by March 31, 2012; and

(iii) Fiscal Year 2011 reciprocal compensation revenues received by March 31, 2012, less Fiscal Year 2011 reciprocal compensation payments paid and/or payable by March 31, 2012

(c) 2011 Rate-of-Return Carrier Base Period Revenue shall be adjusted to reflect the removal of any increases in revenue requirement or revenues resulting from access stimulation activity the Rate-of-Return Carrier engaged in during the relevant measuring period. A Rate-of-Return Carrier should make this adjustment for its initial July 1, 2012, tariff filing, but the adjustment may result from a subsequent Commission or court ruling.

(d) *Eligible Recovery for Rate-of-Return Carriers.*(1) Notwithstanding any other provision of the Commission's rules, a Rate-of-Return Carrier may recover the amounts specified in this paragraph through the mechanisms described in paragraphs (e) and (f) of this section.

(i) Beginning July 1, 2012, a Rate-of-Return Carrier's eligible recovery will be equal to the 2011 Rate-of-Return Carrier Base Period Revenue multiplied by the Rate-of-Return Carrier Baseline Adjustment Factor less:

(A) The Expected Revenues from Transitional Intrastate Access Service for the year beginning July 1, 2012, reflecting forecasted demand multiplied by the rates in the rate transition contained in § 51.909;

(B) The Expected Revenues from interstate switched access for the year beginning July 1, 2012, reflecting forecasted demand multiplied by the rates in the rate transition contained in § 51.909; and

(C) Expected Net Reciprocal Compensation Revenues for the year beginning July 1, 2012 using the target methodology required by § 51.705.

(ii) Beginning July 1, 2013, a Rate-of-Return Carrier's eligible recovery will be equal to the 2011 Rate-of-Return Carrier Base Period Revenue multiplied by the Rate-of-Return Carrier Baseline Adjustment Factor less:

(A) The Expected Revenues from Transitional Intrastate Access Service for the year beginning July 1, 2013, reflecting forecasted demand multiplied by the rates in the rate transition contained in § 51.909;

(B) The Expected Revenues from interstate switched access for the year beginning July 1, 2013, reflecting forecasted demand multiplied by the rates in the rate transition contained in § 51.909; and

(C) Expected Net Reciprocal Compensation Revenues for the year beginning July 1, 2013 using the target methodology required by § 51.705.

(iii) Beginning July 1, 2014, a Rate-of-Return Carrier's eligible recovery will be equal to the 2011 Rate-of-Return Carrier Base Period Revenue multiplied by the Rate-of-Return Carrier Baseline Adjustment Factor less:

(A) The Expected Revenues from Transitional Intrastate Access Service for the year beginning July 1, 2014, reflecting forecasted demand multiplied by the rates in the rate transition contained in § 51.909 (including the reduction in intrastate End Office Switched Access Service rates), adjusted to reflect the True-Up Adjustment for Transitional Intrastate Access Service for the year beginning July 1, 2012;

(B) The Expected Revenues from interstate switched access for the year beginning July 1, 2014, reflecting forecasted demand multiplied by the rates in the rate transition contained in § 51.909, adjusted to reflect the True-Up

Adjustment for Interstate Switched Access for the year beginning July 1, 2012; and

(C) Expected Net Reciprocal Compensation Revenues for the year beginning July 1, 2014 using the target methodology required by §51.705, adjusted to reflect the True-Up Adjustment for Reciprocal Compensation for the year beginning July 1, 2012.

(D) An amount equal to True-up Revenues for Access Recovery Charges for the year beginning July 1, 2012 multiplied by negative one.

(iv) Beginning July 1, 2015, and for all subsequent years, a Rate-of-Return Carrier's eligible recovery will be calculated by updating the procedures set forth in paragraph (d)(1)(iii) of this section for the period beginning July 1, 2014, to reflect the passage of an additional year in each subsequent year.

(v) If a Rate-of-Return Carrier receives payments for intrastate or interstate switched access services or for Access Recovery Charges after the period used to measure the adjustments to reflect the differences between estimated and actual revenues, it shall treat such payments as actual revenue in the year the payment is received and shall reflect this as an additional adjustment for that year.

(vi) If a Rate-of-Return Carrier receives or makes reciprocal compensation payments after the period used to measure the adjustments to reflect the differences between estimated and actual net reciprocal compensation revenues, it shall treat such amounts as actual revenues or payments in the year the payment is received or made and shall reflect this as an additional adjustment for that year.

(vii) If a Rate-of-Return Carrier recovers any costs or revenues that are already being recovered as Eligible Recovery through Access Recovery Charges or the Connect America Fund from another source, that carrier's ability to recover reduced switched access revenue from Access Recovery Charges or the Connect America Fund shall be reduced to the extent it receives duplicative recovery. Any duplicative recovery shall be reflected as a reduction to a carrier's Eligible Recovery calculated pursuant to §51.917(d). A Rate-of-Return Carrier seeking revenue recovery must annually certify as part of its tariff filings to the Commission and to the relevant state commission that the carrier is not seeking duplicative recovery in the state jurisdiction for any Eligible Recovery subject to the recovery mechanism.

(e) *Access Recovery Charge.* (1) A charge that is expressed in dollars and cents per line per month may be assessed upon end users that may be assessed a subscriber line charge pursuant to §69.104 of this chapter, to the extent necessary to allow the Rate-of-Return Carrier to recover some or all of its Eligible Recovery determined pursuant to paragraph (d) of this section, subject to the caps described in paragraph (e)(6) of this section. A Rate-of-Return Carrier may elect to forgo charging some or all of the Access Recovery Charge.

(2) Total Access Recovery Charges calculated by multiplying the tariffed Access Recovery Charge by the projected demand for the year may not recover more than the amount of eligible recovery calculated pursuant to paragraph (d) of this section for the year beginning on July 1.

(3) For the purposes of this section, a Rate-of-Return Carrier holding company includes all of its wholly-owned operating companies. A Rate-of-Return Carrier Holding Company may recover the eligible recovery attributable to any Rate-of-Return study areas operated by its wholly-owned operating companies that are Rate-of-Return incumbent local exchange carriers through assessments of the Access Recovery Charge on end users in any Rate-of-Return study areas operated by its wholly-owned operating companies that are Rate-of-Return incumbent local exchange carriers.

(4) Distribution of Access Recovery Charges among lines of different types

(i) A Rate-of-Return Carrier that does not receive ICC-replacement CAF support (whether because they elect not to or because they do not have sufficient eligible recovery after the Access Recovery Charge is assessed or imputed) may not recover a higher ratio of its total revenue recovery from Access Recovery Charges assessed on Residential and Single Line Business lines

than the following ratio (using holding company lines):

(A) The number of Residential and Single-Line Business lines assessed an End User Common Line charge (excluding Lifeline Customers), divided by

(B) The sum of the number of Residential and Single-Line Business lines assessed an End User Common Line charge (excluding Lifeline Customers), and two (2) times the number of End User Common Line charges assessed on Multi-Line Business customers.

(5) For purposes of this subpart, Residential and Single Line Business lines are lines (other than lines of Lifeline Customers) assessed the residential and single line business end user common line charge.

(i) For purposes of this subpart, Multi-Line Business Lines are lines assessed the multi-line business end user common line charge.

(ii) [Reserved]

(6) *Per-line caps and other limitations on Access Recovery Charges.*(i) For each line other than lines of Lifeline Customers assessed a primary residential or single-line business end user common line charge pursuant to § 69.104 of this chapter, a Rate-of-Return Carrier may assess an Access Recovery Charge as follows:

(A) Beginning July 1, 2012, a maximum of $0.50 per month for each line;

(B) Beginning July 1, 2013, a maximum of $1.00 per month for each line;

(C) Beginning July 1, 2014, a maximum of $1.50 per month for each line;

(D) Beginning July 1, 2015, a maximum of $2.00 per month for each line;

(E) Beginning July 1, 2016, a maximum of $2.50 per month for each line; and

(F) Beginning July 1, 2017, a maximum of $3.00 per month for each line.

(ii) For each line assessed a multi-line business end user common line charge pursuant to § 69.104 of this chapter, a Rate-of-Return Carrier may assess an Access Recovery Charge as follows:

(A) Beginning July 1, 2012, a maximum of $1.00 per month for each multi-line business end user common line charge assessed;

(B) Beginning July 1, 2013, a maximum of $2.00 per month for each multi-line business end user common line charge assessed;

(C) Beginning July 1, 2014, a maximum of $3.00 per month for each multi-line business end user common line charge assessed;

(D) Beginning July 1, 2015, a maximum of $4.00 per month for each multi-line business end user common line charge assessed;

(E) Beginning July 1, 2016, a maximum of $5.00 per month for each multi-line business end user common line charge assessed; and

(F) Beginning July 1, 2017, a maximum of $6.00 per month for each multi-line business end user common line charge assessed.

(iii) The Access Recovery Charge allowed by paragraph (e)(6)(i) of this section may not be assessed to the extent that its assessment would bring the total of the Rate Ceiling Component Charges above the Residential Rate Ceiling. This limitation does not apply to single-line business customers.

(iv) The Access Recovery Charge allowed by paragraph (e)(6)(ii) of this section may not be assessed to the extent that its assessment would bring the total of the multi-line business end user common line charge and the Access Recovery Charge above $12.20 per line.

(v) The Access Recovery Charge may not be assessed on lines of Lifeline Customers.

(vi) If in any year, the Rate of return carriers' Access Recovery Charge is not at its maximum, the succeeding year's Access Recovery Charge may not increase more than $0.50 per line for charges under paragraph (e)(6)(i) of this section or $1.00 per line for charges assessed under paragraph (e)(6)(ii) of this section.

(vii) A Price Cap Carrier with study areas that are subject to rate-of-return regulation shall recover its eligible recovery for such study areas through the recovery procedures specified in this section. For that purpose, the provisions of paragraph (e)(3) of this section shall apply to the rate-of-return study areas if the applicable conditions in paragraph (e)(3) of this section are met.

(f) *Rate-of-Return Carrier eligibility for CAF ICC Recovery.* (1) A Rate-of-Return

Carrier shall elect in its July 1, 2012 access tariff filing whether it will receive CAF ICC Support under this paragraph. A Rate-of-Return Carrier eligible to receive CAF ICC Support subsequently may elect at any time not to receive such funding. Once it makes the election not to receive CAF ICC Support, it may not elect to receive such funding at a later date.

(2) Beginning July 1, 2012, a Rate-of-Return Carrier may recover any eligible recovery allowed by paragraph (d) of this section that it could not have recovered through charges assessed pursuant to paragraph (e) of this section from CAF ICC Support pursuant to § 54.304. For this purpose, the Rate-of-Return Carrier must impute the maximum charges it could have assessed under paragraph (e) of this section.

(3) A Rate-of-Return Carrier that elects to receive CAF ICC support must certify with its annual access tariff filing that it has complied with paragraphs (d) and (e), and, after doing so, is eligible to receive the CAF ICC support requested pursuant to paragraph (f) of this section.

[76 FR 73856, Nov. 29, 2011, as amended at 77 FR 14302, Mar. 9, 2012; 78 FR 26268, May 6, 2013; 79 FR 28847, May 20, 2014]

§ 51.919 Reporting and monitoring.

(a) A Price Cap Carrier that elects to participate in the recovery mechanism outlined in § 51.915 shall, beginning in 2012, file with the Commission the data consistent with Section XIII (f)(3) of FCC 11–161 with its annual access tariff filing.

(b) A Rate-of-Return Carrier that elects to participate in the recovery mechanism outlined in § 51.917 shall file with the Commission the data consistent with Section XIII (f)(3) of FCC 11–161 with its annual interstate access tariff filing, or on the date such a filing would have been required if it had been required to file in that year.

EFFECTIVE DATE NOTE: At 76 FR 73856, Nov. 29, 2011, § 51.919 was added. This section contains information collection and recordkeeping requirements and will not become effective until approval has been given by the Office of Management and Budget.

PART 52—NUMBERING

Subpart A—Scope and Authority

Sec.
52.1 Basis and purpose.
52.3 General.
52.5 Definitions.

Subpart B—Administration

52.7 Definitions.
52.9 General requirements.
52.11 North American Numbering Council.
52.12 North American Numbering Plan Administrator and B&C Agent.
52.13 North American Numbering Plan Administrator.
52.15 Central office code administration.
52.16 Billing and Collection Agent.
52.17 Costs of number administration.
52.19 Area code relief.

Subpart C—Number Portability

52.20 Thousands-block number pooling.
52.21 Definitions.
52.23 Deployment of long-term database methods for number portability by LECs.
52.25 Database architecture and administration.
52.26 NANC Recommendations on Local Number Portability Administration.
52.31 Deployment of long-term database methods for number portability by CMRS providers.
52.32 Allocation of the shared costs of long-term number portability.
52.33 Recovery of carrier-specific costs directly related to providing long-term number portability.
52.34 Obligations regarding local number porting to and from interconnected VoIP or Internet-based TRS providers.
52.35 Porting Intervals.
52.36 Standard data fields for simple port order processing.
52.37–52.99 [Reserved]

Subpart D—Toll Free Numbers

52.101 General definitions.
52.103 Lag times.
52.105 Warehousing.
52.107 Hoarding.
52.109 Permanent cap on number reservations.
52.111 Toll free number assignment.
APPENDIX TO PART 52—DEPLOYMENT SCHEDULE FOR LONG-TERM DATABASE METHODS FOR LOCAL NUMBER PORTABILITY

AUTHORITY: Secs. 1, 2, 4, 5, 48 Stat. 1066, as amended; 47 U.S.C. 151, 152, 154 and 155 unless otherwise noted. Interpret or apply secs. 3, 4, 201–05, 207–09, 218, 225–27, 251–52, 271 and 332, 48 Stat. 1070, as amended, 1077; 47 U.S.C. 153,

154, 201–05, 207–09, 218, 225–27, 251–52, 271 and 332 unless otherwise noted.

SOURCE: 61 FR 38637, July 25, 1996, unless otherwise noted.

Subpart A—Scope and Authority

SOURCE: 61 FR 47353, Sept. 6, 1996, unless otherwise noted.

§ 52.1 Basis and purpose.

(a) *Basis*. These rules are issued pursuant to the Communications Act of 1934, as amended, 47 U.S.C. 151 *et. seq*.

(b) *Purpose*. The purpose of these rules is to establish, for the United States, requirements and conditions for the administration and use of telecommunications numbers for provision of telecommunications services.

§ 52.3 General.

The Commission shall have exclusive authority over those portions of the North American Numbering Plan (NANP) that pertain to the United States. The Commission may delegate to the States or other entities any portion of such jurisdiction.

§ 52.5 Definitions.

As used in this part:

(a) *Incumbent local exchange carrier*. With respect to an area, an ''incumbent local exchange carrier'' is a local exchange carrier that:

(1) On February 8, 1996, provided telephone exchange service in such area; and

(2)(i) On February 8, 1996, was deemed to be a member of the exchange carrier association pursuant to § 69.601(b) of this chapter (47 CFR 69.601(b)); or

(ii) Is a person or entity that, on or after February 8, 1996, became a successor or assign of a member described in paragraph (a)(2)(i) of this section.

(b) *North American Numbering Council* (NANC). The ''North American Numbering Council'' is an advisory committee created under the Federal Advisory Committee Act, 5 U.S.C., App (1988), to advise the Commission and to make recommendations, reached through consensus, that foster efficient and impartial number administration.

(c) *North American Numbering Plan* (NANP). The ''North American Numbering Plan'' is the basic numbering scheme for the telecommunications networks located in American Samoa, Anguilla, Antigua, Bahamas, Barbados, Bermuda, British Virgin Islands, Canada, Cayman Islands, Dominica, Dominican Republic, Grenada, Jamaica, Montserrat, St. Kitts & Nevis, St. Lucia, St. Vincent, Turks & Caicos Islands, Trinidad & Tobago, and the United States (including Puerto Rico, the U.S. Virgin Islands, Guam, the Commonwealth of the Northern Mariana Islands).

(d) *State*. The term ''state'' includes the District of Columbia and the Territories and possessions.

(e) *State commission*. The term ''state commission'' means the commission, board, or official (by whatever name designated) which under the laws of any state has regulatory jurisdiction with respect to intrastate operations of carriers.

(f) *Telecommunications*. ''Telecommunications'' means the transmission, between or among points specified by the user, of information of the user's choosing, without change in the form or content of the information as sent and received.

(g) *Telecommunications carrier*. A ''telecommunications carrier'' is any provider of telecommunications services, except that such term does not include aggregators of telecommunications services (as defined in 47 U.S.C. 226(a)(2)).

(h) *Telecommunications service*. The term ''telecommunications service'' refers to the offering of telecommunications for a fee directly to the public, or to such classes of users as to be effectively available directly to the public, regardless of the facilities used.

(i) *Service provider*. The term ''service provider'' refers to a telecommunications carrier or other entity that receives numbering resources from the NANPA, a Pooling Administrator or a telecommunications carrier for the purpose of providing or establishing telecommunications service.

[61 FR 47353, Sept. 6, 1996, as amended at 65 FR 37707, June 16, 2000; 71 FR 65750, Nov. 9, 2006]

Subpart B—Administration

SOURCE: 61 FR 47353, Sept. 6, 1996, unless otherwise noted.

§52.7 Definitions.

As used in this subpart:

(a) *Area code or numbering plan area* (NPA). The term ''area code or numbering plan area'' refers to the first three digits (NXX) of a ten-digit telephone number in the form NXX-NXX-XXXX, where N represents any one of the numbers 2 through 9 and X represents any one of the numbers 0 through 9.

(b) *Area code relief*. The term ''area code relief'' refers to the process by which central office codes are made available when there are few or no unassigned central office codes remaining in an existing area code and a new area code is introduced. Area code relief includes planning for area code ''jeopardy,'' which is a situation where central office codes may become exhausted before an area code relief plan can be implemented.

(c) *Central office (CO) code*. The term ''central office code'' refers to the second three digits (NXX) of a ten-digit telephone number in the form NXX-NXX-XXXX, where N represents any one of the numbers 2 through 9 and X represents any one of the numbers 0 through 9.

(d) *Central office (CO) code administrator*. The term ''central office code administrator'' refers to the entity or entities responsible for managing central office codes in each area code.

(e) *North American Numbering Plan Administrator* (NANPA). The term ''North American Numbering Plan Administrator'' refers to the entity or entities responsible for managing the NANP.

(f) *Billing and Collection Agent*. The term ''Billing & Collection Agent'' (''B&C Agent'') refers to the entity responsible for the collection of funds to support numbering administration for telecommunications services from the United States telecommunications industry and NANP member countries.

(g) *Pooling Administrator (PA)*. The term ''Pooling Administrator'' refers to the entity or entities responsible for administering a thousands-block number pool.

(h) *Contamination*. Contamination occurs when at least one telephone number within a block of telephone numbers is not available for assignment to end users or customers. For purposes of this provision, a telephone number is ''not available for assignment'' if it is classified as administrative, aging, assigned, intermediate, or reserved as defined in §52.15(f)(1).

(i) *Donation*. The term ''donation'' refers to the process by which carriers are required to contribute telephone numbers to a thousands-block number pool.

(j) *Inventory*. The term ''inventory'' refers to all telephone numbers distributed, assigned or allocated:

(1) To a service provider; or

(2) To a pooling administrator for the purpose of establishing or maintaining a thousands-block number pool.

[61 FR 47353, Sept. 6, 1996, as amended at 62 FR 55180, Oct. 23, 1997; 65 FR 37707, June 16, 2000]

§52.9 General requirements.

(a) To ensure that telecommunications numbers are made available on an equitable basis, the administration of telecommunications numbers shall, in addition to the specific requirements set forth in this subpart:

(1) Facilitate entry into the telecommunications marketplace by making telecommunications numbering resources available on an efficient, timely basis to telecommunications carriers;

(2) Not unduly favor or disfavor any particular telecommunications industry segment or group of telecommunications consumers; and

(3) Not unduly favor one telecommunications technology over another.

(b) If the Commission delegates any telecommunications numbering administration functions to any State or other entity pursuant to 47 U.S.C. 251(e)(1), such State or entity shall perform these functions in a manner consistent with this part.

§ 52.11 North American Numbering Council.

The duties of the North American Numbering Council (NANC), may include, but are not limited to:

(a) Advising the Commission on policy matters relating to the administration of the NANP in the United States;

(b) Making recommendations, reached through consensus, that foster efficient and impartial number administration;

(c) Initially resolving disputes, through consensus, that foster efficient and impartial number administration in the United States by adopting and utilizing dispute resolution procedures that provide disputants, regulators, and the public notice of the matters at issue, a reasonable opportunity to make oral and written presentations, a reasoned recommended solution, and a written report summarizing the recommendation and the reasons therefore;

(d) [Reserved]

(e) Recommending to the Commission an appropriate mechanism for recovering the costs of NANP administration in the United States, consistent with § 52.17;

(f) Carrying out the duties described in § 52.25; and

(g) Carrying out this part as directed by the Commission;

(h) Monitoring the performance of the NANPA and the B&C Agent on at least an annual basis; and

(i) Implementing, at the direction of the Commission, any action necessary to correct identified problems with the performance of the NANPA and the B&C Agent, as deemed necessary.

[61 FR 47353, Sept. 6, 1996, as amended at 62 FR 55180, Oct. 23, 1997; 71 FR 65750, Nov. 9, 2006]

§ 52.12 North American Numbering Plan Administrator and B&C Agent.

The North American Numbering Plan Administrator (''NANPA'') and the associated ''B&C Agent'' will conduct their respective operations in accordance with this section. The NANPA and the B&C Agent will conduct their respective operations with oversight from the Federal Communications Commission (the ''Commission'') and with recommendations from the North American Numbering Council (''NANC'').

(a)(1) *Neutrality*. The NANPA and the B&C Agent shall be non-governmental entities that are impartial and not aligned with any particular telecommunication industry segment. Accordingly, while conducting their respective operations under this section, the NANPA and B&C Agent shall ensure that they comply with the following neutrality criteria:

(i) The NANPA and B&C Agent may not be an affiliate of any telecommunications service provider(s) as defined in the Telecommunications Act of 1996, or an affiliate of any interconnected VoIP provider as that term is defined in § 52.21(h). ''Affiliate'' is a person who controls, is controlled by, or is under the direct or indirect common control with another person. A person shall be deemed to control another if such person possesses, directly or indirectly—

(A) An equity interest by stock, partnership (general or limited) interest, joint venture participation, or member interest in the other person ten (10%) percent or more of the total outstanding equity interests in the other person, or

(B) The power to vote ten (10%) percent or more of the securities (by stock, partnership (general or limited) interest, joint venture participation, or member interest) having ordinary voting power for the election of directors, general partner, or management of such other person, or

(C) The power to direct or cause the direction of the management and policies of such other person, whether through the ownership of or right to vote voting rights attributable to the stock, partnership (general or limited) interest, joint venture participation, or member interest) of such other person, by contract (including but not limited to stockholder agreement, partnership (general or limited) agreement, joint venture agreement, or operating agreement), or otherwise;

(ii) The NANPA and B&C Agent, and any affiliate thereof, may not issue a majority of its debt to, nor may it derive a majority of its revenues from, any telecommunications service provider. ''Majority'' shall mean greater than 50 percent, and ''debt'' shall mean

stocks, bonds, securities, notes, loans or any other instrument of indebtedness; and

(iii) Notwithstanding the neutrality criteria set forth in paragraphs (a)(1)(i) and (ii) of this section, the NANPA and B&C Agent may be determined to be or not to be subject to undue influence by parties with a vested interest in the outcome of numbering administration and activities. NANC may conduct an evaluation to determine whether the NANPA and B&C Agent meet the undue influence criterion.

(2) Any subcontractor that performs—

(i) NANP administration and central office code administration, or

(ii) Billing and Collection functions, for the NANPA or for the B&C Agent must also meet the neutrality criteria described in paragraph (a)(1).

(b) *Term of administration.* The NANPA shall provide numbering administration, including central office code administration, for the United States portion of the North American Numbering Plan (''NANP'') for an initial period of five (5) years. At any time prior to the termination of the initial or subsequent term of administration, such term may be renewed for up to five (5) years with the approval of the Commission and the agreement of the NANPA. The B&C Agent shall provide billing and collection functions for an initial period of five (5) years. At any time prior to the termination of the initial or subsequent term of administration, such term may be renewed for up to five (5) years with the approval of the Commission and the agreement of the B&C Agent.

(c) *Changes to regulations, rules, guidelines or directives.* In the event that regulatory authorities or industry groups (including, for example, the Industry Numbering Committee—INC, or its successor) issue rules, requirements, guidelines or policy directives which may affect the functions performed by the NANPA and the B&C Agent, the NANPA and the B&C Agent shall, within 10 business days from the date of official notice of such rules, requirements, guidelines or policy directives, assess the impact on its operations and advise the Commission of any changes required. NANPA and the B&C Agent shall provide written explanation why such changes are required. To the extent the Commission deems such changes are necessary, the Commission will recommend to the NANP member countries appropriate cost recovery adjustments, if necessary.

(d) *Performance review process.* NANPA and the B&C Agent shall develop and implement an internal, documented performance monitoring mechanism and shall provide such performance review on request of the Commission on at least an annual basis. The annual assessment process will not preclude telecommunications industry participants from identifying performance problems to the NANPA, the B&C Agent and the NANC as they occur, and from seeking expeditious resolution. If performance problems are identified by a telecommunications industry participant, the NANC, B&C Agent or NANPA shall investigate and report within 10 business days of notice to the participant of corrective action, if any, taken or to be taken. The NANPA, B&C Agent or NANC (as appropriate) shall be permitted reasonable time to take corrective action, including the necessity of obtaining the required consent of the Commission.

(e) *Termination.* If the Commission determines at any time that the NANPA or the B&C Agent fails to comply with the neutrality criteria set forth in paragraph (a) of this section or substantially or materially defaults in the performance of its obligations, the Commission shall advise immediately the NANPA or the B&C Agent of said failure or default, request immediate corrective action, and permit the NANPA or B&C Agent reasonable time to correct such failure or default. If the NANPA or B&C Agent is unwilling or unable to take corrective action, the Commission may, in a manner consistent with the requirements of the Administrative Procedure Act and the Communications Act of 1934, as amended, take any action that it deems appropriate, including termination of the NANPA's or B&C Agent's term of administration.

(f) *Required and optional enterprise services.* Enterprise Services, which are services beyond those described in § 52.13 that may be provided by the new

NANPA for specified fees, may be offered with prior approval of the Commission.

(1) *Required Enterprise Services.* At the request of a code holder, the NANPA shall, in accordance with industry standards and for reasonable fees, enter certain routing and rating information, into the industry-approved database(s) for dissemination of such information. This task shall include reviewing the information and assisting in its preparation.

(2) *Optional Enterprise Services.* The NANPA may, subject to prior approval and for reasonable fees, offer ''Optional Enterprise Services'' which are any services not described elsewhere in this section.

(3) *Annual report.* NANPA shall identify and record all direct costs associated with providing Enterprise Services separately from the costs associated with the non-enterprise NANPA functions. The NANPA shall submit an annual report to the NANC summarizing the revenues and costs for providing each Enterprise Service. NANPA shall be audited by an independent auditor after the first year of operations and every two years thereafter, and submit the report to the Commission for appropriate review and action.

[63 FR 55180, Oct. 23, 1997, as amended at 73 FR 9481, Feb. 21, 2008]

§ 52.13 North American Numbering Plan Administrator.

(a) The North American Numbering Plan Administrator (NANPA) shall be an independent and impartial non-government entity.

(b) The NANPA shall administer the numbering resources identified in paragraph (d) of this section. It shall assign and administer NANP resources in an efficient, effective, fair, unbiased, and non-discriminatory manner consistent with industry-developed guidelines and Commission regulations. It shall support the Commission's efforts to accommodate current and future numbering needs. It shall perform additional functions, including but not limited to:

(1) Ensuring the efficient and effective administration and assignment of numbering resources by performing day-to-day number resource assignment and administrative activities;

(2) Planning for the long-term need for NANP resources to ensure the continued viability of the NANP by implementing a plan for number resource administration that uses effective forecasting and management skills in order to make the industry aware of the availability of numbering resources and to meet the current and future needs of the industry;

(3) Complying with guidelines of the North American Industry Numbering Committee (INC) or its successor, related industry documentation, Commission regulations and orders, and the guidelines of other appropriate policymaking authorities;

(4) Providing management supervision for all of the services it provides, including responsibility for achieving performance measures established by the NANC and the INC in industry guidelines;

(5) Participating in the NANC annual performance review as described in §§ 52.11 and 52.12;

(6) Establishing and maintaining relationships with current governmental and regulatory bodies, and their successors, including the United States Federal Communications Commission, Industry Canada, the Canadian Radiotelevision and Telecommunications Commission, and other United States, Canadian, and Caribbean numbering authorities and regulatory agencies, and addressing policy directives from these bodies;

(7) Cooperating with and actively participating in numbering standards bodies and industry fora, such as INC and, upon request, the Canadian Steering Committee on Numbering (CSCN);

(8) Representing the NANP to national and international numbering bodies;

(9) Developing and maintaining communications channels with other countries who also participate in the NANP to ensure that numbering needs of all countries served by the NANP are met;

(10) Attending United States Study Group A meetings and maintaining a working knowledge of Study Group 2 International Telecommunications Union activities on behalf of the

United States telecommunications industry;

(11) Reviewing requests for all numbering resources to implement new applications and services and making assignments in accordance with industry-developed resource planning and assignment guidelines;

(12) Referring requests for particular numbering resources to the appropriate industry body where guidelines do not exist for those resources;

(13) Participating in industry activities to determine whether, when new telecommunications services requiring numbers are proposed, NANP numbers are appropriate and what level of resource is required (e.g., line numbers, central office codes, NPA codes);

(14) Maintaining necessary administrative staff to handle the legal, financial, technical, staffing, industry, and regulatory issues relevant to the management of all numbering resources, as well as maintaining the necessary equipment, facilities, and proper billing arrangements associated with day-to-day management of all numbering resources;

(15) Managing the NANP in accordance with published guidelines adopted in conjunction with the industry and the appropriate NANP member countries' governing agencies, and referring issues to the appropriate industry body for resolution when they have not been addressed by the industry;

(16) Responding to requests from the industry and from regulators for information about the NANP and its administration, as the primary repository for numbering information in the industry;

(17) Providing upon request information regarding how to obtain current documents related to NANP administration;

(18) Providing assistance to users of numbering resources and suggesting numbering administration options, when possible, that will optimize number resource utilization;

(19) Coordinating its numbering resource activities with the Canadian Number Administrator and other NANP member countries' administrators to ensure efficient and effective management of NANP numbering resources; and

(20) Determining the final allocation methodology for sharing costs between NANP countries.

(c) In performing the functions outlined in paragraph (b) of this section, the NANPA shall:

(1) Ensure that the interests of all NANP member countries are considered;

(2) Assess fairly requests for assignments of NANP numbering resources and ensure the assignment of numbering resources to appropriate service providers;

(3) Develop, operate and maintain the computer hardware, software (database) and mechanized systems required to perform the NANPA and central office (CO) Code Administration functions;

(4) Manage projects such as Numbering Plan Area (NPA) relief (area code relief) planning, Numbering Resource Utilization and Forecast (NRUF) data collection, and NPA and NANP exhaust projection;

(5) Facilitate NPA relief planning meetings;

(6) Participate in appropriate industry activities;

(7) Manage proprietary data and competitively sensitive information and maintain the confidentiality thereof;

(8) Act as an information resource for the industry concerning all aspects of numbering (i.e., knowledge and experience in numbering resource issues, International Telecommunications Union (ITU) Recommendation E.164, the North American Numbering Plan (NANP), NANP Administration, INC, NANP area country regulatory issues affecting numbering, number resource assignment guidelines, central office code administration, relief planning, international numbering issues, etc.); and

(9) Ensure that any action taken with respect to number administration is consistent with this part.

(d) The NANPA and, to the extent applicable, the B&C Agent, shall administer numbering resources in an efficient and non-discriminatory manner, in accordance with Commission rules and regulations and the guidelines developed by the INC and other industry groups pertaining to administration

and assignment of numbering resources, including, but not limited to:

(1) Numbering Plan Area (NPA) codes,

(2) Central Office codes for the 809 area,

(3) International Inbound NPA 456 NXX codes,

(4) (NPA) 500 NXX codes,

(5) (NPA) 900 NXX codes,

(6) N11 Service codes,

(7) 855–XXXX line numbers,

(8) 555–XXXX line numbers,

(9) Carrier Identification Codes,

(10) Vertical Service Codes,

(11) ANI Information Integer (II) Digit Pairs,

(12) Non Dialable Toll Points, and

(13) New numbering resources as may be defined.

(e) *Relationships with other NANP member countries' administrators and authorities.* The NANPA shall address policy directives from other NANP member countries' governmental and regulatory authorities and coordinate its activities with other NANP member countries' administrators, if any, to ensure efficient and effective management of NANP resources.

(f) *Transition plan.* The NANPA shall implement a transition plan, subject to Commission approval, leading to its assumption of NANPA functions within 90 days of the effective date of a Commission order announcing the selection of the NANPA.

(g) *Transfer of intellectual property.* The new NANPA must make available any and all intellectual property and associated hardware resulting from its activities as numbering administrator including, but not limited to, systems and the data contained therein, software, interface specifications and supporting documentation and make such property available to whomever NANC directs free of charge. The new NANPA must specify any intellectual property it proposes to exclude from the provisions of this paragraph based on the existence of such property prior to its selection as NANPA.

[61 FR 47353, Sept. 6, 1996, as amended at 62 FR 55181, Oct. 23, 1997; 71 FR 65750, Nov. 9, 2006]

§ 52.15 Central office code administration.

(a) Central Office Code Administration shall be performed by the NANPA, or another entity or entities, as designated by the Commission.

(b) Duties of the entity or entities performing central office code administration may include, but are not limited to:

(1) Processing central office code assignment applications and assigning such codes in a manner that is consistent with this part;

(2) Accessing and maintaining central office code assignment databases;

(3) Conducting the Numbering Resource Utilization and Forecast (NRUF) data collection;

(4) Monitoring the use of central office codes within each area code and forecasting the date by which all central office codes within that area code will be assigned; and

(5) Planning for and initiating area code relief, consistent with § 52.19.

(c) [Reserved]

(d) *Central Office (CO) Code Administration functional requirements.* The NANPA shall manage the United States CO code numbering resource, including CO code request processing, NPA code relief and jeopardy planning, and industry notification functions. The NANPA shall perform its CO Code administration functions in accordance with the published industry numbering resource administration guidelines and Commission orders and regulations of 47 CFR chapter I.

(e) [Reserved]

(f) *Mandatory reporting requirements*—(1) *Number use categories.* Numbering resources must be classified in one of the following categories:

(i) *Administrative numbers* are numbers used by telecommunications carriers to perform internal administrative or operational functions necessary to maintain reasonable quality of service standards.

(ii) *Aging numbers* are disconnected numbers that are not available for assignment to another end user or customer for a specified period of time. Numbers previously assigned to residential customers may be aged for no more than 90 days. Numbers previously

assigned to business customers may be aged for no more than 365 days.

(iii) *Assigned numbers* are numbers working in the Public Switched Telephone Network under an agreement such as a contract or tariff at the request of specific end users or customers for their use, or numbers not yet working but having a customer service order pending. Numbers that are not yet working and have a service order pending for more than five days shall not be classified as assigned numbers.

(iv) *Available numbers* are numbers that are available for assignment to subscriber access lines, or their equivalents, within a switching entity or point of interconnection and are not classified as assigned, intermediate, administrative, aging, or reserved.

(v) *Intermediate numbers* are numbers that are made available for use by another telecommunications carrier or non-carrier entity for the purpose of providing telecommunications service to an end user or customer. Numbers ported for the purpose of transferring an established customer's service to another service provider shall not be classified as intermediate numbers.

(vi) *Reserved numbers* are numbers that are held by service providers at the request of specific end users or customers for their future use. Numbers held for specific end users or customers for more than 180 days shall not be classified as reserved numbers.

(2) *Reporting carrier*. The term ''reporting carrier'' refers to a telecommunications carrier that receives numbering resources from the NANPA, a Pooling Administrator or another telecommunications carrier.

(3) *Data collection procedures*. (i) Reporting carriers shall report utilization and forecast data to the NANPA.

(ii) Reporting shall be by separate legal entity and must include company name, company headquarters address, Operating Company Number (OCN), parent company OCN, and the primary type of business in which the reporting carrier is engaged. The term ''parent company'' refers to the highest related legal entity located within the state for which the reporting carrier is reporting data.

(iii) All data shall be filed electronically in a format approved by the Common Carrier Bureau.

(4) *Forecast data reporting*. (i) Reporting carriers shall submit to the NANPA a five-year forecast of their yearly numbering resource requirements.

(ii) In areas where thousands-block number pooling has been implemented:

(A) Reporting carriers that are required to participate in thousands-block number pooling shall report forecast data at the thousands-block (NXX-X) level per rate center;

(B) Reporting carriers that are not required to participate in thousands-block number pooling shall report forecast data at the central office code (NXX) level per rate center.

(iii) In areas where thousands-block number pooling has not been implemented, reporting carriers shall report forecast data at the central office code (NXX) level per NPA.

(iv) Reporting carriers shall identify and report separately initial numbering resources and growth numbering resources.

(5) *Utilization data reporting*. (i) Reporting carriers shall submit to the NANPA a utilization report of their current inventory of numbering resources. The report shall classify numbering resources in the following number use categories: *assigned*, *intermediate*, *reserved*, *aging*, and *administrative*.

(ii) Rural telephone companies, as defined in the Communications Act of 1934, as amended, 47 U.S.C. 153(37), that provide telecommunications service in areas where local number portability has not been implemented shall report utilization data at the central office code (NXX) level per rate center in those areas.

(iii) All other reporting carriers shall report utilization data at the thousands-block (NXX-X) level per rate center.

(6) *Reporting frequency*. (i) Reporting carriers shall file forecast and utilization reports semi-annually on or before February 1 for the preceding reporting period ending on December 31, and on

or before August 1 for the preceding reporting period ending on June 30. Mandatory reporting shall commence August 1, 2000.

(ii) State commissions may reduce the reporting frequency for NPAs in their states to annual. Reporting carriers operating in such NPAs shall file forecast and utilization reports annually on or before August 1 for the preceding reporting period ending on June 30, commencing August 1, 2000.

(iii) A state commission seeking to reduce the reporting frequency pursuant to paragraph (f) (6)(ii) of this section shall notify the Wireline Competition Bureau and the NANPA in writing prior to reducing the reporting frequency.

(7) *Access to data and confidentiality*—States shall have access to data reported to the NANPA provided that they have appropriate protections in place to prevent public disclosure of disaggregated, carrier-specific data.

(g) *Applications for numbering resources*—(1) *General requirements*. All applications for numbering resources must include the company name, company headquarters address, OCN, parent company's OCN(s), and the primary type of business in which the numbering resources will be used.

(2) *Initial numbering resources*. Applications for initial numbering resources shall include evidence that:

(i) The applicant is authorized to provide service in the area for which the numbering resources are being requested; and

(ii) The applicant is or will be capable of providing service within sixty (60) days of the numbering resources activation date.

(3) *Growth numbering resources*. (i) Applications for growth numbering resources shall include:

(A) A Months-to-Exhaust Worksheet that provides utilization by rate center for the preceding six months and projected monthly utilization for the next twelve (12) months; and

(B) The applicant's current numbering resource utilization level for the rate center in which it is seeking growth numbering resources.

(ii) The numbering resource utilization level shall be calculated by dividing all *assigned numbers* by the total numbering resources in the applicant's inventory and multiplying the result by 100. Numbering resources activated in the Local Exchange Routing Guide (LERG) within the preceding 90 days of reporting utilization levels may be excluded from the utilization calculation.

(iii) All service providers shall maintain no more than a six-month inventory of telephone numbers in each rate center or service area in which it provides telecommunications service.

(iv) The NANPA shall withhold numbering resources from any U.S. carrier that fails to comply with the reporting and numbering resource application requirements established in this part. The NANPA shall not issue numbering resources to a carrier without an OCN. The NANPA must notify the carrier in writing of its decision to withhold numbering resources within ten (10) days of receiving a request for numbering resources. The carrier may challenge the NANPA's decision to the appropriate state regulatory commission. The state commission may affirm or overturn the NANPA's decision to withhold numbering resources from the carrier based on its determination of compliance with the reporting and numbering resource application requirements herein.

(4) *Non-compliance*. The NANPA shall withhold numbering resources from any U.S. carrier that fails to comply with the reporting and numbering resource application requirements established in this part. The NANPA shall not issue numbering resources to a carrier without an Operating Company Number (OCN). The NANPA must notify the carrier in writing of its decision to withhold numbering resources within ten (10) days of receiving a request for numbering resources. The carrier may challenge the NANPA's decision to the appropriate state regulatory commission. The state commission may affirm, or may overturn, the NANPA's decision to withhold numbering resources from the carrier based on its determination that the carrier has complied with the reporting and numbering resource application requirements herein. The state commission also may overturn the NANPA's decision to withhold numbering resources from the carrier based on its

determination that the carrier has demonstrated a verifiable need for numbering resources and has exhausted all other available remedies.

(5) *State access to applications.* State regulatory commissions shall have access to service provider's applications for numbering resources. The state commissions should request copies of such applications from the service providers operating within their states, and service providers must comply with state commission requests for copies of numbering resource applications. Carriers that fail to comply with a state commission request for numbering resource application materials shall be denied numbering resources.

(h) *National utilization threshold.* All applicants for growth numbering resources shall achieve a 60% utilization threshold, calculated in accordance with paragraph (g)(3)(ii) of this section, for the rate center in which they are requesting growth numbering resources. This 60% utilization threshold shall increase by 5% on June 30, 2002, and annually thereafter until the utilization threshold reaches 75%.

(i) *Reclamation of numbering resources.* (1) Reclamation refers to the process by which service providers are required to return numbering resources to the NANPA or the Pooling Administrator.

(2) State commissions may investigate and determine whether service providers have activated their numbering resources and may request proof from all service providers that numbering resources have been activated and assignment of telephone numbers has commenced.

(3) Service providers may be required to reduce contamination levels to facilitate reclamation and/or pooling.

(4) State commissions shall provide service providers an opportunity to explain the circumstances causing the delay in activating and commencing assignment of their numbering resources prior to initiating reclamation.

(5) The NANPA and the Pooling Administrator shall abide by the state commission's determination to reclaim numbering resources if the state commission is satisfied that the service provider has not activated and commenced assignment to end users of their numbering resources within six months of receipt.

(6) The NANPA and Pooling Administrator shall initiate reclamation within sixty days of expiration of the service provider's applicable activation deadline.

(7) If a state commission declines to exercise the authority delegated to it in this paragraph, the entity or entities designated by the Commission to serve as the NANPA shall exercise this authority with respect to NXX codes and the Pooling Administrator shall exercise this authority with respect to thousands-blocks. The NANPA and the Pooling Administrator shall consult with the Wireline Competition Bureau prior to exercising the authority delegated to it in this provision.

(j) *Sequential number assignment.* (1) All service providers shall assign all available telephone numbers within an opened thousands-block before assigning telephone numbers from an uncontaminated thousands-block, unless the available numbers in the opened thousands-block are not sufficient to meet a specific customer request. This requirement shall apply to a service provider's existing numbering resources as well as any new numbering resources it obtains in the future.

(2) A service provider that opens an uncontaminated thousands-block prior to assigning all available telephone numbers within an opened thousands-block should be prepared to demonstrate to the state commission:

(i) A genuine request from a customer detailing the specific need for telephone numbers; and

(ii) The service provider's inability to meet the specific customer request for telephone numbers from the available numbers within the service provider's opened thousands-blocks.

(3) Upon a finding by a state commission that a service provider inappropriately assigned telephone numbers from an uncontaminated thousands-block, the NANPA or the Pooling Administrator shall suspend assignment or allocation of any additional numbering resources to that service provider in the applicable NPA until the service provider demonstrates that it does not

have sufficient numbering resources to meet a specific customer request.

(k) *Numbering audits.* (1) All telecommunications service providers shall be subject to ''for cause'' and random audits to verify carrier compliance with Commission regulations and applicable industry guidelines relating to numbering administration.

(2) The Enforcement Bureau will oversee the conduct and scope of all numbering audits conducted under the Commission's jurisdiction, and determine the audit procedures necessary to perform the audit. Numbering audits performed by independent auditors pursuant to this section shall be conducted in accordance with generally accepted auditing standards and the American Institute of Certified Public Accountants' standards for compliance attestation engagements, as supplemented by the guidance and direction of the Chief of the Enforcement Bureau.

(3) Requests for ''for cause'' audits shall be forwarded to the Chief of the Enforcement Bureau, with a copy to the Chief of the Common Carrier Bureau. Requests must state the reason for which a ''for cause'' audit is being requested and include documentation of the alleged anomaly, inconsistency, or violation of the Commission rules or orders or applicable industry guidelines. The Chief of the Enforcement Bureau will provide carriers up to 30 days to provide a written response to a request for a ''for cause'' audit.

[61 FR 47353, Sept. 6, 1996, as amended at 62 FR 55182, Oct. 23, 1997; 65 FR 37707, June 16, 2000; 66 FR 9531, Feb. 8, 2001; 67 FR 6434, Feb. 12, 2002; 67 FR 13226, Mar. 21, 2002; 68 FR 25843, May 14, 2003; 71 FR 65750, Nov. 9, 2006]

§ 52.16 Billing and Collection Agent.

The B&C Agent shall:

(a) Calculate, assess, bill and collect payments for all numbering administration functions and distribute funds to the NANPA, or other agent designated by the Common Carrier Bureau that performs functions related to numbering administration, on a monthly basis;

(b) Distribute to carriers the ''Telecommunications Reporting Worksheet,'' described in § 52.17(b).

(c) Keep confidential all data obtained from carriers and not disclose such data in company-specific form unless authorized by the Commission. Subject to any restrictions imposed by the Chief of the Wireline Competition Bureau, the B & C Agent may share data obtained from carriers with the administrators of the universal service support mechanism (See 47 CFR 54.701 of this chapter), the TRS Fund (See 47 CFR 64.604(c)(4)(iii)(H) of this chapter), and the local number portability cost recovery (See 47 CFR 52.32). The B & C Agent shall keep confidential all data obtained from other administrators. The B & C Agent shall use such data, from carriers or administrators, only for calculating, collecting and verifying payments. The Commission shall have access to all data reported to the Administrator. Contributors may make requests for Commission nondisclosure of company-specific revenue information under § 0.459 of this chapter by so indicating on the Telecommunications Reporting Worksheet at the time that the subject data are submitted. The Commission shall make all decisions regarding nondisclosure of company-specific information.

(d) Develop procedures to monitor industry compliance with reporting requirements and propose specific procedures to address reporting failures and late payments;

(e) File annual reports with the appropriate regulatory authorities of the NANP member countries as requested; and

(f) Obtain an audit from an independent auditor after the first year of operations and annually thereafter, which shall evaluate the validity of calculated payments. The B&C Agent shall submit the audit report to the Commission for appropriate review and action.

(g) For the purposes of this rule, the term ''carrier(s)'' shall include interconnected VoIP providers as that term is defined in § 52.21(h).

[62 FR 55183, Oct. 23, 1997, as amended at 64 FR 41330, July 30, 1999; 66 FR 9532, Feb. 8, 2001; 67 FR 13226, Mar. 21, 2002; 73 FR 9481, Feb. 21, 2008]

§ 52.17 Costs of number administration.

All telecommunications carriers in the United States shall contribute on a competitively neutral basis to meet the costs of establishing numbering administration.

(a) Contributions to support numbering administration shall be the product of the contributors' end-user telecommunications revenues for the prior calendar year and a contribution factor determined annually by the Chief of the Common Carrier Bureau; such contributions to be no less than twenty-five dollars ($25). The contribution factor shall be based on the ratio of expected number administration expenses to end-user telecommunications revenues. Carriers that have no end-user telecommunications revenues shall contribute twenty-five dollars ($25). In the event that contributions exceed or are inadequate to cover administrative costs, the contribution factor for the following year shall be adjusted by an appropriate amount.

(b) All telecommunications carriers in the United States shall complete and submit a ''Telecommunications Reporting Worksheet'' (as published by the Commission in the FEDERAL REGISTER), which sets forth the information needed to calculate contributions referred to in paragraph (a) of this section. The worksheet shall be certified to by an officer of the contributor, and subject to verification by the Commission or the B & C Agent at the discretion of the Commission. The Chief of the Common Carrier Bureau may waive, reduce, modify, or eliminate contributor reporting requirements that prove unnecessary and require additional reporting requirements that the Bureau deems necessary to the sound and efficient administration of the number administration cost recovery.

(c) For the purposes of this section, the term ''telecommunications carrier'' or ''carrier'' shall include interconnected VoIP providers as that term is defined in § 52.21(h).

[64 FR 41331, July 30, 1999, as amended at 73 FR 9481, Feb. 21, 2008]

§ 52.19 Area code relief.

(a) State commissions may resolve matters involving the introduction of new area codes within their states. Such matters may include, but are not limited to: Directing whether area code relief will take the form of a geographic split, an overlay area code, or a boundary realignment; establishing new area code boundaries; establishing necessary dates for the implementation of area code relief plans; and directing public education efforts regarding area code changes.

(b) State commissions may perform any or all functions related to initiation and development of area code relief plans, so long as they act consistently with the guidelines enumerated in this part, and subject to paragraph (b)(2) of this section. For the purposes of this paragraph, initiation and development of area code relief planning encompasses all functions related to the implementation of new area codes that were performed by central office code administrators prior to February 8, 1996. Such functions may include: declaring that the area code relief planning process should begin; convening and conducting meetings to which the telecommunications industry and the public are invited on area code relief for a particular area code; and developing the details of a proposed area code relief plan or plans.

(1) The entity or entities designated by the Commission to serve as central office code administrator(s) shall initiate and develop area code relief plans for each area code in each state that has not notified such entity or entities, pursuant to paragraph (b)(2) of this section, that the state will handle such functions.

(2) Pursuant to paragraph (b)(1) of this section, a state commission must notify the entity or entities designated by the Commission to serve as central office code administrator(s) for its state that such state commission intends to perform matters related to initiation and development of area code relief planning efforts in its state. Notification shall be written and shall include a description of the specific functions the state commission intends to perform. Where the NANP Administrator serves as the central office code

administrator, such notification must be made within 120 days of the selection of the NANP Administrator.

(c) New area codes may be introduced through the use of:

(1) A geographic area code split, which occurs when the geographic area served by an area code in which there are few or no central office codes left for assignment is split into two or more geographic parts;

(2) An area code boundary realignment, which occurs when the boundary lines between two adjacent area codes are shifted to allow the transfer of some central office codes from an area code for which central office codes remain unassigned to an area code for which few or no central office codes are left for assignment; or

(3) An all services area code overlay, which occurs when a new area code is introduced to serve the same geographic area as one or more existing area code(s), subject to the following conditions:

(i) No all services area code overlay may be implemented unless all numbering resources in the new overlay area code are assigned to those entities requesting assignment on a first-come, first-serve basis, regardless of the identity of, technology used by, or type of service provided by that entity, except to the extent that a technology- or service-specific overlay is authorized by the Commission. No group of telecommunications carriers shall be excluded from assignment of numbering resources in the existing area code, or be assigned such resources only from the all services overlay area code, based solely on that group's provision of a specific type of telecommunications service or use of a particular technology; and

(ii) No area code overlay may be implemented unless there exists, at the time of implementation, mandatory ten-digit dialing for every telephone call within and between all area codes in the geographic area covered by the overlay area code.

(4) A technology-specific or service-specific overlay, which occurs when a new area code is introduced to serve the same geographic area as one or more existing area code(s) and numbering resources in the new area code overlay are assigned to a specific technology(ies) or service(s). State commissions may not implement a technology-specific or service-specific overlay without express authority from the Commission.

[61 FR 47353, Sept. 6, 1996, as amended at 64 FR 63617, Nov. 16, 1998; 64 FR 62984, Nov. 18, 1999; 67 FR 6434, Feb. 12, 2002]

Subpart C—Number Portability

SOURCE: 61 FR 38637, July 25, 1996, unless otherwise noted. Redesignated at 61 FR 47353, Sept. 6, 1996.

§ 52.20 Thousands-block number pooling.

(a) *Definition*. Thousands-block number pooling is a process by which the 10,000 numbers in a central office code (NXX) are separated into ten sequential blocks of 1,000 numbers each (thousands-blocks), and allocated separately within a rate center.

(b) *General requirements*. Pursuant to the Commission's adoption of thousands-block number pooling as a mandatory nationwide numbering resource optimization strategy, all carriers, except those exempted by the Commission, must participate in thousands-block number pooling where it is implemented and in accordance with the national thousands-block number pooling framework and implementation schedule established by the Commission.

(c) *Donation of thousands-blocks*. (1) All service providers required to participate in thousands-block number pooling shall donate thousands-blocks with ten percent or less contamination to the thousands-block number pool for the rate center within which the numbering resources are assigned.

(2) All service providers required to participate in thousands-block number pooling shall be allowed to retain at least one thousands-block per rate center, even if the thousands-block is ten percent or less contaminated, as an initial block or footprint block.

(d) *Thousands-Block Pooling Administrator*. (1) The Pooling Administrator shall be a non-governmental entity that is impartial and not aligned with any particular telecommunication industry segment, and shall comply with

the same neutrality requirements that the NANPA is subject to under this part.

(2) The Pooling Administrator shall maintain no more than a six-month inventory of telephone numbers in each thousands-block number pool.

[65 FR 37709, June 16, 2000, as amended at 66 FR 9532, Feb. 8, 2001; 68 FR 43009, July 21, 2003]

§ 52.21 Definitions.

As used in this subpart:

(a) The term *100 largest MSAs* includes the 100 largest MSAs as identified in the 1990 U.S. Census reports, as set forth in the Appendix to this part, as well as those areas identified as one of the largest 100 MSAs on subsequent updates to the U.S. Census reports.

(b) The term *broadband PCS* has the same meaning as that term is defined in § 24.5 of this chapter.

(c) The term *cellular service* has the same meaning as that term is defined in § 22.99 of this chapter.

(d) The term *covered CMRS* means broadband PCS, cellular, and 800/900 MHz SMR licensees that hold geographic area licenses or are incumbent SMR wide area licensees, and offer real-time, two-way switched voice service, are interconnected with the public switched network, and utilize an in-network switching facility that enables such CMRS systems to reuse frequencies and accomplish seamless hand-offs of subscriber calls.

(e) The term *database method* means a number portability method that utilizes one or more external databases for providing called party routing information.

(f) The term *downstream database* means a database owned and operated by an individual carrier for the purpose of providing number portability in conjunction with other functions and services.

(g) The term *incumbent wide area SMR licensee* has the same meaning as that term is defined in § 20.3 of this chapter.

(h) The term ''interconnected VoIP provider'' is an entity that provides interconnected VoIP service as that term is defined in 47 CFR 9.3.

(i) The term *IP Relay provider* means an entity that provides IP Relay as defined by 47 CFR 64.601.

(j) The term *local exchange carrier* means any person that is engaged in the provision of telephone exchange service or exchange access. For purposes of this subpart, such term does not include a person insofar as such person is engaged in the provision of a commercial mobile service under 47 U.S.C. 332(c).

(k) The term *local number portability administrator (LNPA)* means an independent, non-governmental entity, not aligned with any particular telecommunications industry segment, whose duties are determined by the NANC.

(l) The term *location portability* means the ability of users of telecommunications services to retain existing telecommunications numbers without impairment of quality, reliability, or convenience when moving from one physical location to another.

(m) The term *long-term database method* means a database method that complies with the performance criteria set forth in § 52.3(a).

(n) The term *number portability* means the ability of users of telecommunications services to retain, at the same location, existing telecommunications numbers without impairment of quality, reliability, or convenience when switching from one telecommunications carrier to another.

(o) The term *regional database* means an SMS database or an SMS/SCP pair that contains information necessary for carriers to provide number portability in a region as determined by the NANC.

(p) The term *Registered Internet-based TRS User* has the meaning set forth in 47 CFR 64.601.

(q) The term *service control point (SCP)* means a database in the public switched network which contains information and call processing instructions needed to process and complete a telephone call. The network switches access an SCP to obtain such information. Typically, the information contained in an SCP is obtained from the SMS.

(r) The term *service management system (SMS)* means a database or computer system not part of the public switched network that, among other things:

(1) Interconnects to an SCP and sends to that SCP the information and call processing instructions needed for a network switch to process and complete a telephone call; and

(2) Provides telecommunications carriers with the capability of entering and storing data regarding the processing and completing of a telephone call.

(s) The term *service portability* means the ability of users of telecommunications services to retain existing telecommunications numbers without impairment of quality, reliability, or convenience when switching from one telecommunications service to another, without switching from one telecommunications carrier to another.

(t) The term *service provider portability* means the ability of users of telecommunications services to retain, at the same location, existing telecommunications numbers without impairment of quality, reliability, or convenience when switching from one telecommunications carrier to another.

(u) The term *transitional number portability measure* means a method that allows one local exchange carrier to transfer telephone numbers from its network to the network of another telecommunications carrier, but does not comply with the performance criteria set forth in 52.3(a). Transitional number portability measures are technically feasible methods of providing number portability including Remote Call Forwarding (RCF), Direct Inward Dialing (DID), Route Indexing—Portability Hub (RI-PH), Directory Number Route Indexing (DNRI) and other comparable methods.

(v) The term *VRS provider* means an entity that provides VRS as defined by 47 CFR 64.601.

(w) The term *2009 LNP Porting Intervals Order* refers to In the Matters of Local Number Portability Porting Interval and Validation Requirements; Telephone Number Portability, WC Docket No. 07–244, CC Docket No. 95–116, Report and Order and Further Notice of Proposed Rulemaking, FCC 09–41 (2009).

[61 FR 38637, July 25, 1996. Redesignated at 61 FR 47353, Sept. 6, 1996, as amended at 61 FR 47355, Sept. 6, 1996; 63 FR 68203, Dec. 10, 1998; 67 FR 6435, Feb. 12, 2002; 68 FR 43009, July 21, 2003; 73 FR 9481, Feb. 21, 2008; 73 FR 41293, July 18, 2008; 74 FR 31638, July 2, 2009]

§ 52.23 Deployment of long-term database methods for number portability by LECs.

(a) Subject to paragraphs (b) and (c) of this section, all local exchange carriers (LECs) must provide number portability in compliance with the following performance criteria:

(1) Supports network services, features, and capabilities existing at the time number portability is implemented, including but not limited to emergency services, CLASS features, operator and directory assistance services, and intercept capabilities;

(2) Efficiently uses numbering resources;

(3) Does not require end users to change their telecommunications numbers;

(4) Does not result in unreasonable degradation in service quality or network reliability when implemented;

(5) Does not result in any degradation in service quality or network reliability when customers switch carriers;

(6) Does not result in a carrier having a proprietary interest;

(7) Is able to migrate to location and service portability; and

(8) Has no significant adverse impact outside the areas where number portability is deployed.

(b)(1) All LECs must provide a long-term database method for number portability in the 100 largest Metropolitan Statistical Areas (MSAs), as defined in § 52.21(k), in switches for which another carrier has made a specific request for the provision of number portability, subject to paragraph (b)(2) of this section.

(2) Any procedure to identify and request switches for deployment of number portability must comply with the following criteria:

(i) Any wireline carrier that is certified (or has applied for certification) to provide local exchange service in a state, or any licensed CMRS provider, must be permitted to make a request

for deployment of number portability in that state;

(ii) Carriers must submit requests for deployment at least nine months before the deployment deadline for the MSA;

(iii) A LEC must make available upon request to any interested parties a list of its switches for which number portability has been requested and a list of its switches for which number portability has not been requested; and

(iv) After the deadline for deployment of number portability in an MSA in the 100 largest MSAs, according to the deployment schedule set forth in the appendix to this part, a LEC must deploy number portability in that MSA in additional switches upon request within the following time frames:

(A) For remote switches supported by a host switch equipped for portability (''Equipped Remote Switches''), within 30 days;

(B) For switches that require software but not hardware changes to provide portability (''Hardware Capable Switches''), within 60 days;

(C) For switches that require hardware changes to provide portability (''Capable Switches Requiring Hardware''), within 180 days; and

(D) For switches not capable of portability that must be replaced (''Non-Capable Switches''), within 180 days.

(c) Beginning January 1, 1999, all LECs must make a long-term database method for number portability available within six months after a specific request by another telecommunications carrier in areas in which that telecommunications carrier is operating or plans to operate.

(d) The Chief, Common Carrier Bureau, may waive or stay any of the dates in the implementation schedule, as the Chief determines is necessary to ensure the efficient development of number portability, for a period not to exceed 9 months (*i.e.*, no later than September 30, 1999).

(e) In the event a LEC is unable to meet the Commission's deadlines for implementing a long-term database method for number portability, it may file with the Commission at least 60 days in advance of the deadline a petition to extend the time by which implementation in its network will be completed. A LEC seeking such relief must demonstrate through substantial, credible evidence the basis for its contention that it is unable to comply with the deployment schedule set forth in the appendix to this part 52. Such requests must set forth:

(1) The facts that demonstrate why the carrier is unable to meet the Commission's deployment schedule;

(2) A detailed explanation of the activities that the carrier has undertaken to meet the implementation schedule prior to requesting an extension of time;

(3) An identification of the particular switches for which the extension is requested;

(4) The time within which the carrier will complete deployment in the affected switches; and

(5) A proposed schedule with milestones for meeting the deployment date.

(f) The Chief, Wireline Competition Bureau, shall monitor the progress of local exchange carriers implementing number portability, and may direct such carriers to take any actions necessary to ensure compliance with the deployment schedule set forth in the appendix to this part 52.

(g) Carriers that are members of the Illinois Local Number Portability Workshop must conduct a field test of any technically feasible long-term database method for number portability in the Chicago, Illinois, area. The carriers participating in the test must jointly file with the Common Carrier Bureau a report of their findings within 30 days following completion of the test. The Chief, Common Carrier Bureau, shall monitor developments during the field test, and may adjust the field test completion deadline as necessary.

(h)(1) Porting from a wireline carrier to a wireless carrier is required where the requesting wireless carrier's ''coverage area,'' as defined in paragraph (h)(2) of this section, overlaps the geographic location in which the customer's wireline number is provisioned, provided that the porting-in carrier maintains the number's original rate center designation following the port.

(2) The wireless ''coverage area'' is defined as the area in which wireless

service can be received from the wireless carrier.

[61 FR 38637, July 25, 1996, as amended at 62 FR 18294, Apr. 15, 1997; 67 FR 13226, Mar. 21, 2002; 68 FR 43009, July 21, 2003; 73 FR 9481, Feb. 21, 2008]

§ 52.25 Database architecture and administration.

(a) The North American Numbering Council (NANC) shall direct establishment of a nationwide system of regional SMS databases for the provision of long-term database methods for number portability.

(b) All telecommunications carriers shall have equal and open access to the regional databases.

(c) The NANC shall select a local number portability administrator(s) (LNPA(s)) to administer the regional databases within seven months of the initial meeting of the NANC.

(d) The NANC shall determine whether one or multiple administrator(s) should be selected, whether the LNPA(s) can be the same entity selected to be the North American Numbering Plan Administrator, how the LNPA(s) should be selected, the specific duties of the LNPA(s), the geographic coverage of the regional databases, the technical interoperability and operational standards, the user interface between telecommunications carriers and the LNPA(s), the network interface between the SMS and the downstream databases, and the technical specifications for the regional databases.

(e) Once the NANC has selected the LNPA(s) and determined the locations of the regional databases, it must report its decisions to the Commission.

(f) The information contained in the regional databases shall be limited to the information necessary to route telephone calls to the appropriate telecommunications carriers. The NANC shall determine what specific information is necessary.

(g) Any state may opt out of its designated regional database and implement a state-specific database. A state must notify the Wireline Competition Bureau and NANC that it plans to implement a state-specific database within 60 days from the release date of the Public Notice issued by the Chief, Wireline Competition Bureau, identifying the administrator selected by the NANC and the proposed locations of the regional databases. Carriers may challenge a state's decision to opt out of the regional database system by filing a petition with the Commission.

(h) Individual state databases must meet the national requirements and operational standards recommended by the NANC and adopted by the Commission. In addition, such state databases must be technically compatible with the regional system of databases and must not interfere with the scheduled implementation of the regional databases.

(i) Individual carriers may download information necessary to provide number portability from the regional databases into their own downstream databases. Individual carriers may mix information needed to provide other services or functions with the information downloaded from the regional databases at their own downstream databases. Carriers may not withhold any information necessary to provide number portability from the regional databases on the grounds that such data has been combined with other information in its downstream database.

[61 FR 38637, July 25, 1996. Redesignated at 61 FR 47353, Sept. 6, 1996, as amended at 67 FR 13226, Mar. 21, 2002]

§ 52.26 NANC Recommendations on Local Number Portability Administration.

(a) Local number portability administration shall comply with the recommendations of the North American Numbering Council (NANC) as set forth in the report to the Commission prepared by the NANC's Local Number Portability Administration Selection Working Group, dated April 25, 1997 (*Working Group Report*) and its appendices, which are incorporated by reference pursuant to 5 U.S.C. 552(a) and 1 CFR part 51. *Except that:* Section 7.10 of *Appendix D and the following portions of Appendix E:* Section 7, Issue Statement I of Appendix A, and Appendix B in the *Working Group Report* are *not* incorporated herein.

(b) In addition to the requirements set forth in the *Working Group Report*,

the following requirements are established:

(1) If a telecommunictions carrier transmits a telephone call to a local exchange carrier's switch that contains any ported numbers, and the telecommunications carrier has failed to perform a database query to determine if the telephone number has been ported to another local exchange carrier, the local exchange carrier may block the unqueried call only if performing the database query is likely to impair network reliability;

(2) The regional limited liability companies (LLCs), already established by telecommunications carriers in each of the original Bell Operating Company regions, shall manage and oversee the local number portability administrators, subject to review by the NANC, but only on an interim basis, until the conclusion of a rulemaking to examine the issue of local number portability administrator oversight and management and the question of whether the LLCs should continue to act in this capacity; and

(3) The NANC shall provide ongoing oversight of number portability administration, including oversight of the regional LLCs, subject to Commission review. Parties shall attempt to resolve issues regarding number portability deployment among themselves and, if necessary, under the auspices of the NANC. If any party objects to the NANC's proposed resolution, the NANC shall issue a written report summarizing the positions of the parties and the basis for the recommendation adopted by the NANC. The NANC Chair shall submit its proposed resolution of the dispuited issue to the Chief of the Wireline Competition Bureau as a recommendation for Commission review. The Chief of the Wireline Competition Bureau will place the NANC's proposed resolution on public notice. Recommendations adopted by the NANC and forwarded to the Bureau may be implemented by the parties pending review of the recommendation. Within 90 days of the conclusion of the comment cycle, the Chief of the Wireline Competition Bureau may issue an order adopting, modifying, or rejecting the recommendation. If the Chief does not act within 90 days of the conclusion of the comment cycle, the recommendation will be deemed to have been adopted by the Bureau.

(c) The Director of the Federal Register approves this incorporation by reference in accordance with 5 U.S.C. 552(a) and 1 CFR part 51. Copies of the *Working Group Report* and its appendices can be obtained from the Commission's contract copier, Best Copy and Printing, Inc. (BCPI), Portals II, 445 12th Street, SW, Room CY–B402, Washington, DC 20554, (202) 488–5300, or via e-mail at *fcc@bcpiweb.com*, and can be inspected during normal business hours at the following locations: Reference Information Center, 445 12th Street, SW., Room CY—A257, Washington, DC 20554 or at the National Archives and Records Administration (NARA). For information on the availability of this material at NARA, call (202) 741–6030, or go to: *http://www.archives.gov/federal-register/cfr/ibr-locations.html*. The *Working Group Report* and its appendices are also available on the Internet at *http://www.fcc.gov/wcb/cpd/Nanc/lnpastuf.html*.

[62 FR 48786, Sept. 17, 1997, as amended at 65 FR 58466, Sept. 29, 2000; 67 FR 13226, Mar. 21, 2002; 69 FR 18803, Apr. 9, 2004; 74 FR 31638, July 2, 2009; 75 FR 35315, June 22, 2010]

§ 52.31 Deployment of long-term database methods for number portability by CMRS providers.

(a) By November 24, 2003, all covered CMRS providers must provide a long-term database method for number portability, including the ability to support roaming, in the 100 largest MSAs, as defined in § 52.21(k), in compliance with the performance criteria set forth in section 52.23(a) of this part, in switches for which another carrier has made a specific request for the provision of number portability, subject to paragraph (a)(1) of this section. A licensee may have more than one CMRS system, but only the systems that satisfy the definition of covered CMRS are required to provide number portability.

(1) Any procedure to identify and request switches for development of number portability must comply with the following criteria:

(i) Any wireline carrier that is certified (or has applied for certification) to provide local exchange service in a

state, or any licensed CMRS provider, must be permitted to make a request for deployment of number portability in that state;

(ii) Carries requesting deployment in the 100 largest MSAs by November 24, 2003 must submit requests by February 24, 2003.

(iii) A covered CMRS provider must make available upon request to any interested parties a list of its switches for which number portability has been requested and a list of its switches for which number portability has not been requested;

(iv) After November 24, 2003, a covered CMRS provider must deploy number portability in additional switches serving the 100 largest MSAs upon request within the following time frames:

(A) For remote switches supported by a host switch equipped for portability (''Equipped Remote Switches''), within 30 days;

(B) For switches that require software but not hardware changes to provide portability (''Hardware Capable Switches''), within 60 days;

(C) For switches that require hardware changes to provide portability (''Capable Switches Requiring Hardware''), within 180 days; and

(D) For switches not capable of portability that must be replaced (''Non-Capable Switches''), within 180 days.

(v) Carriers must be able to request deployment in any wireless switch that serves any area within the MSA, even if the wireless switch is outside that MSA, or outside any of the MSAs identified in the Appendix to this part.

(2) By November 24, 2002, all covered CMRS providers must be able to support roaming nationwide.

(b) By December 31, 1998, all covered CMRS providers must have the capability to obtain routing information, either by querying the appropriate database themselves or by making arrangements with other carriers that are capable of performing database queries, so that they can deliver calls from their networks to any party that has retained its number after switching from one telecommunications carrier to another.

(c) [Reserved]

(d) In the event a carrier subject to paragraphs (a) and (b) of this section is unable to meet the Commission's deadlines for implementing a long-term number portability method, it may file with the Commission at least 60 days in advance of the deadline a petition to extend the time by which implementation in its network will be completed. A carrier seeking such relief must demonstrate through substantial, credible evidence the basis for its contention that it is unable to comply with paragraphs (a) and (b) of this section. Such requests must set forth:

(1) The facts that demonstrate why the carrier is unable to meet our deployment schedule;

(2) A detailed explanation of the activities that the carrier has undertaken to meet the implementation schedule prior to requesting an extension of time;

(3) An identification of the particular switches for which the extension is requested;

(4) The time within which the carrier will complete deployment in the affected switches; and

(5) A proposed schedule with milestones for meeting the deployment date.

(e) The Chief, Wireless Telecommunications Bureau, may establish reporting requirements in order to monitor the progress of covered CMRS providers implementing number portability, and may direct such carriers to take any actions necessary to ensure compliance with this deployment schedule.

[61 FR 38637, July 25, 1996, as amended at 62 FR 18295, Apr. 15, 1997; 63 FR 68204, Dec. 10, 1998; 64 FR 22563, Apr. 27, 1999; 68 FR 43009, July 21, 2003; 71 FR 65750, Nov. 9, 2006]

§ 52.32 Allocation of the shared costs of long-term number portability.

(a) The local number portability administrator, as defined in § 52.21(h), of each regional database, as defined in § 52.21(1), shall recover the shared costs of long-term number portability attributable to that regional database from all telecommunications carriers providing telecommunications service in areas that regional database serves. Pursuant to its duties under § 52.26, the local number portability administrator shall collect sufficient revenues to fund

the operation of the regional database by:

(1) Assessing a $100 yearly contribution on each telecommunications carrier identified in paragraph (a) introductory text that has no intrastate, interstate, or international end-user telecommunications revenue derived from providing telecommunications service in the areas that regional database serves, and

(2) Assessing on each of the other telecommunications carriers providing telecommunications service in areas that regional database serves, a charge that recovers the remaining shared costs of long-term number portability attributable to that regional database in proportion to the ratio of:

(i) The sum of the intrastate, interstate, and international end-user telecommunications revenues that such telecommunications carrier derives from providing telecommunications service in the areas that regional database serves, ii) to the sum of the intrastate, interstate, and international end-user telecommunications revenues that all telecommunications carriers derive from providing telecommunications service in the areas that regional database serves.

(b) All telecommunications carriers providing service in the United States shall complete and submit a ''Telecommunications Reporting Worksheet'' (as published by the Commission in the FEDERAL REGISTER), which sets forth the information needed to calculate contributions referred to in paragraph (a) of this section. The worksheet shall be certified to by an officer of the contributor, and subject to verification by the Commission or the administrator at the discretion of the Commission. The Chief of the Wireline Competition Bureau may waive, reduce, modify, or eliminate contributor reporting requirements that prove unnecessary and require additional reporting requirements that the Bureau deems necessary to the sound and efficient administration of long-term number portability.

(c) Local number portability administrators shall keep all data obtained from contributors confidential and shall not disclose such data in company-specific form unless directed to do so by the Commission. Subject to any restrictions imposed by the Chief of the Wireline Competition Bureau, the local number portability administrators may share data obtained from carriers with the administrators of the universal service support mechanism (See 47 CFR 54.701 of this chapter), the TRS Fund (See 47 CFR 64.604(c)(4)(iii)(H) of this chapter), and the North American Numbering Plan cost recovery (See 47 CFR 52.16). The local number portability administrators shall keep confidential all data obtained from other administrators. The administrators shall use such data, from carriers or administrators, only for purposes of administering local number portability. The Commission shall have access to all data reported to the Administrator. Contributors may make requests for Commission nondisclosure of company-specific revenue information under § 0.459 of this chapter by so indicating on the Telecommunications Reporting Worksheet at the time that the subject data are submitted. The Commission shall make all decisions regarding nondisclosure of company-specific information.

(d) Once a telecommunications carrier has been allocated, pursuant to paragraph (a)(1) or (a)(2) of this section, its portion of the shared costs of long-term number portability attributable to a regional database, the carrier shall treat that portion as a carrier-specific cost directly related to providing number portability.

(e) For the purposes of this section, the term ''telecommunications carrier'' shall include interconnected VoIP providers as that term is defined in § 52.21(h); and ''telecommunications service'' shall include ''interconnected VoIP service'' as that term is defined in 47 CFR 9.3.

[63 FR 35160, June 29, 1998, as amended at 64 FR 41331, July 30, 1999; 67 FR 13226, Mar. 21, 2002; 73 FR 9481, Feb. 21, 2008]

§ 52.33 Recovery of carrier-specific costs directly related to providing long-term number portability.

(a) Incumbent local exchange carriers may recover their carrier-specific costs directly related to providing long-term number portability by establishing in tariffs filed with the Federal

Communications Commission a monthly number-portability charge, as specified in paragraph (a)(1) of this section, a number portability query-service charge, as specified in paragraph (a)(2) of this section, and a monthly number-portability query/administration charge, as specified in paragraph (a)(3) of this section.

(1) The monthly number-portability charge may take effect no earlier than February 1, 1999, on a date the incumbent local exchange carrier selects, and may end no later than 5 five years after the incumbent local exchange carrier's monthly number-portability charge takes effect.

(i) An incumbent local exchange carrier may assess each end user it serves in the 100 largest metropolitan statistical areas, and each end user it serves from a number-portability-capable switch outside the 100 largest metropolitan statistical areas, one monthly number-portability charge per line except that:

(A) One PBX trunk shall receive nine monthly number-portability charges.

(B) One PRI ISDN line shall receive five monthly number-portability charges.

(C) Lifeline Assistance Program customers shall not receive the monthly number-portability charge.

(ii) An incumbent local exchange carrier may assess on carriers that purchase the incumbent local exchange carrier's switching ports as unbundled network elements under section 251 of the Communications Act, and/or Feature Group A access lines, and resellers of the incumbent local exchange carrier's local service, the same charges as described in paragraph (a)(1)(i) of this section, as if the incumbent local exchange carrier were serving those carriers' end users.

(iii) An incumbent local exchange carrier may not assess a monthly number-portability charge for local loops carriers purchase as unbundled network elements under section 251.

(iv) The incumbent local exchange carrier shall levelize the monthly number-portability charge over five years by setting a rate for the charge at which the present value of the revenue recovered by the charge does not exceed the present value of the cost being recovered, using a discount rate equal to the rate of return on investment which the Commission has prescribed for interstate access services pursuant to Part 65 of the Commission's Rules.

(2) The number portability query-service charge may recover only carrier-specific costs directly related to providing long-term number portability that the incumbent local exchange carrier incurs to provide long-term number portability query service to carriers on a prearranged and default basis.

(3) An incumbent local exchange carrier serving an area outside the 100 largest metropolitan statistical areas that is not number-portability capable but that participates in an extended area service calling plan with any one of the 100 largest metropolitan statistical areas or with an adjacent number portability-capable local exchange carrier may assess each end user it serves one monthly number-portability query/administration charge per line to recover the costs of queries, as specified in paragraph (a)(2) of this section, and carrier-specific costs directly related to the carrier's allocated share of the regional local number portability administrator's costs, except that per-line monthly number-portability query/administration charges shall be assigned as specified in paragraph (a)(1) of this section with respect to monthly number-portability charges.

(i) Such incumbent local exchange carriers may assess a separate monthly number-portability charge as specified in paragraph (a)(1) of this section but such charge may recover only the costs incurred to implement number portability functionality and shall not include costs recovered through the monthly number-portability query/administration charge.

(ii) The monthly number-portability query/administration charge may end no later than five years after the incumbent local exchange carrier's monthly number-portability query/administration charge takes effect. The monthly number-portability query/administration charge may be collected over a different five-year period than the monthly number-portability charge. These five-year periods may

run either consecutively or concurrently, in whole or in part.

(b) All interconnected VoIP providers and telecommunications carriers other than incumbent local exchange carriers may recover their number portability costs in any manner consistent with applicable state and federal laws and regulations.

[63 FR 35161, June 29, 1998, as amended at 67 FR 40620, June 13, 2002; 73 FR 9481, Feb. 21, 2008]

§ 52.34 Obligations regarding local number porting to and from interconnected VoIP or Internet-based TRS providers.

(a) An interconnected VoIP or VRS or IP Relay provider must facilitate an end-user customer's or a Registered Internet-based TRS User's valid number portability request, as it is defined in this subpart, either to or from a telecommunications carrier or an interconnected VoIP or VRS or IP Relay provider. ''Facilitate'' is defined as the interconnected VoIP or VRS or IP Relay provider's affirmative legal obligation to take all steps necessary to initiate or allow a port-in or port-out itself or through the telecommunications carriers, if any, that it relies on to obtain numbering resources, subject to a valid port request, without unreasonable delay or unreasonable procedures that have the effect of delaying or denying porting of the NANP-based telephone number.

(b) An interconnected VoIP or VRS or IP Relay provider may not enter into any agreement that would prohibit an end-user customer or a Registered Internet-based TRS User from porting between interconnected VoIP or VRS or IP Relay providers, or to or from a telecommunications carrier.

[73 FR 9481, Feb, 21, 2008, as amended at 73 FR 41294, July 18, 2008]

§ 52.35 Porting Intervals.

(a) All telecommunications carriers required by the Commission to port telephone numbers must complete a simple wireline-to-wireline or simple intermodal port request within one business day unless a longer period is requested by the new provider or by the customer. The traditional work week of Monday through Friday represents mandatory business days and 8 a.m. to 5 p.m. represents minimum business hours, excluding the current service provider's company-defined holidays. An accurate and complete Local Service Request (LSR) must be received by the current service provider between 8 a.m. and 1 p.m. local time for a simple port request to be eligible for activation at midnight on the same day. Any simple port LSRs received after this time will be considered received on the following business day at 8 a.m. local time.

(b) Small providers, as described in the *2009 LNP Porting Interval Order*, must comply with this section by February 2, 2011.

(c) Unless directed otherwise by the Commission, any telecommunications carrier granted a waiver by the Commission of the one-business day porting interval described in paragraph (a) must complete a simple wireline-to-wireline or simple intermodal port request within four business days unless a longer period is requested by the new provider or by the customer.

(d) All telecommunications carriers required by the Commission to port telephone numbers must complete a non-simple wireline-to-wireline or non-simple intermodal port request within four business days unless a longer period is requested by the new provider or by the customer.

(e) For purposes of this section:

(1) The term ''telecommunications carrier'' includes an interconnected Voice over Internet Protocol (VoIP) provider as that term in defined in § 52.21(h);

(2) The term ''local time'' means the predominant time zone of the Number Portability Administration Center (NPAC) Region in which the telephone number is being ported; and

(3) The term ''intermodal ports'' includes

(i) Wireline-to-wireless ports;

(ii) Wireless-to-wireline ports; and

(iii) Ports involving interconnected VoIP service.

[75 FR 35315, June 22, 2010]

§ 52.36 Standard data fields for simple port order processing.

(a) A telecommunications carrier may require only the data described in

paragraphs (b) and (c) of this section to accomplish a simple port order request from an end user customer's new telecommunication's carrier.

(b) *Required standard data fields.*

(1) Ported telephone number;

(2) Account number;

(3) Zip code;

(4) Company code;

(5) New network service provider;

(6) Desired due date;

(7) Purchase order number;

(8) Version;

(9) Number portability direction indicator;

(10) Customer carrier name abbreviation;

(11) Requisition type and status;

(12) Activity;

(13) Telephone number of initiator; and

(14) Agency authority status.

(c) *Optional standard data field.* The Passcode field shall be optional unless the passcode has been requested and assigned by the end user.

(d) For purposes of this section, the term ''telecommunications carrier'' includes an interconnected VoIP provider as that term is defined in § 52.21(h).

[75 FR 35315, June 22, 2010]

§§ 52.37–52.99 [Reserved]

Subpart D—Toll Free Numbers

SOURCE: 62 FR 20127, Apr. 25, 1997, unless otherwise noted.

§ 52.101 General definitions.

As used in this part:

(a) *Number Administration and Service Center (''NASC'').* The entity that provides user support for the Service Management System database and administers the Service Management System database on a day-to-day basis.

(b) *Responsible Organization (''RespOrg'').* The entity chosen by a toll free subscriber to manage and administer the appropriate records in the toll free Service Management System for the toll free subscriber.

(c) *Service Control Points.* The regional databases in the toll free network.

(d) *Service Management System Database (''SMS Database'').* The administrative database system for toll free numbers. The Service Management System is a computer system that enables Responsible Organizations to enter and amend the data about toll free numbers within their control. The Service Management System shares this information with the Service Control Points. The entire system is the SMS database.

(e) *Toll Free Subscriber.* The entity that requests a Responsible Organization to reserve a toll free number from the SMS database.

(f) *Toll Free Number.* A telephone number for which the toll charges for completed calls are paid by the toll free subscriber. The toll free subscriber's specific geographic location has no bearing on what toll free number it can obtain from the SMS database.

§ 52.103 Lag times.

(a) *Definitions.* As used in this section, the following definitions apply:

(1) *Assigned Status.* A toll free number record that has specific subscriber routing information entered by the Responsible Organization in the Service Management System database and is pending activation in the Service Control Points.

(2) *Disconnect Status.* The toll free number has been discontinued and an exchange carrier intercept recording is being provided.

(3) *Lag Time.* The interval between a toll free number's reservation in the Service Management System database and its conversion to working status, as well as the period of time between disconnection or cancellation of a toll free number and the point at which that toll free number may be reassigned to another toll free subscriber.

(4) *Reserved Status.* The toll free number has been reserved from the Service Management System database by a Responsible Organization for a toll free subscriber.

(5) *Seasonal Numbers.* Toll free numbers held by toll free subscribers who do not have a year-round need for a toll free number.

(6) *Spare Status.* The toll free number is available for assignment by a Responsible Organization.

(7) *Suspend Status.* The toll free service has been temporarily disconnected and is scheduled to be reactivated.

(8) *Unavailable Status.* The toll free number is not available for assignment due to an unusual condition.

(9) *Working Status.* The toll free number is loaded in the Service Control Points and is being utilized to complete toll free service calls.

(b) *Reserved Status.* Toll free numbers may remain in reserved status for up to 45 days. There shall be no extension of the reservation period after expiration of the initial 45-day interval.

(c) *Assigned Status.* Toll free numbers may remain in assigned status until changed to working status or for a maximum of 6 months, whichever occurs first. Toll free numbers that, because of special circumstances, require that they be designated for a particular subscriber far in advance of their actual usage shall not be placed in assigned status, but instead shall be placed in unavailable status.

(d) *Disconnect Status.* Toll free numbers may remain in disconnect status for up to 4 months. No requests for extension of the 4-month disconnect interval shall be granted. All toll free numbers in disconnect status must go directly into the spare category upon expiration of the 4-month disconnect interval. Responsible Organizations shall not retrieve a toll free number from disconnect status and return that number directly to working status at the expiration of the 4-month disconnect interval.

(e) *Suspend Status.* Toll free numbers may remain in suspend status until changed to working status or for a maximum of 8 months, whichever occurs first. Only numbers involved in billing disputes shall be eligible for suspend status.

(f) *Unavailable Status.* (1) Written requests to make a specific toll free number unavailable must be submitted to DSMI by the Responsible Organization managing the records of the toll free number. The request shall include the appropriate documentation of the reason for the request. DSMI is the only entity that can assign this status to or remove this status from a number. Responsible Organizations that have a toll free subscriber with special circumstances requiring that a toll free number be designated for that particular subscriber far in advance of its actual usage may request that DSMI place such a number in unavailable status.

(2) Seasonal numbers shall be placed in unavailable status. The Responsible Organization for a toll free subscriber who does not have a year round need for a toll free number shall follow the procedures outlined in § 52.103(f)(1) of these rules if it wants DSMI to place a particular toll free number in unavailable status.

§ 52.105 Warehousing.

(a) As used in this section, warehousing is the practice whereby Responsible Organizations, either directly or indirectly through an affiliate, reserve toll free numbers from the Service Management System database without having an actual toll free subscriber for whom those numbers are being reserved.

(b) Responsible Organizations shall not warehouse toll free numbers. There shall be a rebuttable presumption that a Responsible Organization is warehousing toll free numbers if:

(1) The Responsible Organization does not have an identified toll free subscriber agreeing to be billed for service associated with each toll free number reserved from the Service Management System database; or

(2) The Responsible Organization does not have an identified toll free subscriber agreeing to be billed for service associated with a toll free number before switching that toll free number from reserved or assigned to working status.

(c) Responsible Organizations shall not maintain a toll free number in reserved status if there is not a prospective toll free subscriber requesting that toll free number.

(d) A Responsible Organization's act of reserving a number from the Service Management System database shall serve as that Responsible Organization's certification that there is an identified toll free subscriber agreeing to be billed for service associated with the toll free number.

(e) *Tariff Provision.* The following provision shall be included in the Service Management System tariff and in the local exchange carriers' toll free database access tariffs:

[T]he Federal Communications Commission (''FCC'') has concluded that warehousing, which the FCC defines as Responsible Organizations, either directly or indirectly through an affiliate, reserving toll free numbers from the SMS database without having an identified toll free subscriber from whom those numbers are being reserved, is an unreasonable practice under § 201(b) of the Communications Act and is inconsistent with the Commission's obligation under § 251(e) of the Communications Act to ensure that numbers are made available on an equitable basis; and if a Responsible Organization does not have an identified toll free subscriber agreeing to be billed for service associated with each toll free number reserved from the database, or if a Responsible Organization does not have an identified, billed toll free subscriber before switching a number from reserved or assigned to working status, then there is a rebuttable presumption that the Responsible Organization is warehousing numbers. Responsible Organizations that warehouse numbers will be subject to penalties.

§ 52.107 Hoarding.

(a) As used in this section, hoarding is the acquisition by a toll free subscriber from a Responsible Organization of more toll free numbers than the toll free subscriber intends to use for the provision of toll free service. The definition of hoarding also includes number brokering, which is the selling of a toll free number by a private entity for a fee.

(1) Toll free subscribers shall not hoard toll free numbers.

(2) No person or entity shall acquire a toll free number for the purpose of selling the toll free number to another entity or to a person for a fee.

(3) Routing multiple toll free numbers to a single toll free subscriber will create a rebuttable presumption that the toll free subscriber is hoarding or brokering toll free numbers.

(b) *Tariff Provision.* The following provision shall be included in the Service Management System tariff and in the local exchange carriers' toll free database access tariffs:

[T]he Federal Communications Commission (''FCC'') has concluded that hoarding, defined as the acquisition of more toll free numbers than one intends to use for the provision of toll free service, as well as the sale of a toll free number by a private entity for a fee, is contrary to the public interest in the conservation of the scarce toll free number resource and contrary to the FCC's responsibility to promote the orderly use and allocation of toll free numbers.

§ 52.109 Permanent cap on number reservations.

(a) A Responsible Organization may have in reserve status, at any one time, either 2000 toll free numbers or 7.5 percent of that Responsible Organization's numbers in working status, whichever is greater.

(b) A Responsible Organization shall never reserve more than 3 percent of the quantity of toll free numbers in spare status as of the previous Sunday at 12:01 a.m. Eastern Time.

(c) The Wireline Competition Bureau shall modify the quantity of numbers a Responsible Organization may have in reserve status or the percentage of numbers in the spare poll that a Responsible Organization may reserve when exigent circumstances make such action necessary. The Wireline Competition Bureau shall establish, modify, and monitor toll free number conservation plans when exigent circumstances necessitate such action.

[62 FR 20127, Apr. 25, 1997, as amended at 67 FR 13226, Mar. 21, 2002]

§ 52.111 Toll free number assignment.

Toll free numbers shall be made available on a first-come, first-served basis unless otherwise directed by the Commission.

[63 FR 16441, Apr. 3, 1998]

APPENDIX TO PART 52—DEPLOYMENT SCHEDULE FOR LONG-TERM DATABASE METHODS FOR LOCAL NUMBER PORTABILITY

Implementation must be completed by the carriers in the relevant MSAs during the periods specified below:

Phase I—10/1/97–3/31/98	
Chicago, IL	3
Philadelphia, PA	4
Atlanta, GA	8
New York, NY	2
Los Angeles, CA	1
Houston, TX	7
Minneapolis, MN	12
Phase II—1/1/98–5/15/98	
Detroit, MI	6
Cleveland, OH	20
Washington, DC	5

Baltimore, MD	18
Miami, FL	24
Fort Lauderdale, FL	39
Orlando, FL	40
Cincinnati, OH	30
Tampa, FL	23
Boston, MA	9
Riverside, CA	10
San Diego, CA	14
Dallas, TX	11
St. Louis, MO	16
Phoenix, AZ	17
Seattle, WA	22
Phase III—4/1/98–6/30/98	
Indianapolis, IN	34
Milwaukee, WI	35
Columbus, OH	38
Pittsburgh, PA	19
Newark, NJ	25
Norfolk, VA	32
New Orleans, LA	41
Charlotte, NC	43
Greensboro, NC	48
Nashville, TN	51
Las Vegas, NV	50
Nassau, NY	13
Buffalo, NY	44
Orange Co, CA	15
Oakland, CA	21
San Francisco, CA	29
Rochester, NY	49
Kansas City, KS	28
Fort Worth, TX	33
Hartford, CT	46
Denver, CO	26
Portland, OR	27
Phase IV—7/1/98–9/30/98	
Grand Rapids, MI	56
Dayton, OH	61
Akron, OH	73
Gary, IN	80
Bergen, NJ	42
Middlesex, NJ	52
Monmouth, NJ	54
Richmond, VA	63
Memphis, TN	53
Louisville, KY	57
Jacksonville, FL	58
Raleigh, NC	59
West Palm Beach, FL	62
Greenville, SC	66
Honolulu, HI	65
Providence, RI	47
Albany, NY	64
San Jose, CA	31
Sacramento, CA	36
Fresno, CA	68
San Antonio, TX	37
Oklahoma City, OK	55
Austin, TX	60
Salt Lake City, UT	45
Tucson, AZ	71
Phase V—10/1/98–12/31/98	
Toledo, OH	81
Youngstown, OH	85
Ann Arbor, MI	95
Fort Wayne, IN	100
Scranton, PA	78
Allentown, PA	82
Harrisburg, PA	83
Jersey City, NJ	88
Wilmington, DE	89
Birmingham, AL	67
Knoxville, KY	79
Baton Rouge, LA	87
Charleston, SC	92
Sarasota, FL	93
Mobile, AL	96
Columbia, SC	98
Tulsa, OK	70
Syracuse, NY	69
Springfield, MA	86
Ventura, CA	72
Bakersfield, CA	84
Stockton, CA	94
Vallejo, CA	99
El Paso, TX	74
Little Rock, AR	90
Wichita, KS	97
New Haven, CT	91
Omaha, NE	75
Albuquerque, NM	76
Tacoma, WA	77

[62 FR 18295, Apr. 15, 1997]

PART 53—SPECIAL PROVISIONS CONCERNING BELL OPERATING COMPANIES

Subpart A—General Information

Sec.
53.1 Basis and purpose.
53.3 Terms and definitions.

Subpart B—Bell Operating Company Entry Into InterLATA Services [Reserved]

Subpart C—Separate Affiliate; Safeguards

53.201 Services for which a section 272 affiliate is required.
53.203 Structural and transactional requirements.
53.205 Fulfillment of certain requests. [Reserved]
53.207 Successor or assign.
53.209 Biennial audit.
53.211 Audit planning.

53.213 Audit analysis and evaluation.

Subpart D—Manufacturing by Bell Operating Companies

53.301 [Reserved]

Subpart E—Electronic Publishing by Bell Operating Companies

53.401 [Reserved]

Subpart F—Alarm Monitoring Services

53.501 [Reserved]

AUTHORITY: Sections 1–5, 7, 201–05, 218, 251, 253, 271–75, 48 Stat. 1070, as amended, 1077; 47 U.S.C. 151–55, 157, 201–05, 218, 251, 253, 271–75, unless otherwise noted.

SOURCE: 62 FR 2967, Jan. 21, 1997, unless otherwise noted.

Subpart A—General Information

§ 53.1 Basis and purpose.

(a) *Basis*. The rules in this part are issued pursuant to the Communications Act of 1934, as amended.

(b) *Purpose*. The purpose of the rules in this part is to implement sections 271 and 272 of the Communications Act of 1934, as amended, 47 U.S.C. 271 and 272.

§ 53.3 Terms and definitions.

Terms used in this part have the following meanings:

Act. The Act means the Communications Act of 1934, as amended.

Affiliate. An affiliate is a person that (directly or indirectly) owns or controls, is owned or controlled by, or is under common ownership or control with, another person. For purposes of this part, the term ''own'' means to own an equity interest (or the equivalent thereof) of more than 10 percent.

AT&T Consent Decree. The AT&T Consent Decree is the order entered August 24, 1982, in the antitrust action styled *United States* v. *Western Electric*, Civil Action No. 82–0192, in the United States District Court for the District of Columbia, and any judgment or order with respect to such action entered on or after August 24, 1982.

Bell Operating Company (BOC). The term *Bell operating company*

(1) Means any of the following companies: Bell Telephone Company of Nevada, Illinois Bell Telephone Company, Indiana Bell Telephone Company, Incorporated, Michigan Bell Telephone Company, New England Telephone and Telegraph Company, New Jersey Bell Telephone Company, New York Telephone Company, U S West Communications Company, South Central Bell Telephone Company, Southern Bell Telephone and Telegraph Company, Southwestern Bell Telephone Company, The Bell Telephone Company of Pennsylvania, The Chesapeake and Potomac Telephone Company, The Chesapeake and Potomac Telephone Company of Maryland, The Chesapeake and Potomac Telephone Company of Virginia, The Chesapeake and Potomac Telephone Company of West Virginia, The Diamond State Telephone Company, The Ohio Bell Telephone Company, The Pacific Telephone and Telegraph Company, or Wisconsin Telephone Company; and

(2) Includes any successor or assign of any such company that provides wireline telephone exchange service; but

(3) Does not include an affiliate of any such company, other than an affiliate described in paragraphs (1) or (2) of this definition.

In-Region InterLATA service. *In-region interLATA service is interLATA service* that originates in any of a BOC's in-region states, which are the states in which the BOC or any of its affiliates was authorized to provide wireline telephone exchange service pursuant to the reorganization plan approved under the AT&T Consent Decree, as in effect on February 7, 1996. For the purposes of this part, 800 service, private line service, or equivalent services that terminate in a BOC's in-region state and allow the called party to determine the interLATA carrier are considered to be in-region interLATA service.

InterLATA Information Service. An *interLATA information service* is an information service that incorporates as a necessary, bundled element an interLATA telecommunications transmission component, provided to the customer for a single charge.

InterLATA Service. An *interLATA service* is a service that involves telecommunications between a point located in a LATA and a point located outside such area. The term

''interLATA service'' includes both interLATA telecommunications services and interLATA information services.

Local Access and Transport Area (LATA). A *LATA* is a contiguous geographic area:

(1) Established before February 8, 1996 by a BOC such that no exchange area includes points within more than one metropolitan statistical area, consolidated metropolitan statistical area, or state, except as expressly permitted under the AT&T Consent Decree; or

(2) Established or modified by a BOC after February 8, 1996 and approved by the Commission.

Local Exchange Carrier (LEC). A *LEC* is any person that is engaged in the provision of telephone exchange service or exchange access. Such term does not include a person insofar as such person is engaged in the provision of commercial mobile service under section 332(c) of the Act, except to the extent that the Commission finds that such service should be included in the definition of such term.

Out-of-Region InterLATA service. Out-of-region interLATA service is interLATA service that originates outside a BOC's in-region states.

Section 272 affiliate. A *section 272 affiliate* is a BOC affiliate that complies with the separate affiliate requirements of section 272(b) of the Act and the regulations contained in this part.

Subpart B—Bell Operating Company Entry Into InterLATA Services [Reserved]

Subpart C—Separate Affiliate; Safeguards

§ 53.201 Services for which a section 272 affiliate is required.

For the purposes of applying section 272(a)(2) of the Act:

(a) *Previously authorized activities.* When providing previously authorized activities described in section 271(f) of the Act, a BOC shall comply with the following:

(1) A BOC shall provide previously authorized interLATA information services and manufacturing activities through a section 272 affiliate no later than February 8, 1997.

(2) A BOC shall provide previously authorized interLATA telecommunications services in accordance with the terms and conditions of the orders entered by the United States District Court for the District of Columbia pursuant to section VII or VIII(C) of the AT&T Consent Decree that authorized such services.

(b) *InterLATA information services.* A BOC shall provide an interLATA information service through a section 272 affiliate when it provides the interLATA telecommunications transmission component of the service either over its own facilities, or by reselling the interLATA telecommunications services of an interexchange provider.

(c) *Out-of-region interLATA information services.* A BOC shall provide out-of-region interLATA information services through a section 272 affiliate.

§ 53.203 Structural and transactional requirements.

(a) *Operational independence.* A section 272 affiliate and the BOC of which it is an affiliate shall not jointly own transmission and switching facilities or the land and buildings where those facilities are located.

(b) *Separate books, records, and accounts.* A section 272 affiliate shall maintain books, records, and accounts, which shall be separate from the books, records, and accounts maintained by the BOC of which it is an affiliate.

(c) *Separate officers, directors, and employees.* A section 272 affiliate shall have separate officers, directors, and employees from the BOC of which it is an affiliate.

(d) *Credit arrangements.* A section 272 affiliate shall not obtain credit under any arrangement that would permit a creditor, upon default, to have recourse to the assets of the BOC of which it is an affiliate.

(e) *Arm's-length transactions.* A section 272 affiliate shall conduct all transactions with the BOC of which it is an affiliate on an arm's length basis, pursuant to the accounting rules described in § 32.27 of this chapter, with

any such transactions reduced to writing and available for public inspection.

[62 FR 2967, Jan. 21, 1997, as amended at 69 FR 16496, Mar. 30, 2004; 70 FR 55302, Sept. 21, 2005]

§ 53.205 Fulfillment of certain requests. [Reserved]

§ 53.207 Successor or assign.

If a BOC transfers to an affiliated entity ownership of any network elements that must be provided on an unbundled basis pursuant to section 251(c)(3) of the Act, such entity will be deemed to be an ''assign'' of the BOC under section 3(4) of the Act with respect to such transferred network elements. A BOC affiliate shall not be deemed a ''successor or assign'' of a BOC solely because it obtains network elements from the BOC pursuant to section 251(c)(3) of the Act.

[62 FR 2967, Jan. 21, 1997; 63 FR 34604, June 25, 1998]

§ 53.209 Biennial audit.

(a) A Bell operating company required to operate a separate affiliate under section 272 of the Act shall obtain and pay for a Federal/State joint audit every two years conducted by an independent auditor to determine whether the Bell operating company has complied with the rules promulgated under section 272 and particularly the audit requirements listed in paragraph (b) of this section.

(b) The independent audit shall determine:

(1) Whether the separate affiliate required under section 272 of the Act has:

(i) Operated independently of the Bell operating company;

(ii) Maintained books, records, and accounts in the manner prescribed by the Commission that are separate from the books, records and accounts maintained by the Bell operating company;

(iii) Officers, directors and employees that are separate from those of the Bell operating company;

(iv) Not obtained credit under any arrangement that would permit a creditor, upon default, to have recourse to the assets of the Bell operating company; and

(v) Conducted all transactions with the Bell operating company on an arm's length basis with the transactions reduced to writing and available for public inspection.

(2) Whether or not the Bell operating company has:

(i) Discriminated between the separate affiliate and any other entity in the provision or procurement of goods, services, facilities, and information, or the establishment of standards;

(ii) Accounted for all transactions with the separate affiliate in accordance with the accounting principles and rules approved by the Commission.

(3) Whether or not the Bell operating company and an affiliate subject to section 251(c) of the Act:

(i) Have fulfilled requests from unaffiliated entities for telephone exchange service and exchange access within a period no longer than the period in which it provides such telephone exchange service and exchange access to itself or its affiliates;

(ii) Have made available facilities, services, or information concerning its provision of exchange access to other providers of interLATA services on the same terms and conditions as it has to its affiliate required under section 272 that operates in the same market;

(iii) Have charged its separate affiliate under section 272, or imputed to itself (if using the access for its provision of its own services), an amount for access to its telephone exchange service and exchange access that is no less than the amount charged to any unaffiliated interexchange carriers for such service; and

(iv) Have provided any interLATA or intraLATA facilities or services to its interLATA affiliate and made available such services or facilities to all carriers at the same rates and on the same terms and conditions, and allocated the associated costs appropriately.

(c) An independent audit shall be performed on the first full year of operations of the separate affiliate required under section 272 of the Act, and biennially thereafter.

(d) The Chief, Enforcement Bureau, shall work with the regulatory agencies in the states having jurisdiction over the Bell operating company's local telephone services, to attempt to form a Federal/State joint audit team with the responsibility for overseeing

the planning of the audit as specified in § 53.211 and the analysis and evaluation of the audit as specified in § 53.213. The Federal/State joint audit team may direct the independent auditor to take any actions necessary to ensure compliance with the audit requirements listed in paragraph (b) of this section. If the state regulatory agencies having jurisdiction choose not to participate in the Federal/State joint audit team, the Chief, Enforcement Bureau, shall establish an FCC audit team to oversee and direct the independent auditor to take any actions necessary to ensure compliance with the audit requirements in paragraph (b) of this section.

[62 FR 2926, Jan. 21, 1997, as amended at 67 FR 13226, Mar. 21, 2002]

§ 53.211 Audit planning.

(a) Before selecting an independent auditor, the Bell operating company shall submit preliminary audit requirements, including the proposed scope of the audit and the extent of compliance and substantive testing, to the Federal/State joint audit team organized pursuant to § 53.209(d);

(b) The Federal/State joint audit team shall review the preliminary audit requirements to determine whether it is adequate to meet the audit requirements in § 53.209 (b). The Federal/State joint audit shall have 30 days to review the audit requirements and determine any modifications that shall be incorporated into the final audit requirements.

(c) After the audit requirements have been approved by the Federal/State joint audit team, the Bell operating company shall engage within 30 days an independent auditor to conduct the biennial audit. In making its selection, the Bell operating company shall not engage any independent auditor who has been instrumental during the past two years in designing any of the accounting or reporting systems under review in the biennial audit.

(d) The independent auditor selected by the Bell operating company to conduct the audit shall develop a detailed audit program based on the final audit requirements and submit it to the Federal/State joint audit team. The Federal/State joint audit team shall have 30 days to review the audit program and determine any modifications that shall be incorporated into the final audit program.

(e) During the course of the biennial audit, the independent auditor, among other things, shall:

(1) Inform the Federal/State joint audit team of any revisions to the final audit program or to the scope of the audit.

(2) Notify the Federal/State joint audit team of any meetings with the Bell operating company or its separate affiliate in which audit findings are discussed.

(3) Submit to the Chief, Enforcement Bureau, any accounting or rule interpretations necessary to complete the audit.

[62 FR 2926, Jan. 21, 1997, as amended at 67 FR 13226, Mar. 21, 2002]

§ 53.213 Audit analysis and evaluation.

(a) Within 60 dates after the end of the audit period, but prior to discussing the audit findings with the Bell operating company or the separate affiliate, the independent auditor shall submit a draft of the audit report to the Federal/State joint audit team.

(1) The Federal/State joint audit team shall have 45 days to review the audit findings and audit workpapers, and offer its recommendations concerning the conduct of the audit or the audit findings to the independent auditor. Exceptions of the Federal/State joint audit team to the finding and conclusions of the independent auditor that remain unresolved shall be included in the final audit report.

(2) Within 15 days after receiving the Federal/State joint audit team's recommendations and making appropriate revisions to the audit report, the independent auditor shall submit the audit report to the Bell operating company for its response to the audit findings and send a copy to the Federal/State joint audit team. The independent auditor may request additional time to perform additional audit work as recommended by the Federal/State joint audit team.

(b) Within 30 days after receiving the audit report, the Bell operating company will respond to the audit findings and send a copy of its response to the Federal/State joint audit team. The

Bell operating company's response shall be included as part of the final audit report along with any reply that the independent auditor wishes to make to the response.

(c) Within 10 days after receiving the response of the Bell operating company, the independent auditor shall make available for public inspection the final audit report by filing it with the Commission and the state regulatory agencies participating on the joint audit team.

(d) Interested parties may file comments with the Commission within 60 days after the audit report is made available for public inspection.

[62 FR 2927, Jan. 21, 1997]

Subpart D—Manufacturing by Bell Operating Companies

§ 53.301 [Reserved]

Subpart E—Electronic Publishing by Bell Operating Companies

§ 53.401 [Reserved]

Subpart F—Alarm Monitoring Services

§ 53.501 [Reserved]

PART 54—UNIVERSAL SERVICE

Subpart A—General Information

Sec.
54.1 Basis and purpose.
54.5 Terms and definitions.
54.7 Intended use of federal universal service support.
54.8 Prohibition on participation: suspension and debarment.

Subpart B—Services Designated for Support

54.101 Supported services for rural, insular and high cost areas.

Subpart C—Carriers Eligible for Universal Service Support

54.201 Definition of eligible telecommunications carriers, generally.
54.202 Additional requirements for Commission designation of eligible telecommunications carriers.
54.203 Designation of eligible telecommunications carriers for unserved areas.
54.205 Relinquishment of universal service.
54.207 Service areas.

Subpart D—Universal Service Support for High Cost Areas

54.301 Local switching support.
54.302 Monthly per-line limit on universal service support.
54.304 Administration of Connect America Fund Intercarrier Compensation Replacement.
54.305 Sale or transfer of exchanges.
54.307 Support to a competitive eligible telecommunications carrier.
54.309 Connect America Fund Phase II Public Interest Obligations.
54.310 Connect America Fund for Price Cap Territories—Phase II
54.312 Connect America Fund for Price Cap Territories—Phase I.
54.313 Annual reporting requirements for high-cost recipients.
54.314 Certification of support for eligible telecommunications carriers.
54.318 High-cost support; limitations on high-cost support.
54.319 Elimination of high-cost support in areas with 100 percent coverage by an unsubsidized competitor.
54.320 Compliance and recordkeeping for the high-cost program.

Subpart E—Universal Service Support for Low Income Consumers

54.400 Terms and definitions.
54.401 Lifeline defined.
54.403 Lifeline support amount.
54.404 The National Lifeline Accountability Database.
54.405 Carrier obligation to offer Lifeline.
54.407 Reimbursement for offering Lifeline.
54.409 Consumer qualification for Lifeline.
54.410 Subscriber eligibility determination and certification.
54.412 Off reservation Tribal lands designation process.
54.413 Link Up for Tribal lands.
54.414 Reimbursement for Tribal Link Up.
54.416 Annual certifications by eligible telecommunications carriers.
54.417 Recordkeeping requirements.
54.418 Digital television transition notices by eligible telecommunications carriers.
54.419 Validity of electronic signatures.
54.420 Low income program audits.
54.422 Annual reporting for eligible telecommunications carriers that receive low-income support.

Subpart F—Universal Service Support for Schools and Libraries

54.500 Terms and definitions.

54.501 Eligible recipients.
54.502 Eligible services.
54.503 Competitive bidding requirements.
54.504 Requests for services.
54.505 Discounts.
54.506 [Reserved]
54.507 Cap.
54.508 [Reserved]
54.509 Adjustments to the discount matrix.
54.511 Ordering services.
54.513 Resale and transfer of services.
54.514 Payment for discounted services.
54.515 Distributing support.
54.516 Auditing.
54.517 [Reserved]
54.518 Support for wide area networks.
54.519 State telecommunications networks.
54.520 Children's Internet Protection Act certifications required from recipients of discounts under the federal universal service support mechanism for schools and libraries.
54.522 [Reserved]
54.523 Payment for the non-discount portion of supported services.

Subpart G—Universal Service Support for Health Care Providers

DEFINED TERMS AND ELIGIBILITY

54.600 Terms and definitions.
54.601 Health care provider eligibility.
54.602 Health care support mechanism.

TELECOMMUNICATIONS PROGRAM

54.603 Competitive bidding and certification requirements.
54.604 Consortia, telecommunications services, and existing contracts.
54.605 Determining the urban rate.
54.607 Determining the rural rate.
54.609 Calculating support.
54.613 Limitations on supported services for rural health care providers.
54.615 Obtaining services.
54.619 Audits and recordkeeping.
54.623 Annual filing and funding commitment requirement.
54.625 Support for telecommunications services beyond the maximum supported distance for rural health care providers.

HEALTHCARE CONNECT FUND

54.630 Eligible recipients.
54.631 Designation of Consortium Leader.
54.632 Letters of agency (LOA).
54.633 Health care provider contribution.
54.634 Eligible services.
54.635 Eligible equipment.
54.636 Eligible participant-constructed and owned network facilities for consortium applicants.
54.637 Off-site data centers and off-site administrative offices.
54.638 Upfront payments.
54.639 Ineligible expenses.
54.640 Eligible vendors.
54.642 Competitive bidding requirement and exemptions.
54.643 Funding commitments.
54.644 Multi-year commitments.
54.645 Payment process.
54.646 Site and service substitutions.
54.647 Data collection and reporting.
54.648 Audits and recordkeeping.
54.649 Certifications.

GENERAL PROVISIONS

54.671 Resale.
54.672 Duplicate support.
54.675 Cap.
54.679 Election to offset support against annual universal service fund contribution.
54.680 Validity of electronic signatures.

Subpart H—Administration

54.701 Administrator of universal service support mechanisms.
54.702 Administrator's functions and responsibilities.
54.703 The Administrator's Board of Directors.
54.704 The Administrator's Chief Executive Officer.
54.705 Committees of the Administrator's Board of Directors.
54.706 Contributions.
54.707 Audit controls.
54.708 De minimis exemption.
54.709 Computations of required contributions to universal service support mechanisms.
54.711 Contributor reporting requirements.
54.712 Contributor recovery of universal service costs from end users.
54.713 Contributors' failure to report or to contribute.
54.715 Administrative expenses of the Administrator.
54.717 Audits of the Administrator.

Subpart I—Review of Decisions Issued by the Administrator

54.719 Parties permitted to seek review of Administrator decision.
54.720 Filing deadlines.
54.721 General filing requirements.
54.722 Review by the Wireline Competition Bureau or the Commission.
54.723 Standard of review.
54.724 Time periods for Commission approval of Administrator decisions.
54.725 Universal service disbursements during pendency of a request for review and Administrator decision.

Subpart J—Interstate Access Universal Service Support Mechanism

54.800 Terms and definitions.
54.801 General.

54.802 Obligations of local exchange carriers and the Administrator.
54.803 Universal service zones.
54.804 Preliminary minimum access universal service support for a study area calculated by the Administrator.
54.805 Zone and study area above benchmark revenues calculated by the Administrator.
54.806 Calculation by the Administrator of interstate access universal service support for areas served by price cap local exchange carriers.
54.807 Interstate access universal service support.
54.808 Transition provisions and periodic calculation.
54.809 Carrier certification.

Subpart K—Interstate Common Line Support Mechanism for Rate-of-Return Carriers

54.901 Calculation of Interstate Common Line Support.
54.902 Calculation of Interstate Common Line Support for transferred exchanges.
54.903 Obligations of rate-of-return carriers and the Administrator.
54.904 Carrier certification.

Subpart L—Mobility Fund

54.1001 Mobility Fund—Phase I.
54.1002 Geographic areas eligible for support.
54.1003 Provider eligibility.
54.1004 Service to Tribal Lands.
54.1005 Application process.
54.1006 Public interest obligations.
54.1007 Letter of credit.
54.1008 Mobility Fund Phase I disbursements.
54.1009 Annual reports.
54.1010 Record retention for Mobility Fund Phase I.

Subpart M—High Cost Loop Support for Rate-of-Return Carriers

54.1301 General.
54.1302 Calculation of incumbent local exchange carrier portion of nationwide loop cost expense adjustment for rate-of-return carriers.
54.1303 Calculation of the rural growth factor.
54.1304 Calculation of safety net additive.
54.1305 Submission of information to the National Exchange Carrier Association (NECA).
54.1306 Updating information submitted to the National Exchange Carrier Association.
54.1307 Submission of information by the National Exchange Carrier Association.
54.1308 Study area total unseparated loop cost.
54.1309 National and study area average unseparated loop costs.
54.1310 Expense adjustment.

AUTHORITY: Sections 1, 4(i), 5, 201, 205, 214, 219, 220, 254, 303(r), and 403 of the Communications Act of 1934, as amended, and section 706 of the Communications Act of 1996, as amended; 47 U.S.C. 151, 154(i), 155, 201, 205, 214, 219, 220, 254, 303(r), 403, and 1302 unless otherwise noted.

SOURCE: 62 FR 32948, June 17, 1997, unless otherwise noted.

Subpart A—General Information

§ 54.1 Basis and purpose.

(a) *Basis*. These rules are issued pursuant to the Communications Act of 1934, as amended.

(b) *Purpose*. The purpose of these rules is to implement section 254 of the Communications Act of 1934, as amended, 47 USC 254.

§ 54.5 Terms and definitions.

Terms used in this part have the following meanings:

Act. The term ''Act'' refers to the Communications Act of 1934, as amended.

Administrator. The term ''Administrator'' shall refer to the Universal Service Administrative Company that is an independent subsidiary of the National Exchange Carrier Association, Inc., and that has been appointed the permanent Administrator of the federal universal service support mechanisms.

Community anchor institutions. For the purpose of high-cost support, ''community anchor institutions'' refers to schools, libraries, health care providers, community colleges, other institutions of higher education, and other community support organizations and entities.

Competitive eligible telecommunications carrier. A ''competitive eligible telecommunications carrier'' is a carrier that meets the definition of an ''eligible telecommunications carrier'' below and does not meet the definition of an ''incumbent local exchange carrier'' in § 51.5 of this chapter.

Contributor. The term ''contributor'' shall refer to an entity required to contribute to the universal service support mechanisms pursuant to § 54.706.

Eligible telecommunications carrier. ''Eligible telecommunications carrier'' means a carrier designated as such under subpart C of this part.

High-cost support. ''High-cost support'' refers to those support mechanisms in existence as of October 1, 2011, specifically, high-cost loop support, safety net additive and safety valve provided pursuant to subpart F of part 36, local switching support pursuant to § 54.301, forward-looking support pursuant to § 54.309, interstate access support pursuant to §§ 54.800 through 54.809, and interstate common line support pursuant to §§ 54.901 through 54.904, support provided pursuant to §§ 51.915, 51.917, and 54.304, support provided to competitive eligible telecommunications carriers as set forth in § 54.307(e), Connect America Fund support provided pursuant to § 54.312, and Mobility Fund support provided pursuant to subpart L of this part.

Incumbent local exchange carrier. ''Incumbent local exchange carrier'' or ''ILEC'' has the same meaning as that term is defined in § 51.5 of this chapter.

Information service. ''Information service'' is the offering of a capability for generating, acquiring, storing, transforming, processing, retrieving, utilizing, or making available information via telecommunications, and includes electronic publishing, but does not include any use of any such capability for the management, control, or operation of a telecommunications system or the management of a telecommunications service.

Interconnected VoIP Provider. An ''interconnected VoIP provider'' is an entity that provides interconnected VoIP service, as that term is defined in section 9.3 of these rules.

Internet access. ''Internet access'' includes the following elements:

(1) The transmission of information as common carriage; and

(2) The transmission of information as part of a gateway to an information service, when that transmission does not involve the generation or alteration of the content of information, but may include data transmission, address translation, protocol conversion, billing management, introductory information content, and navigational systems that enable users to access information services, and that do not affect the presentation of such information to users.

Interstate telecommunication. ''Interstate telecommunication'' is a communication or transmission:

(1) From any State, Territory, or possession of the United States (other than the Canal zone), or the District of Columbia, to any other State, Territory, or possession of the United States (other than the Canal Zone), or the District of Columbia,

(2) From or to the United States to or from the Canal Zone, insofar as such communication or transmission takes place within the United States, or

(3) Between points within the United States but through a foreign country.

Interstate transmission. ''Interstate transmission'' is the same as interstate telecommunication.

Intrastate telecommunication. ''Intrastate telecommunication'' is a communication or transmission from within any State, Territory, or possession of the United States, or the District of Columbia to a location within that same State, Territory, or possession of the United States, or the District of Columbia.

Intrastate transmission. ''Intrastate transmission'' is the same as intrastate telecommunication.

LAN. ''LAN'' is a local area network, which is a set of high-speed links connecting devices, generally computers, on a single shared medium, usually on the user's premises.

Rate-of-return carrier. ''Rate-of-return carrier'' shall refer to any incumbent local exchange carrier not subject to price cap regulation as that term is defined in § 61.3(ee) of this chapter.

Rural area. For purposes of the schools and libraries universal support mechanism, a ''rural area'' is a nonmetropolitan county or county equivalent, as defined in the Office of Management and Budget's (OMB) Revised Standards for Defining Metropolitan Areas in the 1990s and identifiable from the most recent Metropolitan Statistical Area (MSA) list released by OMB, or any contiguous non-urban Census

Tract or Block Numbered Area within an MSA–listed metropolitan county identified in the most recent Goldsmith Modification published by the Office of Rural Health Policy of the U.S. Department of Health and Human Services.

Rural incumbent local exchange carrier. ''Rural incumbent local exchange carrier'' is a carrier that meets the definitions of ''rural telephone company'' and ''incumbent local exchange carrier,'' as those terms are defined in § 51.5 of this chapter.

Rural telephone company. ''Rural telephone company'' has the same meaning as that term is defined in § 51.5 of this chapter.

State commission. The term ''state commission'' means the commission, board or official (by whatever name designated) that, under the laws of any state, has regulatory jurisdiction with respect to intrastate operations of carriers.

Technically feasible. ''Technically feasible'' means capable of accomplishment as evidenced by prior success under similar circumstances. For example, preexisting access at a particular point evidences the technical feasibility of access at substantially similar points. A determination of technical feasibility does not consider economic, accounting, billing, space or site except that space and site may be considered if there is no possibility of expanding available space.

Telecommunications. ''Telecommunications'' is the transmission, between or among points specified by the user, of information of the user's choosing, without change in the form or content of the information as sent and received.

Telecommunications carrier. A ''telecommunications carrier'' is any provider of telecommunications services, except that such term does not include aggregators of telecommunications services as defined in section 226 of the Act. A telecommunications carrier shall be treated as a common carrier under the Act only to the extent that it is engaged in providing telecommunications services, except that the Commission shall determine whether the provision of fixed and mobile satellite service shall be treated as common carriage. This definition includes cellular mobile radio service (CMRS) providers, interexchange carriers (IXCs) and, to the extent they are acting as telecommunications carriers, companies that provide both telecommunications and information services. Private mobile radio service (PMRS) providers are telecommunications carriers to the extent they provide domestic or international telecommunications for a fee directly to the public.

Telecommunications channel. ''Telecommunications channel'' means a telephone line, or, in the case of wireless communications, a transmittal line or cell site.

Telecommunications service. ''Telecommunications service'' is the offering of telecommunications for a fee directly to the public, or to such classes of users as to be effectively available directly to the public, regardless of the facilities used.

Tribal lands. For the purposes of high-cost support, ''Tribal lands'' include any federally recognized Indian tribe's reservation, pueblo or colony, including former reservations in Oklahoma, Alaska Native regions established pursuant to the Alaska Native Claims Settlement Act (85 Stat. 688) and Indian Allotments, *see* § 54.400(e), as well as Hawaiian Home Lands—areas held in trust for native Hawaiians by the state of Hawaii, pursuant to the Hawaiian Homes Commission Act, 1920, July 9, 1921, 42 Stat 108, *et seq.*, as amended.

Unsubsidized competitor. An ''unsubsidized competitor'' is a facilities-based provider of residential fixed voice and broadband service that does not receive high-cost support.

Website. The term ''website'' shall refer to any websites operated by the Administrator in connection with the schools and libraries support mechanism, the rural health care support mechanism, the high cost mechanism, and the low income mechanism.

Wire center. A wire center is the location of a local switching facility containing one or more central offices, as defined in the Appendix to part 36 of

this chapter. The wire center boundaries define the area in which all customers served by a given wire center are located.

[62 FR 32948, June 17, 1997, as amended at 62 FR 41303, Aug. 1, 1997; 63 FR 70571, Dec. 21, 1998; 64 FR 67431, Dec. 1, 1999; 66 FR 30087, June 5, 2001; 66 FR 59726, Nov. 30, 2001; 70 FR 6372, Feb. 7, 2005; 71 FR 38796, July 10, 2006; 76 FR 73869, Nov. 29, 2011; 77 FR 12966, Mar. 2, 2012; 77 FR 20553, Apr. 5, 2012; 77 FR 30913, May 24, 2012; 78 FR 13982, Mar. 1, 2013; 79 FR 49197, Aug. 19, 2014]

§ 54.7 Intended use of federal universal service support.

(a) A carrier that receives federal universal service support shall use that support only for the provision, maintenance, and upgrading of facilities and services for which the support is intended.

(b) The use of federal universal service support that is authorized by paragraph (a) of this section shall include investments in plant that can, either as built or with the addition of plant elements, when available, provide access to advanced telecommunications and information services.

[76 FR 73869, Nov. 29, 2011]

§ 54.8 Prohibition on participation: suspension and debarment.

(a) *Definitions*—(1) Activities associated with or related to the schools and libraries support mechanism, the high-cost support mechanism, the rural health care support mechanism, and the low-income support mechanism. Such matters include the receipt of funds or discounted services through one or more of these support mechanisms, or consulting with, assisting, or advising applicants or service providers regarding one or more of these support mechanisms.

(2) *Civil liability*. The disposition of a civil action by any court of competent jurisdiction, whether entered by verdict, decision, settlement with admission of liability, stipulation, or otherwise creating a civil liability for the wrongful acts complained of, or a final determination of liability under the Program Fraud Civil Remedies Act of 1988 (31 U.S.C. 3801–12).

(3) *Consultant*. A person that for consideration advises or consults a person regarding the schools and libraries support mechanism, but who is not employed by the person receiving the advice or consultation.

(4) *Conviction*. A judgment or conviction of a criminal offense by any court of competent jurisdiction, whether entered by verdict or a plea, including a plea of *nolo contendere*.

(5) *Debarment*. Any action taken by the Commission in accordance with these regulations to exclude a person from activities associated with or relating to the schools and libraries support mechanism, the high-cost support mechanism, the rural health care support mechanism, and the low-income support mechanism. A person so excluded is ''debarred.''

(6) *Person*. Any individual, group of individuals, corporation, partnership, association, unit of government or legal entity, however organized.

(7) *Suspension*. An action taken by the Commission in accordance with these regulations that immediately excludes a person from activities associated with or relating to the schools and libraries support mechanism, the high-cost support mechanism, the rural health care support mechanism, and the low-income support mechanism for a temporary period, pending completion of the debarment proceedings. A person so excluded is ''suspended.''

(b) *Suspension and debarment in general*. The Commission shall suspend and debar a person for any of the causes in paragraph (c) of this section using procedures established in this section, absent extraordinary circumstances.

(c) *Causes for suspension and debarment*. Causes for suspension and debarment are conviction of or civil judgment for attempt or commission of criminal fraud, theft, embezzlement, forgery, bribery, falsification or destruction of records, making false statements, receiving stolen property, making false claims, obstruction of justice and other fraud or criminal offense arising out of activities associated with or related to the schools and libraries support mechanism, the high-cost support mechanism, the rural health care support mechanism, and the low-income support mechanism.

(d) Effect of suspension and debarment. Unless otherwise ordered, any

persons suspended or debarred shall be excluded from activities associated with or related to the schools and libraries support mechanism, the high-cost support mechanism, the rural health care support mechanism, and the low-income support mechanism. Suspension and debarment of a person other than an individual constitutes suspension and debarment of all divisions and/or other organizational elements from participation in the program for the suspension and debarment period, unless the notice of suspension and proposed debarment is limited by its terms to one or more specifically identified individuals, divisions, or other organizational elements or to specific types of transactions.

(e) *Procedures for suspension and debarment.* The suspension and debarment process shall proceed as follows:

(1) Upon evidence that there exists cause for suspension and debarment, the Commission shall provide prompt notice of suspension and proposed debarment to the person. Suspension shall be effective upon the earlier of receipt of notification or publication in the FEDERAL REGISTER.

(2) The notice shall:

(i) Give the reasons for the proposed debarment in terms sufficient to put a person on notice of the conduct or transaction(s) upon which it is based and the cause relied upon, namely, the entry of a criminal conviction or civil judgment arising out of activities associated with or related to the schools and libraries support mechanism, the high-cost support mechanism, the rural health care support mechanism, and the low-income support mechanism;

(ii) Explain the applicable debarment procedures;

(iii) Describe the effect of debarment.

(3) A person subject to proposed debarment, or who has an existing contract with a person subject to proposed debarment or intends to contract with such a person to provide or receive services in matters arising out of activities associated with or related to the schools and libraries support mechanism, the high-cost support mechanism, the rural health care support mechanism, and the low-income support mechanism may contest debarment or the scope of the proposed debarment. A person contesting debarment or the scope of proposed debarment must file arguments and any relevant documentation within thirty (30) calendar days of receipt of notice or publication in the FEDERAL REGISTER, whichever is earlier.

(4) A person subject to proposed debarment, or who has an existing contract with a person subject to proposed debarment or intends to contract with such a person to provide or receive services in matters arising out of activities associated with or related to the schools and libraries support mechanism, the high-cost support mechanism, the rural health care support mechanism, and the low-income support mechanism may also contest suspension or the scope of suspension, but such action will not ordinarily be granted. A person contesting suspension or the scope of suspension must file arguments and any relevant documentation within thirty (30) calendar days of receipt of notice or publication in the FEDERAL REGISTER, whichever is earlier.

(5) Within ninety (90) days of receipt of any information submitted by the respondent, the Commission, in the absence of extraordinary circumstances, shall provide the respondent prompt notice of the decision to debar. Debarment shall be effective upon the earlier of receipt of notice or publication in the FEDERAL REGISTER.

(f) *Reversal or limitation of suspension or debarment.* The Commission may reverse a suspension or debarment, or limit the scope or period of suspension or debarment, upon a finding of extraordinary circumstances, after due consideration following the filing of a petition by an interested party or upon motion by the Commission. Reversal of the conviction or civil judgment upon which the suspension and debarment was based is an example of extraordinary circumstances.

(g) *Time period for debarment.* A debarred person shall be prohibited from involvement with the schools and libraries support mechanism for three (3) years from the date of debarment. The Commission may, if necessary to protect the public interest, set a longer period of debarment or extend the existing period of debarment. If multiple

convictions or judgments have been rendered, the Commission shall determine based on the facts before it whether debarments shall run concurrently or consecutively.

[68 FR 36943, June 20, 2003. Redesignated and amended at 72 FR 54218, Sept. 24, 2007]

Subpart B—Services Designated for Support

§ 54.101 Supported services for rural, insular and high cost areas.

(a) *Services designated for support.* Voice Telephony services shall be supported by federal universal service support mechanisms. Eligible voice telephony services must provide voice grade access to the public switched network or its functional equivalent; minutes of use for local service provided at no additional charge to end users; access to the emergency services provided by local government or other public safety organizations, such as 911 and enhanced 911, to the extent the local government in an eligible carrier's service area has implemented 911 or enhanced 911 systems; and toll limitation services to qualifying low-income consumers as provided in subpart E of this part.

(b) An eligible telecommunications carrier must offer voice telephony service as set forth in paragraph (a) of this section in order to receive federal universal service support.

[76 FR 73870, Nov. 29, 2011, as amended at 77 FR 12966, Mar. 2, 2012]

Subpart C—Carriers Eligible for Universal Service Support

§ 54.201 Definition of eligible telecommunications carriers, generally.

(a) *Carriers eligible to receive support.* (1) Only eligible telecommunications carriers designated under this subpart shall receive universal service support distributed pursuant to part 36 of this chapter, and subparts D and E of this part.

(2) [Reserved]

(3) This paragraph does not apply to offset or reimbursement support distributed pursuant to subpart G of this part.

(4) This paragraph does not apply to support distributed pursuant to subpart F of this part.

(b) A state commission shall upon its own motion or upon request designate a common carrier that meets the requirements of paragraph (d) of this section as an eligible telecommunications carrier for a service area designated by the state commission.

(c) Upon request and consistent with the public interest, convenience, and necessity, the state commission may, in the case of an area served by a rural telephone company, and shall, in the case of all other areas, designate more than one common carrier as an eligible telecommunications carrier for a service area designated by the state commission, so long as each additional requesting carrier meets the requirements of paragraph (d) of this section. Before designating an additional eligible telecommunications carrier for an area served by a rural telephone company, the state commission shall find that the designation is in the public interest.

(d) A common carrier designated as an eligible telecommunications carrier under this section shall be eligible to receive universal service support in accordance with section 254 of the Act and shall, throughout the service area for which the designation is received:

(1) Offer the services that are supported by federal universal service support mechanisms under subpart B of this part and section 254(c) of the Act, either using its own facilities or a combination of its own facilities and resale of another carrier's services (including the services offered by another eligible telecommunications carrier); and

(2) Advertise the availability of such services and the charges therefore using media of general distribution.

(e) For the purposes of this section, the term *facilities* means any physical components of the telecommunications network that are used in the transmission or routing of the services that are designated for support pursuant to subpart B of this part.

(f) For the purposes of this section, the term ''own facilities'' includes, but is not limited to, facilities obtained as unbundled network elements pursuant to part 51 of this chapter, provided that

such facilities meet the definition of the term ''facilities'' under this subpart.

(g) A state commission shall not require a common carrier, in order to satisfy the requirements of paragraph (d)(1) of this section, to use facilities that are located within the relevant service area, as long as the carrier uses facilities to provide the services designated for support pursuant to subpart B of this part within the service area.

(h) A state commission shall not designate a common carrier as an eligible telecommunications carrier for purposes of receiving support only under subpart E of this part unless the carrier seeking such designation has demonstrated that it is financially and technically capable of providing the supported Lifeline service in compliance with subpart E of this part.

(i) A state commission shall not designate as an eligible telecommunications carrier a telecommunications carrier that offers the services supported by federal universal service support mechanisms exclusively through the resale of another carrier's services.

[62 FR 32948, June 17, 1997, as amended at 63 FR 2125, Jan. 13, 1998; 64 FR 62123, Nov. 16, 1999; 71 FR 65750, Nov. 9, 2006; 77 FR 12966, Mar. 2, 2012]

§ 54.202 Additional requirements for Commission designation of eligible telecommunications carriers.

(a) In order to be designated an eligible telecommunications carrier under section 214(e)(6), any common carrier in its application must:

(1)(i) Certify that it will comply with the service requirements applicable to the support that it receives.

(ii) Submit a five-year plan that describes with specificity proposed improvements or upgrades to the applicant's network throughout its proposed service area. Each applicant shall estimate the area and population that will be served as a result of the improvements. Except, a common carrier seeking designation as an eligible telecommunications carrier in order to provide supported services only under subpart E of this part does not need to submit such a five-year plan.

(2) Demonstrate its ability to remain functional in emergency situations, including a demonstration that it has a reasonable amount of back-up power to ensure functionality without an external power source, is able to reroute traffic around damaged facilities, and is capable of managing traffic spikes resulting from emergency situations.

(3) Demonstrate that it will satisfy applicable consumer protection and service quality standards. A commitment by wireless applicants to comply with the Cellular Telecommunications and Internet Association's Consumer Code for Wireless Service will satisfy this requirement. Other commitments will be considered on a case-by-case basis.

(4) For common carriers seeking designation as an eligible telecommunications carrier for purposes of receiving support only under subpart E of this part, demonstrate that it is financially and technically capable of providing the Lifeline service in compliance with subpart E of this part.

(5) For common carriers seeking designation as an eligible telecommunications carrier for purposes of receiving support only under subpart E of this part, submit information describing the terms and conditions of any voice telephony service plans offered to Lifeline subscribers, including details on the number of minutes provided as part of the plan, additional charges, if any, for toll calls, and rates for each such plan. To the extent the eligible telecommunications carrier offers plans to Lifeline subscribers that are generally available to the public, it may provide summary information regarding such plans, such as a link to a public Web site outlining the terms and conditions of such plans.

(b) *Public interest standard*. Prior to designating an eligible telecommunications carrier pursuant to section 214(e)(6), the Commission determines that such designation is in the public interest.

(c) A common carrier seeking designation as an eligible telecommunications carrier under section 214(e)(6) for any part of Tribal lands shall provide a copy of its petition to the affected tribal government and tribal regulatory authority, as applicable, at the time it files its petition with the Federal Communications Commission.

In addition, the Commission shall send any public notice seeking comment on any petition for designation as an eligible telecommunications carrier on Tribal lands, at the time it is released, to the affected tribal government and tribal regulatory authority, as applicable, by the most expeditious means available.

[77 FR 12966, Mar. 2, 2012]

§ 54.203 Designation of eligible telecommunications carriers for unserved areas.

(a) If no common carrier will provide the services that are supported by federal universal service support mechanisms under section 254(c) of the Act and subpart B of this part to an unserved community or any portion thereof that requests such service, the Commission, with respect to interstate services, or a state commission, with respect to intrastate services, shall determine which common carrier or carriers are best able to provide such service to the requesting unserved community or portion thereof and shall order such carrier or carriers to provide such service for that unserved community or portion thereof.

(b) Any carrier or carriers ordered to provide such service under this section shall meet the requirements of section 54.201(d) and shall be designated as an eligible telecommunications carrier for that community or portion thereof.

§ 54.205 Relinquishment of universal service.

(a) A state commission shall permit an eligible telecommunications carrier to relinquish its designation as such a carrier in any area served by more than one eligible telecommunications carrier. An eligible telecommunications carrier that seeks to relinquish its eligible telecommunications carrier designation for an area served by more than one eligible telecommunications carrier shall give advance notice to the state commission of such relinquishment.

(b) Prior to permitting a telecommunications carrier designated as an eligible telecommunications carrier to cease providing universal service in an area served by more than one eligible telecommunications carrier, the state commission shall require the remaining eligible telecommunications carrier or carriers to ensure that all customers served by the relinquishing carrier will continue to be served, and shall require sufficient notice to permit the purchase or construction of adequate facilities by any remaining eligible telecommunications carrier. The state commission shall establish a time, not to exceed one year after the state commission approves such relinquishment under this section, within which such purchase or construction shall be completed.

§ 54.207 Service areas.

(a) The term *service area* means a geographic area established by a state commission for the purpose of determining universal service obligations and support mechanisms. A service area defines the overall area for which the carrier shall receive support from federal universal service support mechanisms.

(b) In the case of a service area served by a rural telephone company, *service area* means such company's ''study area'' unless and until the Commission and the states, after taking into account recommendations of a Federal-State Joint Board instituted under section 410(c) of the Act, establish a different definition of service area for such company.

(c) If a state commission proposes to define a service area served by a rural telephone company to be other than such company's study area, the Commission will consider that proposed definition in accordance with the procedures set forth in this paragraph.

(1) A state commission or other party seeking the Commission's agreement in redefining a service area served by a rural telephone company shall submit a petition to the Commission. The petition shall contain:

(i) The definition proposed by the state commission; and

(ii) The state commission's ruling or other official statement presenting the state commission's reasons for adopting its proposed definition, including an analysis that takes into account the recommendations of any Federal-State

Joint Board convened to provide recommendations with respect to the definition of a service area served by a rural telephone company.

(2) The Commission shall issue a Public Notice of any such petition within fourteen (14) days of its receipt.

(3) The Commission may initiate a proceeding to consider the petition within ninety (90) days of the release date of the Public Notice.

(i) If the Commission initiates a proceeding to consider the petition, the proposed definition shall not take effect until both the state commission and the Commission agree upon the definition of a rural service area, in accordance with paragraph (b) of this section and section 214(e)(5) of the Act.

(ii) If the Commission does not act on the petition within ninety (90) days of the release date of the Public Notice, the definition proposed by the state commission will be deemed approved by the Commission and shall take effect in accordance with state procedures.

(d) The Commission may, on its own motion, initiate a proceeding to consider a definition of a service area served by a rural telephone company that is different from that company's study area. If it proposes such different definition, the Commission shall seek the agreement of the state commission according to this paragraph.

(1) The Commission shall submit a petition to the state commission according to that state commission's procedures. The petition submitted to the relevant state commission shall contain:

(i) The definition proposed by the Commission; and

(ii) The Commission's decision presenting its reasons for adopting the proposed definition, including an analysis that takes into account the recommendations of any Federal-State Joint Board convened to provide recommendations with respect to the definition of a service area served by a rural telephone company.

(2) The Commission's proposed definition shall not take effect until both the state commission and the Commission agree upon the definition of a rural service area, in accordance with paragraph (b) of this section and section 214(e)(5) of the Act.

(e) The Commission delegates its authority under paragraphs (c) and (d) of this section to the Chief, Wireline Competition Bureau.

[62 FR 32948, June 17, 1997, as amended at 67 FR 13226, Mar. 21, 2002]

Subpart D—Universal Service Support for High Cost Areas

§ 54.301 Local switching support.

(a) *Calculation of local switching support.*(1) Beginning January 1, 1998 and ending December 31, 2011, an incumbent local exchange carrier that has been designated an eligible telecommunications carrier and that serves a study area with 50,000 or fewer access lines shall receive support for local switching costs using the following formula: The carrier's projected annual unseparated local switching revenue requirement, calculated pursuant to paragraph (d) of this section, shall be multiplied by the local switching support factor. Beginning January 1, 2012 and ending June 30, 2012, a rate-of-return carrier, as that term is defined in § 54.5 of this chapter, that is an incumbent local exchange carrier that has been designated an eligible telecommunications carrier and that serves a study area with 50,000 or fewer access lines and is not affiliated with a price cap carrier, as that term is defined in § 61.3(aa) of this chapter, shall receive support for local switching costs frozen at the same support level received for calendar year 2011, subject to true-up. For purposes of this section, local switching costs shall be defined as Category 3 local switching costs under part 36 of this chapter. Beginning January 1, 2012, no carrier that is a price cap carrier, as that term is defined in § 61.3(aa) of this chapter, or a rate-of-return carrier, as that term is defined in § 54.5 of this chapter, that is affiliated with a price cap carrier, shall receive local switching support. Beginning July 1, 2012, no carrier shall receive local switching support.

(2) *Local switching support factor.* (i) The local switching support factor shall be defined as the difference between the 1996 weighted interstate

DEM factor, calculated pursuant to § 36.125(f) of this chapter, and the 1996 unweighted interstate DEM factor.

(ii) If the number of a study area's access lines increases such that, under § 36.125(f) of this chapter, the weighted interstate DEM factor for 1997 or any successive year would be reduced, that lowered weighted interstate DEM factor shall be applied to the study area's 1996 unweighted interstate DEM factor to derive a new local switching support factor. If the number of a study area's access lines decreases or has decreased such that, under § 36.125(f) of this chapter, the weighted interstate DEM factor for 2010 or any successive year would be raised, that higher weighted interstate DEM factor shall be applied to the study area's 1996 unweighted interstate DEM factor to derive a new local switching support factor.

(3) Beginning January 1, 1998, the sum of the unweighted interstate DEM factor, as defined in § 36.125(a)(5) of this chapter, and the local switching support factor shall not exceed 0.85. If the sum of those two factors would exceed 0.85, the local switching support factor shall be reduced to a level that would reduce the sum of the factors to 0.85.

(b) *Submission of data to the Administrator.* Until October 1, 2011, each incumbent local exchange carrier that has been designated an eligible telecommunications carrier and that serves a study area with 50,000 or fewer access lines shall, for each study area, provide the Administrator with the projected total unseparated dollar amount assigned to each account listed below for the calendar year following each filing. This information must be provided to the Administrator no later than October 1 of each year. The Administrator shall use this information to calculate the projected annual unseparated local switching revenue requirement pursuant to paragraph (d) of this section.

I	
Telecommunications Plant in Service (TPIS)	Account 2001
Telecommunications Plant—Other	Accounts 2002, 2003, 2005
General Support Assets	Account 2110
Central Office Assets	Accounts 2210, 2220, 2230
Central Office-switching, Category 3 (local switching).	Account 2210, Category 3
Information Origination/termination Assets	Account 2310
Cable and Wire Facilities Assets	Account 2410
Amortizable Tangible Assets	Account 2680
Intangibles	Account 2690
II	
Rural Telephone Bank (RTB) Stock	Included in Account 1410
Materials and Supplies	Account 1220.1
Cash Working Capital	Defined in 47 CFR 65.820(d)
III	
Accumulated Depreciation	Account 3100
Accumulated Amortization	Included in Accounts 2005, 2680, 2690, 3410
Net Deferred Operating Income Taxes	Accounts 4100, 4340
Network Support Expenses	Account 6110
General Support Expenses	Account 6120
Central Office Switching, Operator Systems, and Central Office Transmission Expenses.	Accounts 6210, 6220, 6230
Information Origination/Termination Expenses	Account 6310
Cable and Wire Facilities Expenses	Account 6410
Other Property, Plant and Equipment Expenses	Account 6510
Network Operations Expenses	Account 6530
Access Expense	Account 6540
Depreciation and Amortization Expense	Account 6560
Marketing Expense	Account 6610
Services Expense	Account 6620
Corporate Operations Expense	Account 6720

Operating Taxes	Accounts 7230, 7240
Federal Investment Tax Credits	Account 7210
Provision for Deferred Operating Income Taxes-Net.	Account 7250
Allowance for Funds Used During Construction	Included in Account 7300
Charitable Contributions	Included in Account 7300
Interest and Related Items	Account 7500
IV	
Other Non-Current Assets	Included in Account 1410
Deferred Maintenance and Retirements	Included in Account 1438
Deferred Charges	Included in Account 1438
Other Jurisdictional Assets and Liabilities	Accounts 1500, 4370
Customers' Deposits	Account 4040
Other Long-Term Liabilities	Included in Account 4300

(c) *Allocation of accounts to switching.* The Administrator shall allocate to local switching, the accounts reported pursuant to paragraph (b) of this section as prescribed in this paragraph.

(1) General Support Assets (Account 2110); Amortizable Tangible Assets (Account 2680); Intangibles (Account 2690); and General Support Expenses (Account 6120) shall be allocated according to the following factor:

Account 2210 Category÷3 (Account 2210 + Account 2220 + Account 2230 + Account 2310 + Account 2410).

(2) Telecommunications Plant—Other (Accounts 2002, 2003, 2005); Rural Telephone Bank (RTB) Stock (included in Account 1410); Materials and Supplies (Account 1220.1); Cash Working Capital (Sec. 65.820(d) of this chapter); Accumulated Amortization (Included in Accounts 2005, 2680, 2690, 3410); Net Deferred Operating Income Taxes (Accounts 4100, 4340); Network Support Expenses (Account 6110); Other Property, Plant and Equipment Expenses (Account 6510); Network Operations Expenses (Account 6530); Marketing Expense (Account 6610); Services Expense (Account 6620); Operating Taxes (Accounts 7230, 7240); Federal Investment Tax Credits (Accounts 7210); Provision for Deferred Operating Income Taxes—Net (Account 7250); Interest and Related Items (Account 7500); Allowance for Funds Used During Construction (Included in Account 7300); Charitable Contributions (included in Account 7300); Other Non-current Assets (Included in Account 1410); Other Jurisdictional Assets and Liabilities (Accounts 1500, 4370); Customer Deposits (Account 4040); Other Long-term Liabilities (Included in Account 4300); and Deferred Maintenance and Retirements (Included in Account 1438) shall be allocated according to the following factor:

Account 2210 Category 3 Account 2001.

(3) Accumulated Depreciation for Central Office—switching (Account 3100 associated with Account 2210) and Depreciation and Amortization Expense for Central Office—switching (Account 6560 associated with Account 2210) shall be allocated according to the following factor:

Account 2210 Category 3÷Account 2210.

(4) Accumulated Depreciation for General Support Assets (Account 3100 associated with Account 2110) and Depreciation and Amortization Expense for General Support Assets (Account 6560 associated with Account 2110) shall be allocated according to the following factor:

Account 2210 Category 3 ÷ Account 2001.

(5) Corporate Operations Expenses (Account 6720) shall be allocated according to the following factor:

[[Account 2210 Category 3 (Account 2210 + Account 2220 + Account 2230)]] × (Account 6210 + Account 6220 + Account 6230)] + [(Account 6530 + Account 6610 + Account 6620) × (Account 2210 Category 3 Account 2001)] (Account 6210 + Account 6220 + Account 6230 + Account 6310 + Account 6410 + Account 6530 + Account 6610 + Account 6620).

(6) Central Office Switching, Operator Systems, and Central Office Transmission Expenses (Account 6210,

Account 6220, Account 6230) shall be allocated according to the following factor:

Account 2210 Category 3 ÷ (Accounts 2210 + 2220 + 2230).

(d) *Calculation of the projected annual unseparated local switching revenue requirement*. The Administrator shall calculate the projected annual unseparated local switching revenue requirement by summing the components listed in this paragraph.

(1) Return on Investment attributable to COE Category 3 shall be obtained by multiplying the average projected unseparated local switching net investment by the authorized interstate rate of return. Projected unseparated local switching net investment shall be calculated as of each December 31 by deducting the accumulated reserves, deferrals and customer deposits attributable to the COE Category 3 investment from the gross investment attributable to COE Category 3. The average projected unseparated local switching net investment shall be calculated by summing the projected unseparated local switching net investment as of December 31 of the calendar year following the filing year and such investment as of December 31 of the filing year and dividing by 2.

(2) Depreciation expense attributable to COE Category 3 investment, allocated pursuant to paragraph (c) of this section.

(3) All expenses, excluding depreciation expense, collected in paragraph (b) of this section, allocated pursuant to paragraph (c) of this section.

(4) Federal income tax attributable to COE Category 3 shall be calculated using the following formula; the accounts listed shall be allocated pursuant to paragraph (c) of this section:

[Return on Investment attributable to COE Category 3—Included in Account 7300—Account 7500–Account 7210)] × [Federal Income Tax Rate (1—Federal Income Tax Rate)].

(e) *True-up adjustment*—(1) *Submission of true-up data*. Until December 31, 2012, each incumbent local exchange carrier that has been designated an eligible telecommunications carrier and that serves a study area with 50,000 or fewer access lines shall, for each study area, provide the Administrator with the historical total unseparated dollar amount assigned to each account listed in paragraph (b) of this section for each calendar year no later than 12 months after the end of such calendar year

(2) *Calculation of true-up adjustment*. (i) The Administrator shall calculate the historical annual unseparated local switching revenue requirement for each carrier when historical data for each calendar year are submitted.

(ii) The Administrator shall calculate each carrier's local switching support payment, calculated pursuant to 54.301(a), using its historical annual unseparated local switching revenue requirement.

(iii) For each carrier receiving local switching support, the Administrator shall calculate the difference between the support payment calculated pursuant to paragraph (e)(2)(ii) of this section and its support payment calculated using its projected annual unseparated local switching revenue requirement.

(iv) The Administrator shall adjust each carrier's local switching support payment by the difference calculated in paragraph (e)(2)(iii) of this section no later than 15 months after the end of the calendar year for which historical data are submitted.

[63 FR 2126, Jan. 13, 1998; 63 FR 33585, June 19, 1998, as amended at 67 FR 13226, Mar. 21, 2002; 67 FR 5701, Feb. 6, 2002; 75 FR 17874, Apr. 8, 2010; 76 FR 73870, Nov. 29, 2011; 77 FR 14302, Mar. 9, 2012]

§ 54.302 Monthly per-line limit on universal service support.

(a) Beginning July 1, 2012 and until June 30, 2013, each study area's universal service monthly support (not including Connect America Fund support provided pursuant to § 54.304) on a per-line basis shall not exceed $250 per-line plus two-thirds of the difference between its uncapped per-line monthly support and $250. Beginning July 1, 2013 and until June 30, 2014, each study area's universal service monthly support on a per-line basis shall not exceed $250 per-line plus one third of the difference between its uncapped per-line monthly support and $250. Beginning July 1, 2014, each study area's universal

service monthly per-line support shall not exceed $250.

(b) For purposes of this section, universal service support is defined as the sum of the amounts calculated pursuant to §§ 54.1304 and 54.1310, and §§ 54.305, and 54.901 through 54.904. Line counts for purposes of this section shall be as of the most recent line counts reported pursuant to § 54.1306(i).

(c) The Administrator, in order to limit support to $250 for affected carriers, shall reduce safety net additive support, high-cost loop support, safety valve support, and interstate common line support in proportion to the relative amounts of each support the study area would receive absent such limitation.

[76 FR 73870, Nov. 29, 2011, as amended at 79 FR 39188, July 9, 2014]

§ 54.304 Administration of Connect America Fund Intercarrier Compensation Replacement.

(a) The Administrator shall administer CAF ICC support pursuant to § 51.915 and § 51.917 of this chapter.

(b) The funding period is the period beginning July 1 through June 30 of the following year.

(c) For price cap carriers that are eligible and elect, pursuant to § 51.915(f) of this chapter, to receive CAF ICC support, the following provisions govern the filing of data with the Administrator, the Commission, and the relevant state commissions and the payment by the Administrator to those carriers of CAF ICC support amounts that the carrier is eligible to receive pursuant to § 51.915 of this chapter.

(1) A Price Cap Carrier seeking CAF ICC support pursuant to § 51.915 of this chapter shall file data with the Administrator, the Commission, and the relevant state commissions no later than June 30, 2012, for the first year, and on the date it files its annual access tariff filing with the Commission, in subsequent years, establishing the amount of the Price Cap Carrier's eligible CAF ICC funding during the upcoming funding period pursuant to § 51.915 of this chapter. The amount shall include any true-ups, pursuant to § 51.915 of this chapter, associated with an earlier funding period.

(2) The Administrator shall monthly pay each price cap carrier one-twelfth (1/12) of the amount the carrier is eligible to receive during that funding period.

(d) For rate-of-return carriers that are eligible and elect, pursuant to § 51.917(f) of this chapter, to receive CAF ICC support, the following provisions govern the filing of data with the Administrator, the Commission, and the relevant state commissions and the payment by the Administrator to those carriers of CAF ICC support amounts that the rate-of-return carrier is eligible to receive pursuant to § 51.917 of this chapter.

(1) A Rate-of-Return Carrier seeking CAF ICC support shall file data with the Administrator, the Commission, and the relevant state commissions no later than June 30, 2012, for the first year, and on the date it files its annual access tariff filing with the Commission, in subsequent years, establishing the Rate-of-Return Carrier's projected eligibility for CAF ICC funding during the upcoming funding period pursuant to § 51.917 of this chapter. The projected amount shall include any true-ups, pursuant to § 51.917 of this chapter, associated with an earlier funding period.

(2) The Administrator shall monthly pay each rate-of-return carrier one-twelfth (1/12) of the amount the carrier is to be eligible to receive during that funding period.

[76 FR 73871, Nov. 29, 2011, as amended at 78 FR 26268, May 6, 2013]

§ 54.305 Sale or transfer of exchanges.

(a) The provisions of this section are not applicable to the sale or transfer of exchanges between non-rural carriers after the complete phase-down of interim hold-harmless support, pursuant to § 54.311, for the non-rural carriers subject to the transaction. After December 31, 2011, the provisions of this section shall not be used to determine support for any price cap incumbent local exchange carrier or a rate-of-return carrier, as that term is defined in § 54.5 that is affiliated with a price cap incumbent local exchange carrier.

(b) Beginning January 1, 2012, any carrier subject to the provisions of this paragraph shall receive support pursuant to this paragraph or support based

on the actual costs of the acquired exchanges, whichever is less. Except as provided in paragraph (c) of this section, a carrier that acquires telephone exchanges from an unaffiliated carrier shall receive universal service support for the acquired exchanges at the same per-line support levels for which those exchanges were eligible prior to the transfer of the exchanges. If the acquired exchanges are incorporated into an existing rural incumbent local exchange carrier study area, the rural incumbent local exchange carrier shall maintain the costs associated with the acquired exchanges separate from the costs associated with its pre-acquisition study area. The transferred exchanges may be eligible for safety valve support for loop related costs pursuant to paragraph (d) of this section.

(c) A carrier that has entered into a binding agreement to buy or acquire exchanges from an unaffiliated carrier prior to May 7, 1997 will receive universal service support for the newly acquired lines based upon the average cost of all of its lines, both those newly acquired and those it had prior to execution of the sales agreement.

(d) Transferred exchanges in study areas operated by rural telephone companies that are subject to the limitations on loop-related universal service support in paragraph (b) of this section may be eligible for a safety valve loop cost expense adjustment based on the difference between the rural incumbent local exchange carrier's index year expense adjustment and subsequent year loop cost expense adjustments for the acquired exchanges. Safety valve loop cost expense adjustments shall only be available to rural incumbent local exchange carriers that, in the absence of restrictions on high-cost loop support in paragraph (b) of this section, would qualify for high-cost loop support for the acquired exchanges under § 54.1310.

(1) For carriers that buy or acquire telephone exchanges on or after January 10, 2005, from an unaffiliated carrier, the index year expense adjustment for the acquiring carrier's first year of operation shall equal the selling carrier's loop-related expense adjustment for the transferred exchanges for the 12-month period prior to the transfer of the exchanges. At the acquiring carrier's option, the first year of operation for the transferred exchanges, for purposes of calculating safety valve support, shall commence at the beginning of either the first calendar year or the next calendar quarter following the transfer of exchanges. For the first year of operation, a loop cost expense adjustment, using the costs of the acquired exchanges submitted in accordance with §§ 54.1305 and 54.1306, shall be calculated pursuant to § 54.1310 and then compared to the index year expense adjustment. Safety valve support for the first period of operation will then be calculated pursuant to paragraph (d)(3) of this section. The index year expense adjustment for years after the first year of operation shall be determined using cost data for the first year of operation of the transferred exchanges. Such cost data for the first year of operation shall be calculated in accordance with §§ 54.1305, 54.1306, and 54.1310. For each year, ending on the same calendar quarter as the first year of operation, a loop cost expense adjustment, using the loop costs of the acquired exchanges, shall be submitted and calculated pursuant to §§ 54.1305, 54.1306, and 54.1310 and will be compared to the index year expense adjustment. Safety valve support for the second year of operation and thereafter will then be calculated pursuant to paragraph (d)(3) of this section.

(2) For carriers that bought or acquired exchanges from an unaffiliated carrier before January 10, 2005, and are not subject to the exception in paragraph (c) of this section, the index year expense adjustment for acquired exchange(s) shall be equal to the rural incumbent local exchange carrier's high-cost loop expense adjustment for the acquired exchanges calculated for the carrier's first year of operation of the acquired exchange(s). At the carrier's option, the first year of operation of the transferred exchanges shall commence at the beginning of either the first calendar year or the next calendar quarter following the transfer of exchanges. The index year expense adjustment shall be determined using cost data for the acquired exchange(s) submitted in accordance with §§ 54.1305 and 54.1306 and shall be calculated in

accordance with § 54.1310. The index year expense adjustment for rural telephone companies that have operated exchanges subject to this section for more than a full year on August 8, 2014 shall be based on loop cost data submitted in accordance with § 54.1306 for the year ending on the nearest calendar quarter following August 8, 2014. For each subsequent year, ending on the same calendar quarter as the index year, a loop cost expense adjustment, using the costs of the acquired exchanges, will be calculated pursuant to § 54.1310 and will be compared to the index year expense adjustment. Safety valve support is calculated pursuant to paragraph (d)(3) of this section.

(3) Up to fifty (50) percent of any positive difference between the transferred exchanges loop cost expense adjustment and the index year expense adjustment will be designated as the transferred exchange's safety valve loop cost expense adjustment and will be available in addition to the per-line loop-related support transferred from the selling carrier to the acquiring carrier pursuant to paragraph (b) of this section. In no event shall a study area's safety valve loop cost expense adjustment exceed the difference between the carrier's study area loop cost expense adjustment calculated pursuant to § 54.1310 and transferred support amounts available to the acquired exchange(s) under paragraph (b) of this section. Safety valve support shall not transfer with acquired exchanges.

(e) The sum of the safety valve loop cost expense adjustment for all eligible study areas operated by rural telephone companies shall not exceed five (5) percent of the total rural incumbent local exchange carrier portion of the annual nationwide loop cost expense adjustment calculated pursuant to § 54.1302. The five (5) percent cap on the safety valve mechanism shall be based on the lesser of the rural incumbent local exchange carrier portion of the annual nationwide loop cost expense adjustment calculated pursuant to § 54.1302 or the sum of rural incumbent local exchange carrier expense adjustments calculated pursuant to § 54.1310. The percentage multiplier used to derive study area safety valve loop cost expense adjustments for rural telephone companies shall be the lesser of fifty (50) percent or a percentage calculated to produce the maximum total safety valve loop cost expense adjustment for all eligible study areas pursuant to this paragraph. The safety valve loop cost expense adjustment of an individual rural incumbent local exchange carrier also may be further reduced as described in paragraph (d)(3) of this section.

(f) Once an acquisition is complete, the acquiring rural incumbent local exchange carrier shall provide written notice to the Administrator that it has acquired access lines that may be eligible for safety valve support. Rural telephone companies also shall provide written notice to the Administrator defining their index year for those years after the first year of operation for purposes of calculating the safety valve loop cost expense adjustment.

[70 FR 10060, Mar. 2, 2005, as amended at 76 FR 73871, Nov. 29, 2011; 79 FR 39188, July 9, 2014]

§ 54.307 Support to a competitive eligible telecommunications carrier.

(a) *Calculation of support.* A competitive eligible telecommunications carrier shall receive universal service support to the extent that the competitive eligible telecommunications carrier captures the subscriber lines of an incumbent local exchange carrier (LEC) or serves new subscriber lines in the incumbent LEC's service area.

(1) A competitive eligible telecommunications carrier serving loops in the service area of a rural incumbent local exchange carrier, as that term is defined in § 54.5 of this chapter, shall receive support for each line it serves in a particular service area based on the support the incumbent LEC would receive for each such line, disaggregated by cost zone if disaggregation zones have been established within the service area pursuant to § 54.315 of this subpart. A competitive eligible telecommunications carrier serving loops in the service area of a non-rural incumbent local exchange carrier shall receive support for each line it serves in a particular wire center based on the support the incumbent LEC would receive for each such line. A

competitive eligible telecommunications carrier serving loops in the service area of a rate-of-return carrier shall be eligible to receive Interstate Common Line Support for each line it serves in the service area in accordance with the formula in § 54.901.

(2) A competitive eligible telecommunications carrier that uses switching purchased as unbundled network elements pursuant to § 51.307 of this chapter to provide the supported services shall receive the lesser of the unbundled network element price for switching or the per-line DEM support of the incumbent LEC, if any. A competitive eligible telecommunications carrier that uses loops purchased as unbundled network elements pursuant to § 51.307 of this chapter to provide the supported services shall receive the lesser of the unbundled network element price for the loop or the incumbent LEC's per-line payment from the high-cost loop support, LTS, and Interstate Common Line Support mechanisms, if any. The incumbent LEC providing nondiscriminatory access to unbundled network elements to such competitive eligible telecommunications carrier shall receive the difference between the level of universal service support provided to the competitive eligible telecommunications carrier and the per-customer level of support that the incumbent LEC would have received.

(3) A competitive eligible telecommunications carrier that provides the supported services using neither unbundled network elements purchased pursuant to § 51.307 of this chapter nor wholesale service purchased pursuant to section 251(c)(4) of the Act will receive the full amount of universal service support that the incumbent LEC would have received for that customer.

(b) In order to receive support pursuant to this subpart, a competitive eligible telecommunications carrier must report to the Administrator the number of working loops it serves in a service area pursuant to the schedule set forth in paragraph (c) of this section. For a competitive eligible telecommunications carrier serving loops in the service area of a rural incumbent local exchange carrier, as that term is defined in § 54.5, the carrier must report, by customer class, the number of working loops it serves in the service area, disaggregated by cost zone if disaggregation zones have been established within the service area pursuant to § 54.315. For a competitive eligible telecommunications carrier serving loops in the service area of a non-rural telephone company, the carrier must report the number of working loops it serves in the service area, by customer class if the non-rural telephone company receives Interstate Common Line Support pursuant to § 54.901 and by disaggregation zone if disaggregation zones have been established within the service area pursuant to § 54.315 of this subpart, and the number of working loops it serves in each wire center in the service area. For universal service support purposes, working loops are defined as the number of working Exchange Line C&WF loops used jointly for exchange and message telecommunications service, including C&WF subscriber lines associated with pay telephones in C&WF Category 1, but excluding WATS closed end access and TWX service. Competitive eligible telecommunications carriers providing mobile wireless service in an incumbent LEC's service area shall use the customer's billing address for purposes of identifying the service location of a mobile wireless customer in a service area.

(c) A competitive eligible telecommunications carrier must submit the data required pursuant to paragraph (b) of this section according to the schedule.

(1) No later than July 31st of each year, submit data as of December 31st of the previous calendar year;

(2) No later than September 30th of each year, submit data as of March 31st of the existing calendar year;

(3) No later than December 30th of each year, submit data as of June 30th of the existing calendar year;

(4) No later than March 30th of each year, submit data as of September 30th of the previous calendar year.

(d) *Newly designated eligible telecommunications carriers.* Notwithstanding the deadlines in paragraph (c)

of this section, a carrier shall be eligible to receive support as of the effective date of its designation as an eligible telecommunications carrier under section 214(e)(2) or (e)(6), provided that it submits the data required pursuant to paragraph (b) of this section within 60 days of that effective date. Thereafter, the eligible telecommunications carrier must submit the data required in paragraph (b) of this section pursuant to the schedule in paragraph (c) of this section.

(e) *Support Beginning January 1, 2012.* Competitive eligible telecommunications carriers will, beginning January 1, 2012, receive support based on the methodology described in this paragraph and not based on paragraph (a) of this section.

(1) *Baseline Support Amount.* Each competitive eligible telecommunication carrier will have a ''baseline support amount'' equal to its total 2011 support in a given study area, or an amount equal to $3,000 times the number of reported lines for 2011, whichever is lower. Each competitive eligible telecommunications carrier will have a ''monthly baseline support amount'' equal to its baseline support amount divided by twelve.

(i) ''Total 2011 support'' is the amount of support disbursed to a competitive eligible telecommunication carrier for 2011, without regard to prior period adjustments related to years other than 2011 and as determined by the Administrator on January 31, 2012.

(ii) For the purpose of calculating the $3,000 per line limit, the average of lines reported by a competitive eligible telecommunication carrier pursuant to line count filings required for December 31, 2010, and December 31, 2011 shall be used. The $3,000 per line limit shall be applied to support amounts determined for each incumbent study area served by the competitive eligible telecommunications carrier.

(2) *Monthly Support Amounts.* Competitive eligible telecommunications carriers shall receive the following support amounts, except as provided in paragraphs (e)(3) through (e)(6) of this section.

(i) From January 1, 2012, to June 30, 2012, each competitive eligible telecommunications carrier shall receive its monthly baseline support amount each month.

(ii) From July 1, 2012 to June 30, 2013, each competitive eligible telecommunications carrier shall receive 80 percent of its monthly baseline support amount each month.

(iii) From July 1, 2013, to June 30, 2014, each competitive eligible telecommunications carrier shall receive 60 percent of its monthly baseline support amount each month.

(iv) From July 1, 2014, to June 30, 2015, each competitive eligible telecommunications carrier shall receive 40 percent of its monthly baseline support amount each month.

(v) From July 1, 2015, to June 30, 2016, each competitive eligible telecommunications carrier shall receive 20 percent of its monthly baseline support amount each month.

(vi) Beginning July 1, 2016, no competitive eligible telecommunications carrier shall receive universal service support pursuant to this section.

(3) *Delayed Phase Down for Remote Areas in Alaska.* Certain competitive eligible telecommunications carriers serving remote areas in Alaska shall have their support phased down on a later schedule than that described in paragraph (e)(2) of this section.

(i) *Remote Areas in Alaska.* For the purpose of this paragraph, ''remote areas in Alaska'' includes all of Alaska except;

(A) The ACS-Anchorage incumbent study area;

(B) The ACS-Juneau incumbent study area;

(C) The fairbankszone1 disaggregation zone in the ACS-Fairbanks incumbent study area; and

(D) The Chugiak 1 and 2 and Eagle River 1 and 2 disaggregation zones of the Matunuska Telephone Association incumbent study area.

(ii) *Carriers Subject to Delayed Phase Down.* A competitive eligible telecommunications carrier shall be subject to the delayed phase down described in paragraph (e)(3) of this section to the extent that it serves remote areas in Alaska, and it certified that it served covered locations in its September 30, 2011, filing of line counts with the Administrator. To the extent

a competitive eligible telecommunications carrier serving Alaska is not subject to the delayed phase down, it will be subject to the phase down of support on the schedule described in paragraph (e)(2) of this section.

(iii) *Baseline for Delayed Phase Down.* For purpose of the delayed phase down for remote areas in Alaska, the baseline amount for each competitive eligible telecommunications carrier subject to the delayed phase down shall be the annualized monthly support amount received for June 2014 or the last full month prior to the implementation of Mobility Fund Phase II, whichever is later.

(iv) *Monthly Support Amounts.* Competitive eligible telecommunications carriers subject to the delayed phase down for remote areas in Alaska shall receive the following support amounts, except as provided in paragraphs (e)(4) through (e)(6) of this section.

(A) From July 1, 2014 to June 30, 2015, each competitive eligible telecommunications carrier shall receive 80 percent of its monthly baseline support amount each month.

(B) From July 1, 2015, to June 30, 2016, each competitive eligible telecommunications carrier shall receive 60 percent of its monthly baseline support amount each month.

(C) From July 1, 2016, to June 30, 2017, each competitive eligible telecommunications carrier shall receive 40 percent of its monthly baseline support amount each month.

(D) From July 1, 2017, to June 30, 2018, each competitive eligible telecommunications carrier shall receive 20 percent of its monthly baseline support amount each month.

(E) Beginning July 1, 2018, no competitive eligible telecommunications carrier serving remote areas in Alaska shall receive universal service support pursuant to this section.

(v) *Interim Support for Remote Areas in Alaska.* From January 1, 2012, until June 30, 2014 or the last full month prior to the implementation of Mobility Fund Phase II, whichever is later, competitive eligible telecommunications carriers subject to the delayed phase down for remote areas in Alaska shall continue to receive the support, as calculated by the Administrator, that each competitive telecommunications carrier would have received under the frozen per-line support amount as of December 31, 2011 capped at $3,000 per year, provided that the total amount of support for all such competitive eligible telecommunications carriers shall be capped pursuant to paragraph (e)(3)(v)(A) of this section.

(A) *Cap Amount.* The total amount of support available on an annual basis for competitive eligible telecommunications carriers subject to the delayed phase down for remote areas in Alaska shall be equal to the sum of ''total 2011 support,'' as defined in paragraph (e)(1)(i) of this section, received by all competitive eligible telecommunications carriers subject to the delayed phase down for serving remote areas in Alaska.

(B) *Reduction Factor.* To effectuate the cap, the Administrator shall apply a reduction factor as necessary to the support that would otherwise be received by all competitive eligible telecommunications carriers serving remote areas in Alaska subject to the delayed phase down. The reduction factor will be calculated by dividing the total amount of support available amount by the total support amount calculated for those carriers in the absence of the cap.

(4) *Further reductions.* If a competitive eligible telecommunications carrier ceases to provide services to high-cost areas it had previously served, the Commission may reduce its baseline support amount.

(5) *Implementation of Mobility Fund Phase II Required.* In the event that the implementation of Mobility Fund Phase II has not occurred by June 30, 2014, competitive eligible telecommunications carriers will continue to receive support at the level described in paragraph (e)(2)(iii) of this section until Mobility Fund Phase II is implemented. In the event that Mobility Fund Phase II for Tribal lands is not implemented by June 30, 2014, competitive eligible telecommunications carriers serving Tribal lands shall continue to receive support at the level described in paragraph (e)(2)(iii) of this section until Mobility Fund Phase II for Tribal lands is implemented, except

that competitive eligible telecommunications carriers serving remote areas in Alaska and subject to paragraph (e)(3) of this section shall continue to receive support at the level described in paragraph (e)(3)(v) of this section.

(6) *Eligibility after Implementation of Mobility Fund Phase II.* If a competitive eligible telecommunications carrier becomes eligible to receive high-cost support pursuant to the Mobility Fund Phase II, it will cease to be eligible for phase-down support in the first month for which it receives Mobility Fund Phase II support.

(7) *Line Count Filings.* Competitive eligible telecommunications carriers, except those subject to the delayed phase down described in paragraph (e)(3) of this section, shall no longer be required to file line counts beginning January 1, 2012. Competitive eligible telecommunications carriers subject to the delayed phase down described in paragraph (e)(3) of this section shall no longer be required to file line counts beginning July 1, 2014, or the date after the first line count filing following the implementation of Mobility Fund Phase II, whichever is later.

[62 FR 32948, June 17, 1997, as amended at 63 FR 2128, Jan. 13, 1998; 64 FR 67431, Dec. 1, 1999; 65 FR 26516, May 8, 2000; 66 FR 30087, June 5, 2001; 66 FR 59726, Nov. 30, 2001; 68 FR 31623, May 28, 2003; 69 FR 34602, June 22, 2004; 70 FR 29979, May 25, 2005; 76 FR 73871, Nov. 29, 2011; 77 FR 14302, Mar. 9, 2012; 77 FR 30913, May 24, 2012; 77 FR 52618, Aug. 30, 2012]

§ 54.309 Connect America Fund Phase II Public Interest Obligations.

(a) A price cap carrier electing Phase II model-based support is required to provide broadband service at actual speeds of at least 4 Mbps downstream/1 Mbps upstream, with latency suitable for real-time applications, including Voice over Internet Protocol, and usage capacity that is reasonably comparable to comparable offerings in urban areas, at rates that are reasonable comparable to rates for comparable offerings in urban areas.

(b) In addition, a price cap carrier electing Phase II model-based support is required to provide broadband service with actual speeds of at least 6 Mbps downstream to a specified number of locations, and upstream speeds of at least 1.5 Mbps to a specified number of locations, as determined by the Wireline Competition Bureau.

[79 FR 11335, Feb. 28, 2014]

§ 54.310 Connect America Fund for Price Cap Territories—Phase II

(a) *Geographic areas eligible for support.* Connect America Phase II support may be made available for census blocks or other areas identified as eligible by public notice, including locations identified by the forward-looking cost model as extremely high-cost. The number of supported locations will be identified for each area eligible for support will be identified by public notice.

(b) *Term of support.* Connect America Phase II model-based support shall be provided to price cap carriers that elect to make a state-wide commitment for five years. Connect America Phase II support awarded through a competitive bidding process shall be provided for ten years.

(c) *Deployment schedule.* Recipients of Phase II funding must complete deployment to 85% of supported locations within three years of notification of Phase II support authorization and to 100% of supported locations within five years of notification of Phase II support authorization. For purposes of meeting the obligation to deploy to the requisite number of supported locations, incumbent price cap carriers accepting a state-level commitment may serve locations in census blocks with costs above the extremely high-cost threshold instead of locations in eligible census blocks, provided that they meet the public interest obligations set forth in § 54.309 for those locations, and provided that the total number of locations covered is greater than or equal to the number of locations in the eligible census blocks for which the state-level commitment is made.

(d) *Disbursement of Phase II funding.* An eligible telecommunications carrier will be advised by public notice when it is authorized to receive support. The public notice will detail how disbursements will be made.

(e) *Provider eligibility.* Any eligible telecommunications carrier is eligible to receive Connect America Phase II support in eligible areas.

(1) An entity may obtain eligible telecommunications carrier designation after public notice of winning bidders in a competitive bidding process for the offer of Phase II Connect America support. An applicant in the competitive bidding process shall certify that it is financially and technically qualified to provide the services supported by Connect America Phase II in order to receive such support.

(2) To the extent an applicant in the competitive bidding process seeks eligible telecommunications carrier designation prior to public notice of winning bidders for Phase II Connect America support, its designation as an eligible telecommunications carrier may be conditional subject to the receipt of Phase II Connect America support.

(f) *Transition to model-based support.* Eligible telecommunications carriers electing model-based support in states where that support is less than their Phase I frozen support will transition to model-based support as follows: In addition to model-based support, in the first year of Phase II, they will receive 75% of the difference between Phase I frozen support and model-based support; in the second year of Phase II, they will receive 50% of the difference between Phase I frozen support and model-based support; and in the third year of Phase II, they will receive 25% of the difference between Phase I frozen support and model-based support.

[79 FR 11335, Feb. 28, 2014, as amended at 79 FR 39188, July 9, 2014]

EFFECTIVE DATE NOTE: At 79 FR 39188, July 9, 2014, § 54.310 was amended by revising paragraph (e)(1). This paragraph contains information colection and recordkeeping requirements and will not become effective until approval has been given by the Office of Management and Budget.

§ 54.312 Connect America Fund for Price Cap Territories—Phase I.

(a) *Frozen High-Cost Support.* Beginning January 1, 2012, each price cap local exchange carrier and rate-of-return carrier affiliated with a price cap local exchange carrier will have a ''baseline support amount'' equal to its total 2011 support in a given study area, or an amount equal to $3,000 times the number of reported lines for 2011, whichever is lower. For purposes of this section, price cap carriers are defined pursuant to § 61.3(aa) of this chapter and affiliated companies are determined by § 32.9000 of this chapter. Each price cap local exchange carrier and rate-of-return carrier affiliated with a price cap local exchange carrier will have a ''monthly baseline support amount'' equal to its baseline support amount divided by twelve. Beginning January 1, 2012, on a monthly basis, eligible carriers will receive their monthly baseline support amount.

(1) ''Total 2011 support'' is the amount of support disbursed to a price cap local exchange carrier or rate-of-return carrier affiliated with a price cap local exchange carrier for 2011, without regard to prior period adjustments related to years other than 2011 and as determined by USAC on January 31, 2012.

(2) For the purpose of calculating the $3,000 per line limit, the average of lines reported by a price cap local exchange carrier or rate-of-return carrier affiliated with a price cap local exchange carrier pursuant to line count filings required for December 31, 2010, and December 31, 2011 shall be used.

(3) A carrier receiving frozen high cost support under this rule shall be deemed to be receiving Interstate Access Support and Interstate Common Line Support equal to the amount of support the carrier to which the carrier was eligible under those mechanisms in 2011.

(b) *Incremental Support in 2012.* From January 1, 2012, to December 31, 2012, support in addition to baseline support defined in paragraph (a) of this section will be available for certain price cap local exchange carriers and rate-of-return carriers affiliated with price cap local exchange carriers as follows.

(1) For each carrier for which the Wireline Competition Bureau determines that it has appropriate data or for which it determines that it can make reasonable estimates, the Bureau will determine an average per-location cost for each wire center using a simplified cost-estimation function derived from the Commission's cost model. Incremental support will be based on the wire centers for which the estimated per-location cost exceeds the

funding threshold. The funding threshold will be determined by calculating which funding threshold would allocate all available incremental support, if each carrier that would be offered incremental support were to accept it.

(2) An eligible telecommunications carrier accepting incremental support must deploy broadband to a number of unserved locations, as shown as unserved by fixed broadband on the then-current version of the National Broadband Map, equal to the amount of incremental support it accepts divided by $775.

(3) A carrier may elect to accept or decline incremental support. A holding company may do so on a holding-company basis on behalf of its operating companies that are eligible telecommunications carriers, whose eligibility for incremental support, for these purposes, shall be considered on an aggregated basis. A carrier must provide notice to the Commission, relevant state commissions, and any affected Tribal government, stating the amount of incremental support it wishes to accept and identifying the areas by wire center and census block in which the designated eligible telecommunications carrier will deploy broadband to meet its deployment obligation, or stating that it declines incremental support. Such notification must be made within 90 days of being notified of any incremental support for which it would be eligible. Along with its notification, a carrier accepting incremental support must also submit a certification that the locations to be served to satisfy the deployment obligation are not shown as served by fixed broadband provided by any entity other than the certifying entity or its affiliate on the then-current version of the National Broadband Map; that, to the best of the carrier's knowledge, the locations are, in fact, unserved by fixed broadband; that the carrier's current capital improvement plan did not already include plans to complete broadband deployment within the next three years to the locations to be counted to satisfy the deployment obligation; and that incremental support will not be used to satisfy any merger commitment or similar regulatory obligation. If a carrier intends to deploy to census blocks not initially identified at the time of election, it must inform the Commission, the Administrator, relevant state commissions, and any affected Tribal government of the change at least 90 days prior to commencing deployment in the new census blocks. No sooner than 46 days after the Wireline Competition Bureau issues a public notice announcing the updated deployment plans but prior to commencing deployment, the carrier must make the certifications described in this paragraph with respect to the new census blocks. If a carrier no longer intends to deploy to a previously identified census block, it must inform the Commission, the Administrator, relevant state commission, and any affected Tribal government prior to filing its certification pursuant to § 54.313(b)(2).

(c) *Incremental Support in 2013.* From January 1, 2013, to December 31, 2013, support in addition to baseline support defined in paragraph (a) of this section will be available for certain price cap local exchange carriers and rate-of-return carriers affiliated with price cap local exchange carriers as follows:

(1) For each carrier for which the Wireline Competition Bureau determines that it has appropriate data or for which it determines that it can make reasonable estimates, the Bureau will determine an average per-location cost for each wire center using a simplified cost-estimation function derived from the Commission's high-cost proxy model. Incremental support will be based on the wire centers for which the estimated per-location cost exceeds the funding threshold. The funding threshold will be determined by calculating which funding threshold would allocate all available incremental support, if each carrier that would be offered incremental support were to accept it.

(2) An eligible telecommunications carrier accepting incremental support must deploy broadband to a number of unserved locations, shown as unserved by fixed Internet access with speeds of at least 768 kbps downstream and 200 kbps upstream on the then-current version of the National Broadband Map, equal to the amount of incremental support it accepts divided by $775.

(3) An eligible telecommunications carrier must accept funding pursuant to paragraph (c)(2) of this section before it may accept funding pursuant to paragraph (c)(3) of this section. If an eligible telecommunications carrier has committed to deploy to all locations eligible for support under paragraph

(c)(2) of this section on routes or projects that can economically be built with $775 in Connect America funding for each location unserved by 768 kbps downstream and 200 kbps upstream plus an equal amount of non-Connect America carrier capital expenditure funding, but the carrier has not fully utilized its allotted funding, it may also count towards its deployment obligation locations shown as unserved by fixed Internet access with speeds of at least 3 Mbps downstream and 768 kbps upstream equal to the amount of remaining incremental support divided by $550.

(4) A carrier may elect to accept or decline incremental support. A holding company may do so on a holding-company basis on behalf of its operating companies that are eligible telecommunications carriers, whose eligibility for incremental support, for these purposes, shall be considered on an aggregated basis. A carrier must provide notice to the Commission, the Administrator, relevant state commissions, and any affected Tribal government, stating the amount of incremental support it wishes to accept, the number of locations at the $775 amount, and the number of locations at the $550 amount, and identifying the areas by wire center and census block in which the designated eligible telecommunications carrier will deploy broadband to meet its deployment obligation; or stating that it declines incremental support. Such notification must be made within 75 days of being notified of any incremental support for which it would be eligible. If a carrier intends to deploy to census blocks not initially identified at the time of election, it must inform the Commission, the Administrator, relevant state commissions, and any affected Tribal government of the change at least 90 days prior to commencing deployment in the new census blocks. No sooner than 46 days after the Wireline Competition Bureau issues a public notice announcing the updated deployment plans but prior to commencing deployment, the carrier must make the certifications described in paragraph (c)(5) of this section with respect to the new census blocks. If a carrier no longer intends to deploy to a previously identified census block, it must inform the Commission, the Administrator, relevant state commission, and any affected Tribal government prior to filing its certification pursuant to § 54.313(b)(2).

(5) Along with its notification, an eligible telecommunications carrier accepting incremental support must submit the following certifications:

(i) The locations to be served to satisfy the deployment obligation are not shown as served by fixed broadband at the speeds specified in paragraph (c)(2) or (c)(3) of this section provided by any entity other than the certifying entity or its affiliate on the then-current version of the National Broadband Map or that it is challenging the National Broadband Map's designation of that census block under the challenge process in paragraph (c)(7) of this section;

(ii) To the best of the carrier's knowledge, the locations are, in fact, unserved by fixed Internet access with speeds of at least 3 Mbps downstream and 768 kbps upstream, or 768 kbps downstream and 200 kbps upstream, as appropriate;

(iii) The carrier's current capital improvement plan did not already include plans to complete broadband deployment within the next three years to the locations to be counted to satisfy the deployment obligation;

(iv) Incremental support will not be used to satisfy any merger commitment or similar regulatory obligation; and

(v) The carrier has undertaken due diligence to determine the locations in question are not within the service area of either Broadband Initiatives Program or the Broadband Technology Opportunities Program projects that will provide Internet access with speeds of at least 3 Mbps downstream and 768 upstream.

(6) An eligible telecommunications carrier deploying to locations unserved by 3 Mbps downstream and 768 kbps upstream under paragraph (c)(3) of this section must also certify that it has prioritized its planned projects or routes so as to maximize the deployment of broadband-capable infrastructure to locations lacking Internet access with speeds of 768 kbps downstream and 200 kbps upstream.

(7) A person may challenge the designation of a census block as served or unserved by a certain speed as shown on the National Broadband Map. When the Wireline Competition Bureau determines that the evidence presented makes it more likely than not that the census block should be designated as served by broadband with speeds of at least 3 Mbps downstream and 768 kbps upstream, that locations in that census block will be treated as served by broadband and therefore ineligible to be counted for the purposes of paragraph (c)(3) of this section. When the Wireline Competition Bureau determines that the evidence presented makes it more likely than not that the census block should be designated as served by Internet service with speeds of 768 kbps downstream and 200 kbps upstream, but unserved by broadband with speeds of at least 3 Mbps downstream and 768 kbps upstream, locations in that census block will be treated as served by Internet access with speeds of 768 kbps downstream and 200 kbps upstream and therefore eligible to be counted for the purposes of paragraph (c)(3) of this section. When the Wireline Competition Bureau determines that the evidence presented makes it more likely than not that the census block should be designated as unserved by Internet

service with speeds of 768 kbps downstream and 200 kbps upstream, locations in that census block will be treated as unserved by Internet access with speeds of 768 kbps downstream and 200 kbps upstream and therefore eligible to be counted for the purposes of paragraph (c)(2) of this section.

(8) If no entity other than the carrier or its affiliate provides Internet service with speeds of 3 Mbps downstream and 768 kbps upstream or greater as shown on the National Broadband Map or as determined by the process described in paragraph (c)(7), the carrier may satisfy its deployment obligations at a location shown by the National Broadband Map as being served by that carrier or its affiliate with such service by certifying that it is the only entity providing such service, that the location does not actually receive speeds of 3 Mbps downstream and 768 kbps upstream, and the location is served through a copper-fed digital subscriber line access multiplexer. The carrier must specifically identify such locations in its election. Such locations will be treated the same as locations under paragraph (c)(3) of this section.

(9) An eligible telecommunications carrier must complete deployment of broadband-capable infrastructure to two-thirds of the required number of locations within two years of providing notification of acceptance of funding, and must complete deployment to all required locations within three years. To satisfy its deployment obligation, the eligible telecommunications carrier must offer broadband service to such locations of at least 4 Mbps downstream and 1 Mbps upstream, with latency sufficiently low to enable the use of real-time communications, including Voice over Internet Protocol, and with usage allowances, if any, associated with a specified price for a service offering that are reasonably comparable to comparable offerings in urban areas.

[76 FR 73872, Nov. 29, 2011, as amended at 77 FR 31536, May 29, 2012; 78 FR 38233, June 26, 2013; 78 FR 48624, Aug. 9, 2013]

EFFECTIVE DATE NOTE: At 78 FR 48624, Aug. 9, 2013, § 54.312 was amended by revising paragraphs and (c)(4). These paragraph contain information collection and recordkeeping requirements and will not become effective until approval has been given by the Office of Management and Budget.

§ 54.313 Annual reporting requirements for high-cost recipients.

(a) Any recipient of high-cost support shall provide the following, with the information and data required by paragraphs (a)(1) through (7) of this section separately broken out for both voice service and broadband service:

(1) A progress report on its five-year service quality improvement plan pursuant to § 54.202(a), including maps detailing its progress towards meeting its plan targets, an explanation of how much universal service support was received and how it was used to improve service quality, coverage, or capacity, and an explanation regarding any network improvement targets that have not been fulfilled in the prior calendar year. The information shall be submitted at the wire center level or census block as appropriate;

(2) Detailed information on any outage in the prior calendar year, as that term is defined in 47 CFR 4.5, of at least 30 minutes in duration for each service area in which an eligible telecommunications carrier is designated for any facilities it owns, operates, leases, or otherwise utilizes that potentially affect

(i) At least ten percent of the end users served in a designated service area; or

(ii) A 911 special facility, as defined in 47 CFR 4.5(e).

(iii) Specifically, the eligible telecommunications carrier's annual report must include information detailing:

(A) The date and time of onset of the outage;

(B) A brief description of the outage and its resolution;

(C) The particular services affected;

(D) The geographic areas affected by the outage;

(E) Steps taken to prevent a similar situation in the future; and

(F) The number of customers affected.

(3) The number of requests for service from potential customers within the recipient's service areas that were unfulfilled during the prior calendar year. The carrier shall also detail how it attempted to provide service to those potential customers;

(4) The number of complaints per 1,000 connections (fixed or mobile) in the prior calendar year;

(5) Certification that it is complying with applicable service quality standards and consumer protection rules;

(6) Certification that the carrier is able to function in emergency situations as set forth in § 54.202(a)(2);

(7) The company's price offerings in a format as specified by the Wireline Competition Bureau;

(8) The recipient's holding company, operating companies, affiliates, and any branding (a ''dba,'' or ''doing-business-as company'' or brand designation), as well as universal service identifiers for each such entity by Study Area Codes, as that term is used by the Administrator. For purposes of this paragraph, ''affiliates'' has the meaning set forth in section 3(2) of the Communications Act of 1934, as amended;

(9) *Beginning July 1, 2013.* To the extent the recipient serves Tribal lands, documents or information demonstrating that the ETC had discussions with Tribal governments that, at a minimum, included:

(i) A needs assessment and deployment planning with a focus on Tribal community anchor institutions;

(ii) Feasibility and sustainability planning;

(iii) Marketing services in a culturally sensitive manner;

(iv) Rights of way processes, land use permitting, facilities siting, environmental and cultural preservation review processes; and

(v) Compliance with Tribal business and licensing requirements. Tribal business and licensing requirements include business practice licenses that Tribal and non-Tribal business entities, whether located on or off Tribal lands, must obtain upon application to the relevant Tribal government office or division to conduct any business or trade, or deliver any goods or services to the Tribes, Tribal members, or Tribal lands. These include certificates of public convenience and necessity, Tribal business licenses, master licenses, and other related forms of Tribal government licensure.

(10) *Beginning July 1, 2013.* A letter certifying that the pricing of the company's voice services is no more than two standard deviations above the applicable national average urban rate for voice service, as specified in the most recent public notice issued by the Wireline Competition Bureau and Wireless Telecommunications Bureau; and

(11) *Beginning July 1, 2013.* The results of network performance tests pursuant to the methodology and in the format determined by the Wireline Competition Bureau, Wireless Telecommunications Bureau, and Office of Engineering and Technology.

(b) In addition to the information and certifications in paragraph (a) of this section:

(1) Any recipient of incremental Connect America Phase I support pursuant to § 54.312(b) and (c) shall provide:

(i) In its next annual report due after two years after filing a notice of acceptance of funding pursuant to § 54.312(b) and (c), a certification that the company has deployed to no fewer than two-thirds of the required number of locations; and

(ii) In its next annual report due after three years after filing a notice of acceptance of funding pursuant to § 54.312(b) and (c), a certification that the company has deployed to all required locations and that it is offering broadband service of at least 4 Mbps downstream and 1 Mbps upstream, with latency sufficiently low to enable the use of real-time communications, including Voice over Internet Protocol, and with usage allowances, if any, associated with a specified price for a service offering that are reasonably comparable to comparable offerings in urban areas.

(2) In addition to the information and certifications required in paragraph (b)(1) of this section, any recipient of incremental Connect America Phase I support pursuant to § 54.312(c) shall provide:

(i) In its annual reports due after one, two, and three years after filing a notice of acceptance of funding pursuant to § 54.312(c), a certification that, to the best of the recipient's knowledge, the locations in question are not receiving support under the Broadband Initiatives Program or the Broadband Technology Opportunities Program for projects that will provide broadband with speeds of at least 4 Mbps/1 Mbps; and

(ii) In its annual reports due after one, two, and three years after filing a notice of acceptance of funding pursuant to § 54.312(c), a statement of the total amount of capital funding expended in the previous year in meeting Connect America Phase I deployment obligations, accompanied by a list of census blocks indicating where funding was spent.

(c) In addition to the information and certifications in paragraph (a) of this section, price cap carriers that receive frozen high-cost support pursuant to § 54.312(a) shall provide:

(1) *By July 1, 2013.* A certification that frozen high-cost support the company received in 2012 was used consistent with the goal of achieving universal availability of voice and broadband;

(2) *By July 1, 2014.* A certification that at least one-third of the frozen-high cost support the company received in 2013 was used to build and operate broadband-capable networks used to offer the provider's own retail broadband service in areas substantially unserved by an unsubsidized competitor;

(3) *By July 1, 2015.* A certification that at least two-thirds of the frozen-high cost support the company received in 2014 was used to build and operate broadband-capable networks used to offer the provider's own retail broadband service in areas substantially unserved by an unsubsidized competitor; and

(4) *By July 1, 2016 and in subsequent years.* A certification that all frozen-high cost support the company received in the previous year was used to build and operate broadband-capable networks used to offer the provider's own retail broadband service in areas substantially unserved by an unsubsidized competitor.

(d) In addition to the information and certifications in paragraph (a) of this section, beginning July 1, 2013, price cap carriers receiving high-cost support to offset reductions in access charges shall provide a certification that the support received pursuant to § 54.304 in the prior calendar year was used to build and operate broadband-capable networks used to offer provider's own retail service in areas substantially unserved by an unsubsidized competitor.

(e) In addition to the information and certifications in paragraph (a) of this section, any recipient of CAF Phase II support shall provide:

(1) *In the calendar year no later than three years after notification of authorization of CAF Phase II funding,* a certification that the recipient is providing broadband meeting the requisite public interest obligations specified in § 54.309 to 85% of its supported locations.

(2) *In the calendar year no later than five years after notification of authorization of CAF Phase II funding,* a certification that the recipient is providing broadband meeting the requisite public interest obligations specified in § 54.309 to 100% of its supported locations.

(3) *In the calendar year after the filing of its initial five-year service quality improvement plan, and every year thereafter,* a progress report on the company's five-year service quality improvement plan, including the following information:

(i) A letter certifying that it is meeting the interim deployment milestones as set forth, and that it is taking reasonable steps to meet increased speed obligations that will exist for all supported locations at the expiration of the five-year term for CAF Phase II funding; and

(ii) The number, names, and addresses of community anchor institutions to which the ETC newly began providing access to broadband service in the preceding calendar year.

(f) In addition to the information and certifications in paragraph (a) of this section, any rate-of-return carrier shall provide:

(1) *Beginning July 1, 2015.* A progress report on its five-year service quality plan pursuant to § 54.202(a) that includes the following information:

(i) A letter certifying that it is taking reasonable steps to provide upon reasonable request broadband service at actual speeds of at least 4 Mbps downstream/1 Mbps upstream, with latency suitable for real-time applications, including Voice over Internet Protocol, and usage capacity that is reasonably comparable to comparable offerings in urban areas as determined in an annual survey, and that requests for such service are met within a reasonable amount of time; and

(ii) The number, names, and addresses of community anchor institutions to which the ETC newly began providing access to broadband service in the preceding calendar year.

(2) *Privately held rate-of-return carriers only.* A full and complete annual report of the company's financial condition and operations as of the end of the preceding fiscal year.

(i) Recipients of loans from the Rural Utility Service (RUS) shall provide copies of their RUS Operating Report for Telecommunications Borrowers as filed with the RUS. Such carriers must make their underlying audit and related workpapers and financial information available upon request by the Commission, USAC, or the relevant state commission, relevant authority in a U.S. Territory, or Tribal government, as appropriate.

(ii) All privately held rate-of-return carriers that are not recipients of loans from the RUS and whose financial statements are audited in the ordinary course of business must provide either: A copy of their audited financial statement; or a financial report in a format comparable to RUS Operating Report for Telecommunications Borrowers, accompanied by a copy of a management letter issued by the independent certified public accountant that performed the company's financial audit. A carrier choosing the latter option must make its audit and related workpapers and financial information available upon request by the Commission, USAC, or the relevant state commission, relevant authority in a U.S. Territory, or Tribal government, as appropriate.

(iii) All other privately held rate-of-return carriers must provide either: A copy of their financial statement which has been subject to review by an independent certified public accountant; or a financial report in a format comparable to RUS Operating Report for Telecommunications Borrowers, with the underlying information subjected to a review by an independent certified public accountant and accompanied by an officer certification that: The carrier was not audited in the ordinary course of business for the preceding fiscal year; and that the reported data are accurate. If the carrier elects the second option, it must make the review and related workpapers and financial information available upon request by the Commission, USAC, or the relevant state commission, relevant authority in a U.S. Territory, or Tribal government, as appropriate.

(g) *Areas with No Terrestrial Backhaul.* Carriers without access to terrestrial backhaul that are compelled to rely exclusively on satellite backhaul in their study area must certify annually that no terrestrial backhaul options exist. Any such funding recipients must certify they offer broadband service at actual speeds of at least 1 Mbps downstream and 256 kbps upstream within the supported area served by satellite middle-mile facilities. To the extent that new terrestrial backhaul facilities are constructed, or existing facilities improve sufficiently to meet the relevant speed, latency and capacity requirements then in effect for broadband service supported by the CAF, within twelve months of the new backhaul facilities becoming commercially available, funding recipients must provide the certifications required in paragraphs (e) or (f) of this section in full. Carriers subject to this paragraph must comply with all other requirements set forth in the remaining paragraphs of this section.

(h) *Additional voice rate data.* (1) All incumbent local exchange carrier recipients of high-cost support must report all of their rates for residential local service for all portions of their service area, as well as state fees as defined pursuant to § 54.318(e), to the extent the sum of those rates and fees are below the rate floor as defined in § 54.318, and the number of lines for each rate specified. Carriers shall report lines and rates in effect as of June 1.

(2) In addition to the annual filing, local exchange carriers may file updates of their rates for residential local service, as well as state fees as defined pursuant to § 54.318(e), on January 2 of each year. If a local exchange carrier reduces its rates and the sum of the reduced rates and state fees are below the rate floor as defined in § 54.318, the local exchange carrier shall file such an update. For the update, carriers shall report lines and rates in effect as of December 1.

(i) All reports pursuant to this section shall be filed with the Office of the Secretary of the Commission clearly referencing WC Docket No. 14–58, with the Administrator, and with the relevant state commissions or relevant authority in a U.S. Territory, or Tribal governments, as appropriate.

(j) *Filing deadlines.* In order for a recipient of high-cost support to continue to receive support for the following calendar year, or retain its eligible telecommunications carrier designation, it must submit the annual reporting information required by this section no later than July 1, 2012, except as otherwise specified in this section to begin in a subsequent year, and thereafter annually by July 1 of each year. Eligible telecommunications carriers that file their reports after the July 1 deadline shall receive support pursuant to the following schedule:

(1) Eligible telecommunication carriers that file no later than October 1 shall receive support for the second, third and fourth quarters of the subsequent year.

(2) Eligible telecommunication carriers that file no later than January 1 of the subsequent year shall receive support for the third and fourth quarters of the subsequent year.

(3) Eligible telecommunication carriers that file no later than April 1 of the subsequent year shall receive support for the fourth quarter of the subsequent year.

(k) This section does not apply to recipients that solely receive support from the Phase I Mobility Fund.

[76 FR 73873, Nov. 29, 2011, as amended at 77 FR 14302, Mar. 9, 2012; 77 FR 30914, May 24, 2012; 78 FR 22201, Apr. 15, 2013; 78 FR 29656, May 21, 2013; 78 FR 3843, Jan. 17, 2013; 78 FR 38233, June 26, 2013; 79 FR 11336, Feb. 28, 2014; 79 FR 39189, July 9, 2014]

EFFECTIVE DATE NOTES: 1. At 77 FR 14302, Mar. 9, 2012, § 54.313 was amended by revising paragraphs (a)(9) introductory text and (f)(2). These paragraphs contain information collection and recordkeeping requirements and will not become effective until approval has been given by the Office of Management and Budget.

2. At 79 FR 11336, Feb. 28, 2014, § 54.313 was amended by revising paragraphs (e)(1), (e)(2) and (e)(3) introductory text. These paragraphs contain information collection and recordkeeping requirements and will not become effective until approval has been given by the Office of Management and Budget.

§ 54.314 Certification of support for eligible telecommunications carriers.

(a) *Certification.* States that desire eligible telecommunications carriers to receive support pursuant to the high-cost program must file an annual certification with the Administrator and the Commission stating that all federal high-cost support provided to such carriers within that State was used in the preceding calendar year and will be used in the coming calendar year only for the provision, maintenance, and upgrading of facilities and services for which the support is intended. High-cost support shall only be provided to the extent that the State has filed the requisite certification pursuant to this section.

(b) *Carriers not subject to State jurisdiction.* An eligible telecommunications carrier not subject to the jurisdiction of a State that desires to receive support pursuant to the high-cost program must file an annual certification with the Administrator and the Commission stating that all federal high-cost support provided to such carrier was used in the preceding calendar year and will be used in the coming calendar year only for the provision, maintenance, and upgrading of facilities and services for which the support is intended. Support provided pursuant to the high-cost program shall only be provided to the extent that the carrier has filed the requisite certification pursuant to this section.

(c) *Certification format.* (1) A certification pursuant to this section may be filed in the form of a letter from the appropriate regulatory authority for the State, and must be filed with both the Office of the Secretary of the Commission clearly referencing WC Docket No. 14–58, and with the Administrator of the high-cost support mechanism, on or before the deadlines set forth in paragraph (d) of this section. If provided by the appropriate regulatory authority for the State, the annual certification must identify which carriers in the State are eligible to receive federal support during the applicable 12-month period, and must certify that those carriers only used support during the preceding calendar year and will only use support in the coming calendar year for the provision, maintenance, and upgrading of facilities and services for which support is intended. A State may file a supplemental certification for carriers not subject to the State's annual certification. All certificates filed by a State pursuant

to this section shall become part of the public record maintained by the Commission.

(2) An eligible telecommunications carrier not subject to the jurisdiction of a State shall file a sworn affidavit executed by a corporate officer attesting that the carrier only used support during the preceding calendar year and will only use support in the coming calendar year for the provision, maintenance, and upgrading of facilities and services for which support is intended. The affidavit must be filed with both the Office of the Secretary of the Commission clearly referencing WC Docket No. 14–58, and with the Administrator of the high-cost universal service support mechanism, on or before the deadlines set forth in paragraph (d) of this section. All affidavits filed pursuant to this section shall become part of the public record maintained by the Commission.

(d) *Filing deadlines.* In order for an eligible telecommunications carrier to receive federal high-cost support, the State or the carrier, if not subject to the jurisdiction of a State, must file an annual certification, as described in paragraph (c) of this section, with both the Administrator and the Commission. Upon the filing of the certification described in this section, support shall be provided in accordance with the following schedule:

(1) *Certifications filed on or before October 1.* Carriers subject to certifications filed on or before October 1 shall receive support in the first, second, third, and fourth quarters of the succeeding year.

(2) *Certifications filed on or before January 1.* Carriers subject to certifications filed on or before January 1 shall receive support in the second, third, and fourth quarters of that year. Such carriers shall not receive support in the first quarter of that year.

(3) *Certifications filed on or before April 1.* Carriers subject to certifications filed on or before April 1 shall receive support in the third and fourth quarters of that year. Such carriers shall not receive support in the first or second quarters of that year.

(4) *Certifications filed on or before July 1.* Carriers subject to certifications filed on or before July 1 shall receive support beginning in the fourth quarter of that year. Such carriers shall not receive support in the first, second, or third quarters of that year.

(5) Certifications filed after July 1. Carriers subject to certifications filed after July 1 shall not receive support in that year.

(6) *Newly designated eligible telecommunications carriers.* Notwithstanding the deadlines in paragraph (d) of this section, a carrier shall be eligible to receive support as of the effective date of its designation as an eligible telecommunications carrier under section 214(e)(2) or (e)(6) of the Act, provided that it files the certification described in paragraph (b) of this section or the state commission files the certification described in paragraph (a) of this section within 60 days of the effective date of the carrier's designation as an eligible telecommunications carrier. Thereafter, the certification required by paragraphs (a) or (b) of this section must be submitted pursuant to the schedule in paragraph (d) of this section.

[76 FR 73875, Nov. 29, 2011; 79 FR 39189, July 9, 2014]

§ 54.318 High-cost support; limitations on high-cost support.

(a) Beginning July 1, 2012, each carrier receiving high-cost support in a study area under this subpart will receive the full amount of high-cost support it otherwise would be entitled to receive if its rates for residential local service plus state regulated fees as defined in paragraph (e) of this section exceed a local urban rate floor representing the national average of local urban rates plus state regulated fees under the schedule specified in paragraph (f) of this section.

(b) Carriers whose rates for residential local service plus state regulated fees offered for voice service are below the specified local urban rate floor under the schedule below plus state regulated fees shall have high-cost support reduced by an amount equal to the extent to which its rates for residential local service plus state regulated fees are below the local urban rate floor, multiplied by the number of lines for which it is receiving support.

(c) This rule will apply only to rate-of-return carriers as defined in § 54.5 and carriers subject to price cap regulation as that term is defined in § 61.3 of this chapter.

(d) For purposes of this section, high-cost support is defined as the support available pursuant to § 54.1310 and frozen high-cost support provided to price cap carriers to the extent it is based on support previously provided pursuant to § 54.1310 or former high-cost proxy model support.

(e) *State regulated fees.* (1) Beginning on July 1, 2012, for purposes of calculating limitations on high-cost support under this section, state regulated fees shall be limited to state subscriber line charges, state universal service fees and mandatory extended area service charges, which shall be determined as part of a local rate survey, the results of which shall be published annually.

(2) Federal subscriber line charges shall not be included in calculating limitations on high-cost support under this section.

(f) *Schedule.* High-cost support will be limited where the rate for residential local service plus state regulated fees are below the local urban rate floor representing the national average of local urban rates plus state regulated fees under the schedule specified in this paragraph. To the extent end user rates plus state regulated fees are below local urban rate floors plus state regulated fees, appropriate reductions in high-cost support will be made by the Universal Service Administrative Company.

(g) Any reductions in high-cost support under this section will not be redistributed to other carriers that receive support pursuant to § 54.1310.

(h) If, due to changes in local service rates, a local exchange carrier makes an updated rate filing pursuant to section 54.313(h)(2), the Universal Service Administrative Company will update the support reduction applied pursuant to paragraphs (b) and (f) of this section.

(i) For the purposes of this section and the reporting of rates pursuant to paragraph 313(h), rates for residential local service provided pursuant to measured or message rate plans or as part of a bundle of services should be calculated as follows:

(1) Rates for measured or message service shall be calculated by adding the basic rate for local service plus the additional charges incurred for measured service, using the mean number of minutes or message units for all customers subscribing to that rate plan multiplied by the applicable rate per minute or message unit. The local service rate includes additional charges for measured service only to the extent that the average number of units used by subscribers to that rate plan exceeds the number of units that are included in the plan. Where measured service plans have multiple rates for additional units, such as peak and off-peak rates, the calculation should reflect the average number of units that subscribers to the rate plan pay at each rate.

(2) For bundled service, the residential local service rate is the local service rate as tariffed, if applicable, or as itemized on end-user bills. If a carrier neither tariffs nor itemizes the local voice service rate on bills for bundled services, the local service rate is the rate of a similar stand-alone local voice service that it offers to consumers in that study area.

[76 FR 73876, Nov. 29, 2011, as amended at 77 FR 14302, Mar. 9, 2012; 77 FR 30914, May 24, 2012; 79 FR 39190, July 9, 2014]

§ 54.319 Elimination of high-cost support in areas with 100 percent coverage by an unsubsidized competitor.

(a) Universal service support shall be eliminated in an incumbent local exchange carrier study area where an unsubsidized competitor, or combination of unsubsidized competitors, as defined in § 54.5, offers to 100 percent of residential and business locations in the study area voice and broadband service at speeds of at least 4 Mbps downstream/1 Mbps upstream, with latency suitable for real-time applications, including Voice over Internet Protocol, and usage capacity that is reasonably comparable to comparable offerings in urban areas, at rates that are reasonably comparable to rates for comparable offerings in urban areas.

(b) After a determination there is a 100 percent overlap, the incumbent

local exchange carrier shall receive the following amount of high-cost support:

(1) In the first year, two-thirds of the lesser of the incumbent's total 2010 high-cost support or $3000 times the number of reported lines as of year-end 2010;

(2) In the second year, one-third of the lesser of the incumbent's total 2010 high-cost support or $3000 times the number of reported lines as of year-end 2010;

(3) In the third year and thereafter, no support shall be paid.

[79 FR 39190, July 9, 2014]

§ 54.320 Compliance and recordkeeping for the high-cost program.

(a) Eligible telecommunications carriers authorized to receive universal service high-cost support are subject to random compliance audits and other investigations to ensure compliance with program rules and orders.

(b) All eligible telecommunications carriers shall retain all records required to demonstrate to auditors that the support received was consistent with the universal service high-cost program rules. This documentation must be maintained for at least ten years from the receipt of funding. All such documents shall be made available upon request to the Commission and any of its Bureaus or Offices, the Administrator, and their respective auditors.

(c) Eligible telecommunications carriers authorized to receive high-cost support that fail to comply with public interest obligations or any other terms and conditions may be subject to further action, including the Commission's existing enforcement procedures and penalties, reductions in support amounts, potential revocation of ETC designation, and suspension or debarment pursuant to § 54.8.

[76 FR 73876, Nov. 29, 2011]

Subpart E—Universal Service Support for Low-Income Consumers

54.400 Terms and definitions.

As used in this subpart, the following terms shall be defined as follows:

(a) *Qualifying low-income consumer.* A ''qualifying low-income consumer'' is a consumer who meets the qualifications for Lifeline, as specified in § 54.409.

(b) *Toll blocking service.* ''Toll blocking service'' is a service provided by an eligible telecommunications carrier that lets subscribers elect not to allow the completion of outgoing toll calls from their telecommunications channel.

(c) *Toll control service.* ''Toll control service'' is a service provided by an eligible telecommunications carrier that allows subscribers to specify a certain amount of toll usage that may be incurred on their telecommunications channel per month or per billing cycle.

(d) *Toll limitation service.* ''Toll limitation service'' denotes either toll blocking service or toll control service for eligible telecommunications carriers that are incapable of providing both services. For eligible telecommunications carriers that are capable of providing both services, ''toll limitation service'' denotes both toll blocking service and toll control service.

(e) *Eligible resident of Tribal lands.* An ''eligible resident of Tribal lands'' is a ''qualifying low-income consumer,'' as defined in paragraph (a) of this section, living on Tribal lands. For purposes of this subpart, ''Tribal lands'' include any federally recognized Indian tribe's reservation, pueblo, or colony, including former reservations in Oklahoma; Alaska Native regions established pursuant to the Alaska Native Claims Settlement Act (85 Stat. 688); Indian allotments; Hawaiian Home Lands—areas held in trust for Native Hawaiians by the state of Hawaii, pursuant to the Hawaiian Homes Commission Act, 1920 July 9, 1921, 42 Stat. 108, *et. seq.*, as amended; and any land designated as such by the Commission for purposes of this subpart pursuant to the designation process in § 54.412.

(f) *Income.* ''Income'' is all income actually received by all members of a household. This includes salary before deductions for taxes, public assistance benefits, social security payments, pensions, unemployment compensation, veteran's benefits, inheritances, alimony, child support payments, worker's compensation benefits, gifts, lottery winnings, and the like. The

only exceptions are student financial aid, military housing and cost-of-living allowances, irregular income from occasional small jobs such as baby-sitting or lawn mowing, and the like.

(g) *Duplicative support.* ''Duplicative support'' exists when a Lifeline subscriber is receiving two or more Lifeline services concurrently or two or more subscribers in a household are receiving Lifeline services or Tribal Link Up support concurrently.

(h) *Household.* A ''household'' is any individual or group of individuals who are living together at the same address as one economic unit. A household may include related and unrelated persons. An ''economic unit'' consists of all adult individuals contributing to and sharing in the income and expenses of a household. An adult is any person eighteen years or older. If an adult has no or minimal income, and lives with someone who provides financial support to him/her, both people shall be considered part of the same household. Children under the age of eighteen living with their parents or guardians are considered to be part of the same household as their parents or guardians.

(i) *National Lifeline Accountability Database or Database.* The ''National Lifeline Accountability Database'' or ''Database'' is an electronic system, with associated functions, processes, policies and procedures, to facilitate the detection and elimination of duplicative support, as directed by the Commission.

(j) *Qualifying assistance program.* A ''qualifying assistance program'' means any of the federal, state, or Tribal assistance programs participation in which, pursuant to § 54.409(a) or (b), qualifies a consumer for Lifeline service, including Medicaid; Supplemental Nutrition Assistance Program; Supplemental Security Income; Federal Public Housing Assistance (Section 8); Low-Income Home Energy Assistance Program; National School Lunch Program's free lunch program; Temporary Assistance for Needy Families; Bureau of Indian Affairs general assistance; Tribally administered Temporary Assistance for Needy Families (Tribal TANF); Head Start (only those households meeting its income qualifying standard); or the Food Distribution Program on Indian Reservations (FDPIR), and with respect to the residents of any particular state, any other program so designated by that state pursuant to § 54.409(a).

[77 FR 12966, Mar. 2, 2012]

§ 54.401 Lifeline defined.

(a) As used in this subpart, Lifeline means a non-transferable retail service offering:

(1) For which qualifying low-income consumers pay reduced charges as a result of application of the Lifeline support amount described in § 54.403; and

(2) That provides qualifying low-income consumers with voice telephony service as specified in § 54.101(a). Toll limitation service does not need to be offered for any Lifeline service that does not distinguish between toll and non-toll calls in the pricing of the service. If an eligible telecommunications carrier charges Lifeline subscribers a fee for toll calls that is in addition to the per month or per billing cycle price of the subscribers' Lifeline service, the carrier must offer toll limitation service at no charge to its subscribers as part of its Lifeline service offering.

(b) Eligible telecommunications carriers may allow qualifying low-income consumers to apply Lifeline discounts to any residential service plan that includes voice telephony service, including bundled packages of voice and data services; and plans that include optional calling features such as, but not limited to, caller identification, call waiting, voicemail, and three-way calling. Eligible telecommunications carriers may also permit qualifying low-income consumers to apply their Lifeline discount to family shared calling plans.

(c) Eligible telecommunications carriers may not collect a service deposit in order to initiate Lifeline service for plans that:

(1) Do not charge subscribers additional fees for toll calls; or

(2) That charge additional fees for toll calls, but the subscriber voluntarily elects toll limitation service.

(d) When an eligible telecommunications carrier is designated by a state commission, the state commission

shall file or require the eligible telecommunications carrier to file information with the Administrator demonstrating that the carrier's Lifeline plan meets the criteria set forth in this subpart and describing the terms and conditions of any voice telephony service plans offered to Lifeline subscribers, including details on the number of minutes provided as part of the plan, additional charges, if any, for toll calls, and rates for each such plan. To the extent the eligible telecommunications carrier offers plans to Lifeline subscribers that are generally available to the public, it may provide summary information regarding such plans, such as a link to a public Web site outlining the terms and conditions of such plans. Lifeline assistance shall be made available to qualifying low-income consumers as soon as the Administrator certifies that the carrier's Lifeline plan satisfies the criteria set out in this subpart.

(e) Consistent with § 52.33(a)(1)(i)(C) of this chapter, eligible telecommunications carriers may not charge Lifeline customers a monthly number-portability charge.

[77 FR 12967, Mar. 2, 2012]

§ 54.403 Lifeline support amount.

(a) The federal Lifeline support amount for all eligible telecommunications carriers shall equal:

(1) *Basic support amount.* Federal Lifeline support in the amount of $9.25 per month will be made available to an eligible telecommunications carrier providing Lifeline service to a qualifying low-income consumer, if that carrier certifies to the Administrator that it will pass through the full amount of support to the qualifying low-income consumer and that it has received any non-federal regulatory approvals necessary to implement the rate reduction.

(2) *Tribal lands support amount.* Additional federal Lifeline support of up to $25 per month will be made available to an eligible telecommunications carrier providing Lifeline service to an eligible resident of Tribal lands, as defined in § 54.400 (e), to the extent that the eligible telecommunications carrier certifies to the Administrator that it will pass through the full Tribal lands support amount to the qualifying eligible resident of Tribal lands and that it has received any non-federal regulatory approvals necessary to implement the required rate reduction.

(b) *Application of Lifeline discount amount.* (1) Eligible telecommunications carriers that charge federal End User Common Line charges or equivalent federal charges must apply federal Lifeline support to waive the federal End User Common Line charges for Lifeline subscribers. Such carriers must apply any additional federal support amount to a qualifying low-income consumer's intrastate rate, if the carrier has received the non-federal regulatory approvals necessary to implement the required rate reduction. Other eligible telecommunications carriers must apply the federal Lifeline support amount, plus any additional support amount, to reduce the cost of any generally available residential service plan or package offered by such carriers that provides voice telephony service as described in § 54.101, and charge Lifeline subscribers the resulting amount.

(2) Where a subscriber makes only a partial payment to an eligible telecommunications carrier for a bundled service package, the eligible telecommunications carrier must apply the partial payment first to the allocated price of the voice telephony service component of the package and then to the cost of any additional services included in the bundled package.

(c) *Toll limitation service.* An eligible telecommunications carrier providing toll limitation service voluntarily elected by Lifeline subscribers whose Lifeline plans would otherwise include a fee for placing a toll call that would be in addition to the per month or per billing cycle price of the subscriber's Lifeline service, shall, for April 2012 Lifeline disbursements through December 2013 Lifeline disbursements, receive support in an amount equal to the lesser of:

(1) The eligible telecommunications carrier's incremental cost of providing either toll blocking services or toll control services to each Lifeline subscriber who has selected such service; or

(2) The following amounts for each Lifeline subscriber who has selected toll blocking services or toll control services:

(i) $3.00 per month per subscriber during 2012; and

(ii) $2.00 per month per subscriber during 2013.

[77 FR 12967, Mar. 2, 2012]

§ 54.404 The National Lifeline Accountability Database.

(a) *State certification.* An eligible telecommunications carrier operating in a state that provides an approved valid certification to the Commission in accordance with this section is not required to comply with the requirements set forth in paragraphs (b) and (c) of this section with respect to the eligible telecommunications carriers' subscribers in that state. A valid certification must include a statement that the state has a comprehensive system in place to prevent duplicative federal Lifeline support that is at least as robust as the system adopted by the Commission and that incorporates information from all eligible telecommunications carriers receiving low-income support in the state and their subscribers. A valid certification must also describe in detail how the state system functions and for each requirement adopted by the Commission to prevent duplicative support, how the state system performs the equivalent functions. The certification must be submitted to the Commission no later than six months from the effective date of this section of the Commission's rules to be valid. Such certification will be considered approved unless the Wireline Competition Bureau rejects the certification within 90 days of filing.

(b) *The National Lifeline Accountability Database.* In order to receive Lifeline support, eligible telecommunications carriers operating in states that have not provided the Commission with approved valid certification pursuant to paragraph (a) of this section must comply with the following requirements:

(1) All eligible telecommunications carriers must query the National Lifeline Accountability Database to determine whether a prospective subscriber who has executed a certification pursuant to § 54.410(d) is currently receiving a Lifeline service from another eligible telecommunications carrier; and whether anyone else living at the prospective subscriber's residential address is currently receiving a Lifeline service.

(2) If the Database indicates that a prospective subscriber, who is not seeking to port his or her telephone number, is currently receiving a Lifeline service, the eligible telecommunications carrier must not provide and shall not seek or receive Lifeline reimbursement for that subscriber.

(3) If the Database indicates that another individual at the prospective subscriber's residential address is currently receiving a Lifeline service, the eligible telecommunications carrier must not seek and will not receive Lifeline reimbursement for providing service to that prospective subscriber, unless the prospective subscriber has certified, pursuant to § 54.410(d) that to the best of his or her knowledge, no one in his or her household is already receiving a Lifeline service.

(4) An eligible telecommunications carrier is not required to comply with paragraphs (b)(1) through (3) of this section if it receives notice from a state Lifeline administrator or other state agency that the administrator or other agency has queried the Database about a prospective subscriber and that providing the prospective subscriber with a Lifeline benefit would not result in duplicative support.

(5) Eligible telecommunications carriers may query the Database only for the purposes provided in paragraphs (b)(1) through (b)(3) of this section, and to determine whether information with respect to its subscribers already in the Database is correct and complete.

(6) Eligible telecommunications carriers must transmit to the Database in a format prescribed by the Administrator each new and existing Lifeline subscriber's full name; full residential address; date of birth and the last four digits of the subscriber's Social Security number or Tribal Identification number, if the subscriber is a member of a Tribal nation and does not have a Social Security number; the telephone number associated with the Lifeline service; the date on which the Lifeline

service was initiated; the date on which the Lifeline service was terminated, if it has been terminated; the amount of support being sought for that subscriber; and the means through which the subscriber qualified for Lifeline.

(7) In the event that two or more eligible telecommunications carriers transmit the information required by this paragraph to the Database for the same subscriber, only the eligible telecommunications carrier whose information was received and processed by the Database first, as determined by the Administrator, will be entitled to reimbursement from the Fund for that subscriber.

(8) All eligible telecommunications carriers must update an existing Lifeline subscriber's information in the Database within ten business days of receiving any change to that information, except as described in paragraph (b)(10) of this section.

(9) All eligible telecommunications carriers must obtain, from each new and existing subscriber, consent to transmit the subscriber's information. Prior to obtaining consent, the eligible telecommunications carrier must describe to the subscriber, using clear, easily understood language, the specific information being transmitted, that the information is being transmitted to the Administrator to ensure the proper administration of the Lifeline program, and that failure to provide consent will result in subscriber being denied the Lifeline service.

(10) When an eligible telecommunications carrier de-enrolls a subscriber, it must transmit to the Database the date of Lifeline service de-enrollment within one business day of de-enrollment.

(c) *Tribal Link Up and the National Lifeline Accountability Database.* In order to receive universal service support reimbursement for Tribal Link Up, eligible telecommunications carriers operating in states that have not provided the Commission with a valid certification pursuant to paragraph (a) of this section, must comply with the following requirements:

(1) Such eligible telecommunications carriers must query the Database to determine whether a prospective Link Up recipient who has executed a certification pursuant to § 54.410(d) has previously received a Link Up benefit at the residential address provided by the prospective subscriber.

(2) If the Database indicates that a prospective subscriber has received a Link Up benefit at the residential address provided by the subscriber, the eligible telecommunications provider must not seek Link Up reimbursement for that subscriber.

(3) An eligible telecommunications carrier is not required to comply with paragraphs (c)(1) through (c)(2) of this section, if it receives notice from a state Lifeline administrator or other state agency that the administrator or other agency has queried the Database about a prospective subscriber and that providing the prospective subscriber with a Link Up benefit would not result in duplicative support or support to a subscriber who had already received Link Up support at that residential address.

(4) All eligible telecommunications carriers must transmit to the Database in a format prescribed by the Administrator each new and existing Link Up recipient's full name; residential address; date of birth; and the last four digits of the subscriber's Social Security number, or Tribal identification number if the subscriber is a member of a Tribal nation and does not have a Social Security number; the telephone number associated with the Link Up support; and the date of service activation. Where two or more eligible telecommunications carriers transmit the information required by this paragraph to the Database for the same subscriber, only the eligible telecommunications carrier whose information was received and processed by the Database first, as determined by the Administrator, will be entitled to reimbursement from the Fund for that subscriber.

(5) All eligible telecommunications carriers must obtain, from each new and existing subscriber, consent to transmit the information required in paragraph (c) of this section. Prior to obtaining consent, the eligible telecommunications carrier must describe to the subscriber, using clear, easily

understood language, the specific information being transmitted, that the information is being transmitted to the Administrator to ensure the proper administration of the Link Up program, and that failure to provide consent will result in the subscriber being denied the Link Up benefit.

[77 FR 12968, Mar. 2, 2012]

§ 54.405 Carrier obligation to offer Lifeline.

All eligible telecommunications carriers must:

(a) Make available Lifeline service, as defined in § 54.401, to qualifying low-income consumers.

(b) Publicize the availability of Lifeline service in a manner reasonably designed to reach those likely to qualify for the service.

(c) Indicate on all materials describing the service, using easily understood language, that it is a Lifeline service, that Lifeline is a government assistance program, the service is non-transferable, only eligible consumers may enroll in the program, and the program is limited to one discount per household. For the purposes of this section, the term ''materials describing the service'' includes all print, audio, video, and web materials used to describe or enroll in the Lifeline service offering, including application and certification forms.

(d) Disclose the name of the eligible telecommunications carrier on all materials describing the service.

(e) *De-enrollment*—(1) *De-enrollment generally*. If an eligible telecommunications carrier has a reasonable basis to believe that a Lifeline subscriber no longer meets the criteria to be considered a qualifying low-income consumer under § 54.409, the carrier must notify the subscriber of impending termination of his or her Lifeline service. Notification of impending termination must be sent in writing separate from the subscriber's monthly bill, if one is provided, and must be written in clear, easily understood language. A carrier providing Lifeline service in a state that has dispute resolution procedures applicable to Lifeline termination, that requires, at a minimum, written notification of impending termination, must comply with the applicable state requirements. The carrier must allow a subscriber 30-days following the date of the impending termination letter required to demonstrate continued eligibility. A subscriber making such a demonstration must present proof of continued eligibility to the carrier consistent with applicable annual re-certification requirements, as described in § 54.410(f). An eligible telecommunications carrier must terminate any subscriber who fails to demonstrate continued eligibility within the 30-day time period. A carrier providing Lifeline service in a state that has dispute resolution procedures applicable to Lifeline termination must comply with the applicable state requirements.

(2) *De-enrollment for duplicative support*. Notwithstanding paragraph (e)(1) of this section, upon notification by the Administrator to any eligible telecommunications carrier that a subscriber is receiving Lifeline service from another eligible telecommunications carrier or that more than one member of a subscriber's household is receiving Lifeline service and therefore that the subscriber should be de-enrolled from participation in that carrier's Lifeline program, the eligible telecommunications carrier must de-enroll the subscriber from participation in that carrier's Lifeline program within five business days. An eligible telecommunications carrier shall not be eligible for Lifeline reimbursement for any de-enrolled subscriber following the date of that subscriber's de-enrollment.

(3) *De-enrollment for non-usage*. Notwithstanding paragraph (e)(1) of this section, if a Lifeline subscriber fails to use, as ''usage'' is defined in § 54.407(c)(2), for 60 consecutive days a Lifeline service that does not require the eligible telecommunications carrier to assess or collect a monthly fee from its subscribers, an eligible telecommunications carrier must provide the subscriber 30 days' notice, using clear, easily understood language, that the subscriber's failure to use the Lifeline service within the 30-day notice period will result in service termination for non-usage under this paragraph. If the subscriber uses the Lifeline service within 30 days of the carrier providing such notice, the eligible

telecommunications carrier shall not terminate the subscriber's Lifeline service. Eligible telecommunications carriers shall report to the Commission annually the number of subscribers de-enrolled for non-usage under this paragraph. This de-enrollment information must be reported by month and must be submitted to the Commission at the time an eligible telecommunications carrier submits its annual certification report pursuant to § 54.416.

(4) *De-enrollment for failure to re-certify*. Notwithstanding paragraph (e)(1) of this section, an eligible telecommunications carrier must de-enroll a Lifeline subscriber who does not respond to the carrier's attempts to obtain re-certification of the subscriber's continued eligibility as required by § 54.410(f); who fails to provide the annual one-per-household re-certifications as required by § 54.410(f); or who relies on a temporary address and fails to respond to the carrier's address re-certification attempts pursuant to § 54.410(g). Prior to de-enrolling a subscriber under this paragraph, the eligible telecommunications carrier must notify the subscriber in writing separate from the subscriber's monthly bill, if one is provided using clear, easily understood language, that failure to respond to the re-certification request within 30 days of the date of the request will trigger de-enrollment. If a subscriber does not respond to the carrier's notice of impending de-enrollment, the carrier must de-enroll the subscriber from Lifeline within five business days after the expiration of the subscriber's time to respond to the re-certification efforts.

[77 FR 12969, Mar. 2, 2012]

§ 54.407 Reimbursement for offering Lifeline.

(a) Universal service support for providing Lifeline shall be provided directly to an eligible telecommunications carrier, based on the number of actual qualifying low-income consumers it serves.

(b) An eligible telecommunications carrier may receive universal service support reimbursement for each qualifying low-income consumer served. For each qualifying low-income consumer receiving Lifeline service, the reimbursement amount shall equal the federal support amount, including the support amounts described in § 54.403(a) and (c). The eligible telecommunications carrier's universal service support reimbursement shall not exceed the carrier's rate for that offering, or similar offerings, subscribed to by consumers who do not qualify for Lifeline.

(c) An eligible telecommunications carrier offering a Lifeline service that does not require the eligible telecommunications carrier to assess or collect a monthly fee from its subscribers:

(1) Shall not receive universal service support for a subscriber to such Lifeline service until the subscriber activates the service by whatever means specified by the carrier, such as completing an outbound call; and

(2) After service activation, an eligible telecommunications carrier shall only continue to receive universal service support reimbursement for such Lifeline service provided to subscribers who have used the service within the last 60 days, or who have cured their non-usage as provided for in § 54.405(e)(3). Any of these activities, if undertaken by the subscriber will establish ''usage'' of the Lifeline service:

(i) Completion of an outbound call;

(ii) Purchase of minutes from the eligible telecommunications carrier to add to the subscriber's service plan;

(iii) Answering an incoming call from a party other than the eligible telecommunications carrier or the eligible telecommunications carrier's agent or representative; or

(iv) Responding to direct contact from the eligible communications carrier and confirming that he or she wants to continue receiving the Lifeline service.

(d) In order to receive universal service support reimbursement, an eligible telecommunications carrier must certify, as part of each request for reimbursement, that it is in compliance with all of the rules in this subpart, and, to the extent required under this subpart, has obtained valid certification and re-certification forms for each of the subscribers for whom it is seeking reimbursement.

(e) In order to receive universal service support reimbursement, an eligible

telecommunications carrier must keep accurate records of the revenues it forgoes in providing Lifeline services. Such records shall be kept in the form directed by the Administrator and provided to the Administrator at intervals as directed by the Administrator or as provided in this subpart.

[77 FR 12970, Mar. 2, 2012, as amended at 77 FR 38534, June 28, 2012]

§ 54.409 Consumer qualification for Lifeline.

(a) To constitute a qualifying low-income consumer:

(1) A consumer's household income as defined in § 54.400(f) must be at or below 135% of the Federal Poverty Guidelines for a household of that size; or

(2) The consumer, one or more of the consumer's dependents, or the consumer's household must receive benefits from one of the following federal assistance programs: Medicaid; Supplemental Nutrition Assistance Program; Supplemental Security Income; Federal Public Housing Assistance (Section 8); Low-Income Home Energy Assistance Program; National School Lunch Program's free lunch program; or Temporary Assistance for Needy Families; or

(3) The consumer meets additional eligibility criteria established by a state for its residents, provided that such-state specific criteria are based solely on income or other factors directly related to income.

(b) A consumer who lives on Tribal lands is eligible for Lifeline service as a ''qualifying low-income consumer'' as defined by § 54.400(a) and as an ''eligible resident of Tribal lands'' as defined by § 54.400(e) if that consumer meets the qualifications for Lifeline specified in paragraph (a) of this section or if the consumer, one or more of the consumer's dependents, or the consumer's household participates in one of the following Tribal-specific federal assistance programs: Bureau of Indian Affairs general assistance; Tribally administered Temporary Assistance for Needy Families; Head Start (only those households meeting its income qualifying standard); or the Food Distribution Program on Indian Reservations.

(c) In addition to meeting the qualifications provided in paragraph (a) or (b) of this section, in order to constitute a qualifying low-income consumer, a consumer must not already be receiving a Lifeline service, and there must not be anyone else in the subscriber's household subscribed to a Lifeline service.

[77 FR 12970, Mar. 2, 2012, as amended at 77 FR 38534, June 28, 2012]

§ 54.410 Subscriber eligibility determination and certification.

(a) All eligible telecommunications carriers must implement policies and procedures for ensuring that their Lifeline subscribers are eligible to receive Lifeline services. An eligible telecommunications carrier may not provide a consumer with an activated device that it represents enables use of Lifeline-supported service, nor may it activate service that it represents to be Lifeline service, unless and until it has:

(1) Confirmed that the consumer is a qualifying low-income consumer pursuant to § 54.409, and;

(2) Completed the eligibility determination and certification required by this section and §§ 54.404 through 54.405, and completed any other necessary enrollment steps.

(b) *Initial income-based eligibility determination.* (1) Except where a state Lifeline administrator or other state agency is responsible for the initial determination of a subscriber's eligibility, when a prospective subscriber seeks to qualify for Lifeline or using the income-based eligibility criteria provided for in § 54.409(a)(1) or (a)(3) an eligible telecommunications carrier:

(i) Must not seek reimbursement for providing Lifeline to a subscriber, unless the carrier has received a certification of eligibility from the prospective subscriber that complies with the requirements set forth in paragraph (d) of this section and has confirmed the subscriber's income-based eligibility using the following procedures:

(A) If an eligible telecommunications carrier can determine a prospective subscriber's income-based eligibility by accessing one or more databases containing information regarding the subscriber's income (''income databases''), the eligible telecommunications carrier must access such income databases

and determine whether the prospective subscriber qualifies for Lifeline.

(B) If an eligible telecommunications carrier cannot determine a prospective subscriber's income-based eligibility by accessing income databases, the eligible telecommunications carrier must review documentation that establishes that the prospective subscriber meets the income-eligibility criteria set forth in § 54.409(a)(1) or (a)(3). Acceptable documentation of income eligibility includes the prior year's state, federal, or Tribal tax return; current income statement from an employer or paycheck stub; a Social Security statement of benefits; a Veterans Administration statement of benefits; a retirement/pension statement of benefits; an Unemployment/Workers' Compensation statement of benefit; federal or Tribal notice letter of participation in General Assistance; or a divorce decree, child support award, or other official document containing income information. If the prospective subscriber presents documentation of income that does not cover a full year, such as current pay stubs, the prospective subscriber must present the same type of documentation covering three consecutive months within the previous twelve months.

(ii) Must not retain copies of the documentation of a prospective subscriber's income-based eligibility for Lifeline.

(iii) Must, consistent with § 54.417, keep and maintain accurate records detailing the data source a carrier used to determine a subscriber's eligibility or the documentation a subscriber provided to demonstrate his or her eligibility for Lifeline.

(2) Where a state Lifeline administrator or other state agency is responsible for the initial determination of a subscriber's eligibility, an eligible telecommunications carrier must not seek reimbursement for providing Lifeline service to a subscriber, based on that subscriber's income eligibility, unless the carrier has received from the state Lifeline administrator or other state agency:

(i) Notice that the prospective subscriber meets the income-eligibility criteria set forth in § 54.409(a)(1) or (a)(3); and

(ii) A copy of the subscriber's certification that complies with the requirements set forth in paragraph (d) of this section.

(c) *Initial program-based eligibility determination.* (1) Except in states where a state Lifeline administrator or other state agency is responsible for the initial determination of a subscriber's program-based eligibility, when a prospective subscriber seeks to qualify for Lifeline service using the program-based criteria set forth in § 54.409(a)(2), (a)(3) or (b), an eligible telecommunications carrier:

(i) Must not seek reimbursement for providing Lifeline to a subscriber unless the carrier has received a certification of eligibility from the subscriber that complies with the requirements set forth in paragraph (d) of this section and has confirmed the subscriber's program-based eligibility using the following procedures:

(A) If the eligible telecommunications carrier can determine a prospective subscriber's program-based eligibility for Lifeline by accessing one or more databases containing information regarding enrollment in qualifying assistance programs (''eligibility databases''), the eligible telecommunications carrier must access such eligibility databases to determine whether the prospective subscriber qualifies for Lifeline based on participation in a qualifying assistance program; or

(B) If an eligible telecommunications carrier cannot determine a prospective subscriber's program-based eligibility for Lifeline by accessing eligibility databases, the eligible telecommunications carrier must review documentation demonstrating that a prospective subscriber qualifies for Lifeline under the program-based eligibility requirements. Acceptable documentation of program eligibility includes the current or prior year's statement of benefits from a qualifying assistance program, a notice or letter of participation in a qualifying assistance program, program participation documents, or another official document demonstrating that the prospective

subscriber, one or more of the prospective subscriber's dependents or the prospective subscriber's household receives benefits from a qualifying assistance program.

(ii) Must not retain copies of the documentation of a subscriber's program-based eligibility for Lifeline services.

(iii) Must, consistent with § 54.417, keep and maintain accurate records detailing the data source a carrier used to determine a subscriber's program-based eligibility or the documentation a subscriber provided to demonstrate his or her eligibility for Lifeline.

(2) Where a state Lifeline administrator or other state agency is responsible for the initial determination of a subscriber's eligibility, when a prospective subscriber seeks to qualify for Lifeline service using the program-based eligibility criteria provided in § 54.409, an eligible telecommunications carrier must not seek reimbursement for providing Lifeline to a subscriber unless the carrier has received from the state Lifeline administrator or other state agency:

(i) Notice that the subscriber meets the program-based eligibility criteria set forth in §§ 54.409(a)(2), (a)(3) or (b); and

(ii) a copy of the subscriber's certification that complies with the requirements set forth in paragraph (d) of this section.

(d) *Eligibility certifications.* Eligible telecommunications carriers and state Lifeline administrators or other state agencies that are responsible for the initial determination of a subscriber's eligibility for Lifeline must provide prospective subscribers Lifeline certification forms that in clear, easily understood language:

(1) Provide the following information:

(i) Lifeline is a federal benefit and that willfully making false statements to obtain the benefit can result in fines, imprisonment, de-enrollment or being barred from the program;

(ii) Only one Lifeline service is available per household;

(iii) A household is defined, for purposes of the Lifeline program, as any individual or group of individuals who live together at the same address and share income and expenses;

(iv) A household is not permitted to receive Lifeline benefits from multiple providers;

(v) Violation of the one-per-household limitation constitutes a violation of the Commission's rules and will result in the subscriber's de-enrollment from the program; and

(vi) Lifeline is a non-transferable benefit and the subscriber may not transfer his or her benefit to any other person.

(2) Require each prospective subscriber to provide the following information:

(i) The subscriber's full name;

(ii) The subscriber's full residential address;

(iii) Whether the subscriber's residential address is permanent or temporary;

(iv) The subscriber's billing address, if different from the subscriber's residential address;

(v) The subscriber's date of birth;

(vi) The last four digits of the subscriber's social security number, or the subscriber's Tribal identification number, if the subscriber is a member of a Tribal nation and does not have a social security number;

(vii) If the subscriber is seeking to qualify for Lifeline under the program-based criteria, as set forth in § 54.409, the name of the qualifying assistance program from which the subscriber, his or her dependents, or his or her household receives benefits; and

(viii) If the subscriber is seeking to qualify for Lifeline under the income-based criterion, as set forth in § 54.409, the number of individuals in his or her household.

(3) Require each prospective subscriber to certify, under penalty of perjury, that:

(i) The subscriber meets the income-based or program-based eligibility criteria for receiving Lifeline, provided in § 54.409;

(ii) The subscriber will notify the carrier within 30 days if for any reason he or she no longer satisfies the criteria for receiving Lifeline including, as relevant, if the subscriber no longer meets the income-based or program-based criteria for receiving Lifeline support, the subscriber is receiving

more than one Lifeline benefit, or another member of the subscriber's household is receiving a Lifeline benefit.

(iii) If the subscriber is seeking to qualify for Lifeline as an eligible resident of Tribal lands, he or she lives on Tribal lands, as defined in 54.400(e);

(iv) If the subscriber moves to a new address, he or she will provide that new address to the eligible telecommunications carrier within 30 days;

(v) If the subscriber provided a temporary residential address to the eligible telecommunications carrier, he or she will be required to verify his or her temporary residential address every 90 days;

(vi) The subscriber's household will receive only one Lifeline service and, to the best of his or her knowledge, the subscriber's household is not already receiving a Lifeline service;

(vii) The information contained in the subscriber's certification form is true and correct to the best of his or her knowledge,

(viii) The subscriber acknowledges that providing false or fraudulent information to receive Lifeline benefits is punishable by law; and

(ix) The subscriber acknowledges that the subscriber may be required to re-certify his or her continued eligibility for Lifeline at any time, and the subscriber's failure to re-certify as to his or her continued eligibility will result in de-enrollment and the termination of the subscriber's Lifeline benefits pursuant to § 54.405(e)(4).

(e) State Lifeline administrators or other state agencies that are responsible for the initial determination of a subscriber's eligibility for Lifeline must provide each eligible telecommunications carrier with a copy of each of the certification forms collected by the state Lifeline administrator or other state agency from that carrier's subscribers.

(f) *Annual eligibility re-certification process.* (1) All eligible telecommunications carriers must annually re-certify all subscribers except for subscribers in states where a state Lifeline administrator or other state agency is responsible for re-certification of subscribers' Lifeline eligibility.

(2) In order to re-certify a subscriber's eligibility, an eligible telecommunications carrier must confirm a subscriber's current eligibility to receive Lifeline by:

(i) Querying the appropriate eligibility databases, confirming that the subscriber still meets the program-based eligibility requirements for Lifeline, and documenting the results of that review; or

(ii) Querying the appropriate income databases, confirming that the subscriber continues to meet the income-based eligibility requirements for Lifeline, and documenting the results of that review; or

(iii) Obtaining a signed certification from the subscriber that meets the certification requirements in paragraph (d) of this section.

(3) Where a state Lifeline administrator or other state agency is responsible for re-certification of a subscriber's Lifeline eligibility, the state Lifeline administrator or other state agency must confirm a subscriber's current eligibility to receive a Lifeline service by:

(i) Querying the appropriate eligibility databases, confirming that the subscriber still meets the program-based eligibility requirements for Lifeline, and documenting the results of that review; or

(ii) Querying the appropriate income databases, confirming that the subscriber continues to meet the income-based eligibility requirements for Lifeline, and documenting the results of that review; or

(iii) Obtaining a signed certification from the subscriber that meets the certification requirements in paragraph (d) of this section.

(4) Where a state Lifeline administrator or other state agency is responsible for re-certification of subscribers' Lifeline eligibility, the state Lifeline administrator or other state agency must provide to each eligible telecommunications carrier the results of its annual re-certification efforts with respect to that eligible telecommunications carrier's subscribers.

(5) If an eligible telecommunications carrier is unable to re-certify a subscriber or has been notified of a state Lifeline administrator's or other state

agency's inability to re-certify a subscriber, the eligible telecommunications carrier must comply with the de-enrollment requirements provided for in § 54.405(e)(4).

(g) *Re-certification of temporary address*. An eligible telecommunications carrier must re-certify, every 90 days, the residential address of each of its subscribers who have provided a temporary address as part of the subscriber's initial certification or re-certification of eligibility, pursuant to paragraphs (d), (e), or (f) of this section.

[77 FR 12970, Mar. 2, 2012, as amended at 77 FR 38534, June 28, 2012; 78 FR 40970, July 9, 2013]

§ 54.412 Off reservation Tribal lands designation process.

(a) The Commission's Wireline Competition Bureau and the Office of Native Affairs and Policy may, upon receipt of a request made in accordance with the requirements of this section, designate as Tribal lands, for the purposes of the Lifeline and Tribal Link Up program, areas or communities that fall outside the boundaries of existing Tribal lands but which maintain the same characteristics as lands identified as Tribal lands defined as in § 54.400(e).

(b) A request for designation must be made to the Commission by a duly authorized official of a federally recognized American Indian Tribe or Alaska Native Village.

(c) A request for designation must clearly describe a defined geographical area for which the requesting party seeks designation as Tribal lands.

(d) A request for designation must demonstrate the Tribal character of the area or community.

(e) A request for designation must provide sufficient evidence of a nexus between the area or community and the Tribe, and describe in detail how program support to the area or community would aid the Tribe in serving the needs and interests of its citizens and further the Commission's goal of increasing telecommunications access on Tribal lands.

(f) Upon designation by the Wireline Competition Bureau and the Office of Native Affairs and Policy, the area or community described in the designation shall be considered Tribal lands for the purposes of this subpart.

[77 FR 12972, Mar. 2, 2012, as amended at 77 FR 38534, June 28, 2012]

§ 54.413 Link Up for Tribal lands.

(a) *Definition*. For purposes of this subpart, the term ''Tribal Link Up'' means an assistance program for eligible residents of Tribal lands seeking telecommunications service from a telecommunications carrier that is receiving high-cost support on Tribal lands, pursuant to subpart D of this part, that provides:

(1) A 100 percent reduction, up to $100, of the customary charge for commencing telecommunications service for a single telecommunications connection at a subscriber's principal place of residence imposed by an eligible telecommunications carrier that is also receiving high-cost support on Tribal lands, pursuant to subpart D of this part. For purposes of this subpart, a ''customary charge for commencing telecommunications service'' is the ordinary charge an eligible telecommunications carrier imposes and collects from all subscribers to initiate service with that eligible telecommunications carrier. A charge imposed only on qualifying low-income consumers to initiate service is not a customary charge for commencing telecommunications service. Activation charges routinely waived, reduced, or eliminated with the purchase of additional products, services, or minutes are not customary charges eligible for universal service support; and

(2) A deferred schedule of payments of the customary charge for commencing telecommunications service for a single telecommunications connection at a subscriber's principal place of residence imposed by an eligible telecommunications carrier that is also receiving high-cost support on Tribal lands, pursuant to subpart D of this part, for which the eligible resident of Tribal lands does not pay interest. The interest charges not assessed to the eligible resident of tribal lands shall be for a customary charge for connecting telecommunications service of up to $200 and such interest charges shall be deferred for a period not to exceed one year.

(b) An eligible resident of Tribal lands may receive the benefit of the Tribal Link Up program for a second or subsequent time only for otherwise qualifying commencement of telecommunications service at a principal place of residence with an address different from the address for which Tribal Link Up assistance was provided previously.

[77 FR 12973, Mar. 2, 2012]

§ 54.414 Reimbursement for Tribal Link Up.

(a) Eligible telecommunications carriers that are receiving high-cost support, pursuant to subpart D of this part, may receive universal service support reimbursement for the reduction in their customary charge for commencing telecommunications service and for providing a deferred schedule for payment of the customary charge for commencing telecommunications services for which the subscriber does not pay interest, in conformity with § 54.413.

(b) In order to receive universal support reimbursement for providing Tribal Link Up, eligible telecommunications carriers must follow the procedures set forth in § 54.410 to determine an eligible resident of Tribal lands' initial eligibility for Tribal Link Up. Eligible telecommunications carriers must obtain a certification form from each eligible resident of Tribal lands that complies with § 54.410 prior to enrolling him or her in Tribal Link Up.

(c) In order to receive universal service support reimbursement for providing Tribal Link Up, eligible telecommunications carriers must keep accurate records of the reductions in their customary charge for commencing telecommunications service and for providing a deferred schedule for payment of the charges assessed for commencing service for which the subscriber does not pay interest, in conformity with § 54.413. Such records shall be kept in the form directed by the Administrator and provided to the Administrator at intervals as directed by the Administrator or as provided in this subpart. The reductions in the customary charge for which the eligible telecommunications carrier may receive reimbursement shall include only the difference between the carrier's customary connection or interest charges and the charges actually assessed to the subscriber receiving Lifeline services.

[77 FR 12973, Mar. 2, 2012]

§ 54.416 Annual certifications by eligible telecommunications carriers.

(a) *Eligible telecommunications carrier certifications*. Eligible telecommunications carriers are required to make and submit to the Administrator the following annual certifications, under penalty of perjury, relating to the Lifeline program:

(1) An officer of each eligible telecommunications carrier must certify that the carrier has policies and procedures in place to ensure that its Lifeline subscribers are eligible to receive Lifeline services. Each eligible telecommunications carrier must make this certification annually to the Administrator as part of the carrier's submission of annual re-certification data pursuant to this section. In instances where an eligible telecommunications carrier confirms consumer eligibility by relying on income or eligibility databases, as defined in § 54.410(b)(1)(i)(A) or (c)(1)(i)(A), the representative must attest annually as to what specific data sources the eligible telecommunications carrier used to confirm eligibility.

(2) An officer of the eligible telecommunications carrier must certify that the carrier is in compliance with all federal Lifeline certification procedures. Eligible telecommunications carriers must make this certification annually to the Administrator as part of the carrier's submission of re-certification data pursuant to this section.

(b) All eligible telecommunications carriers must annually provide the results of their re-certification efforts, performed pursuant to § 54.410(f), to the Commission and the Administrator. Eligible telecommunications carriers designated as such by one or more states pursuant to § 54.201 must also provide, on an annual basis, the results of their re-certification efforts to state commissions for subscribers residing in those states where the state designated

the eligible telecommunications carrier. Eligible telecommunications carriers must also provide their annual recertification results for subscribers residing on Tribal lands to the relevant Tribal governments.

(c) States that mandate Lifeline support may impose additional standards on eligible telecommunications carriers operating in their states to ensure compliance with state Lifeline programs.

[77 FR 12973, Mar. 2, 2012, as amended at 77 FR 38534, June 28, 2012]

§ 54.417 Recordkeeping requirements.

(a) Eligible telecommunications carriers must maintain records to document compliance with all Commission and state requirements governing the Lifeline and Tribal Link Up program for the three full preceding calendar years and provide that documentation to the Commission or Administrator upon request. Notwithstanding the preceding sentence, eligible telecommunications carriers must maintain the documentation required in § 54.410(d) and (f) for as long as the subscriber receives Lifeline service from that eligible telecommunications carrier.

(b) If an eligible telecommunications carrier provides Lifeline discounted wholesale services to a reseller, it must obtain a certification from that reseller that it is complying with all Commission requirements governing the Lifeline and Tribal Link Up program.

(c) Non-eligible-telecommunications-carrier resellers that purchase Lifeline discounted wholesale services to offer discounted services to low-income consumers must maintain records to document compliance with all Commission requirements governing the Lifeline and Tribal Link Up program for the three full preceding calendar years and provide that documentation to the Commission or Administrator upon request. To the extent such a reseller provides discounted services to low-income consumers, it must fulfill the obligations of an eligible telecommunications carrier in §§ 54.405 and 54.410.

[77 FR 12974, Mar. 2, 2012, as amended at 77 FR 38534, June 28, 2012]

§ 54.418 Digital Television Transition Notices by Eligible Telecommunications Carriers.

(a) Eligible telecommunications carriers (ETCs) that receive federal universal service funds shall provide their Lifeline or Link-Up customers with notices about the transition for over-the-air full power broadcasting from analog to digital service (the ''DTV Transition'') in the monthly bills or bill notices received by such customers, or as a monthly stand-alone mailer (*e.g.*, postcard, brochure), beginning April 1, 2009, and concluding on June 30, 2009.

(b) The notice must be provided as part of an information section on the bill or bill notice itself or on a secondary document mailed with the bill or bill notice, or as part of a monthly stand-alone mailer (*e.g.*, postcard, brochure) in the same language or languages as the customer's bill or bill notice. These notices must:

(1) Be in clear and conspicuous print;

(2) Convey at least the following information about the DTV transition:

(i) The nationwide switch to digital television broadcasting will be complete on June 12, 2009, but your local television stations may switch sooner. After the switch, analog-only television sets that receive TV programming through an antenna will need a converter box to continue to receive over-the-air TV. Watch your local stations to find out when they will turn off their analog signal and switch to digital-only broadcasting. Analog-only TVs should continue to work as before to receive low power, Class A or translator television stations and with cable and satellite TV services, gaming consoles, VCRs, DVD players, and similar products.

(ii) Information about the DTV transition is available from your local television stations, *http://www.DTV.gov*, or 1–888–CALL–FCC (TTY 1–888–TELL–FCC), and from *http://www.dtv2009.gov* or 1–888–DTV–2009 (TTY 1–877–530–2634) for information about subsidized coupons for digital-to-analog converter boxes;

(c) If an ETC's Lifeline or Link-Up customer does not receive paper versions of either a bill or a notice of billing, then that customer must be

provided with equivalent monthly notices in whatever medium they receive information about their monthly bill or as a monthly stand-alone mailer (*e.g.*, postcard, brochure).

(d) ETCs that receive federal universal service funds shall provide information on the DTV Transition that is equivalent to the information provided pursuant to paragraph (b)(2) of this section as part of any Lifeline or Link-Up publicity campaigns conducted by the ETC between March 27, 2008, and June 30, 2009.

[73 FR 28732, May 19, 2008, as amended at 74 FR 8878, Feb. 27, 2009]

§ 54.419 Validity of electronic signatures.

(a) For the purposes of this subpart, an electronic signature, defined by the Electronic Signatures in Global and National Commerce Act, as an electronic sound, symbol, or process, attached to or logically associated with a contract or other record and executed or adopted by a person with the intent to sign the record, has the same legal effect as a written signature.

(b) For the purposes of this subpart, an electronic record, defined by the Electronic Signatures in Global and National Commerce Act as a contract or other record created, generated, sent, communicated, received, or stored by electronic means, constitutes a record.

[77 FR 12974, Mar. 2, 2012]

§ 54.420 Low income program audits.

(a) *Independent audit requirements for eligible telecommunications carriers.* Companies that receive $5 million or more annually in the aggregate, on a holding company basis, in Lifeline reimbursements must obtain a third party biennial audit of their compliance with the rules in this subpart. Such engagements shall be agreed upon performance attestations to assess the company's overall compliance with rules and the company's internal controls regarding these regulatory requirements.

(1) For purposes of the $5 million threshold, a holding company consists of operating companies and affiliates, as that term is defined in section 3(2) of the Communications Act of 1934, as amended, that are eligible telecommunications carriers.

(2) The initial audit must be completed one year after the Commission issues a standardized audit plan outlining the scope of the engagement and the extent of compliance testing to be performed by third-party auditors and shall be conducted every two years thereafter, unless directed otherwise by the Commission. The following minimum requirements shall apply:

(i) The audit must be conducted by a licensed certified public accounting firm that is independent of the carrier.

(ii) The engagement shall be conducted consistent with government accounting standards (GAGAS).

(3) The certified public accounting firm shall submit to the Commission any rule interpretations necessary to complete the biennial audit, and the Administrator shall notify all firms subject to the biennial audit requirement of such requests. The audit issue will be noted, but not held as a negative finding, in future audit reports for all carriers subject to this requirement unless and until guidance has been provided by the Commission.

(4) Within 60 days after completion of the audit work, but prior to finalization of the report, the third party auditor shall submit a draft of the audit report to the Commission and the Administrator, who shall be deemed authorized users of such reports. Finalized audit reports must be provided to the Commission, the Administrator, and relevant states and Tribal governments within 30 days of the issuance of the final audit report. The reports will not be considered or deemed confidential.

(5) *Delegated authority.* The Wireline Competition Bureau and the Office of Managing Director have delegated authority to perform the functions specified in paragraphs (a)(2) and (a)(3) of this section.

(b) *Audit requirements for new eligible telecommunications carriers.* After a company is designated for the first time in any state or territory the Administrator will audit that new eligible telecommunications carrier to assess its overall compliance with the rules in this subpart and the company's internal controls regarding these regulatory

requirements. This audit should be conducted within the carrier's first twelve months of seeking federal low-income Universal Service Fund support.

[77 FR 12974, Mar. 2, 2012, as amended at 77 FR 38534, June 28, 2012]

§ 54.422 Annual reporting for eligible telecommunications carriers that receive low-income support.

(a) In order to receive support under this subpart, an eligible telecommunications carrier must annually report:

(1) The company name, names of the company's holding company, operating companies and affiliates, and any branding (a ''dba,'' or ''doing-business-as company'' or brand designation) as well as relevant universal service identifiers for each such entity by Study Area Code. For purposes of this paragraph, ''affiliates'' has the meaning set forth in section 3(2) of the Communications Act of 1934, as amended; and

(2) Information describing the terms and conditions of any voice telephony service plans offered to Lifeline subscribers, including details on the number of minutes provided as part of the plan, additional charges, if any, for toll calls, and rates for each such plan. To the extent the eligible telecommunications carrier offers plans to Lifeline subscribers that are generally available to the public, it may provide summary information regarding such plans, such as a link to a public Web site outlining the terms and conditions of such plans.

(b) In order to receive support under this subpart, a common carrier that is designated as an eligible telecommunications carrier under section 214(e)(6) of the Act and does not receive support under subpart D of this part must annually provide:

(1) Detailed information on any outage in the prior calendar year, as that term is defined in 47 CFR 4.5, of at least 30 minutes in duration for each service area in which the eligible telecommunications carrier is designated for any facilities it owns, operates, leases, or otherwise utilizes that potentially affect

(i) At least ten percent of the end users served in a designated service area; or

(ii) A 911 special facility, as defined in 47 CFR 4.5(e).

(iii) Specifically, the eligible telecommunications carrier's annual report must include information detailing:

(A) The date and time of onset of the outage;

(B) A brief description of the outage and its resolution;

(C) The particular services affected;

(D) The geographic areas affected by the outage;

(E) Steps taken to prevent a similar situation in the future; and

(F) The number of customers affected.

(2) The number of complaints per 1,000 connections (fixed or mobile) in the prior calendar year;

(3) Certification of compliance with applicable service quality standards and consumer protection rules;

(4) Certification that the carrier is able to function in emergency situations as set forth in § 54.202(a)(2).

(c) All reports required by this section must be filed with the Office of the Secretary of the Commission, and with the Administrator. Such reports must also be filed with the relevant state commissions and the relevant authority in a U.S. territory or Tribal governments, as appropriate.

[77 FR 38534, June 28, 2012]

Subpart F—Universal Service Support for Schools and Libraries

§ 54.500 Terms and definitions.

(a) *Billed entity*. A ''billed entity'' is the entity that remits payment to service providers for services rendered to eligible schools and libraries.

(b) *Educational purposes*. For purposes of this subpart, activities that are integral, immediate, and proximate to the education of students, or in the case of libraries, integral, immediate and proximate to the provision of library services to library patrons, qualify as ''educational purposes.'' Activities that occur on library or school property are presumed to be integral, immediate, and proximate to the education of students or the provision of library services to library patrons.

(c) *Elementary school.* An ''elementary school'' means an elementary school as defined in 20 U.S.C. 7801(18), a non-profit institutional day or residential school, including a public elementary charter school, that provides elementary education, as determined under state law.

(d) *Library.* A ''library'' includes:

(1) A public library;

(2) A public elementary school or secondary school library;

(3) An academic library;

(4) A research library, which for the purpose of this section means a library that:

(i) Makes publicly available library services and materials suitable for scholarly research and not otherwise available to the public; and

(ii) Is not an integral part of an institution of higher education; and

(5) A private library, but only if the state in which such private library is located determines that the library should be considered a library for the purposes of this definition.

(e) *Library consortium.* A ''library consortium'' is any local, statewide, regional, or interstate cooperative association of libraries that provides for the systematic and effective coordination of the resources of schools, public, academic, and special libraries and information centers, for improving services to the clientele of such libraries. For the purposes of these rules, references to library will also refer to library consortium.

(f) *Lowest corresponding price.* ''Lowest corresponding price'' is the lowest price that a service provider charges to non-residential customers who are similarly situated to a particular school, library, or library consortium for similar services.

(g) *Master contract.* A ''master contract'' is a contract negotiated with a service provider by a third party, the terms and conditions of which are then made available to an eligible school, library, rural health care provider, or consortium that purchases directly from the service provider.

(h) *Minor contract modification.* A ''minor contract modification'' is a change to a universal service contract that is within the scope of the original contract and has no effect or merely a negligible effect on price, quantity, quality, or delivery under the original contract.

(i) *National school lunch program.* The ''national school lunch program'' is a program administered by the U.S. Department of Agriculture and state agencies that provides free or reduced price lunches to economically disadvantaged children. A child whose family income is between 130 percent and 185 percent of applicable family size income levels contained in the nonfarm poverty guidelines prescribed by the Office of Management and Budget is eligible for a reduced price lunch. A child whose family income is 130 percent or less of applicable family size income levels contained in the nonfarm income poverty guidelines prescribed by the Office of Management and Budget is eligible for a free lunch.

(j) *Pre-discount price.* The ''pre-discount price'' means, in this subpart, the price the service provider agrees to accept as total payment for its telecommunications or information services. This amount is the sum of the amount the service provider expects to receive from the eligible school or library and the amount it expects to receive as reimbursement from the universal service support mechanisms for the discounts provided under this subpart.

(k) *Secondary school.* A ''secondary school'' means a secondary school as defined in 20 U.S.C. 7801(38), a non-profit institutional day or residential school, including a public secondary charter school, that provides secondary education, as determined under state law except that the term does not include any education beyond grade 12.

(l) *State telecommunications network.* A ''state telecommunications network'' is a state government entity that procures, among other things, telecommunications offerings from multiple service providers and bundles such offerings into packages available to schools, libraries, or rural health care providers that are eligible for universal service support, or a state government entity that provides, using its own facilities, such telecommunications offerings to such schools, libraries, and rural health care providers.

(m) *Wide area network.* For purposes of this subpart, a ''wide area network'' is a voice or data network that provides connections from one or more computers within an eligible school or library to one or more computers or networks that are external to such eligible school or library. Excluded from this definition is a voice or data network that provides connections between or among instructional buildings of a single school campus or between or among non-administrative buildings of a single library branch.

[63 FR 2128, Jan. 13, 1998, as amended at 68 FR 36942, June 20, 2003; 76 FR 56302, Sept. 13, 2011]

EFFECTIVE DATE NOTE: At 79 FR 49197, Aug. 19, 2014, § 54.500 was amended by removing the alphabetical paragraph designations and adding in alphabetical order definitions for ''basic maintenance,'' ''consortium,'' ''internal connections,'' ''managed internal broadband services,'' and ''voice services'', effective July 1, 2015, For the convenience of the user, the added text is set forth as follows:

§ 54.500 Terms and definitions.

Basic maintenance. A service is eligible for support as a ''basic maintenance'' service if, but for the maintenance at issue, the internal connection would not function and serve its intended purpose with the degree of reliability ordinarily provided in the marketplace to entities receiving such services. Basic maintenance services do not include services that maintain equipment that is not supported by E-rate or that enhance the utility of equipment beyond the transport of information, or diagnostic services in excess of those necessary to maintain the equipment's ability to transport information.

* * * * *

Consortium. A ''consortium'' is any local, statewide, regional, or interstate cooperative association of schools and/or libraries eligible for E-rate support that seeks competitive bids for eligible services or funding for eligible services on behalf of some or all of its members. Consortium may also include health care providers eligible under subpart G, and public sector (governmental) entities, including, but not limited to, state colleges and state universities, state educational broadcasters, counties, and municipalities, although such entities are not eligible for support. Eligible schools and libraries may not join consortia with ineligible private sector members unless the pre-discount prices of any services that such consortium receives are generally tariffed rates.

* * * * *

Internal connections. A service is eligible for support as a component of an institution's ''internal connections'' if such service is necessary to transport or distribute broadband within one or more instructional buildings of a single school campus or within one or more non-administrative buildings that comprise a single library branch.

* * * * *

Managed internal broadband services. A service is eligible for support as ''managed internal broadband services'' if provided by a third party for the operation, management, and/or monitoring of the eligible components of a school or library local area network (LAN) and wireless LAN.

* * * * *

Voice services. ''Voice services'' include local phone service, long distance service, plain old telephone service (POTS), radio loop, 800 service, satellite telephone, shared telephone service, Centrex, wireless telephone service such as cellular, interconnected voice over Internet protocol (VoIP), and the circuit capacity dedicated to providing voice services.

§ 54.501 Eligible recipients.

(a) *Schools.* (1) Only schools meeting the statutory definition of ''elementary school'' or ''secondary school'' as defined in § 54.500(c) or (k) of these rules, and not excluded under paragraphs (a)(2) or (a)(3) of this section shall be eligible for discounts on telecommunications and other supported services under this subpart.

(2) Schools operating as for-profit businesses shall not be eligible for discounts under this subpart.

(3) Schools with endowments exceeding $50,000,000 shall not be eligible for discounts under this subpart.

(b) *Libraries.* (1) Only libraries eligible for assistance from a State library administrative agency under the Library Services and Technology Act (Pub. L. 104–208) and not excluded under paragraphs (b)(2) or (3) of this section shall be eligible for discounts under this subpart.

(2) A library's eligibility for universal service funding shall depend on its funding as an independent entity.

Only libraries whose budgets are completely separate from any schools (including, but not limited to, elementary and secondary schools, colleges, and universities) shall be eligible for discounts as libraries under this subpart.

(3) Libraries operating as for-profit businesses shall not be eligible for discounts under this subpart.

(c) *Consortia.*

(1) For consortia, discounts under this subpart shall apply only to the portion of eligible telecommunications and other supported services used by eligible schools and libraries.

(2) Service providers shall keep and retain records of rates charged to and discounts allowed for eligible schools and libraries—on their own or as part of a consortium. Such records shall be available for public inspection.

[62 FR 32948, June 17, 1997, as amended at 63 FR 2129, Jan. 13, 1998; 68 FR 36942, June 20, 2003; 75 FR 75411, Dec. 3, 2010; 76 FR 56302, Sept. 13, 2011; 79 FR 49198, Aug. 19, 2014]

EFFECTIVE DATE NOTE: At 79 FR 49198, Aug. 19, 2014, § 54.501 was amended by revising paragraph (a)(1), effective July 1, 2015. For the convenience of the user, the revised text is set forth as follows:

§ 54.501 Eligible recipients.

(a) * * *

(1) Only schools meeting the statutory definition of ''elementary school'' and ''secondary school'' as defined in § 54.500 of this subpart, and not excluded under paragraphs (a)(2) or (3) of this section shall be eligible for discounts on telecommunications and other supported services under this subpart.

* * * * *

§ 54.502 Eligible services.

(a) *Supported services.* All supported services are listed in the Eligible Services List as updated annually in accordance with paragraph (b) of this section. The services in this subpart will be supported in addition to all reasonable charges that are incurred by taking such services, such as state and federal taxes. Charges for termination liability, penalty surcharges, and other charges not included in the cost of taking such service shall not be covered by the universal service support mechanisms. The supported services fall within the following general categories:

(1) *Category one.* Telecommunications services, telecommunications, and Internet access, as defined in § 54.5 and described in the Eligible Services List are category one supported services.

(2) *Category two.* Internal connections, basic maintenance and managed internal broadband services as defined in § 54.500 and described in the Eligible Services List are category two supported services.

(b) *Funding years 2015 and 2016.* Libraries, schools, or school districts with schools that receive funding for category two services in funding years 2015 and/or 2016 shall be eligible for support pursuant to paragraphs (b)(1) through (6) of this section.

(1) *Five-year budget.* Each eligible school or library shall be eligible for a budgeted amount of support for category two services over a five-year funding cycle. Excluding support for internal connections received prior to funding year 2015, each school or library shall be eligible for the total available budget less any support received for category two services in the prior four funding years.

(2) *School budget.* Each eligible school shall be eligible for support for category two services up to a pre-discount price of $150 per student over a five-year funding cycle. Applicants shall provide the student count per school, calculated at the time that the discount is calculated each funding year. New schools may estimate the number of students, but shall repay any support provided in excess of the maximum budget based on student enrollment the following funding year.

(3) *Library budget.* Each eligible library shall be eligible for support for category two services, up to a pre-discount price of $2.30 per square foot over a five-year funding cycle. Libraries shall provide the total area for all floors, in square feet, of each library outlet separately, including all areas enclosed by the outer walls of the library outlet and occupied by the library, including those areas off-limits to the public.

(4) *Funding floor.* Each eligible school and library will be eligible for support for category two services up to at least a pre-discount price of $9,200 over five funding years.

(5) *Requests.* Applicants shall request support for category two services for each school or library based on the number of students per school building or square footage per library building. Category two funding for a school or library may not be used for another school or library. If an applicant requests less than the maximum budget available for a school or library, the applicant may request the remaining balance in a school's or library's category two budget in subsequent funding years of a five year cycle. The costs for category two services shared by multiple eligible entities shall be divided reasonably between each of the entities for which support is sought in that funding year.

(6) *Non-instructional buildings.* Support is not available for category two services provided to or within non-instructional school buildings or separate library administrative buildings unless those category two services are essential for the effective transport of information to or within one or more instructional buildings of a school or non-administrative library buildings, or the Commission has found that the use of those services meets the definition of educational purpose, as defined in § 54.500. When applying for category two support for eligible services to a non-instructional school building or library administrative building, the applicant shall allocate the cost of providing services to one or more of the eligible school or library buildings that benefit from those services being provided.

(c) *Funding year 2017 and beyond.* Absent further action from the Commission, each eligible library or school in a school district, which did not receive funding for category two services in funding years 2015 and/or 2016, shall be eligible for support for category two services, except basic maintenance services, no more than twice every five funding years. For the purpose of determining eligibility, the five-year period begins in any funding year in which the school or library receives discounted category two services other than basic maintenance services. If a school or library receives category two services other than basic maintenance services that are shared with other schools or libraries (for example, as part of a consortium), the shared services will be attributed to the school or library in determining whether it is eligible for support. Support is not available for category two services provided to or within non-instructional school buildings or separate library administrative buildings unless those category two services are essential for the effective transport of information to or within one or more instructional buildings of a school or non-administrative library buildings, or the Commission has found that the use of those services meets the definition of educational purpose, as defined in § 54.500.

(d) *Eligible services list process.* The Administrator shall submit by March 30 of each year a draft list of services eligible for support, based on the Commission's rules for the following funding year. The Wireline Competition Bureau will issue a Public Notice seeking comment on the Administrator's proposed eligible services list. The final list of services eligible for support will be released at least 60 days prior to the opening of the application filing window for the following funding year.

EFFECTIVE DATE NOTES: 1. At 79 FR 49198, Aug. 19, 2014, § 54.502 was revised. Paragraphs (b)(2), (b)(3) and (5) contain information collection and recordkeeping requirements and will not become effective until approval has been given by the Office of Management and Budget.

2. At 79 FR 49198, Aug. 19, 2014, § 54.502 was revised, however paragraph (a) does not become effective July 1, 2015.

§ 54.503 Competitive bidding requirements.

(a) All entities participating in the schools and libraries universal service support program must conduct a fair and open competitive bidding process, consistent with all requirements set forth in this subpart.

NOTE TO PARAGRAPH (a): The following is an illustrative list of activities or behaviors that would not result in a fair and open competitive bidding process: the applicant for supported services has a relationship with a service provider that would unfairly influence the outcome of a competition or would furnish the service provider with inside information; someone other than the applicant or an authorized representative of the applicant prepares, signs, and submits the FCC

Form 470 and certification; a service provider representative is listed as the FCC Form 470 contact person and allows that service provider to participate in the competitive bidding process; the service provider prepares the applicant's FCC Form 470 or participates in the bid evaluation or vendor selection process in any way; the applicant turns over to a service provider the responsibility for ensuring a fair and open competitive bidding process; an applicant employee with a role in the service provider selection process also has an ownership interest in the service provider seeking to participate in the competitive bidding process; and the applicant's FCC Form 470 does not describe the supported services with sufficient specificity to enable interested service providers to submit responsive bids.

(b) *Competitive bid requirements.* Except as provided in § 54.511(c), an eligible school, library, or consortium that includes an eligible school or library shall seek competitive bids, pursuant to the requirements established in this subpart, for all services eligible for support under § 54.502. These competitive bid requirements apply in addition to state and local competitive bid requirements and are not intended to preempt such state or local requirements.

(c) *Posting of FCC Form 470.* (1) An eligible school, library, or consortium that includes an eligible school or library seeking bids for eligible services under this subpart shall submit a completed FCC Form 470 to the Administrator to initiate the competitive bidding process. The FCC Form 470 and any request for proposal cited in the FCC Form 470 shall include, at a minimum, the following information, to the extent applicable with respect to the services requested:

(i) A list of specified services for which the school, library, or consortium requests bids; and

(ii) Sufficient information to enable bidders to reasonably determine the needs of the applicant.

(2) The FCC Form 470 shall be signed by a person authorized to request bids for eligible services for the eligible school, library, or consortium, including such entities.

(i) A person authorized to request bids on behalf of the entities listed on an FCC Form 470 shall certify under oath that:

(A) The schools meet the statutory definition of ''elementary school'' or ''secondary school'' as defined in § 54.500 of these rules, do not operate as for-profit businesses, and do not have endowments exceeding $50 million.

(B) The libraries or library consortia eligible for assistance from a State library administrative agency under the Library Services and Technology Act of 1996 do not operate as for-profit businesses and have budgets that are completely separate from any school (including, but not limited to, elementary and secondary schools, colleges, and universities).

(C) Support under this support mechanism is conditional upon the school(s) and library(ies) securing access to all of the resources, including computers, training, software, maintenance, internal connections, and electrical connections necessary to use the services purchased effectively.

(ii) A person authorized to both request bids and order services on behalf of the entities listed on an FCC Form 470 shall, in addition to making the certifications listed in paragraph (c)(2)(i) of this section, certify under oath that:

(A) The services the school, library, or consortium purchases at discounts will be used primarily for educational purposes and will not be sold, resold, or transferred in consideration for money or any other thing of value, except as allowed by § 54.513.

(B) All bids submitted for eligible products and services will be carefully considered, with price being the primary factor, and the bid selected will be for the most cost-effective service offering consistent with § 54.511.

(3) The Administrator shall post each FCC Form 470 that it receives from an eligible school, library, or consortium that includes an eligible school or library on its Web site designated for this purpose.

(4) After posting on the Administrator's Web site an eligible school, library, or consortium FCC Form 470, the Administrator shall send confirmation of the posting to the entity requesting service. That entity shall then wait at least four weeks from the date on which its description of services is posted on the Administrator's

Web site before making commitments with the selected providers of services. The confirmation from the Administrator shall include the date after which the requestor may sign a contract with its chosen provider(s).

(d) *Gift restrictions.* (1) Subject to paragraphs (d)(3) and (4) of this section, an eligible school, library, or consortium that includes an eligible school or library may not directly or indirectly solicit or accept any gift, gratuity, favor, entertainment, loan, or any other thing of value from a service provider participating in or seeking to participate in the schools and libraries universal service program. No such service provider shall offer or provide any such gift, gratuity, favor, entertainment, loan, or other thing of value except as otherwise provided herein. Modest refreshments not offered as part of a meal, items with little intrinsic value intended solely for presentation, and items worth $20 or less, including meals, may be offered or provided, and accepted by any individuals or entities subject to this rule, if the value of these items received by any individual does not exceed $50 from any one service provider per funding year. The $50 amount for any service provider shall be calculated as the aggregate value of all gifts provided during a funding year by the individuals specified in paragraph (d)(2)(ii) of this section.

(2) For purposes of this paragraph:

(i) The terms ''school, library, or consortium'' include all individuals who are on the governing boards of such entities (such as members of a school committee), and all employees, officers, representatives, agents, consultants or independent contractors of such entities involved on behalf of such school, library, or consortium with the Schools and Libraries Program of the Universal Service Fund (E-rate Program), including individuals who prepare, approve, sign or submit E-rate applications, or other forms related to the E-rate Program, or who prepare bids, communicate or work with E-rate service providers, E-rate consultants, or with USAC, as well as any staff of such entities responsible for monitoring compliance with the E-rate Program; and

(ii) The term ''service provider'' includes all individuals who are on the governing boards of such an entity (such as members of the board of directors), and all employees, officers, representatives, agents, or independent contractors of such entities.

(3) The restrictions set forth in this paragraph shall not be applicable to the provision of any gift, gratuity, favor, entertainment, loan, or any other thing of value, to the extent given to a family member or a friend working for an eligible school, library, or consortium that includes an eligible school or library, provided that such transactions:

(i) Are motivated solely by a personal relationship,

(ii) Are not rooted in any service provider business activities or any other business relationship with any such eligible school, library, or consortium, and

(iii) Are provided using only the donor's personal funds that will not be reimbursed through any employment or business relationship.

(4) Any service provider may make charitable donations to an eligible school, library, or consortium that includes an eligible school or library in the support of its programs as long as such contributions are not directly or indirectly related to E-rate procurement activities or decisions and are not given by service providers to circumvent competitive bidding and other E-rate program rules, including those in paragraph (c)(2)(i)(C) of this section, requiring schools and libraries to pay their own non-discount share for the services they are purchasing.

(e) *Exemption to competitive bidding requirements.* An applicant that seeks support for commercially available high-speed Internet access services for a pre-discount price of $3,600 or less per school or library annually is exempt from the competitive bidding requirements in paragraphs (a) through (c) of this section.

(1) Internet access, as defined in § 54.5, is eligible for this exemption only if the purchased service offers at least 100 Mbps downstream and 10 Mbps upstream.

(2) The Chief, Wireline Competition Bureau, is delegated authority to lower

the annual cost of high-speed Internet access services or raise the speed threshold of broadband services eligible for this competitive bidding exemption, based on a determination of what rates and speeds are commercially available prior to the start of the funding year.

[75 FR 75412, Dec. 3, 2010, as amended at 76 FR 56302, Sept. 13, 2011; 79 FR 49199, Aug. 19, 2014]

EFFECTIVE DATE NOTE: At 79 FR 49199, Aug. 19, 2014, § 54.503 was revised. However, paragraph (c) contains information collection and recordkeeping requirements and will not become effective until approval has been given by the Office of Management and Budget.

§ 54.504 Requests for services.

(a) *Filing of the FCC Form 471.* An eligible school, library, or consortium that includes an eligible school or library seeking to receive discounts for eligible services under this subpart shall, upon entering into a signed contract or other legally binding agreement for eligible services, submit a completed FCC Form 471 to the Administrator.

(1) The FCC Form 471 shall be signed by the person authorized to order eligible services for the eligible school, library, or consortium and shall include that person's certification under oath that:

(i) The schools meet the statutory definition of ''elementary school'' or ''secondary school'' as defined in § 54.500 of this subpart, do not operate as for-profit businesses, and do not have endowments exceeding $50 million.

(ii) The libraries or library consortia eligible for assistance from a State library administrative agency under the Library Services and Technology Act of 1996 do not operate as for-profit businesses and whose budgets are completely separate from any school (including, but not limited to, elementary and secondary schools, colleges, and universities).

(iii) The entities listed on the FCC Form 471 application have secured access to all of the resources, including computers, training, software, maintenance, internal connections, and electrical connections, necessary to make effective use of the services purchased, as well as to pay the discounted charges for eligible services from funds to which access has been secured in the current funding year. The billed entity will pay the non-discount portion of the cost of the goods and services to the service provider(s).

(iv) The entities listed on the FCC Form 471 application have complied with all applicable state and local laws regarding procurement of services for which support is being sought.

(v) The services the school, library, or consortium purchases at discounts will be used primarily for educational purposes and will not be sold, resold, or transferred in consideration for money or any other thing of value, except as allowed by § 54.513.

(vi) The entities listed in the application have complied with all program rules and acknowledge that failure to do so may result in denial of discount funding and/or recovery of funding.

(vii) The applicant understands that the discount level used for shared services is conditional, for future years, upon ensuring that the most disadvantaged schools and libraries that are treated as sharing in the service, receive an appropriate share of benefits from those services.

(viii) The applicant recognizes that it may be audited pursuant to its application, that it will retain for ten years any and all worksheets and other records relied upon to fill out its application, and that, if audited, it will make such records available to the Administrator.

(ix) Except as exempted by § 54.503(e), all bids submitted to a school, library, or consortium seeking eligible services were carefully considered and the most cost-effective bid was selected in accordance with § 54.503 of this subpart, with price being the primary factor considered, and it is the most cost-effective means of meeting educational needs and technology goals.

(2) All pricing and technology infrastructure information submitted as part of an FCC Form 471 shall be treated as public and non-confidential by the Administrator unless the applicant specifies a statute, rule, or other restriction, such as a court order or an

existing contract limitation barring public release of the information.

(i) Contracts and other agreements executed after adoption of this rule may not prohibit disclosure of pricing or technology infrastructure information.

(ii) The exemption for existing contract limitations shall not apply to voluntary extensions or renewals of existing contracts.

(b) *Mixed eligibility requests.* If 30 percent or more of a request for discounts made in an FCC Form 471 is for ineligible services, the request shall be denied in its entirety.

(c) *Rate disputes.* Schools, libraries, and consortia including those entities, and service providers may have recourse to the Commission, regarding interstate rates, and to state commissions, regarding intrastate rates, if they reasonably believe that the lowest corresponding price is unfairly high or low.

(1) Schools, libraries, and consortia including those entities may request lower rates if the rate offered by the carrier does not represent the lowest corresponding price.

(2) Service providers may request higher rates if they can show that the lowest corresponding price is not compensatory, because the relevant school, library, or consortium including those entities is not similarly situated to and subscribing to a similar set of services to the customer paying the lowest corresponding price.

(d) *Service substitution.* (1) The Administrator shall grant a request by an applicant to substitute a service or product for one identified on its FCC Form 471 where:

(i) The service or product has the same functionality;

(ii) The substitution does not violate any contract provisions or state or local procurement laws;

(iii) The substitution does not result in an increase in the percentage of ineligible services or functions; and

(iv) The applicant certifies that the requested change is within the scope of the controlling FCC Form 470, including any associated Requests for Proposal, for the original services.

(2) In the event that a service substitution results in a change in the pre-discount price for the supported service, support shall be based on the lower of either the pre-discount price of the service for which support was originally requested or the pre-discount price of the new, substituted service.

(3) For purposes of this rule, the two categories of eligible services are not deemed to have the same functionality as one another.

(e) *Mixed eligibility services.* A request for discounts for a product or service that includes both eligible and ineligible components must allocate the cost of the contract to eligible and ineligible components.

(1) *Ineligible components.* If a product or service contains ineligible components, costs must be allocated to the extent that a clear delineation can be made between the eligible and ineligible components. The delineation must have a tangible basis, and the price for the eligible portion must be the most cost-effective means of receiving the eligible service.

(2) *Ancillary ineligible components.* If a product or service contains ineligible components that are ancillary to the eligible components, and the product or service is the most cost-effective means of receiving the eligible component functionality, without regard to the value of the ineligible component, costs need not be allocated between the eligible and ineligible components. Discounts shall be provided on the full cost of the product or service. An ineligible component is ''ancillary'' if a price for the ineligible component cannot be determined separately and independently from the price of the eligible components, and the specific package remains the most cost-effective means of receiving the eligible services, without regard to the value of the ineligible functionality.

(3) The Administrator shall utilize the cost allocation requirements of this paragraph in evaluating mixed eligibility requests under paragraph (e)(1) of this section.

(f) *Filing of FCC Form 473.* All service providers eligible to provide telecommunications and other supported services under this subpart shall submit annually a completed FCC Form 473 to the Administrator. The FCC

Form 473 shall be signed by an authorized person and shall include that person's certification under oath that:

(1) The prices in any offer that this service provider makes pursuant to the schools and libraries universal service support program have been arrived at independently, without, for the purpose of restricting competition, any consultation, communication, or agreement with any other offeror or competitor relating to those prices, the intention to submit an offer, or the methods or factors used to calculate the prices offered;

(2) The prices in any offer that this service provider makes pursuant to the schools and libraries universal service support program will not be knowingly disclosed by this service provider, directly or indirectly, to any other offeror or competitor before bid opening (in the case of a sealed bid solicitation) or contract award (in the case of a negotiated solicitation) unless otherwise required by law; and

(3) No attempt will be made by this service provider to induce any other concern to submit or not to submit an offer for the purpose of restricting competition.

(4) The service provider listed on the FCC Form 473 certifies that the invoices that are submitted by this Service Provider to the Billed Entity for reimbursement pursuant to Billed Entity Applicant Reimbursement Forms (FCC Form 472) are accurate and represent payments from the Billed Entity to the Service Provider for equipment and services provided pursuant to E-rate program rules.

(5) The service provider listed on the FCC Form 473 certifies that the bills or invoices issued by this service provider to the billed entity are for equipment and services eligible for universal service support by the Administrator, and exclude any charges previously invoiced to the Administrator by the service provider.

[79 FR 49199, Aug. 19, 2014]

EFFECTIVE DATE NOTES: At 79 FR 49199, Aug. 19, 2014, § 54.504 was revised. However, paragraphs (a) and (f) contain information collection and recordkeeping requirements and will not become effective until approval has been given by the Office of Management and Budget.

2. At 49199, Aug. 19, 2014, § 54.504 was revised, however paragraphs (f)(4) and (f)(5) will become effective July 1, 2016.

§ 54.505 Discounts.

(a) *Discount mechanism.* Discounts for eligible schools and libraries shall be set as a percentage discount from the pre-discount price.

(b) *Discount percentages.* The discounts available to eligible schools and libraries shall range from 20 percent to 90 percent of the pre-discount price for all eligible services provided by eligible providers, as defined in this subpart. The discounts available to a particular school, library, or consortium of only such entities shall be determined by indicators of poverty and high cost.

(1) For schools and school districts, the level of poverty shall be based on the percentage of the student enrollment that is eligible for a free or reduced price lunch under the national school lunch program or a federally-approved alternative mechanism. School districts shall divide the total number of students eligible for the National School Lunch Program within the school district by the total number of students within the school district to arrive at a percentage of students eligible. This percentage rate shall then be applied to the discount matrix to set a discount rate for the supported services purchased by all schools within the school district. Independent charter schools, private schools, and other eligible educational facilities should calculate a single discount percentage rate based on the total number of students under the control of the central administrative agency.

(2) For libraries and library consortia, the level of poverty shall be based on the percentage of the student enrollment that is eligible for a free or reduced price lunch under the national school lunch program or a federally-approved alternative mechanism in the public school district in which they are located and should use that school district's discount rate when applying as a library system or on behalf of individual libraries within that system. Library systems that have branches or outlets in more than one public school district should use the address of the central outlet or main administrative

office to determine which school district the library system is in, and should use that school district's discount rate when applying as a library system or on behalf of individual libraries within that system. If the library is not in a school district, then its level of poverty shall be based on an average of the percentage of students eligible for the national school lunch program in each of the school districts that children living in the library's location attend.

(3) The Administrator shall classify schools and libraries as ''urban'' or ''rural'' based on location in an urban or rural area, according to the following desigantions.

(i) The Administrator shall designate a school or library as ''urban'' if the school or library is located in an urbanized area as determined by the most recent rural-urban classification by the Bureau of the Census. The Administrator shall designate all other schools and libraries as ''rural.''

(ii) Any school district or library system that has a majority of schools or libraries in a rural area qualifies for the additional rural discount.

(4) School districts, library systems, or other billed entities shall calculate discounts on supported services described in § 54.502(a) that are shared by two or more of their schools, libraries, or consortia members by calculating an average discount based on the applicable district-wide discounts of all member schools and libraries. School districts, library systems, or other billed entities shall ensure that, for each year in which an eligible school or library is included for purposes of calculating the aggregate discount rate, that eligible school or library shall receive a proportionate share of the shared services for which support is sought. For schools, the discount shall be a simple average of the applicable district-wide percentage for all schools sharing a portion of the shared services. For libraries, the average discount shall be a simple average of the applicable discounts to which the libraries sharing a portion of the shared services are entitled.

(c) *Matrices*. Except as provided in paragraph (d) of this section, the Administrator shall use the following matrices to set discount rates to be applied to eligible category one and category two services purchased by eligible schools, school districts, libraries, or consortia based on the institution's level of poverty and location in an ''urban'' or ''rural'' area.

% of students eligible for National School Lunch Program	Category one schools and libraries discount matrix		Category two schools and libraries discount matrix	
	Discount level		Discount level	
	Urban discount	Rural discount	Urban discount	Rural discount
< 1	20	25	20	25
1–19	40	50	40	50
20–34	50	60	50	60
35–49	60	70	60	70
50–74	80	80	80	80
75–100	90	90	85	85

(d) *Voice Services*. Discounts for category one voice services shall be reduced by 20 percentage points off applicant discount percentage rates for each funding year starting in funding year 2015, and reduced by an additional 20 percentage points off applicant discount percentage rates each subsequent funding year.

(e) *Interstate and intrastate services*. Federal universal service support for schools and libraries shall be provided for both interstate and intrastate services.

(1) Federal universal service support under this subpart for eligible schools and libraries in a state is contingent upon the establishment of intrastate discounts no less than the discounts applicable for interstate services.

(2) A state may, however, secure a temporary waiver of this latter requirement based on unusually compelling conditions.

(f) *State support.* Federal universal service discounts shall be based on the price of a service prior to the application of any state provided support for schools or libraries.

[62 FR 32948, June 17, 1997, as amended at 62 FR 41304, Aug. 1, 1997; 63 FR 2130, Jan. 13, 1998; 63 FR 70572, Dec. 21, 1998; 75 FR 75414, Dec. 3, 2010; 79 FR 49201, Aug. 19, 2014]

§ 54.506 [Reserved]

§ 54.507 Cap.

(a) *Amount of the annual cap.* The aggregate annual cap on federal universal service support for schools and libraries shall be $2.25 billion per funding year, of which $1 billion per funding year will be available for the category two services, as described in § 54.502(a)(2), unless demand for category one services is higher than available funding.

(1) *Inflation increase.* In funding year 2010 and subsequent funding years, the $2.25 billion funding cap on federal universal service support for schools and libraries shall be automatically increased annually to take into account increases in the rate of inflation as calculated in paragraph (a)(2) of this section.

(2) *Increase calculation.* To measure increases in the rate of inflation for the purposes of this paragraph (a), the Commission shall use the Gross Domestic Product Chain-type Price Index (GDP–CPI). To compute the annual increase as required by this paragraph (a), the percentage increase in the GDP–CPI from the previous year will be used. For instance, the annual increase in the GDP–CPI from 2008 to 2009 would be used for the 2010 funding year. The increase shall be rounded to the nearest 0.1 percent by rounding 0.05 percent and above to the next higher 0.1 percent and otherwise rounding to the next lower 0.1 percent. This percentage increase shall be added to the amount of the annual funding cap from the previous funding year. If the yearly average GDP–CPI decreases or stays the same, the annual funding cap shall remain the same as the previous year.

(3) *Public notice.* When the calculation of the yearly average GDP–CPI is determined, the Wireline Competition Bureau shall publish a public notice in the FEDERAL REGISTER within 60 days announcing any increase of the annual funding cap based on the rate of inflation.

(4) *Filing window requests.* At the close of the filing window, if requests for category one services are greater than the available funding, the Administrator shall shift category two funds to provide support for category one services. If available funds are sufficient to meet demand for category one services, the Administrator, at the direction of the Wireline Competition Bureau, shall direct the remaining additional funds to provide support for category two requests.

(5) *Amount of unused funds.* All funds collected that are unused shall be carried forward into subsequent funding years for use in the schools and libraries support mechanism in accordance with the public interest and notwithstanding the annual cap. The Chief, Wireline Competition Bureau, is delegated authority to determine the proportion of unused funds, if any, needed to meet category one demand, and to direct the Administrator to use any remaining funds to provide support for category two requests. The Administrator shall report to the Commission, on a quarterly basis, funding that is unused from prior years of the schools and libraries support mechanism.

(6) *Application of unused funds.* On an annual basis, in the second quarter of each calendar year, all funds that are collected and that are unused from prior years shall be available for use in the next full funding year of the schools and libraries mechanism in accordance with the public interest and notwithstanding the annual cap as described in this paragraph (a).

(b) *Funding year.* A funding year for purposes of the schools and libraries cap shall be the period July 1 through June 30.

(c) *Requests.* Funds shall be available to fund discounts for eligible schools and libraries and consortia of such eligible entities on a first-come-first-served basis, with requests accepted beginning on the first of July prior to each funding year. The Administrator shall maintain on the Administrator's Web site a running tally of the funds already committed for the existing

funding year. The Administrator shall implement an initial filing period that treats all schools and libraries filing within that period as if their applications were simultaneously received. The initial filing period shall begin on the date that the Administrator begins to receive applications for support, and shall conclude on a date to be determined by the Administrator. The Administrator may implement such additional filing periods as it deems necessary.

(d) *Annual filing requirement.* Schools and libraries, and consortia of such eligible entities shall file new funding requests for each funding year no sooner than the July 1 prior to the start of that funding year. Schools, libraries, and eligible consortia must use recurring services for which discounts have been committed by the Administrator within the funding year for which the discounts were sought. Implementation of non-recurring services may begin on April 1 prior to the July 1 start of the funding year. The deadline for implementation of non-recurring services will be September 30 following the close of the funding year. An applicant may request and receive from the Administrator an extension of the implementation deadline for non-recurring services if it satisfies one of the following criteria:

(1) The applicant's funding commitment decision letter is issued by the Administrator on or after March 1 of the funding year for which discounts are authorized;

(2) The applicant receives a service provider change authorization or service substitution authorization from the Administrator on or after March 1 of the funding year for which discounts are authorized;

(3) The applicant's service provider is unable to complete implementation for reasons beyond the service provider's control; or

(4) The applicant's service provider is unwilling to complete installation because funding disbursements are delayed while the Administrator investigates their application for program compliance.

(e) *Long term contracts.* If schools and libraries enter into long term contracts for eligible services, the Administrator shall only commit funds to cover the pro rata portion of such a long term contract scheduled to be delivered during the funding year for which universal service support is sought.

(f) *Rules of distribution.* When the filing period described in paragraph (c) of this section closes, the Administrator shall calculate the total demand for both category one and category two support submitted by applicants during the filing period. If total demand for the funding year exceeds the total support available for category one or both categories, the Administrator shall take the following steps:

(1) *Category one.* The Administrator shall first calculate the demand for category one services for all discount levels. The Administrator shall allocate the category one funds to these requests for support, beginning with the most economically disadvantaged schools and libraries, as determined by the schools and libraries discount matrix in § 54.505(c). Schools and libraries eligible for a 90 percent discount shall receive first priority for the category one funds. The Administrator shall next allocate funds toward the requests submitted by schools and libraries eligible for an 80 percent discount, then for a 70 percent discount, and shall continue committing funds for category one services in the same manner to the applicants at each descending discount level until there are no funds remaining.

(2) *Category two.* The Administrator shall next calculate the demand for category two services for all discount categories as determined by the schools and libraries discount matrix in § 54.505(c). If that demand exceeds the category two budget for that funding year, the Administrator shall allocate the category two funds beginning with the most economically disadvantaged schools and libraries, as determined by the schools and libraries discount matrix in § 54.505(c). The Administrator shall allocate funds toward the category two requests submitted by schools and libraries eligible for an 85 percent discount first, then for a 80 percent discount, and shall continue committing funds in the same manner to the applicants at each descending

discount level until there are no category two funds remaining.

(3) To the extent that there are single discount percentage levels associated with ''shared services'' under § 54.505(b)(4), the Administrator shall allocate funds to the applicants at each descending discount level (e.g., 90 percent, 89 percent, then 88 percent) until there are no funds remaining.

(4) For both paragraphs (f)(1) and (2) of this section, if the remaining funds are not sufficient to support all of the funding requests within a particular discount level, the Administrator shall allocate funds at that discount level using the percentage of students eligible for the National School Lunch Program. Thus, if there is not enough support to fund all requests at the 40 percent discount level, the Administrator shall allocate funds beginning with those applicants with the highest percentage of NSLP eligibility for that discount level by funding those applicants with 19 percent NSLP eligibility, then 18 percent NSLP eligibility, and shall continue committing funds in the same manner to applicants at each descending percentage of NSLP until there are no funds remaining.

[79 FR 49201, Aug. 19, 2014]

EFFECTIVE DATE NOTES: 1. At 79 FR 49201, Aug. 19, 2014, § 54.507 was revised. However, paragraph (d) contains information collection and recordkeeping requirements and will not become effective until approval has been given by the Office of Management and Budget.

2. At 79 FR 49201, Aug. 19, 2014, § 54.507 was revised however, paragraphs (a) through (c)and (e) through (f) are effective July 1, 2015.

§ 54.508 [Reserved]

§ 54.509 Adjustments to the discount matrix.

(a) *Estimating future spending requests.* When submitting their requests for specific amounts of funding for a funding year, schools, libraries, library consortia, and consortia including such entities shall also estimate their funding requests for the following funding year to enable the Administrator, to estimate funding demand for the following year.

(b) Reduction in percentage discounts. At all times other than within a filing period described in § 54.507(c), if the estimates schools and libraries make of their future funding needs lead the Administrator to predict that total funding request for a funding year will exceed the available funding, the Administrator shall calculate the percentage reduction to all schools and libraries, except those in the two most disadvantaged categories, necessary to permit all requests in the next funding year to be fully funded.

(c) *Remaining funds.* If funds remain under the cap at the end of the funding year in which discounts have been reduced below those set in the matrices, the Administrator shall consult with the Commission to establish the best way to distribute those funds.

[62 FR 32948, June 17, 1997, as amended at 62 FR 41304, Aug. 1, 1997; 63 FR 70572, Dec. 21, 1998; 69 FR 6191, Feb. 10, 2004]

§ 54.511 Ordering services.

(a) *Selecting a provider of eligible services.* Except as exempted in § 54.503(e), in selecting a provider of eligible services, schools, libraries, library consortia, and consortia including any of those entities shall carefully consider all bids submitted and must select the most cost-effective service offering. In determining which service offering is the most cost-effective, entities may consider relevant factors other than the pre-discount prices submitted by providers, but price should be the primary factor considered.

(b) *Lowest corresponding price.* Providers of eligible services shall not submit bids for or charge schools, school districts, libraries, library consortia, or consortia including any of these entities a price above the lowest corresponding price for supported services, unless the Commission, with respect to interstate services or the state commission with respect to intrastate services, finds that the lowest corresponding price is not compensatory. Promotional rates offered by a service provider for a period of more than 90 days must be included among the comparable rates upon which the lowest corresponding price is determined.

[79 FR 59203, Aug. 19, 2014]

§ 54.513 Resale and transfer of services.

(a) *Prohibition on resale.* Eligible supported services provided at a discount under this subpart shall not be sold, resold, or transferred in consideration of money or any other thing of value, except as provided in paragraph (b) of this section.

(b) *Disposal of obsolete equipment components of eligible services.* Eligible equipment components of eligible services purchased at a discount under this subpart shall be considered obsolete if the equipment components have has been installed for at least five years. Obsolete equipment components of eligible services may be resold or transferred in consideration of money or any other thing of value, disposed of, donated, or traded.

(c) *Permissible fees.* This prohibition on resale shall not bar schools, school districts, libraries, and library consortia from charging either computer lab fees or fees for classes in how to navigate over the Internet. There is no prohibition on the resale of services that are not purchased pursuant to the discounts provided in this subpart.

(d) Eligible services and equipment components of eligible services purchased at a discount under this subpart shall not be transferred, with or without consideration of money or any other thing of value, for a period of three years after purchase, except that eligible services and equipment components of eligible services may be transferred to another eligible school or library in the event that the particular location where the service originally was received is permanently or temporarily closed. If an eligible service or equipment component of a service is transferred due to the permanent or temporary closure of a school or library, the transferor must notify the Administrator of the transfer, and both the transferor and recipient must maintain detailed records documenting the transfer and the reason for the transfer for a period of five years.

[62 FR 32948, June 17, 1997, as amended at 69 FR 6191, Feb. 10, 2004; 75 FR 75415, Dec. 3, 2010]

§ 54.514 Payment for discounted services.

(a) *Invoice filing deadline.* Invoices must be submitted to the Administrator:

(1) 120 days after the last day to receive service, or

(2) 120 days after the date of the FCC Form 486 Notification Letter, whichever is later.

(b) *Invoice deadline extension.* In advance of the deadline calculated pursuant to paragraph (a) of this section, service providers or billed entities may request a one-time extension of the invoicing deadline. The Administrator shall grant a 120 day extension of the invoice filing deadline, if it is timely requested.

(c) *Choice of payment method.* Service providers providing discounted services under this subpart in any funding year shall, prior to the submission of the FCC Form 471, permit the billed entity to choose the method of payment for the discounted services from those methods approved by the Administrator, including by making a full, undiscounted payment and receiving subsequent reimbursement of the discount amount from the Administrator.

[79 FR 49203, Aug. 19, 2014]

EFFECTIVE DATE NOTES: 1. At 79 FR 49203, Aug. 19, 2014, § 54.514 was revised. However, paragraph (a) contains information collection and recordkeeping requirements and will not become effective until approval has been given by the Office of Management and Budget.

2. At 79 FR 49203, Aug. 19, 2014, § 54.514 was revised, however, paragraph (c) is effective July 1, 2016.

§ 54.515 Distributing support.

(a) A telecommunications carrier providing services eligible for support under this subpart to eligible schools and libraries may, at the election of the carrier, treat the amount eligible for support under this subpart as an offset against the carrier's universal service contribution obligation for the year in which the costs for providing eligible services were incurred or receive a direct reimbursement from the Administrator for that amount. Carriers shall elect in January of each year the method by which they will be reimbursed and shall remain subject to

that method for the duration of the calendar year. Any support amount that is owed a carrier that fails to remit its monthly universal service contribution obligation, however, shall first be applied as an offset to that carrier's contribution obligation. Such a carrier shall remain subject to the offsetting method for the remainder of the calendar year in which it failed to remit their monthly universal service obligation. A carrier that continues to be in arrears on its universal service contribution obligations at the end of a calendar year shall remain subject to the offsetting method for the next calendar year.

(b) If a telecommunications carrier elects to treat the amount eligible for support under this subpart as an offset against the carrier's universal service contribution obligation and the total amount of support owed to the carrier exceeds its universal service obligation, calculated on an annual basis, the carrier shall receive a direct reimbursement in the amount of the difference. Any such reimbursement due a carrier shall be submitted to that carrier no later than the end of the first quarter of the calendar year following the year in which the costs were incurred and the offset against the carrier's universal service obligation was applied.

[63 FR 67009, Dec. 4, 1998]

§54.516 Auditing.

(a) *Recordkeeping requirements*—(1) *Schools and libraries.* Schools and libraries shall retain all documents related to the application for, receipt, and delivery of discounted telecommunications and other supported services for at least 5 years after the last day of service delivered in a particular Funding Year. Any other document that demonstrates compliance with the statutory or regulatory requirements for the schools and libraries mechanism shall be retained as well. Schools and libraries shall maintain asset and inventory records of equipment purchased as components of supported internal connections services sufficient to verify the actual location of such equipment for a period of five years after purchase.

(2) *Service providers.* Service providers shall retain documents related to the delivery of discounted telecommunications and other supported services for at least 5 years after the last day of the delivery of discounted services. Any other document that demonstrates compliance with the statutory or regulatory requirements for the schools and libraries mechanism shall be retained as well.

(b) *Production of records.* Schools, libraries, and service providers shall produce such records at the request of any representative (including any auditor) appointed by a state education department, the Administrator, the FCC, or any local, state or federal agency with jurisdiction over the entity.

(c) *Audits.* Schools, libraries, and service providers shall be subject to audits and other investigations to evaluate their compliance with the statutory and regulatory requirements for the schools and libraries universal service support mechanism, including those requirements pertaining to what services and products are purchased, what services and products are delivered, and how services and products are being used. Schools and libraries receiving discounted services must provide consent before a service provider releases confidential information to the auditor, reviewer, or other representative.

[69 FR 55111, Sept. 13, 2004]

EFFECTIVE DATE NOTES: 1.At 79 FR 49203, Aug. 19, 2014, §54.516 was revised, effective July 1, 2015. For the convenience of the user, the revised text is set forth as follows:

§54.516 Auditing and inspections.

(a) *Recordkeeping requirements*—(1) *Schools, libraries, and consortia.* Schools, libraries, and any consortium that includes schools or libraries shall retain all documents related to the application for, receipt, and delivery of supported services for at least 10 years after the latter of the last day of the applicable funding year or the service delivery deadline for the funding request. Any other document that demonstrates compliance with the statutory or regulatory requirements for the schools and libraries mechanism shall be retained as well. Schools, libraries, and consortia shall maintain asset and inventory records of equipment purchased as components of supported category two services sufficient to verify the actual location of such

equipment for a period of 10 years after purchase.

(2) *Service providers.* Service providers shall retain documents related to the delivery of supported services for at least 10 years after the latter of the last day of the applicable funding year or the service delivery deadline for the funding request. Any other document that demonstrates compliance with the statutory or regulatory requirements for the schools and libraries mechanism shall be retained as well.

(b) *Production of records.* Schools, libraries, consortia, and service providers shall produce such records at the request of any representative (including any auditor) appointed by a state education department, the Administrator, the FCC, or any local, state or federal agency with jurisdiction over the entity.

(c) *Audits.* Schools, libraries, consortia, and service providers shall be subject to audits and other investigations to evaluate their compliance with the statutory and regulatory requirements for the schools and libraries universal service support mechanism, including those requirements pertaining to what services and products are purchased, what services and products are delivered, and how services and products are being used. Schools, libraries, and consortia receiving discounted services must provide consent before a service provider releases confidential information to the auditor, reviewer, or other representative.

(d) *Inspections.* Schools, libraries, consortia and service providers shall permit any representative (including any auditor) appointed by a state education department, the Administrator, the Commission or any local, state or federal agency with jurisdiction over the entity to enter their premises to conduct E-rate compliance inspections.

2. At 79 FR 49203, Aug. 19, 2014, § 54.516 was revised. However, paragraphs (a) through (c) contain information collection and recordkeeping requirements and will not become effective until approval has been given by the Office of Management and Budget.

§ 54.517 [Reserved]

§ 54.518 Support for wide area networks.

To the extent that schools, libraries or consortia that include an eligible school or library build or purchase a wide area network to provide telecommunications services, the cost of such wide area networks shall not be eligible for universal service discounts provided under this subpart.

[75 FR 75415, Dec. 3, 2010]

§ 54.519 State telecommunications networks.

(a) *Telecommunications services.* State telecommunications networks may secure discounts under the universal service support mechanisms on supported telecommunications services (as described in § 54.502(a)) on behalf of eligible schools and libraries (as described in § 54.501) or consortia that include an eligible school or library. Such state telecommunications networks shall pass on such discounts to eligible schools and libraries and shall:

(1) Maintain records listing each eligible school and library and showing the basis for each eligibility determination;

(2) Maintain records demonstrating the discount amount to which each eligible school and library is entitled and the basis for such determination;

(3) Take reasonable steps to ensure that each eligible school or library receives a proportionate share of the shared services;

(4) Request that service providers apply the appropriate discount amounts on the portion of the supported services used by each school or library;

(5) Direct eligible schools and libraries to pay the discounted price; and

(6) Comply with the competitive bid requirements set forth in § 54.503.

(b) *Internet access and installation and maintenance of internal connections.* State telecommunications networks either may secure discounts on Internet access and installation and maintenance of internal connections in the manner described in paragraph (a) of this section with regard to telecommunications, or shall be eligible, consistent with § 54.502(a), to receive universal service support for providing such services to eligible schools, libraries, and consortia including those entities.

[63 FR 2131, Jan. 13, 1998; 63 FR 33586, June 19, 1998, as amended at75 FR 75415, Dec. 3, 2010]

§ 54.520 Children's Internet Protection Act certifications required from recipients of discounts under the federal universal service support mechanism for schools and libraries.

(a) *Definitions.*

(1) *School*. For the purposes of the certification requirements of this rule, school means school, school board, school district, local education agency or other authority responsible for administration of a school.

(2) *Library*. For the purposes of the certification requirements of this rule, library means library, library board or authority responsible for administration of a library.

(3) *Billed entity*. Billed entity is defined in § 54.500. In the case of a consortium, the billed entity is the lead member of the consortium.

(4) *Statutory definitions*.

(i) The term ''minor'' means any individual who has not attained the age of 17 years.

(ii) The term ''obscene'' has the meaning given such term in 18 U.S.C. 1460.

(iii) The term ''child pornography'' has the meaning given such term in 18 U.S.C. 2256.

(iv) The term ''harmful to minors'' means any picture, image, graphic image file, or other visual depiction that—

(A) Taken as a whole and with respect to minors, appeals to a prurient interest in nudity, sex, or excretion;

(B) Depicts, describes, or represents, in a patently offensive way with respect to what is suitable for minors, an actual or simulated sexual act or sexual contact, actual or simulated normal or perverted sexual acts, or a lewd exhibition of the genitals; and

(C) Taken as a whole, lacks serious literary, artistic, political, or scientific value as to minors.

(v) The terms ''sexual act'' and ''sexual contact'' have the meanings given such terms in 18 U.S.C. 2246.

(vi) The term ''technology protection measure'' means a specific technology that blocks or filters Internet access to the material covered by a certification under paragraph (c) of this section.

(b) *Who is required to make certifications?* (1) A school or library that receives discounts for Internet access and internal connections services under the federal universal service support mechanism for schools and libraries, must make such certifications as described in paragraph (c) of this section. The certifications required and described in paragraph (c) of this section must be made in each funding year.

(2) Schools and libraries that only receive discounts for telecommunications services under the federal universal service support mechanism for schools and libraries are not subject to the requirements 47 U.S.C. 254(h) and (l), but must indicate, pursuant to the certification requirements in paragraph (c) of this section, that they only receive discounts for telecommunications services.

(c) *Certifications required under 47 U.S.C. 254(h) and (l)*—(1) *Schools*. The billed entity for a school that receives discounts for Internet access or internal connections must certify on FCC Form 486 that an Internet safety policy is being enforced. If the school is an eligible member of a consortium but is not the billed entity for the consortium, the school must certify instead on FCC Form 479 (''Certification to Consortium Leader of Compliance with the Children's Internet Protection Act'') that an Internet safety policy is being enforced.

(i) The Internet safety policy adopted and enforced pursuant to 47 U.S.C. 254(h) must include a technology protection measure that protects against Internet access by both adults and minors to visual depictions that are obscene, child pornography, or, with respect to use of the computers by minors, harmful to minors. The school must enforce the operation of the technology protection measure during use of its computers with Internet access, although an administrator, supervisor, or other person authorized by the certifying authority under paragraph (a)(1) of this section may disable the technology protection measure concerned, during use by an adult, to enable access for bona fide research or other lawful purpose. This Internet safety policy must also include monitoring the online activities of minors. Beginning July 1, 2012, schools' Internet safety policies must provide for educating minors about appropriate online behavior, including interacting with other individuals on social networking Web sites and in chat rooms and cyberbullying awareness and response.

(ii) The Internet safety policy adopted and enforced pursuant to 47 U.S.C.

254(l) must address all of the following issues:

(A) Access by minors to inappropriate matter on the Internet and World Wide Web,

(B) The safety and security of minors when using electronic mail, chat rooms, and other forms of direct electronic communications,

(C) Unauthorized access, including so-called ''hacking,'' and other unlawful activities by minors online;

(D) Unauthorized disclosure, use, and dissemination of personal information regarding minors; and

(E) Measures designed to restrict minors' access to materials harmful to minors.

(iii) A school must satisfy its obligations to make certifications by making one of the following certifications required by paragraph (c)(1) of this section on FCC Form 486:

(A) The recipient(s) of service represented in the Funding Request Number(s) on this Form 486 has (have) complied with the requirements of the Children's Internet Protection Act, as codified at 47 U.S.C. 254(h) and (l).

(B) Pursuant to the Children's Internet Protection Act, as codified at 47 U.S.C. 254(h) and (l), the recipient(s) of service represented in the Funding Request Number(s) on this Form 486, for whom this is the first funding year in the federal universal service support mechanism for schools and libraries, is (are) undertaking such actions, including any necessary procurement procedures, to comply with the requirements of CIPA for the next funding year, but has (have) not completed all requirements of CIPA for this funding year.

(C) The Children's Internet Protection Act, as codified at 47 U.S.C. 254(h) and (l), does not apply because the recipient(s) of service represented in the Funding Request Number(s) on this Form 486 is (are) receiving discount services only for telecommunications services.

(2) *Libraries*. The billed entity for a library that receives discounts for Internet access and internal connections must certify, on FCC Form 486, that an Internet safety policy is being enforced. If the library is an eligible member of a consortium but is not the billed entity for the consortium, the library must instead certify on FCC Form 479 (''Certification to Consortium Leader of Compliance with the Children's Internet Protection Act'') that an Internet safety policy is being enforced.

(i) The Internet safety policy adopted and enforced pursuant to 47 U.S.C. 254(h) must include a technology protection measure that protects against Internet access by both adults and minors to visual depictions that are obscene, child pornography, or, with respect to use of the computers by minors, harmful to minors. The library must enforce the operation of the technology protection measure during use of its computers with Internet access, although an administrator, supervisor, or other person authorized by the certifying authority under paragraph (a)(2) of this section may disable the technology protection measure concerned, during use by an adult, to enable access for bona fide research or other lawful purpose.

(ii) The Internet safety policy adopted and enforced pursuant to 47 U.S.C. 254(l) must address all of the following issues:

(A) Access by minors to inappropriate matter on the Internet and World Wide Web;

(B) The safety and security of minors when using electronic mail, chat rooms, and other forms of direct electronic communications;

(C) Unauthorized access, including so-called ''hacking,'' and other unlawful activities by minors online;

(D) Unauthorized disclosure, use, and dissemination of personal information regarding minors; and

(E) Measures designed to restrict minors' access to materials harmful to minors.

(iii) A library must satisfy its obligations to make certifications by making one of the following certifications required by paragraph (c)(2) of this section on FCC Form 486:

(A) The recipient(s) of service represented in the Funding Request Number(s) on this Form 486 has (have) complied with the requirements of the Children's Internet Protection Act, as codified at 47 U.S.C. 254(h) and (l).

(B) Pursuant to the Children's Internet Protection Act, as codified at 47

U.S.C. 254(h) and (l), the recipient(s) of service represented in the Funding Request Number(s) on this Form 486, for whom this is the first funding year in the federal universal service support mechanism for schools and libraries, is (are) undertaking such actions, including any necessary procurement procedures, to comply with the requirements of CIPA for the next funding year, but has (have) not completed all requirements of CIPA for this funding year.

(C) The Children's Internet Protection Act, as codified at 47 U.S.C. 254(h) and (l), does not apply because the recipient(s) of service represented in the Funding Request Number(s) on this Form 486 is (are) receiving discount services only for telecommunications services.

(3) *Certifications required from consortia members and billed entities for consortia.* (i) The billed entity of a consortium, as defined in paragraph (a)(3) of this section, other than one requesting only discounts on telecommunications services for consortium members, must collect from the authority for each of its school and library members, one of the following signed certifications on FCC Form 479 (''Certification to Consortium Leader of Compliance with the Children's Internet Protection Act''), which must be submitted to the billed entity consistent with paragraph (c)(1) or paragraph (c)(2) of this section:

(A) The recipient(s) of service under my administrative authority and represented in the Funding Request Number(s) for which you have requested or received Funding Commitments has (have) complied with the requirements of the Children's Internet Protection Act, as codified at 47 U.S.C. 254(h) and (l).

(B) Pursuant to the Children's Internet Protection Act, as codified at 47 U.S.C. 254(h) and (l), the recipient(s) of service under my administrative authority and represented in the Funding Request Number(s) for which you have requested or received Funding Commitments, and for whom this is the first funding year in the federal universal service support mechanism for schools and libraries, is (are) undertaking such actions, including any necessary procurement procedures, to comply with the requirements of CIPA for the next funding year, but has (have) not completed all requirements of CIPA for this funding year.

(C) The Children's Internet Protection Act, as codified at 47 U.S.C. 254(h) and (l), does not apply because the recipient(s) of service under my administrative authority and represented in the Funding Request Number(s) for which you have requested or received Funding Commitments is (are) receiving discount services only for telecommunications services; and

(ii) The billed entity for a consortium, as defined in paragraph (a)(3) of this section, must make one of the following two certifications on FCC Form 486: ''I certify as the Billed Entity for the consortium that I have collected duly completed and signed Forms 479 from all eligible members of the consortium.''; or I certify ''as the Billed Entity for the consortium that the only services that I have been approved for discounts under the universal service support on behalf of eligible members of the consortium are telecommunications services, and therefore the requirements of the Children's Internet Protection Act, as codified at 47 U.S.C. 254(h) and (l), do not apply.''; and

(iii) The billed entity for a consortium, as defined in paragraph (a)(3) of this section, who filed an FCC Form 471 as a ''consortium application'' and who is also a recipient of services as a member of that consortium must select one of the certifications under paragraph (c)(3)(i) of this section on FCC Form 486.

(4) *Local determination of content.* A determination regarding matter inappropriate for minors shall be made by the school board, local educational agency, library, or other authority responsible for making the determination. No agency or instrumentality of the United States Government may establish criteria for making such determination; review the determination made by the certifying school, school board, school district, local educational agency, library, or other authority; or consider the criteria employed by the certifying school, school board, school district, local educational agency, library, or other authority in the administration of the

schools and libraries universal service support mechanism.

(5) *Availability for review.* Each Internet safety policy adopted pursuant to 47 U.S.C. 254(l) shall be made available to the Commission, upon request from the Commission, by the school, school board, school district, local educational agency, library, or other authority responsible for adopting such Internet safety policy for purposes of the review of such Internet safety policy by the Commission.

(d) *Failure to provide certifications*—(1) *Schools and libraries.* A school or library that knowingly fails to submit certifications as required by this section, shall not be eligible for discount services under the federal universal service support mechanism for schools and libraries until such certifications are submitted.

(2) *Consortia.* A billed entity's knowing failure to collect the required certifications from its eligible school and library members or knowing failure to certify that it collected the required certifications shall render the entire consortium ineligible for discounts under the federal universal service support mechanism for school and libraries.

(3) *Reestablishing eligibility.* At any time, a school or library deemed ineligible for discount services under the federal universal service support mechanism for schools and libraries because of failure to submit certifications required by this section, may reestablish eligibility for discounts by providing the required certifications to the Administrator and the Commission.

(e) *Failure to comply with the certifications*—(1) *Schools and libraries.* A school or library that knowingly fails to ensure the use of computers in accordance with the certifications required by this section, must reimburse any funds and discounts received under the federal universal service support mechanism for schools and libraries for the period in which there was noncompliance.

(2) *Consortia.* In the case of consortium applications, the eligibility for discounts of consortium members who ensure the use of computers in accordance with the certification requirements of this section shall not be affected by the failure of other school or library consortium members to ensure the use of computers in accordance with such requirements.

(3) *Reestablishing compliance.* At any time, a school or library deemed ineligible for discounts under the federal universal service support mechanism for schools and libraries for failure to ensure the use of computers in accordance with the certification requirements of this section and that has been directed to reimburse the program for discounts received during the period of noncompliance, may reestablish compliance by ensuring the use of its computers in accordance with the certification requirements under this section. Upon submittal to the Commission of a certification or other appropriate evidence of such remedy, the school or library shall be eligible for discounts under the universal service mechanism.

(f) *Waivers based on state or local procurement rules and regulations and competitive bidding requirements.* Waivers shall be granted to schools and libraries when the authority responsible for making the certifications required by this section, cannot make the required certifications because its state or local procurement rules or regulations or competitive bidding requirements, prevent the making of the certification otherwise required. The waiver shall be granted upon the provision, by the authority responsible for making the certifications on behalf of schools or libraries, that the schools or libraries will be brought into compliance with the requirements of this section, for schools, before the start of the third program year after April 20, 2001 in which the school is applying for funds under this title, and, for libraries, before the start of Funding Year 2005 or the third program year after April 20, 2001, whichever is later.

(g) *Funding year certification deadlines.* For Funding Year 2003 and for subsequent funding years, billed entities shall provide one of the certifications required under paragraph (c)(1), (c)(2) or (c)(3) of this section on an FCC Form 486 in accordance with the existing program guidelines established by the Administrator.

(h) *Public notice; hearing or meeting.* A school or library shall provide reasonable public notice and hold at least one public hearing or meeting to address the proposed Internet safety policy.

[66 FR 19396, Apr. 16, 2001; 66 FR 22133, May 3, 2001, as amended at 67 FR 50603, Aug. 5, 2002; 68 FR 47255, Aug. 8, 2003; 76 FR 56303, Sept. 13, 2011]

§ 54.522 [Reserved]

§ 54.523 Payment for the non-discount portion of supported services.

An eligible school, library, or consortium must pay the non-discount portion of services or products purchased with universal service discounts. An eligible school, library, or consortium may not receive rebates for services or products purchased with universal service discounts. For the purpose of this rule, the provision, by the provider of a supported service, of free services or products unrelated to the supported service or product constitutes a rebate of the non-discount portion of the supported services.

[69 FR 6192, Feb. 10, 2004]

Subpart G—Universal Service Support for Health Care Providers

DEFINED TERMS AND ELIGIBILITY

§ 54.600 Terms and definitions.

As used in this subpart, the following terms shall be defined as follows:

(a) *Health care provider.* A ''health care provider'' is any:

(1) Post-secondary educational institution offering health care instruction, including a teaching hospital or medical school;

(2) Community health center or health center providing health care to migrants;

(3) Local health department or agency;

(4) Community mental health center;

(5) Not-for-profit hospital;

(6) Rural health clinic; or

(7) Consortium of health care providers consisting of one or more entities described in paragraphs (a)(1) through (a)(6) of this section.

(b) *Rural area.* (1) A ''rural area'' is an area that is entirely outside of a Core Based Statistical Area; is within a Core Based Statistical Area that does not have any Urban Area with a population of 25,000 or greater; or is in a Core Based Statistical Area that contains an Urban Area with a population of 25,000 or greater, but is within a specific census tract that itself does not contain any part of a Place or Urban Area with a population of greater than 25,000. For purposes of this rule, ''Core Based Statistical Area,'' ''Urban Area,'' and ''Place'' are as identified by the Census Bureau.

(2) Notwithstanding the definition of ''rural area,'' any health care provider that is located in a ''rural area'' under the definition used by the Commission prior to July 1, 2005, and received a funding commitment from the rural health care program prior to July 1, 2005, is eligible for support under this subpart.

(c) *Rural health care provider.* A ''rural health care provider'' is an eligible health care provider site located in a rural area.

[78 FR 13982, Mar. 1, 2013]

§ 54.601 Health care provider eligibility.

(a) *Eligible health care providers.* (1) Only an entity that is either a public or non-profit health care provider, as defined in this subpart, shall be eligible to receive support under this subpart.

(2) Each separate site or location of a health care provider shall be considered an individual health care provider for purposes of calculating and limiting support under this subpart.

(b) *Determination of health care provider eligibility for the Healthcare Connect Fund.* Health care providers in the Healthcare Connect Fund may certify to the eligibility of particular sites at any time prior to, or concurrently with, filing a request for services to initiate competitive bidding for the site. Applicants who utilize a competitive bidding exemption must provide eligibility information for the site to the Administrator prior to, or concurrently with, filing a request for funding for the site. Health care providers must also notify the Administrator within 30

days of a change in the health care provider's name, site location, contact information, or eligible entity type.

[78 FR 13982, Mar. 1, 2013]

§ 54.602 Health care support mechanism.

(a) *Telecommunications Program.* Rural health care providers may request support for the difference, if any, between the urban and rural rates for telecommunications services, subject to the provisions and limitations set forth in §§ 54.600 through 54.625 and §§ 54.671 through 54.680. This support is referred to as the ''Telecommunications Program.''

(b) *Healthcare Connect Fund.* Eligible health care providers may request support for eligible services, equipment, and infrastructure, subject to the provisions and limitations set forth in §§ 54.600 through 54.602 and §§ 54.630 through 54.680. This support is referred to as the ''Healthcare Connect Fund.''

(c) *Allocation of discounts.* An eligible health care provider that engages in both eligible and ineligible activities or that collocates with an ineligible entity shall allocate eligible and ineligible activities in order to receive prorated support for the eligible activities only. Health care providers shall choose a method of cost allocation that is based on objective criteria and reasonably reflects the eligible usage of the facilities.

(d) *Health care purposes.* Services for which eligible health care providers receive support from the Telecommunications Program or the Healthcare Connect Fund must be reasonably related to the provision of health care services or instruction that the health care provider is legally authorized to provide under the law in the state in which such health care services or instruction are provided.

[78 FR 13982, Mar. 1, 2013]

TELECOMMUNICATIONS PROGRAM

§ 54.603 Competitive bidding and certification requirements.

(a) *Competitive bidding requirement.* To select the telecommunications carriers that will provide services eligible for universal service support to it under the Telecommunications Program, each eligible health care provider shall participate in a competitive bidding process pursuant to the requirements established in this section and any additional and applicable state, Tribal, local, or other procurement requirements.

(b) *Posting of FCC Form 465.* (1) An eligible health care provider seeking to receive telecommunications services eligible for universal service support under the Telecommunications Program shall submit a completed FCC Form 465 to the Administrator. FCC Form 465 shall be signed by the person authorized to order telecommunications services for the health care provider and shall include, at a minimum, that person's certification under oath that:

(i) The requester is a public or nonprofit entity that falls within one of the seven categories set forth in the definition of health care provider, listed in § 54.600(a);

(ii) The requester is physically located in a rural area;

(iii) [Reserved]

(iv) The requested service or services will be used solely for purposes reasonably related to the provision of health care services or instruction that the health care provider is legally authorized to provide under the law in the state in which such health care services or instruction are provided;

(v) The requested service or services will not be sold, resold or transferred in consideration of money or any other thing of value; and

(vi) If the service or services are being purchased as part of an aggregated purchase with other entities or individuals, the full details of any such arrangement, including the identities of all co-purchasers and the portion of the service or services being purchased by the health care provider.

(2) The Rural Health Care Division shall post each FCC Form 465 that it receives from an eligible health care provider on its website designated for this purpose.

(3) After posting an eligible health care providers FCC Form 465 on the Rural Health Care Corporation website, the Rural Health Care Division shall send confirmation of the posting to the entity requesting services. The health

care provider shall wait at least 28 days from the date on which its FCC Form 465 is posted on the website before making commitments with the selected telecommunications carrier(s).

(4) After selecting a telecommunications carrier, the health care provider shall certify to the Rural Health Care Division that the provider is selecting the most cost-effective method of providing the requested service or services, where the most cost-effective method of providing a service is defined as the method that costs the least after consideration of the features, quality of transmission, reliability, and other factors that the health care provider deems relevant to choosing a method of providing the required health care services. The health care provider shall submit to the Administrator paper copies of the responses or bids received in response to the requested services.

(5) The confirmation from the Rural Health Care Division shall include the date after which the requester may sign a contract with its chosen telecommunications carrier(s).

[62 FR 32948, June 17, 1997, as amended at 62 FR 41304, Aug. 1, 1997; 63 FR 2131, Jan. 13, 1998; 68 FR 74502, Dec. 24, 2003; 78 FR 13983, Mar. 1, 2013]

§ 54.604 Consortia, telecommunications services, and existing contracts.

(a) *Consortia.* (1) Under the Telecommunications Program, an eligible health care provider may join a consortium with other eligible health care providers; with schools, libraries, and library consortia eligible under subpart F of this part; and with public sector (governmental) entities to order telecommunications services. With one exception, eligible health care providers participating in consortia with ineligible private sector members shall not be eligible for supported services under this subpart. A consortium may include ineligible private sector entities if such consortium is only receiving services at tariffed rates or at market rates from those providers who do not file tariffs.

(2) For consortia, universal service support under the Telecommunications Program shall apply only to the portion of eligible services used by an eligible health care provider.

(b) *Telecommunications Services.* Any telecommunications service that is the subject of a properly completed bona fide request by a rural health care provider shall be eligible for universal service support, subject to the limitations described in this paragraph. The length of a supported telecommunications service may not exceed the distance between the health care provider and the point farthest from that provider on the jurisdictional boundary of the largest city in a state as defined in § 54.625(a).

(c) *Existing contracts.* A signed contract for services eligible for Telecommunications Program support pursuant to this subpart between an eligible health care provider as defined under § 54.600 and a telecommunications carrier shall be exempt from the competitive bid requirements set forth in § 54.603(a) as follows:

(1) A contract signed on or before July 10, 1997 is exempt from the competitive bid requirement for the life of the contract.

(2) [Reserved]

(d) For rural health care providers that take service under or pursuant to a master contract, as defined in § 54.500(f), the date of execution of that master contract represents the applicable date for purposes of determining whether and to what extent the rural health care provider is exempt from the competitive bid requirements.

(e) The competitive bid system will be deemed to be operational when the Administrator is ready to accept and post FCC Form 465 from rural health care providers on a website and that website is available for use by telecommunications carriers.

[63 FR 2131, Jan. 13, 1998; 63 FR 33586, June 19, 1998, as amended at 63 FR 70572, Dec. 21, 1998; 64 FR 22810, Apr. 28, 1999; 71 FR 65750, Nov. 9, 2006; 78 FR 13983, Mar. 1, 2013]

§ 54.605 Determining the urban rate.

(a) If a rural health care provider requests support for an eligible service to be funded from the Telecommunications Program that is to be provided over a distance that is less than or equal to the ''standard urban distance,'' as defined in paragraph (c) of

this section, for the state in which it is located, the ''urban rate'' for that service shall be a rate no higher than the highest tariffed or publicly-available rate charged to a commercial customer for a functionally similar service in any city with a population of 50,000 or more in that state, calculated as if it were provided between two points within the city.

(b) If a rural health care provider requests an eligible service to be provided over a distance that is greater than the ''standard urban distance,'' as defined in paragraph (c) of this section, for the state in which it is located, the urban rate for that service shall be a rate no higher than the highest tariffed or publicly-available rate charged to a commercial customer for a functionally similar service provided over the standard urban distance in any city with a population of 50,000 or more in that state, calculated as if the service were provided between two points within the city.

(c) The ''standard urban distance'' for a state is the average of the longest diameters of all cities with a population of 50,000 or more within the state.

(d) The Administrator shall calculate the ''standard urban distance'' and shall post the ''standard urban distance'' and the maximum supported distance for each state on its website.

[62 FR 32948, June 17, 1997, as amended at 63 FR 2131, Jan. 13, 1998; 63 FR 70572, Dec. 21, 1998; 68 FR 74502, Dec. 24, 2003; 78 FR 13983, Mar. 1, 2013]

§ 54.607 Determining the rural rate.

(a) The rural rate shall be the average of the rates actually being charged to commercial customers, other than health care providers, for identical or similar services provided by the telecommunications carrier providing the service in the rural area in which the health care provider is located. The rates included in this average shall be for services provided over the same distance as the eligible service. The rates averaged to calculate the rural rate must not include any rates reduced by universal service support mechanisms. The ''rural rate'' shall be used as described in this subpart to determine the credit or reimbursement due to a telecommunications carrier that provides eligible telecommunications services to eligible health care providers.

(b) If the telecommunications carrier serving the health care provider is not providing any identical or similar services in the rural area, then the rural rate shall be the average of the tariffed and other publicly available rates, not including any rates reduced by universal service programs, charged for the same or similar services in that rural area over the same distance as the eligible service by other carriers. If there are no tariffed or publicly available rates for such services in that rural area, or if the carrier reasonably determines that this method for calculating the rural rate is unfair, then the carrier shall submit for the state commission's approval, for intrastate rates, or the Commission's approval, for interstate rates, a cost-based rate for the provision of the service in the most economically efficient, reasonably available manner.

(1) The carrier must provide, to the state commission, or intrastate rates, or to the Commission, for interstate rates, a justification of the proposed rural rate, including an itemization of the costs of providing the requested service.

(2) The carrier must provide such information periodically thereafter as required, by the state commission for intrastate rates or the Commission for interstate rates. In doing so, the carrier must take into account anticipated and actual demand for telecommunications services by all customers who will use the facilities over which services are being provided to eligible health care providers.

§ 54.609 Calculating support.

(a) The amount of universal service support provided for an eligible service to be funded from the Telecommunications Program shall be the difference, if any, between the urban rate and the rural rate charged for the service, as defined herein. In addition, all reasonable charges that are incurred by taking such services, such as state and federal taxes shall be eligible for universal service support. Charges for

termination liability, penalty surcharges, and other charges not included in the cost of taking such service shall not be covered by the universal service support mechanisms. Under the Telecommunications Program, rural health care providers may choose one of the following two support options.

(1) *Distance based support.* The Administrator shall consider the base rates for telecommunications services in rural areas to be reasonably comparable to the base rates charged for functionally similar telecommunications service in urban areas in that state, and, therefore, the Administrator shall not include these charges in calculating the support. The Administrator shall include, in the support calculation, all other charges specified, and all actual distance-based charges as follows:

(i) If the requested service distance is less than or equal to the SUD for the state, the distance-based charges for the rural health care provider are reasonably comparable to those in urban areas, so the health care provider will not receive distance-based support.

(ii) If the requested service distance is greater than the SUD for the state, but less than the maximum allowable distance, the distance-based charge actually incurred for that service can be no higher than the distance-based charges for a functionally similar service in any city in that state with a population of 50,000 or more over the SUD.

(iii) ''Distance-based charges'' are charges based on a unit of distance, such as mileage-based charges.

(iv) A telecommunications carrier that provides telecommunications service to a rural health care provider participating in an eligible health care consortium, and the consortium must establish the actual distance-based charges for the health care provider's portion of the shared telecommunications services.

(2) *Base rate support.* If a telecommunications carrier, health care provider, and/or consortium of health care providers reasonably determines that the base rates for telecommunications services in rural areas are not reasonably comparable to the base rates charged for functionally similar telecommunications service in urban areas in that state, the telecommunications carrier, health care provider, and/or consortium of health care providers may request that the Administrator perform a more comprehensive support calculation. The requester shall provide to the Administrator the information to establish both the urban and rural rates consistent with § 54.605 and § 54.607, and submit to the Administrator with Form 466 all of the documentation necessary to substantiate the request.

(3) *Base rate support-consortium.* A telecommunications carrier that provides telecommunications service to a rural health care provider participating in an eligible health care consortium, and the consortium must establish the applicable rural base rates for telecommunications service for the health care provider's portion of the shared telecommunications services, as well as the applicable urban base rates for the telecommunications service.

(b) Absent documentation justifying the amount of universal service support requested for health care providers participating in a consortium, the Administrator shall not allow telecommunications carriers to offset, or receive reimbursement for, the amount eligible for universal service support.

(c) The universal service support mechanisms shall provide support for intrastate telecommunications services, as set forth in § 54.101(a), provided to rural health care providers as well as interstate telecommunications services.

(d) *Satellite services.*(1) Rural public and non-profit health care providers may receive support for rural satellite services under the Telecommunications Program, even when another functionally similar terrestrial-based service is available in that rural area. Support for satellite services shall be capped at the amount the rural health care provider would have received if they purchased a functionally similar terrestrial-based alternative.

(2) Rural health care providers seeking support from the Telecommunications Program for satellite services shall provide to the Administrator with the Form 466, documentation of

the urban and rural rates for the terrestrial-based alternatives.

(3) Where a rural health care provider seeks a more expensive satellite-based service when a less expensive terrestrial-based alternative is available, the rural health care provider shall be responsible for the additional cost.

(e) *Mobile rural health care providers*—(1) *Calculation of support*. The support amount allowed under the Telecommunications Program for satellite services provided to mobile rural health care providers is calculated by comparing the rate for the satellite service to the rate for an urban wireline service with a similar bandwidth. Support for satellite services shall not be capped at an amount of a functionally similar wireline alternative. Where the mobile rural health care provider provides service in more than one state, the calculation shall be based on the urban areas in each state, proportional to the number of locations served in each state.

(2) *Documentation of support*. (i) Mobile rural health care providers shall provide to the Administrator documentation of the price of bandwidth equivalent wireline services in the urban area in the state or states where the service is provided. Mobile rural health care providers shall provide to the Administrator the number of sites the mobile health care provider will serve during the funding year.

(ii) Where a mobile rural health care provider serves less than eight different sites per year, the mobile rural health care provider shall provide to the Administrator documentation of the price of bandwidth equivalent wireline services. In such case, the Administrator shall determine on a case-by-case basis whether the telecommunications service selected by the mobile rural health care provider is the most cost-effective option. Where a mobile rural health care provider seeks a more expensive satellite-based service when a less expensive wireline alternative is most cost-effective, the mobile rural health care provider shall be responsible for the additional cost.

[68 FR 74502, Dec. 24, 2003, as amended at 70 FR 6373, Feb. 7, 2005; 78 FR 13983, Mar. 1, 2013]

§ 54.613 Limitations on supported services for rural health care providers.

(a) Upon submitting a bona fide request to a telecommunications carrier, each eligible rural health care provider is entitled to receive the most cost-effective, commercially-available telecommunications service at a rate no higher than the highest urban rate, as defined in § 54.605, at a distance not to exceed the distance between the eligible health care provider's site and the farthest point on the jurisdictional boundary of the city in that state with the largest population.

(b) [Reserved]

[64 FR 66787, Nov. 30, 1999, as amended at 68 FR 74503, Dec. 24, 2003; 78 FR 13984, Mar. 1, 2013]

§ 54.615 Obtaining services.

(a) *Selecting a provider*. In selecting a telecommunications carrier, a health care provider shall consider all bids submitted and select the most cost-effective alternative.

(b) *Receiving supported rate*. Upon receiving a bona fide request, as defined in paragraph (c) of this section, from a rural health care provider for a telecommunications service that is eligible for support under the Telecommunications Program, a telecommunications carrier shall provide the service at a rate no higher than the urban rate, as defined in § 54.605, subject to the limitations applicable to the Telecommunications Program.

(c) *Bona fide request*. In order to receive services eligible for support under the Telecommunications Program, an eligible health care provider must submit a request for services to the telecommunications carrier, signed by an authorized officer of the health care provider, and shall include that person's certification under oath that:

(1) The requester is a public or nonprofit entity that falls within one of the seven categories set forth in the definition of health care provider, listed in § 54.601(a);

(2) The requester is physically located in a rural area, or if the requester is a mobile rural health care provider requesting services under

§ 54.609(e), that the requester has certified that it is serving eligible rural areas;

(3) [Reserved]

(4) The requested service or services will be used solely for purposes reasonably related to the provision of health care services or instruction that the health care provider is legally authorized to provide under the law in the state in which such health care services or instruction are provided;

(5) The requested service or services will not be sold, resold or transferred in consideration of money or any other thing of value;

(6) If the service or services are being purchased as part of an aggregated purchase with other entities or individuals, the full details of any such arrangement, including the identities of all co-purchasers and the portion of the service or services being purchased by the health care provider; and

(7) The requester is selecting the most cost-effective method of providing the requested service or services, where the most cost-effective method of providing a service is defined as the method that costs the least after consideration of the features, quality of transmission, reliability, and other factors that the health care provider deems relevant to choosing a method of providing the required health care services.

(d) *Annual renewal.* The certification set forth in paragraph (c) of this section shall be renewed annually.

[62 FR 32948, June 17, 1997, as amended at 70 FR 6373, Feb. 7, 2005; 78 FR 13984, Mar. 1, 2013]

§ 54.619 Audits and recordkeeping.

(a) *Health care providers.* (1) Health care providers shall maintain for their purchases of services supported under the Telecommunications Program documentation for five years from the end of the funding year sufficient to establish compliance with all rules in this subpart. Documentation must include, among other things, records of allocations for consortia and entities that engage in eligible and ineligible activities, if applicable. Mobile rural health care providers shall maintain annual logs indicating: The date and locations of each clinic stop; and the number of patients served at each such clinic stop.

(2) Mobile rural health care providers shall maintain its annual logs for a period of five years. Mobile rural health care providers shall make its logs available to the Administrator and the Commission upon request.

(b) *Production of records.* Health care providers shall produce such records at the request of any auditor appointed by the Administrator or any other state or federal agency with jurisdiction.

(c) *Random audits.* Health care providers shall be subject to random compliance audits to ensure that requesters are complying with the certification requirements set forth in § 54.615(c) and are otherwise eligible to receive universal service support and that rates charged comply with the statute and regulations.

(d) *Service providers.* Service providers shall retain documents related to the delivery of discounted services under the Telecommunications Program for at least 5 years after the last day of the delivery of discounted services. Any other document that demonstrates compliance with the statutory or regulatory requirements for the rural health care mechanism shall be retained as well.

[68 FR 74503, Dec. 24, 2003, as amended at 69 FR 12087, Mar. 15, 2004; 70 FR 6373, Feb. 7, 2005; 71 FR 13281, Mar. 15, 2006; 72 FR 54218, Sept. 24, 2007; 78 FR 13984, Mar. 1, 2013]

§ 54.623 Annual filing and funding commitment requirement.

(a) *Annual filing requirement.* Health care providers seeking support under the Telecommunications Program shall file new funding requests for each funding year.

(b) *Long term contracts.* Under the Telecommunications Program, if health care providers enter into long term contracts for eligible services, the Administrator shall only commit funds to cover the portion of such a long term contract scheduled to be delivered during the funding year for which universal service support is sought.

[78 FR 13984, Mar. 1, 2013]

§ 54.625 Support for telecommunications services beyond the maximum supported distance for rural health care providers.

(a) The maximum support distance for the Telecommunications Program is the distance from the health care provider to the farthest point on the jurisdictional boundary of the city in that state with the largest population, as calculated by the Administrator.

(b) An eligible rural health care provider may purchase an eligible telecommunications service supported under the Telecommunications Program that is provided over a distance that exceeds the maximum supported distance.

(c) If an eligible rural health care provider purchases an eligible telecommunications service supported under the Telecommunications Program that exceeds the maximum supported distance, the health care provider must pay the applicable rural rate for the distance that such service is carried beyond the maximum supported distance.

[78 FR 13984, Mar. 1, 2013]

HEALTHCARE CONNECT FUND

§ 54.630 Eligible recipients.

(a) *Rural health care provider site—individual and consortium.* Under the Healthcare Connect Fund, an eligible rural health care provider may receive universal service support by applying individually or through a consortium. For purposes of the Healthcare Connect Fund, a ''consortium'' is a group of two or more health care provider sites that request support through a single application. Consortia may include health care providers who are not eligible for support under the Healthcare Connect Fund, but such health care providers cannot receive support for their expenses and must participate pursuant to the cost allocation guidelines in § 54.639(d).

(b) *Limitation on participation of non-rural health care provider sites in a consortium.* An eligible non-rural health care provider site may receive universal service support only as part of a consortium that includes more than 50 percent eligible rural health care provider sites.

(c) *Limitation on large non-rural hospitals.* Each eligible non-rural public or non-profit hospital site with 400 or more licensed patient beds may receive no more than $30,000 per year in Healthcare Connect Fund support for eligible recurring charges and no more than $70,000 in Healthcare Connect Fund support every 5 years for eligible nonrecurring charges, exclusive in both cases of costs shared by the network.

[78 FR 13984, Mar. 1, 2013]

§ 54.631 Designation of Consortium Leader.

(a) *Identifying a Consortium Leader.* Each consortium seeking support from the Healthcare Connect Fund must identify an entity or organization that will be the lead entity (the ''Consortium Leader'').

(b) *Consortium Leader eligibility.* The Consortium Leader may be the consortium itself (if it is a distinct legal entity); an eligible health care provider participating in the consortium; or a state organization, public sector (governmental) entity (including a Tribal government entity), or non-profit entity that is ineligible for Healthcare Connect Fund support. Ineligible state organizations, public sector entities, or non-profit entities may serve as Consortium Leaders or provide consulting assistance to consortia only if they do not participate as potential vendors during the competitive bidding process. An ineligible entity that serves as the Consortium Leader must pass on the full value of any discounts, funding, or other program benefits secured to the consortium members that are eligible health care providers.

(c) *Consortium Leader responsibilities.* The Consortium Leader's responsibilities include the following:

(1) *Legal and financial responsibility for supported activities.* The Consortium Leader is the legally and financially responsible entity for the activities supported by the Healthcare Connect Fund. By default, the Consortium Leader is the responsible entity if audits or other investigations by Administrator or the Commission reveal violations of the Act or Commission rules, with individual consortium members being jointly and severally liable if the Consortium Leader dissolves, files for

bankruptcy, or otherwise fails to meet its obligations. Except for the responsibilities specifically described in paragraphs (c)(2) through (c)(6) of this section, consortia may allocate legal and financial responsibility as they see fit, provided that this allocation is memorialized in a formal written agreement between the affected parties (*i.e.*, the Consortium Leader, and the consortium as a whole and/or its individual members), and the written agreement is submitted to the Administrator for approval with or prior to the Request for Services. Any such agreement must clearly identify the party(ies) responsible for repayment if the Administrator is required, at a later date, to recover disbursements to the consortium due to violations of program rules.

(2) *Point of contact for the FCC and Administrator*. The Consortium Leader is responsible for designating an individual who will be the ''Project Coordinator'' and serve as the point of contact with the Commission and the Administrator for all matters related to the consortium. The Consortium Leader is responsible for responding to Commission and Administrator inquiries on behalf of the consortium members throughout the application, funding, invoicing, and post-invoicing period.

(3) *Typical applicant functions, including forms and certifications*. The Consortium Leader is responsible for submitting program forms and required documentation and ensuring that all information and certifications submitted are true and correct. The Consortium Leader must also collect and retain a Letter of Agency (LOA) from each member, pursuant to § 54.632.

(4) *Competitive bidding and cost allocation*. The Consortium Leader is responsible for ensuring that the competitive bidding process is fair and open and otherwise complies with Commission requirements. If costs are shared by both eligible and ineligible entities, the Consortium Leader must ensure that costs are allocated in a manner that ensures that only eligible entities receive the benefit of program discounts.

(5) *Invoicing*. The Consortium Leader is responsible for notifying the Administrator when supported services have commenced and for submitting invoices to the Administrator.

(6) *Recordkeeping, site visits, and audits*. The Consortium Leader is also responsible for compliance with the Commission's recordkeeping requirements and for coordinating site visits and audits for all consortium members.

[78 FR 13985, Mar. 1, 2013]

§ 54.632 Letters of agency (LOA).

(a) *Authorizations*. Under the Healthcare Connect Fund, the Consortium Leader must obtain the following authorizations.

(1) Prior to the submission of the request for services, the Consortium Leader must obtain authorization, the necessary certifications, and any supporting documentation from each consortium member to permit the Consortium Leader to submit the request for services and prepare and post the request for proposal on behalf of the member.

(2) Prior to the submission of the funding request, the Consortium Leader must secure authorization, the necessary certifications, and any supporting documentation from each consortium member to permit the Consortium Leader to submit the funding request and manage invoicing and payments on behalf of the member.

(b) *Optional two-step process*. The Consortium Leader may secure both required authorizations from each consortium member in either a single LOA or in two separate LOAs.

(c) *Required Information in LOA*. (1) An LOA must include, at a minimum, the name of the entity filing the application (*i.e.*, lead applicant or Consortium Leader); name of the entity authorizing the filing of the application (*i.e.*, the participating health care provider/consortium member); the physical location of the health care provider/consortium member site(s); the relationship of each site seeking support to the lead entity filing the application; the specific timeframe the LOA covers; the signature, title and contact information (including phone number, mailing address, and email address) of an official who is authorized to act on behalf of the health care provider/consortium member; signature date; and

the type of services covered by the LOA.

(2) For HCPs located on Tribal lands, if the health care facility is a contract facility that is run solely by the tribe, the appropriate tribal leader, such as the tribal chairperson, president, or governor, shall also sign the LOA, unless the health care responsibilities have been duly delegated to another tribal government representative.

[78 FR 13985, Mar. 1, 2013]

§ 54.633 Health care provider contribution.

(a) *Health care provider contribution.* All health care providers receiving support under the Healthcare Connect Fund shall receive a 65 percent discount on the cost of eligible expenses and shall be required to contribute 35 percent of the total cost of all eligible expenses.

(b) *Limits on eligible sources of health care provider contribution.* Only funds from eligible sources may be applied toward the health care provider's required contribution.

(1) Eligible sources include the applicant or eligible health care provider participants; state grants, funding, or appropriations; federal funding, grants, loans, or appropriations except for other federal universal service funding; Tribal government funding; and other grant funding, including private grants.

(2) Ineligible sources include (but are not limited to) in-kind or implied contributions from health care providers; direct payments from vendors or other service providers, including contractors and consultants to such entities; and for-profit entities.

(c) *Disclosure of health care provider contribution source.* Prior to receiving support, applicants are required to identify with specificity their sources of funding for their contribution of eligible expenses.

(d) *Future revenues from excess capacity as source of health care provider contribution.* A consortium applicant that receives support for participant-owned network facilities under § 54.636 may use future revenues from excess capacity as a source for the required health care provider contribution, subject to the following limitations.

(1) The consortium's selection criteria and evaluation for ''cost-effectiveness'' pursuant to § 54.642 cannot provide a preference to bidders that offer to construct excess capacity.

(2) The applicant must pay the full amount of the additional costs for excess capacity facilities that will not be part of the supported health care network.

(3) The additional cost of constructing excess capacity facilities may not count toward a health care provider's required contribution.

(4) The inclusion of excess capacity facilities cannot increase the funded cost of the dedicated health care network in any way.

(5) An eligible health care provider (typically the consortium, although it may be an individual health care provider participating in the consortium) must retain ownership of the excess capacity facilities. It may make the facilities available to third parties only under an indefeasible right of use (IRU) or lease arrangement. The lease or IRU between the participant and the third party must be an arm's length transaction. To ensure that this is an arm's length transaction, neither the vendor that installs the excess capacity facilities nor its affiliate is eligible to enter into an IRU or lease with the participant.

(6) Any amount prepaid for use of the excess capacity facilities (IRU or lease) must be placed in an escrow account. The participant can then use the escrow account as an eligible source of funds for the participant's 35 percent contribution to the project.

(7) All revenues from use of the excess capacity facilities by the third party must be used for the health care provider contribution or for sustainability of the health care network supported by the Healthcare Connect Fund. Network costs that may be funded with any additional revenues that remain include administration, equipment, software, legal fees, or other costs not covered by the Healthcare Connect Fund, as long as they are relevant to sustaining the network.

[78 FR 13985, Mar. 1, 2013]

§ 54.634 Eligible services.

(a) *Eligible services.* Subject to the provisions of §§ 54.600 through 54.602 and §§ 54.630 through 54.680, eligible health care providers may request support from the Healthcare Connect Fund for any advanced telecommunications or information service that enables health care providers to post their own data, interact with stored data, generate new data, or communicate, by providing connectivity over private dedicated networks or the public Internet for the provision of health information technology.

(b) *Eligibility of dark fiber.* A consortium of eligible health care providers may receive support for ''dark'' fiber where the customer, not the vendor, provides the modulating electronics, subject to the following limitations:

(1) Support for recurring charges associated with dark fiber is only available once the dark fiber is ''lit'' and actually being used by the health care provider. Support for non-recurring charges for dark fiber is only available for fiber lit within the same funding year, but applicants may receive up to a one-year extension to light fiber if they provide documentation to the Administrator that construction was unavoidably delayed due to weather or other reasons.

(2) Requests for proposals (RFPs) that solicit dark fiber solutions must also solicit proposals to provide the needed services over lit fiber over a time period comparable to the duration of the dark fiber lease or indefeasible right of use.

(3) If an applicant intends to request support for equipment and maintenance costs associated with lighting and operating dark fiber, it must include such elements in the same RFP as the dark fiber so that the Administrator can review all costs associated with the fiber when determining whether the applicant chose the most cost-effective bid.

(c) *Dark and lit fiber maintenance costs.* (1) Both individual and consortium applicants may receive support for recurring maintenance costs associated with leases of dark or lit fiber.

(2) Consortium applicants may receive support for upfront payments for maintenance costs associated with leases of dark or lit fiber, subject to the limitations in § 54.638.

(d) *Reasonable and customary installation charges.* Eligible health care providers may obtain support for reasonable and customary installation charges for eligible services, up to an undiscounted cost of $5,000 per eligible site.

(e) *Upfront charges for vendor deployment of new or upgraded facilities.* (1) Participants may obtain support for upfront charges for vendor deployment of new or upgraded facilities to serve eligible sites.

(2) Support is available to extend vendor deployment of facilities up to the ''demarcation point,'' which is the boundary between facilities owned or controlled by the vendor, and facilities owned or controlled by the customer.

[78 FR 13986, Mar. 1, 2013]

§ 54.635 Eligible equipment.

(a) Both individual and consortium applicants may receive support for network equipment necessary to make functional an eligible service that is supported under the Healthcare Connect Fund.

(b) Consortium applicants may also receive support for network equipment necessary to manage, control, or maintain an eligible service or a dedicated health care broadband network. Support for network equipment is not available for networks that are not dedicated to health care.

(c) Network equipment eligible for support includes the following:

(1) Equipment that terminates a carrier's or other provider's transmission facility and any router/switch that is directly connected to either the facility or the terminating equipment. This includes equipment required to light dark fiber, or equipment necessary to connect dedicated health care broadband networks or individual health care providers to middle mile or backbone networks;

(2) Computers, including servers, and related hardware (*e.g.* printers, scanners, laptops) that are used exclusively for network management;

(3) Software used for network management, maintenance, or other network operations, and development of

software that supports network management, maintenance, and other network operations;

(4) Costs of engineering, furnishing (*i.e.* as delivered from the manufacturer), and installing network equipment; and

(5) Equipment that is a necessary part of health care provider-owned network facilities.

(d) Additional limitations: Support for network equipment is limited to equipment:

(1) Purchased or leased by a Consortium Leader or eligible health care provider; and

(2) Used for health care purposes.

[78 FR 13986, Mar. 1, 2013]

§ 54.636 Eligible participant-constructed and owned network facilities for consortium applicants.

(a) Subject to the funding limitations under §§ 54.675 and 54.638 and the following restrictions, consortium applicants may receive support for network facilities that will be constructed and owned by the consortium (if the consortium is an eligible health care provider) or eligible health care providers within the consortium.

(1) Consortia seeking support to construct and own network facilities are required to solicit bids for both:

(i) Services provided over third-party networks; and

(ii) Construction of participant-owned network facilities, in the same request for proposals. Requests for proposals must provide sufficient detail so that cost-effectiveness can be evaluated over the useful life of the proposed network facility to be constructed.

(2) Support for participant-constructed and owned network facilities is only available where the consortium demonstrates that constructing its own network facilities is the most cost-effective option after competitive bidding, pursuant to § 54.642.

(b) [Reserved]

[78 FR 13987, Mar. 1, 2013]

§ 54.637 Off-site data centers and off-site administrative offices.

(a) The connections and network equipment associated with off-site data centers and off-site administrative offices used by eligible health care providers for their health care purposes are eligible for support under the Healthcare Connect Fund, subject to the conditions and restrictions set forth in paragraph (b) of this section.

(1) An ''off-site administrative office'' is a facility that does not provide hands-on delivery of patient care, but performs administrative support functions that are critical to the provision of clinical care by eligible health care providers.

(2) An ''off-site data center'' is a facility that serves as a centralized repository for the storage, management, and dissemination of an eligible health care provider's computer systems, associated components, and data, including (but not limited to) electronic health records.

(b) *Conditions and Restrictions.* The following conditions and restrictions apply to support provided under this sections.

(1) Connections eligible for support are only those that are between:

(i) Eligible health care provider sites and off-site data centers or off-site administrative offices,

(ii) Two off-site data centers,

(iii) Two off-site administrative offices,

(iv) An off-site data center and the public Internet or another network,

(v) An off-site administrative office and the public Internet or another network, or

(vi) An off-site administrative office and an off-site data center.

(2) The supported connections and network equipment must be used solely for health care purposes.

(3) The supported connections and network equipment must be purchased by an eligible health care provider or a public or non-profit health care system that owns and operates eligible health care provider sites.

(4) If traffic associated with one or more ineligible health care provider sites is carried by the supported connection and/or network equipment, the ineligible health care provider sites must allocate the cost of that connection and/or equipment between eligible and ineligible sites, consistent with the ''fair share'' principles set forth in § 54.639(d).

[78 FR 13987, Mar. 1, 2013]

§ 54.638 Upfront payments.

(a) Upfront payments include all nonrecurring costs for services, equipment, or facilities, other than reasonable and customary installation charges of up to $5,000.

(b) The following limitations apply to all upfront payments:

(1) Upfront payments associated with services providing a bandwidth of less than 1.5 Mbps (symmetrical) are not eligible for support.

(2) Only consortium applicants are eligible for support for upfront payments.

(c) The following limitations apply if a consortium makes a request for support for upfront payments that exceeds, on average, $50,000 per eligible site in the consortium:

(1) The support for the upfront payments must be prorated over at least three years.

(2) The upfront payments must be part of a multi-year contract.

[78 FR 13987, Mar. 1, 2013]

§ 54.639 Ineligible expenses.

(a) Equipment or services not directly associated with eligible services. Expenses associated with equipment or services that are not necessary to make an eligible service functional, or to manage, control, or maintain an eligible service or a dedicated health care broadband network are ineligible for support.

NOTE TO PARAGRAPH (a): The following are examples of ineligible expenses:

1. Costs associated with general computing, software, applications, and Internet content development are not supported, including the following:

i. Computers, including servers, and related hardware (*e.g.*, printers, scanners, laptops), unless used exclusively for network management, maintenance, or other network operations;

ii. End user wireless devices, such as smartphones and tablets;

iii. Software, unless used for network management, maintenance, or other network operations;

iv. Software development (excluding development of software that supports network management, maintenance, and other network operations);

v. Helpdesk equipment and related software, or services, unless used exclusively in support of eligible services or equipment;

vi. Web server hosting;

vii. Web site portal development;

viii. Video/audio/web conferencing equipment or services; and

ix. Continuous power source.

2. Costs associated with medical equipment (hardware and software), and other general health care provider expenses are not supported, including the following:

i. Clinical or medical equipment;

ii. Telemedicine equipment, applications, and software;

iii. Training for use of telemedicine equipment;

iv. Electronic medical records systems; and

v. Electronic records management and expenses.

(b) *Inside wiring/internal connections.* Expenses associated with inside wiring or internal connections are ineligible for support under the Healthcare Connect Fund.

(c) *Administrative expenses.* Administrative expenses are not eligible for support under the Healthcare Connect Fund.

NOTE TO PARAGRAPH (c): Ineligible administrative expenses include, but not limited to, the following expenses:

1. Personnel costs (including salaries and fringe benefits), except for personnel expenses in a consortium application that directly relate to designing, engineering, installing, constructing, and managing a dedicated broadband network. Ineligible costs of this category include, for example, personnel to perform program management and coordination, program administration, and marketing;

2. Travel costs, except for travel costs that are reasonable and necessary for network design or deployment and that are specifically identified and justified as part of a competitive bid for a construction project;

3. Legal costs;

4. Training, except for basic training or instruction directly related to and required for broadband network installation and associated network operations;

5. Program administration or technical coordination (*e.g.*, preparing application materials, obtaining letters of agency, preparing request for proposals, negotiating with vendors, reviewing bids, and working with the Administrator) that involves anything other than the design, engineering, operations, installation, or construction of the network;

6. Administration and marketing costs (*e.g.*, administrative costs; supplies and materials, except as part of network installation/construction; marketing studies, marketing activities, or outreach to potential network members; evaluation and feedback studies);

7. Billing expenses (*e.g.*, expense that vendors may charge for allocating costs to each health care provider in a network);

8. Helpdesk expenses (*e.g.*, equipment and related software, or services); and

9. Technical support services that provide more than basic maintenance.

(d) *Cost allocation for ineligible sites, services, or equipment*—(1) *Ineligible sites.* Eligible health care provider sites may share expenses with ineligible sites, as long as the ineligible sites pay their fair share of the expenses. An applicant may seek support for only the portion of a shared eligible expense attributable to eligible health care provider sites. To receive support, the applicant must ensure that ineligible sites pay their fair share of the expense. The fair share is determined as follows:

(i) If the vendor charges a separate and independent price for each site, an ineligible site must pay the full undiscounted price.

(ii) If there is no separate and independent price for each site, the applicant must prorate the undiscounted price for the ''shared'' service, equipment, or facility between eligible and ineligible sites on a proportional fully-distributed basis. Applicants must make this cost allocation using a method that is based on objective criteria and reasonably reflects the eligible usage of the shared service, equipment, or facility. The applicant bears the burden of demonstrating the reasonableness of the allocation method chosen.

(2) *Ineligible components of a single service or piece of equipment.* Applicants seeking support for a service or piece of equipment that includes an ineligible component must explicitly request in their requests for proposals that vendors include pricing for a comparable service or piece of equipment that is comprised of only eligible components. If the selected provider also submits a price for the eligible component on a stand-alone basis, the support amount is calculated based on the stand-alone price of the eligible component on a stand-alone basis. If the vendor does not offer the eligible component on a stand-alone basis, the full price of the entire service or piece of equipment must be taken into account, without regard to the value of the ineligible components, when determining the most cost-effective bid.

(3) *Written description.* Applicants must submit a written description of their allocation method(s) to the Administrator with their funding requests.

(4) *Written agreement.* If ineligible entities participate in a network, the allocation method must be memorialized in writing, such as a formal agreement among network members, a master services contract, or for smaller consortia, a letter signed and dated by all (or each) ineligible entity and the Consortium Leader.

[78 FR 13987, Mar. 1, 2013]

§ 54.640 Eligible vendors.

(a) *Eligibility.* For purposes of the Healthcare Connect Fund, eligible vendors shall include any provider of equipment, facilities, or services that are eligible for support under Healthcare Connect Fund.

(b) *Obligation to assist health care providers.* Vendors in the Healthcare Connect Fund must certify, as a condition of receiving support, that they will provide to health care providers, on a timely basis, all information and documents regarding supported equipment, facilities, or services that are necessary for the health care provider to submit required forms or respond to Commission or Administrator inquiries. The Administrator may withhold disbursements for the vendor if the vendor, after written notice from the Administrator, fails to comply with this requirement.

[78 FR 13988, Mar. 1, 2013]

§ 54.642 Competitive bidding requirement and exemptions.

(a) *Competitive bidding requirement.* All applicants are required to engage in a competitive bidding process for supported services, facilities, or equipment consistent with the requirements set forth in this subpart, unless they qualify for one or more of the exemptions in paragraph (h) of this section. In addition, applicants may engage in competitive bidding even if they qualify for an exemption. Applicants who

utilize a competitive bidding exemption may proceed directly to filing a funding request as described in § 54.643.

(b) *Fair and open process.* (1) All entities participating in the Healthcare Connect Fund must conduct a fair and open competitive bidding process, consistent with all applicable requirements.

(2) Vendors who intend to bid to provide supported services, equipment, or facilities to a health care provider may not simultaneously help the health care provider choose a winning bid. Any vendor who submits a bid, and any individual or entity that has a financial interest in such a vendor, is prohibited from:

(i) Preparing, signing or submitting an applicant's request for services;

(ii) Serving as the Consortium Leader or other point of contact on behalf of applicant(s);

(iii) Being involved in setting bid evaluation criteria; or

(iv) Participating in the bid evaluation or vendor selection process (except in their role as potential vendors).

(3) All potential bidders must have access to the same information and must be treated in the same manner.

(4) All applicants and vendors must comply with any applicable state, Tribal, or local competitive bidding requirements. The competitive bidding requirements in this section apply in addition to state, Tribal, and local competitive bidding requirements and are not intended to preempt such state, Tribal, or local requirements.

(c) *Cost-effective.* For purposes of the Healthcare Connect Fund, ''cost-effective'' is defined as the method that costs the least after consideration of the features, quality of transmission, reliability, and other factors that the health care provider deems relevant to choosing a method of providing the required health care services.

(d) *Bid evaluation criteria.* Applicants must develop weighted evaluation criteria (*e.g.*, scoring matrix) that demonstrate how the applicant will choose the most ''cost-effective'' bid before submitting a Request for Services. Price must be a primary factor, but need not be the only primary factor. A non-price factor can receive an equal weight to price, but may not receive a greater weight than price.

(e) *Request for services.* Applicants must submit the following documents to the Administrator in order to initiate competitive bidding.

(1) *Form 461, including certifications.* The applicant must provide the following certifications as part of the request for services.

(i) The person signing the application is authorized to submit the application on behalf of the applicant and has examined the form and all attachments, and to the best of his or her knowledge, information, and belief, all statements of fact contained therein are true.

(ii) The applicant has followed any applicable state, Tribal, or local procurement rules.

(iii) All Healthcare Connect Fund support will be used solely for purposes reasonably related to the provision of health care service or instruction that the HCP is legally authorized to provide under the law of the state in which the services are provided and will not be sold, resold, or transferred in consideration for money or any other thing of value.

(iv) The applicant satisfies all of the requirements under section 254 of the Act and applicable Commission rules.

(v) The applicant has reviewed all applicable requirements for the program and will comply with those requirements.

(2) *Bid evaluation criteria.* Requirements for bid evaluation criteria are described in paragraph (d) of this section.

(3) *Declaration of assistance.* All applicants must submit a ''Declaration of Assistance'' with their Request for Services. In the Declaration of Assistance, applicants must identify each and every consultant, vendor, and other outside expert, whether paid or unpaid, who aided in the preparation of their applications.

(4) *Request for proposal (if applicable).* (i) Any applicant may use a request for proposals (RFP). Applicants who use an RFP must submit the RFP and any additional relevant bidding information to the Administrator with Form 461.

(ii) An applicant must submit an RFP:

(A) If it is required to issue an RFP under applicable State, Tribal, or local procurement rules or regulations;

(B) If the applicant is a consortium seeking more than $100,000 in program support during the funding year, including applications that seek more than $100,000 in program support for a multi-year commitment; or

(C) If the applicant is a consortium seeking support for participant-constructed and owned network facilities.

(iii) RFP requirements. (A) An RFP must provide sufficient information to enable an effective competitive bidding process, including describing the health care provider's service needs and defining the scope of the project and network costs (if applicable).

(B) An RFP must specify the period during which bids will be accepted.

(C) An RFP must include the bid evaluation criteria described in paragraph (d) of this section, and solicit sufficient information so that the criteria can be applied effectively.

(D) Consortium applicants seeking support for long-term capital investments whose useful life extends beyond the period of the funding commitment (*e.g.*, facilities constructed and owned by the applicant, fiber indefeasible rights of use) must seek bids in the same RFP from vendors who propose to meet those needs via services provided over vendor-owned facilities, for a time period comparable to the life of the proposed capital investment.

(E) Applicants may prepare RFPs in any manner that complies with the rules in this subpart and any applicable state, Tribal, or local procurement rules or regulations.

(5) *Additional requirements for consortium applicants. (i) Network plan.* Consortium applicants must submit a narrative describing specific elements of their network plan with their Request for Services. Consortia applicants are required to use program support for the purposes described in their narrative. The required elements of the narrative include:

(A) Goals and objectives of the network;

(B) Strategy for aggregating the specific needs of health care providers (including providers that serve rural areas) within a state or region;

(C) Strategy for leveraging existing technology to adopt the most efficient and cost effective means of connecting those providers;

(D) How the supported network will be used to improve or provide health care delivery;

(E) Any previous experience in developing and managing health information technology (including telemedicine) programs; and

(F) A project management plan outlining the project's leadership and management structure, and a work plan, schedule, and budget.

(ii) *Letters of agency.* Consortium applicants must submit letters of agency pursuant to § 54.632.

(f) *Public posting by the Administrator.* The Administrator shall post on its web site the following competitive bidding documents, as applicable:

(1) Form 461,

(2) Bid evaluation criteria,

(3) Request for proposal, and

(4) Network plan.

(g) *28-day waiting period.* After posting the documents described in paragraph (f) of this section on its Web site, the Administrator shall send confirmation of the posting to the applicant. The applicant shall wait at least 28 days from the date on which its competitive bidding documents are posted on the Web site before selecting and committing to a vendor.

(1) *Selection of the most ''cost-effective'' bid and contract negotiation.* Each applicant subject to competitive bidding is required to certify to the Administrator that the selected bid is, to the best of the applicant's knowledge, the most cost-effective option available. Applicants are required to submit the documentation listed in § 54.643 to support their certifications.

(2) Applicants who plan to request evergreen status under § 54.642(h)(4)(ii) must enter into a contract that identifies both parties, is signed and dated by the health care provider or Consortium Leader after the 28-day waiting period expires, and specifies the type, term, and cost of service.

(h) *Exemptions to competitive bidding requirements. (1) Annual undiscounted cost of $10,000 or less.* An applicant that seeks support for $10,000 or less of total undiscounted eligible expenses for a

single year is exempt from the competitive bidding requirements under this section, if the term of the contract is one year or less.

(2) Government Master Service Agreement (MSA). Eligible health care providers that seek support for services and equipment purchased from MSAs negotiated by federal, state, Tribal, or local government entities on behalf of such health care providers and others, if such MSAs were awarded pursuant to applicable federal, state, Tribal, or local competitive bidding requirements, are exempt from the competitive bidding requirements under this section.

(3) Master Service Agreements approved under the Pilot Program or Healthcare Connect Fund. A eligible health care provider site may opt into an existing MSA approved under the Pilot Program or Healthcare Connect Fund and seek support for services and equipment purchased from the MSA without triggering the competitive bidding requirements under this section, if the MSA was developed and negotiated in response to an RFP that specifically solicited proposals that included a mechanism for adding additional sites to the MSA.

(4) Evergreen contracts. (i) Subject to the provisions in § 54.644, the Administrator may designate a multi-year contract as ''evergreen,'' which means that the service(s) covered by the contract need not be re-bid during the contract term.

(ii) A contract entered into by a health care provider or consortium as a result of competitive bidding may be designated as evergreen if it meets all of the following requirements:

(A) Is signed by the individual health care provider or consortium lead entity;

(B) Specifies the service type, bandwidth and quantity;

(C) Specifies the term of the contract;

(D) Specifies the cost of services to be provided; and

(E) Includes the physical location or other identifying information of the health care provider sites purchasing from the contract.

(iii) Participants may exercise voluntary options to extend an evergreen contract without undergoing additional competitive bidding, if:

(A) The voluntary extension(s) is memorialized in the evergreen contract;

(B) The decision to extend the contract occurs before the participant files its funding request for the funding year when the contract would otherwise expire; and

(C) The voluntary extension(s) do not exceed five years in the aggregate.

(5) *Schools and libraries program master contracts.* Subject to the provisions in §§ 54.500, 54.501(c)(1), and 54.503, an eligible health care provider in a consortium with participants in the schools and libraries universal service support program and a party to the consortium's existing contract is exempt from the Healthcare Connect Fund competitive bidding requirements if the contract was approved in the schools and libraries universal service support program as a master contract. The health care provider must comply with all Healthcare Connect Fund rules and procedures except for those applicable to competitive bidding.

[78 FR 13988, Mar. 1, 2013, as amended at 79 FR 49203, Aug. 19, 2014]

§ 54.643 Funding commitments.

(a) Once a vendor is selected, applicants must submit a ''Funding Request'' (and supporting documentation) to provide information about the services, equipment, or facilities selected and certify that the services selected were the most cost-effective option of the offers received. The following information should be submitted to the Administrator with the Funding Request.

(1) *Request for funding.* The applicant shall submit a request for funding (Form 462) to identify the service(s), equipment, or facilities; rates; vendor(s); and date(s) of vendor selection.

(2) *Certifications.* The applicant must provide the following certifications as part of the request for funding:

(i) The person signing the application is authorized to submit the application on behalf of the applicant and has examined the form and all attachments, and to the best of his or her knowledge, information, and belief, all statements of fact contained therein are true.

(ii) Each vendor selected is, to the best of the applicant's knowledge, information and belief, the most cost-effective vendor available, as defined in § 54.642(c).

(iii) All Healthcare Connect Fund support will be used only for eligible health care purposes.

(iv) The applicant is not requesting support for the same service from both the Telecommunications Program and the Healthcare Connect Fund.

(v) The applicant satisfies all of the requirements under section 254 of the Act and applicable Commission rules, and understands that any letter from the Administrator that erroneously commits funds for the benefit of the applicant may be subject to rescission.

(vi) The applicant has reviewed all applicable requirements for the program and will comply with those requirements.

(vii) The applicant will maintain complete billing records for the service for five years.

(3) *Contracts or other documentation.* All applicants must submit a contract or other documentation that clearly identifies the vendor(s) selected and the health care provider(s) who will receive the services, equipment, or facilities; the service, bandwidth, and costs for which support is being requested; and the term of the service agreement(s) if applicable (*i.e.,* if services are not being provided on a month-to-month basis). For services, equipment, or facilities provided under contract, the applicant must submit a copy of the contract signed and dated (after the Allowable Contract Selection Date) by the individual health care provider or Consortium Leader. If the service, equipment, or facilities are not being provided under contract, the applicant must submit a bill, service offer, letter, or similar document from the vendor that provides the required information.

(4) *Competitive bidding documents.* Applicants must submit documentation to support their certifications that they have selected the most cost-effective option, including a copy of each bid received (winning, losing, and disqualified), the bid evaluation criteria, and the following documents (as applicable): bid evaluation sheets; a list of people who evaluated bids (along with their title/role/relationship to the applicant organization); memos, board minutes, or similar documents related to the vendor selection/award; copies of notices to winners; and any correspondence with vendors during the bidding/evaluation/award phase of the process. Applicants who claim a competitive bidding exemption must submit relevant documentation to allow the Administrator to verify that the applicant is eligible for the claimed exemption.

(5) *Cost allocation for ineligible entities or components.* Pursuant to § 54.639(d)(3) through (d)(4), where applicable, applicants must submit a description of how costs will be allocated for ineligible entities or components, as well as any agreements that memorialize such arrangements with ineligible entities.

(6) *Additional documentation for consortium applicants.* A consortium applicant must also submit the following:

(i) Any revisions to the network plan submitted with the Request for Services pursuant to § 54.642(e)(5)(i), as necessary. If not previously submitted, the consortium should provide a narrative description of how the network will be managed, including all administrative aspects of the network, including but not limited to invoicing, contractual matters, and network operations. If the consortium is required to provide a sustainability plan as set forth in § 54.643(a)(6)(iv), the revised budget should include the budgetary factors discussed in the sustainability plan requirements.

(ii) A list of participating health care providers and all of their relevant information, including eligible (and ineligible, if applicable) cost information for each participating health care provider.

(iii) Evidence of a viable source for the undiscounted portion of supported costs.

(iv) Sustainability plans for applicants requesting support for long-term capital expenses: Consortia that seek funding to construct and own their own facilities or obtain indefeasible right of use or capital lease interests are required to submit a sustainability plan with their funding requests demonstrating how they intend to maintain and operate the facilities that are

supported over the relevant time period. Applicants may incorporate by reference other portions of their applications (*e.g.*, project management plan, budget). The sustainability plan must, at a minimum, address the following points:

(A) *Projected sustainability period*. Indicate the sustainability period, which at a minimum is equal to the useful life of the funded facility. The consortium's budget must show projected income and expenses (*i.e.*, for maintenance) for the project at the aggregate level, for the sustainability period.

(B) *Principal factors*. Discuss each of the principal factors that were considered by the participant to demonstrate sustainability. This discussion must include all factors that show that the proposed network will be sustainable for the entire sustainability period. Any factor that will have a monetary impact on the network must be reflected in the applicant's budget.

(C) *Terms of membership in the network*. Describe generally any agreements made (or to be entered into) by network members (*e.g.*, participation agreements, memoranda of understanding, usage agreements, or other similar agreements). The sustainability plan must also describe, as applicable:

(*1*) Financial and time commitments made by proposed members of the network;

(*2*) If the project includes excess bandwidth for growth of the network, describe how such excess bandwidth will be financed; and

(*3*) If the network will include ineligible health care providers and other network members, describe how fees for joining and using the network will be assessed.

(D) *Ownership structure*. Explain who will own each material element of the network (*e.g.*, fiber constructed, network equipment, end user equipment). For purposes of this subsection, ''ownership'' includes an indefeasible right of use interest. Applicants must clearly identify the legal entity that will own each material element. Applicants must also describe any arrangements made to ensure continued use of such elements by the network members for the duration of the sustainability period.

(E) *Sources of future support*. Describe other sources of future funding, including fees to be paid by eligible health care providers and/or non-eligible entities.

(F) *Management*. Describe the management structure of the network for the duration of the sustainability period. The applicant's budget must describe how management costs will be funded.

(v) *Material change to sustainability plan*. A consortium that is required to file a sustainability plan must maintain its accuracy. If there is a material change to a required sustainability plan that would impact projected income or expenses by more than 20 percent or $100,000 from the previous submission, or if the applicant submits a funding request based on a new Form 462 (*i.e.*, a new competitively bid contract), the consortium is required to re-file its sustainability plan. In the event of a material change, the applicant must provide the Administrator with the revised sustainability plan no later than the end of the relevant quarter, clearly showing (*i.e.*, by redlining or highlighting) what has changed.

(b) [Reserved]

[78 FR 13990, Mar. 1, 2013]

§ 54.644 Multi-year commitments.

(a) Participants in the Healthcare Connect Fund are permitted to enter into multi-year contracts for eligible expenses and may receive funding commitments from the Administrator for a period that covers up to three funding years.

(b) If a long-term contract covers a period of more than three years, the applicant may also have the contract designated as ''evergreen'' under § 54.642(h)(4) which will allow the applicant to re-apply for a funding commitment under the contract after three years without having to undergo additional competitive bidding.

[78 FR 13991, Mar. 1, 2013]

§ 54.645 Payment process.

(a) The Consortium Leader (or health care provider, if participating individually) must certify to the Administrator that it has paid its contribution to the vendor before the invoice can be sent to Administrator and the vendor can be paid.

(b) Before the Administrator may process and pay an invoice, both the Consortium Leader (or health care provider, if participating individually) and the vendor must certify that they have reviewed the document and that it is accurate. All invoices must be received by the Administrator within six months of the end date of the funding commitment.

[78 FR 13991, Mar. 1, 2013]

§ 54.646 Site and service substitutions.

(a) A Consortium Leader (or health care provider, if participating individually) may request a site or service substitution if:

(1) The substitution is provided for in the contract, within the change clause, or constitutes a minor modification;

(2) The site is an eligible health care provider and the service is an eligible service under the Healthcare Connect Fund;

(3) The substitution does not violate any contract provision or state, Tribal, or local procurement laws; and

(4) The requested change is within the scope of the controlling request for services, including any applicable request for proposal used in the competitive bidding process.

(b) Support for a qualifying site and service substitution will be provided to the extent the substitution does not cause the total amount of support under the applicable funding commitment to increase.

[78 FR 13991, Mar. 1, 2013]

§ 54.647 Data collection and reporting.

(a) Each consortium lead entity must file an annual report with the Administrator on or before September 30 for the preceding funding year, with the information and in the form specified by the Wireline Competition Bureau.

(b) Each consortium is required to file an annual report for each funding year in which it receives support from the Healthcare Connect Fund.

(c) For consortia that receive large upfront payments, the reporting requirement extends for the life of the supported facility.

[78 FR 13991, Mar. 1, 2013]

§ 54.648 Audits and recordkeeping.

(a) *Random audits*. Participants shall be subject to random compliance audits and other investigations to ensure compliance with program rules and orders.

(b) *Recordkeeping*. (1) Participants, including Consortium Leaders and health care providers, shall maintain records to document compliance with program rules and orders for at least 5 years after the last day of service delivered in a particular funding year. Participants who receive support for long-term capital investments in facilities whose useful life extends beyond the period of the funding commitment shall maintain records for at least 5 years after the end of the useful life of the facility. Participants shall maintain asset and inventory records of supported network equipment to verify the actual location of such equipment for a period of 5 years after purchase.

(2) Vendors shall retain records related to the delivery of supported services, facilities, or equipment to document compliance with program rules and orders for at least 5 years after the last day of the delivery of supported services, equipment, or facilities in a particular funding year.

(3) Both participants and vendors shall produce such records at the request of the Commission, any auditor appointed by the Administrator or the Commission, or of any other state or federal agency with jurisdiction.

[78 FR 13991, Mar. 1, 2013]

§ 54.649 Certifications.

For individual health care provider applicants, required certifications must be provided and signed by an officer or director of the health care provider, or other authorized employee of the health care provider. For consortium applicants, an officer, director, or other authorized employee of the Consortium Leader must sign the required

certifications. Pursuant to § 54.680, electronic signatures are permitted for all required certifications.

[78 FR 13992, Mar. 1, 2013]

GENERAL PROVISIONS

§ 54.671 Resale.

(a) *Prohibition on resale.* Services purchased pursuant to universal service support mechanisms under this subpart shall not be sold, resold, or transferred in consideration for money or any other thing of value.

(b) *Permissible fees.* The prohibition on resale set forth in paragraph (a) of this section shall not prohibit a health care provider from charging normal fees for health care services, including instruction related to services purchased with support provided under this subpart.

[78 FR 13992, Mar. 1, 2013]

§ 54.672 Duplicate support.

(a) Eligible health care providers that seek support under the Healthcare Connect Fund for telecommunications services may not also request support from the Telecommunications Program for the same services.

(b) Eligible health care providers that seek support under the Telecommunications Program or the Healthcare Connect Fund may not also request support from any other universal service program for the same expenses.

[78 FR 13992, Mar. 1, 2013]

§ 54.675 Cap.

(a) *Amount of the annual cap.* The aggregate annual cap on federal universal service support for health care providers shall be $400 million per funding year, of which up to $150 million per funding year will be available to support upfront payments and multi-year commitments under the Healthcare Connect Fund.

(b) *Funding year.* A funding year for purposes of the health care providers cap shall be the period July 1 through June 30.

(c) *Requests.* Funds shall be available as follows:

(1) Generally, funds shall be available to eligible health care providers on a first-come-first-served basis, with requests accepted beginning on the first of January prior to each funding year.

(2) For the Telecommunications Program and the Healthcare Connect Fund, the Administrator shall implement a filing window period that treats all eligible health care providers filing within the window period as if their applications were simultaneously received.

(3) [Reserved]

(4) The deadline to submit a funding commitment request under the Telecommunications Program and the Healthcare Connect Fund is June 30 for the funding year that begins on the previous July 1.

(d) *Annual filing requirement.* Health care providers shall file new funding requests for each funding year, except for health care providers who have received a multi-year funding commitment under § 54.644.

(e) *Long-term contracts.* If health care providers enter into long-term contracts for eligible services, the Administrator shall only commit funds to cover the portion of such a long-term contract scheduled to be delivered during the funding year for which universal service support is sought, except for multi-year funding commitments as described in § 54.644.

(f) *Pro-rata reductions for Telecommunications Program support.* The Administrator shall act in accordance with this section when a filing window period for the Telecommunications Program and the Healthcare Connect Fund, as described in paragraph (c)(2) of this section, is in effect. When a filing window period described in paragraph (c)(2) of this section closes, the Administrator shall calculate the total demand for Telecommunications Program and Healthcare Connect Fund support submitted by all applicants during the filing window period. If the total demand during a filing window period exceeds the total remaining support available for the funding year, the Administrator shall take the following steps:

(1) The Administrator shall divide the total remaining funds available for the funding year by the total amount of Telecommunications Program and Healthcare Connect Fund support requested by each applicant that has

filed during the window period, to produce a pro-rata factor.

(2) The Administrator shall calculate the amount of Telecommunications Program and Healthcare Connect Fund support requested by each applicant that has filed during the filing window.

(3) The Administrator shall multiply the pro-rata factor by the total dollar amount requested by each applicant filing during the window period. Administrator shall then commit funds to each applicant for Telecommunications Program and Healthcare Connect Fund support consistent with this calculation.

[78 FR 13992, Mar. 1, 2013]

§ 54.679 Election to offset support against annual universal service fund contribution.

(a) A service provider that contributes to the universal service support mechanisms under subpart H of this part and also provides services eligible for support under this subpart to eligible health care providers may, at the election of the contributor:

(1) Treat the amount eligible for support under this subpart as an offset against the contributor's universal service support obligation for the year in which the costs for providing eligible services were incurred; or

(2) Receive direct reimbursement from the Administrator for that amount.

(b) Service providers that are contributors shall elect in January of each year the method by which they will be reimbursed and shall remain subject to that method for the duration of the calendar year. Any support amount that is owed a service provider that fails to remit its monthly universal service contribution obligation, however, shall first be applied as an offset to that contributor's contribution obligation. Such a service provider shall remain subject to the offsetting method for the remainder of the calendar year in which it failed to remit its monthly universal service obligation. A service provider that continues to be in arrears on its universal service contribution obligations at the end of a calendar year shall remain subject to the offsetting method for the next calendar year.

(c) If a service provider providing services eligible for support under this subpart elects to treat that support amount as an offset against its universal service contribution obligation and the total amount of support owed exceeds its universal service obligation, calculated on an annual basis, the service provider shall receive a direct reimbursement in the amount of the difference. Any such reimbursement due a service provider shall be provided by the Administrator no later than the end of the first quarter of the calendar year following the year in which the costs were incurred and the offset against the contributor's universal service obligation was applied.

[78 FR 13992, Mar. 1, 2013]

§ 54.680 Validity of electronic signatures.

(a) For the purposes of this subpart, an electronic signature (defined by the Electronic Signatures in Global and National Commerce Act, as an electronic sound, symbol, or process, attached to or logically associated with a contract or other record and executed or adopted by a person with the intent to sign the record) has the same legal effect as a written signature.

(b) For the purposes of this subpart, an electronic record (defined by the Electronic Signatures in Global and National Commerce Act, as a contract or other record created, generated, sent, communicated, received, or stored by electronic means) constitutes a record.

[78 FR 13993, Mar. 1, 2013]

Subpart H—Administration

§ 54.701 Administrator of universal service support mechanisms.

(a) The Universal Service Administrative Company is appointed the permanent Administrator of the federal universal service support mechanisms, subject to a review after one year by the Federal Communications Commission to determine that the Administrator is administering the universal service support mechanisms in an efficient, effective, and competitively neutral manner.

(b) The Administrator shall establish a nineteen (19) member Board of Directors, as set forth in § 54.703. The Administrator's Board of Directors shall establish three Committees of the Board of Directors, as set forth in § 54.705: (1) the Schools and Libraries Committee, which shall oversee the schools and libraries support mechanism; (2) the Rural Health Care Committee, which shall oversee the rural health care support mechanism; and (3) the High Cost and Low Income Committee, which shall oversee the high cost and low income support mechanism. The Board of Directors shall not modify substantially the power or authority of the Committees of the Board without prior approval from the Federal Communications Commission.

(c)(1) The Administrator shall establish three divisions:

(i) The Schools and Libraries Division, which shall perform duties and functions in connection with the schools and libraries support mechanism under the direction of the Schools and Libraries Committee of the Board, as set forth in § 54.705(a);

(ii) The Rural Health Care Division, which shall perform duties and functions in connection with the rural health care support mechanism under the direction of the Rural Health Care Committee of the Board, as set forth in § 54.705(b); and

(iii) The High Cost and Low Income Division, which shall perform duties and functions in connection with the high cost and low income support mechanism, the interstate access universal service support mechanism for price cap carriers described in subpart J of this part, and the interstate common line support mechanism for rate-of-return carriers described in subpart K of this part, under the direction of the High Cost and Low Income Committee of the Board, as set forth in § 54.705(c).

(2) As directed by the Committees of the Board set forth in § 54.705, these divisions shall perform the duties and functions unique to their respective support mechanisms.

(d) The Administrator shall be managed by a Chief Executive Officer, as set forth in § 54.704. The Chief Executive Officer shall serve on the Committees of the Board established in § 54.705.

[63 FR 70572, Dec. 21, 1998, as amended at 65 FR 38689, June 21, 2000; 65 FR 57739, Sept. 26, 2000; 66 FR 59727, Nov. 30, 2001; 68 FR 36943, June 20, 2003]

§ 54.702 Administrator's functions and responsibilities.

(a) The Administrator, and the divisions therein, shall be responsible for administering the schools and libraries support mechanism, the rural health care support mechanism, the high-cost support mechanism, and the low income support mechanism.

(b) The Administrator shall be responsible for billing contributors, collecting contributions to the universal service support mechanisms, and disbursing universal service support funds.

(c) The Administrator may not make policy, interpret unclear provisions of the statute or rules, or interpret the intent of Congress. Where the Act or the Commission's rules are unclear, or do not address a particular situation, the Administrator shall seek guidance from the Commission.

(d) The Administrator may advocate positions before the Commission and its staff only on administrative matters relating to the universal service support mechanisms.

(e) The Administrator shall maintain books of account separate from those of the National Exchange Carrier Association, of which the Administrator is an independent subsidiary. The Administrator's books of account shall be maintained in accordance with generally accepted accounting principles. The Administrator may borrow start up funds from the National Exchange Carrier Association. Such funds may not be drawn from the Telecommunications Relay Services (TRS) fund or TRS administrative expense accounts.

(f) The Administrator shall create and maintain a website, as defined in § 54.5, on which applications for services will be posted on behalf of schools, libraries and rural health care providers.

(g) The Administrator shall file with the Commission and Congress an annual report by March 31 of each year.

The report shall detail the Administrator's operations, activities, and accomplishments for the prior year, including information about participation in each of the universal service support mechanisms and administrative action intended to prevent waste, fraud, and abuse. The report also shall include an assessment of subcontractors' performance, and an itemization of monthly administrative costs that shall include all expenses, receipts, and payments associated with the administration of the universal service support programs. The Administrator shall consult each year with Commission staff to determine the scope and content of the annual report.

(h) The Administrator shall report quarterly to the Commission on the disbursement of universal service support program funds. The Administrator shall keep separate accounts for the amounts of money collected and disbursed for eligible schools and libraries, rural health care providers, low-income consumers, and high-cost and insular areas.

(i) Information based on the Administrator's reports will be made public by the Commission at least once a year as part of a Monitoring Report.

(j) The Administrator shall provide the Commission full access to the data collected pursuant to the administration of the universal service support programs.

(k) Pursuant to § 64.903 of this chapter, the Administrator shall file with the Commission a cost allocation manual (CAM) that describes the accounts and procedures the Administrator will use to allocate the shared costs of administering the universal service support mechanisms and its other operations.

(l) The Administrator shall make available to whomever the Commission directs, free of charge, any and all intellectual property, including, but not limited to, all records and information generated by or resulting from its role in administering the support mechanisms, if its participation in administering the universal service support mechanisms ends.

(m) If its participation in administering the universal service support mechanisms ends, the Administrator shall be subject to close-out audits at the end of its term.

(n) The Administrator shall account for the financial transactions of the Universal Service Fund in accordance with generally accepted accounting principles for federal agencies and maintain the accounts of the Universal Service Fund in accordance with the United States Government Standard General Ledger. When the Administrator, or any independent auditor hired by the Administrator, conducts audits of the beneficiaries of the Universal Service Fund, contributors to the Universal Service Fund, or any other providers of services under the universal service support mechanisms, such audits shall be conducted in accordance with generally accepted government auditing standards. In administering the Universal Service Fund, the Administrator shall also comply with all relevant and applicable federal financial management and reporting statutes.

(o) The Administrator shall provide performance measurements pertaining to the universal service support mechanisms as requested by the Commission by order or otherwise.

[63 FR 70573, Dec. 21, 1998, as amended at 65 FR 38690, June 21, 2000; 65 FR 57739, Sept. 26, 2000; 66 FR 59727, Nov. 30, 2001; 67 FR 11259, Mar. 13, 2002; 69 FR 5719, Feb. 6, 2004; 72 FR 54218, Sept. 24, 2007; 76 FR 73876, Nov. 29, 2011]

§ 54.703 The Administrator's Board of Directors.

(a) The Administrator shall have a Board of Directors separate from the Board of Directors of the National Exchange Carrier Association. The National Exchange Carrier Association's Board of Directors shall be prohibited from participating in the functions of the Administrator.

(b) *Board composition.* The independent subsidiary's Board of Directors shall consist of nineteen (19) directors:

(1) Three directors shall represent incumbent local exchange carriers, with one director representing the Bell Operating Companies and GTE, one director representing ILECs (other than the Bell Operating Companies) with annual operating revenues in excess of $40 million, and one director representing ILECs (other than the Bell Operating

Companies) with annual operating revenues of $40 million or less;

(2) Two directors shall represent interexchange carriers, with one director representing interexchange carriers with more than $3 billion in annual operating revenues and one director representing interexchange carriers with annual operating revenues of $3 billion or less;

(3) One director shall represent commercial mobile radio service (CMRS) providers;

(4) One director shall represent competitive local exchange carriers;

(5) One director shall represent cable operators;

(6) One director shall represent information service providers;

(7) Three directors shall represent schools that are eligible to receive discounts pursuant to § 54.501;

(8) One director shall represent libraries that are eligible to receive discounts pursuant to § 54.501;

(9) Two directors shall represent rural health care providers that are eligible to receive supported services pursuant to § 54.601;

(10) One director shall represent low-income consumers;

(11) One director shall represent state telecommunications regulators;

(12) One director shall represent state consumer advocates; and

(13) The Chief Executive Officer of the Administrator.

(c) *Selection process for board of directors.* (1) Sixty (60) days prior to the expiration of a director's term, the industry or non-industry group that is represented by such director on the Administrator's Board of Directors, as specified in paragraph (b) of this section, shall nominate by consensus a new director. The industry or non-industry group shall submit the name of its nominee for a seat on the Administrator's Board of Directors, along with relevant professional and biographical information about the nominee, to the Chairman of the Federal Communications Commission. Only members of the industry or non-industry group that a Board member will represent may submit a nomination for that position.

(2) The name of an industry or non-industry group's nominee shall be filed with the Office of the Secretary of the Federal Communications Commission in accordance with part 1 of this chapter. The document nominating a candidate shall be captioned ''In the matter of: Nomination for Universal Service Administrator's Board of Directors'' and shall reference FCC Docket Nos. 97–21 and 96–45. Each nomination shall specify the position on the Board of Directors for which such nomination is submitted. Two copies of the document nominating a candidate shall be submitted to the Wireline Competition Bureau's Telecommunications Access Policy Division.

(3) The Chairman of the Federal Communications Commission shall review the nominations submitted by industry and non-industry groups and select each director of the Administrator's Board of Directors, as each director's term expires pursuant to paragraph (d) of this section. If an industry or non-industry group does not reach consensus on a nominee or fails to submit a nomination for a position on the Administrator's Board of Directors, the Chairman of the Federal Communications Commission shall select an individual to represent such group on the Administrator's Board of Directors.

(d) *Board member terms.* The directors of the Administrator's Board shall be appointed for three-year terms, except that the Chief Executive Officer shall be a permanent member of the Board. Board member terms shall run from January 1 of the first year of the term to December 31 of the third year of the term, except that, for purposes of the term beginning on January 1, 1999, the terms of the six directors shall expire on December 31, 2000, the terms of another six directors on December 31, 2001, and the terms of the remaining six directors on December 31, 2002. Directors may be reappointed for subsequent terms pursuant to the initial nomination and appointment process described in paragraph (c) of this section. If a Board member vacates his or her seat prior to the completion of his or her term, the Administrator will notify the Wireline Competition Bureau of such vacancy, and a successor will be chosen pursuant to the nomination and appointment process described in paragraph (c) of this section.

(e) All meetings of the Administrator's Board of Directors shall be open to the public and held in Washington, D.C.

(f) Each member of the Administrator's Board of Directors shall be entitled to receive reimbursement for expenses directly incurred as a result of his or her participation on the Administrator's Board of Directors.

[63 FR 70573, Dec. 21, 1998, as amended at 67 FR 13226, Mar. 21, 2002]

§ 54.704 The Administrator's Chief Executive Officer.

(a) *Chief Executive Officer's functions.* (1) The Chief Executive Officer shall have management responsibility for the administration of the federal universal service support mechanisms.

(2) The Chief Executive Officer shall have management responsibility for all employees of the Universal Service Administrative Company. The Chief Executive Officer may delegate such responsibility to heads of the divisions established in § 54.701(g).

(3) The Chief Executive Officer shall serve on the Administrator's Board of Directors as set forth in § 54.703(b) and on the Committees of the Board established under § 54.705.

(b) *Selection process for the Chief Executive Officer.* (1) The members of the Board of Directors of the Administrator shall nominate by consensus a Chief Executive Officer. The Board of Directors shall submit the name of its nominee for Chief Executive Officer, along with relevant professional and biographical information about the nominee, to the Chairman of the Federal Communications Commission.

(2) The Chairman of the Federal Communications Commission shall review the nomination submitted by the Administrator's Board of Directors. Subject to the Chairman's approval, the nominee shall be appointed as the Administrator's Chief Executive Officer.

(3) If the Board of Directors does not reach consensus on a nominee or fails to submit a nomination for the Chief Executive Officer, the Chairman of the Federal Communications Commission shall select a Chief Executive Officer.

[63 FR 70574, Dec. 21, 1998]

§ 54.705 Committees of the Administrator's Board of Directors.

(a) *Schools and Libraries Committee*—(1) *Committee functions.* The Schools and Libraries Committee shall oversee the administration of the schools and libraries support mechanism by the Schools and Libraries Division. The Schools and Libraries Committee shall have the authority to make decisions concerning:

(i) How the Administrator projects demand for the schools and libraries support mechanism;

(ii) Development of applications and associated instructions as needed for the schools and libraries support mechanism;

(iii) Administration of the application process, including activities to ensure compliance with Federal Communications Commission rules and regulations;

(iv) Performance of outreach and education functions;

(v) Review of bills for services that are submitted by schools and libraries;

(vi)–(viii) [Reserved]

(ix) The classification of schools and libraries as urban or rural and the use of the discount matrix established in § 54.505(c) of this chapter to set the discount rate to be applied to services purchased by eligible schools and libraries;

(x) Performance of audits of beneficiaries under the schools and libraries support mechanism; and

(xi) Development and implementation of other functions unique to the schools and libraries support mechanism.

(2) *Committee composition.* The Schools and Libraries Committee shall consist of the following members of the Administrator's Board of Directors:

(i) Three school representatives;

(ii) One library representative;

(iii) One service provider representative;

(iv) One at-large representative elected by the Administrator's Board of Directors; and

(v) The Administrator's Chief Executive Officer.

(b) *Rural Health Care Committee*—(1) *Committee functions.* The Rural Health Care Committee shall oversee the administration of the rural health care

support mechanism by the Rural Health Care Division. The Rural Health Care Committee shall have authority to make decisions concerning:

(i) How the Administrator projects demand for the rural health care support mechanism;

(ii) Development of applications and associated instructions as needed for the rural health care support mechanism;

(iii) Administration of the application process, including activities to ensure compliance with Federal Communications Commission rules and regulations;

(iv) Calculation of support levels under § 54.609;

(v) Performance of outreach and education functions;

(vi) Review of bills for services that are submitted by rural health care providers;

(vii) Monitoring demand for the purpose of determining when the $400 million cap has been reached;

(viii) Performance of audits of beneficiaries under the rural health care support mechanism; and

(ix) Development and implementation of other functions unique to the rural health care support mechanism.

(2) *Committee composition*. The Rural Health Care Committee shall consist of the following members of the Administrator's Board of Directors:

(i) Two rural health care representatives;

(ii) One service provider representative;

(iii) Two at-large representatives elected by the Administrator's Board of Directors;

(iv) One State telecommunications regulator, one state consumer advocate; and

(v) The Administrator's Chief Executive Officer.

(c) *High Cost and Low Income Committee*—(1) *Committee functions*. The High Cost and Low Income Committee shall oversee the administration of the high cost and low income support mechanisms, the interstate access universal service support mechanism for price cap carriers described in subpart J of this part, and the interstate common line support mechanism for rate-of-return carriers described in subpart K of this part by the High Cost and Low Income Division. The High Cost and Low Income Committee shall have the authority to make decisions concerning:

(i) How the Administrator projects demand for the high cost, low income, interstate access universal service, and interstate common line support mechanisms;

(ii) Development of applications and associated instructions as needed for the high cost, low income, interstate access universal service, and interstate common line support mechanisms;

(iii) Administration of the application process, including activities to ensure compliance with Federal Communications Commission rules and regulations;

(iv) Performance of audits of beneficiaries under the high cost, low income, interstate access universal service and interstate common line support mechanisms; and

(v) Development and implementation of other functions unique to the high cost, low income, interstate access universal service and interstate common line support mechanisms.

(d) *Binding Authority of Committees of the Board*. (1) Any action taken by the Committees of the Board established in paragraphs (a) through (c) of this section shall be binding on the Board of Directors of the Administrator, unless such action is presented for review to the Board by the Administrator's Chief Executive Officer and the Board disapproves of such action by a two-thirds vote of a quorum of directors, as defined in the Administrator's by-laws.

(2) The budgets prepared by each Committee shall be subject to Board review as part of the Administrator's combined budget. The Board shall not modify the budgets prepared by the Committees of the Board unless such modification is approved by a two-thirds vote of a quorum of the Board, as defined in the Administrator's by-laws.

[63 FR 70574, Dec. 21, 1998, as amended at 65 FR 38690, June 21, 2000; 65 FR 57739, Sept. 26, 2000; 66 FR 59728, Nov. 30, 2001; 79 FR 49204, Aug. 19, 2014]

§ 54.706 Contributions.

(a) Entities that provide interstate telecommunications to the public, or to such classes of users as to be effectively available to the public, for a fee will be considered telecommunications carriers providing interstate telecommunications services and must contribute to the universal service support mechanisms. Certain other providers of interstate telecommunications, such as payphone providers that are aggregators, providers of interstate telecommunications for a fee on a non-common carrier basis, and interconnected VoIP providers, also must contribute to the universal service support mechanisms. Interstate telecommunications include, but are not limited to:

(1) Cellular telephone and paging services;

(2) Mobile radio services;

(3) Operator services;

(4) Personal communications services (PCS);

(5) Access to interexchange service;

(6) Special access service;

(7) WATS;

(8) Toll-free service;

(9) 900 service;

(10) Message telephone service (MTS);

(11) Private line service;

(12) Telex;

(13) Telegraph;

(14) Video services;

(15) Satellite service;

(16) Resale of interstate services;

(17) Payphone services; and

(18) Interconnected VoIP services.

(19) Prepaid calling card providers.

(b) Except as provided in paragraph (c) of this section, every entity required to contribute to the federal universal service support mechanisms under paragraph (a) of this section shall contribute on the basis of its projected collected interstate and international end-user telecommunications revenues, net of projected contributions.

(c) Any entity required to contribute to the federal universal service support mechanisms whose projected collected interstate end-user telecommunications revenues comprise less than 12 percent of its combined projected collected interstate and international end-user telecommunications revenues shall contribute based only on such entity's projected collected interstate end-user telecommunications revenues, net of projected contributions. For purposes of this paragraph, an ''entity'' shall refer to the entity that is subject to the universal service reporting requirements in § 54.711 and shall include all of that entity's affiliated providers of interstate and international telecommunications and telecommunications services.

(d) Entities providing open video systems (OVS), cable leased access, or direct broadcast satellite (DBS) services are not required to contribute on the basis of revenues derived from those services. The following entities will not be required to contribute to universal service: non-profit health care providers; broadcasters; systems integrators that derive less than five percent of their systems integration revenues from the resale of telecommunications. Prepaid calling card providers are not required to contribute on the basis of revenues derived from prepaid calling cards sold by, to, or pursuant to contract with the Department of Defense (DoD) or a DoD entity.

(e) Any entity required to contribute to the federal universal service support mechanisms shall retain, for at least five years from the date of the contribution, all records that may be required to demonstrate to auditors that the contributions made were in compliance with the Commission's universal service rules. These records shall include without limitation the following: Financial statements and supporting documentation; accounting records; historical customer records; general ledgers; and any other relevant documentation. This document retention requirement also applies to any contractor or consultant working on behalf of the contributor.

[63 FR 70575, Dec. 21, 1998, as amended at 64 FR 60358, Nov. 5, 1999; 67 FR 11260, Mar. 13, 2002; 67 FR 79532, Dec. 30, 2002; 71 FR 38796, July 10, 2006; 71 FR 43673, Aug. 2, 2006; 72 FR 54218, Sept. 24, 2007]

§ 54.707 Audit controls.

The Administrator shall have authority to audit contributors and carriers reporting data to the administrator.

The Administrator shall establish procedures to verify discounts, offsets, and support amounts provided by the universal service support programs, and may suspend or delay discounts, offsets, and support amounts provided to a carrier if the carrier fails to provide adequate verification of discounts, offsets, or support amounts provided upon reasonable request, or if directed by the Commission to do so. The Administrator shall not provide reimbursements, offsets or support amounts pursuant to part 36 and § 69.116 through 69.117 of this chapter, and subparts D, E, and G of this part to a carrier until the carrier has provided to the Administrator a true and correct copy of the decision of a state commission designating that carrier as an eligible telecommunications carrier in accordance with § 54.201.

§ 54.708 De minimis exemption.

If a contributor's contribution to universal service in any given year is less than $10,000 that contributor will not be required to submit a contribution or Telecommunications Reporting Worksheet for that year unless it is required to do so to by our rules governing Telecommunications Relay Service (47 CFR 64.601 *et seq*. of this chapter), numbering administration (47 CFR 52.1 *et seq*. of this chapter), or shared costs of local number portability (47 CFR 52.21 *et seq*. of this chapter). The foregoing notwithstanding, all interconnected VoIP providers, including those whose contributions would be *de minimis*, must file the Telecommunications Reporting Worksheet. If a contributor improperly claims exemption from the contribution requirement, it will subject to the criminal provisions of sections 220(d) and (e) of the Act regarding willful false submissions and will be required to pay the amounts withheld plus interest.

[64 FR 41331, July 30, 1999, as amended at 71 FR 38797, July 10, 2006]

§ 54.709 Computations of required contributions to universal service support mechanisms.

(a) Prior to April 1, 2003, contributions to the universal service support mechanisms shall be based on contributors' end-user telecommunications revenues and on a contribution factor determined quarterly by the Commission. Contributions to the mechanisms beginning April 1, 2003 shall be based on contributors' projected collected end-user telecommunications revenues, and on a contribution factor determined quarterly by the Commission.

(1) For funding the federal universal service support mechanisms prior to April 1, 2003, the subject revenues will be contributors' interstate and international revenues derived from domestic end users for telecommunications or telecommunications services, net of prior period actual contributions. Beginning April 1, 2003, the subject revenues will be contributors' projected collected interstate and international revenues derived from domestic end users for telecommunications or telecommunications services, net of projected contributions.

(2) Prior to April 1, 2003, the quarterly universal service contribution factor shall be determined by the Commission based on the ratio of total projected quarterly expenses of the universal service support mechanisms to the total end-user interstate and international telecommunications revenues, net of prior period actual contributions. Beginning April 1, 2003, the quarterly universal service contribution factor shall be determined by the Commission based on the ratio of total projected quarterly expenses of the universal service support mechanisms to the total projected collected end-user interstate and international telecommunications revenues, net of projected contributions. The Commission shall approve the Administrator's quarterly projected costs of the universal service support mechanisms, taking into account demand for support and administrative expenses. The total subject revenues shall be compiled by the Administrator based on information contained in the Telecommunications Reporting Worksheets described in § 54.711(a).

(3) Total projected expenses for the federal universal service support mechanisms for each quarter must be approved by the Commission before they

are used to calculate the quarterly contribution factor and individual contributions. For each quarter, the Administrator must submit its projections of demand for the federal universal service support mechanisms for high-cost areas, low-income consumers, schools and libraries, and rural health care providers, respectively, and the basis for those projections, to the Commission and the Office of the Managing Director at least sixty (60) calendar days prior to the start of that quarter. For each quarter, the Administrator must submit its projections of administrative expenses for the high-cost mechanism, the low-income mechanism, the schools and libraries mechanism and the rural health care mechanism and the basis for those projections to the Commission and the Office of the Managing Director at least sixty (60) calendar days prior to the start of that quarter. Based on data submitted to the Administrator on the Telecommunications Reporting Worksheets, the Administrator must submit the total contribution base to the Office of the Managing Director at least thirty (30) days before the start of each quarter. The projections of demand and administrative expenses and the contribution factor shall be announced by the Commission in a public notice and shall be made available on the Commission's website. The Commission reserves the right to set projections of demand and administrative expenses at amounts that the Commission determines will serve the public interest at any time within the fourteen-day period following release of the Commission's public notice. If the Commission take no action within fourteen (14) days of the date of release of the public notice announcing the projections of demand and administrative expenses, the projections of demand and administrative expenses, and the contribution factor shall be deemed approved by the Commission. Except as provided in § 54.706(c), the Administrator shall apply the quarterly contribution factor, once approved by the Commission, to contributor's interstate and international end-user telecommunications revenues to calculate the amount of individual contributions.

(b) If the contributions received by the Administrator in a quarter exceed the amount of universal service support program contributions and administrative costs for that quarter, the excess payments will be carried forward to the following quarter. The contribution factors for the following quarter will take into consideration the projected costs of the support mechanisms for that quarter and the excess contributions carried over from the previous quarter. The Commission may instruct the Administrator to treat excess contributions in a manner other than as prescribed in this paragraph (b). Such instructions may be made in the form of a Commission Order or a public notice released by the Wireline Competition Bureau. Any such public notice will become effective fourteen days after release of the public notice, absent further Commission action.

(c) If the contributions received by the Administrator in a quarter are inadequate to meet the amount of universal service support program payments and administrative costs for that quarter, the Administrator shall request authority from the Commission to borrow funds commercially, with such debt secured by future contributions. Subsequent contribution factors will take into consideration the projected costs of the support mechanisms and the additional costs associated with borrowing funds.

(d) If a contributor fails to file a Telecommunications Reporting Worksheet by the date on which it is due, the Administrator shall bill that contributor based on whatever relevant data the Administrator has available, including, but not limited to, the number of lines presubscribed to the contributor and data from previous years, taking into consideration any estimated changes in such data.

[62 FR 41305, Aug. 1, 1997, as amended at 62 FR 65038, Dec. 10, 1997; 63 FR 2132, Jan. 13, 1998; 63 FR 43098, Aug. 12, 1998; 63 FR 70576, Dec. 21, 1998; 64 FR 41331, July 30, 1999; 64 FR 60358, Nov. 5, 1999; 66 FR 16151, Mar. 23, 2001; 67 FR 11260, Mar. 13, 2002; 67 FR 13227, Mar. 21, 2002; 67 FR 79533, Dec. 30, 2002; 68 FR 38642, June 30, 2003; 71 FR 38267, July 6, 2006; 76 FR 73876, Nov. 29, 2011]

§ 54.711 Contributor reporting requirements.

(a) Contributions shall be calculated and filed in accordance with the Telecommunications Reporting Worksheet which shall be published in the FEDERAL REGISTER. The Telecommunications Reporting Worksheet sets forth information that the contributor must submit to the Administrator on a quarterly and annual basis. The Commission shall announce by Public Notice published in the FEDERAL REGISTER and on its website the manner of payment and dates by which payments must be made. An executive officer of the contributor must certify to the truth and accuracy of historical data included in the Telecommunications Reporting Worksheet, and that any projections in the Telecommunications Reporting Worksheet represent a good-faith estimate based on the contributor's policies and procedures. The Commission or the Administrator may verify any information contained in the Telecommunications Reporting Worksheet. Contributors shall maintain records and documentation to justify information reported in the Telecommunications Reporting Worksheet, including the methodology used to determine projections, for three years and shall provide such records and documentation to the Commission or the Administrator upon request. Inaccurate or untruthful information contained in the Telecommunications Reporting Worksheet may lead to prosecution under the criminal provisions of Title 18 of the United States Code. The Administrator shall advise the Commission of any enforcement issues that arise and provide any suggested response.

(b) The Commission shall have access to all data reported to the Administrator. Contributors may make requests for Commission nondisclosure of company-specific revenue information under § 0.459 of this chapter by so indicating on the Telecommunications Reporting Worksheet at the time that the subject data are submitted. The Commission shall make all decisions regarding nondisclosure of company-specific information. The Administrator shall keep confidential all data obtained from contributors, shall not use such data except for purposes of administering the universal service support programs, and shall not disclose such data in company-specific form unless directed to do so by the Commission. Subject to any restrictions imposed by the Chief of the Wireline Competition Bureau, the Universal Service Administrator may share data obtained from contributors with the administrators of the North American Numbering Plan administration cost recovery (See 47 CFR 52.16 of this chapter), the local number portability cost recovery (See 47 CFR 52.32 of this chapter), and the TRS Fund (See 47 CFR 64.604(c)(4)(iii)(H) of this chapter). The Administrator shall keep confidential all data obtained from other administrators and shall not use such data except for purposes of administering the universal service support mechanisms.

(c) The Bureau may waive, reduce, modify, or eliminate contributor reporting requirements that prove unnecessary and require additional reporting requirements that the Bureau deems necessary to the sound and efficient administration of the universal service support mechanisms.

[64 FR 41332, July 30, 1999, as amended at 66 FR 16151, Mar. 23, 2001; 67 FR 13227, Mar. 21, 2002; 67 FR 79533, Dec. 30, 2002]

§ 54.712 Contributor recovery of universal service costs from end users.

(a) Federal universal service contribution costs may be recovered through interstate telecommunications-related charges to end users. If a contributor chooses to recover its federal universal service contribution costs through a line item on a customer's bill the amount of the federal universal service line-item charge may not exceed the interstate telecommunications portion of that customer's bill times the relevant contribution factor.

(b) [Reserved]

[67 FR 79533, Dec. 30, 2002, as amended at 68 FR 15672, Apr. 1, 2003; 71 FR 38797, July 10, 2006]

§ 54.713 Contributors' failure to report or to contribute.

(a) A contributor that fails to file a Telecommunications Reporting Worksheet and subsequently is billed by the Administrator shall pay the amount

for which it is billed. The Administrator may bill a contributor a separate assessment for reasonable costs incurred because of that contributor's filing of an untruthful or inaccurate Telecommunications Reporting Worksheet, failure to file the Telecommunications Reporting Worksheet, or late payment of contributions. Failure to file the Telecommunications Reporting Worksheet or to submit required quarterly contributions may subject the contributor to the enforcement provisions of the Act and any other applicable law. The Administrator shall advise the Commission of any enforcement issues that arise and provide any suggested response. Once a contributor complies with the Telecommunications Reporting Worksheet filing requirements, the Administrator may refund any overpayments made by the contributor, less any fees, interest, or costs.

(b) If a universal service fund contributor fails to make full payment on or before the date due of the monthly amount established by the contributor's applicable Form 499–A or Form 499–Q, or the monthly invoice provided by the Administrator, the payment is delinquent. All such delinquent amounts shall incur from the date of delinquency, and until all charges and costs are paid in full, interest at the rate equal to the U.S. prime rate (in effect on the date of the delinquency) plus 3.5 percent, as well as administrative charges of collection and/or penalties and charges permitted by the applicable law (e.g., 31 U.S.C. 3717 and implementing regulations).

(c) If a universal service fund contributor is more than 30 days delinquent in filing a Telecommunications Reporting Worksheet Form 499–A or 499–Q, the Administrator shall assess an administrative remedial collection charge equal to the greater of $100 or an amount computed using the rate of the U.S. prime rate (in effect on the date the applicable Worksheet is due) plus 3.5 percent, of the amount due per the Administrator's calculations. In addition, the contributor is responsible for administrative charges of collection and/or penalties and charges permitted by the applicable law (e.g., 31 U.S.C. 3717 and implementing regulations). The Commission may also pursue enforcement action against delinquent contributors and late filers, and assess costs for collection activities in addition to those imposed by the Administrator.

(d) In the event a contributor fails both to file the Worksheet and to pay its contribution, interest will accrue on the greater of the amounts due, beginning with the earlier of the date of the failure to file or pay.

(e) If a universal service fund contributor pays the Administrator a sum that is less than the amount due for the contributor's universal service contribution, the Administrator shall adhere to the ''American Rule'' whereby payment is applied first to outstanding penalty and administrative cost charges, next to accrued interest, and third to outstanding principal. In applying the payment to outstanding principal, the Administrator shall apply such payment to the contributor's oldest past due amounts first.

[72 FR 54219, Sept. 24, 2007]

§ 54.715 Administrative expenses of the Administrator.

(a) The annual administrative expenses of the Administrator should be commensurate with the administrative expenses of programs of similar size, with the exception of the salary levels for officers and employees of the Administrator described in paragraph (b) of this section. The annual administrative expenses may include, but are not limited to, salaries of officers and operations personnel, the costs of borrowing funds, equipment costs, operating expenses, directors' expenses, and costs associated with auditing contributors of support recipients.

(b) All officers and employees of the Administrator may be compensated at an annual rate of pay, including any non-regular payments, bonuses, or other compensation, in an amount not to exceed the rate of basic pay in effect for Level I of the Executive Schedule under 5 U.S.C. 5312.

NOTE TO PARAGRAPH (b): The compensation to be included when calculating whether an employee's rate of pay exceeds Level I of the

Executive Schedule does not include life insurance benefits, retirement benefits (including payments to 401(k) plans), health insurance benefits, or other similar benefits, provided that any such benefits are reasonably comparable to benefits that are provided to employees of the federal government.

(c) The Administrator shall submit to the Commission projected quarterly budgets at least sixty (60) days prior to the start of every quarter. The Commission must approve the projected quarterly budgets before the Administrator disburses funds under the federal universal service support mechanisms. The administrative expenses incurred by the Administrator in connection with the schools and libraries support mechanism, the rural health care support mechanism, the high-cost support mechanism, and the low income support mechanism shall be deducted from the annual funding of each respective support mechanism. The expenses deducted from the annual funding for each support mechanism also shall include the Administrator's joint and common costs allocated to each support mechanism pursuant to the cost allocation manual filed by the Administrator under § 64.903 of this chapter.

[63 FR 70576, Dec. 21, 1998, as amended at 65 FR 38690, June 21, 2000; 65 FR 57739, Sept. 26, 2000; 66 FR 59728, Nov. 30, 2001; 69 FR 5719, Feb. 6, 2004; 76 FR 73877, Nov. 29, 2011]

§ 54.717 Audits of the Administrator.

The Administrator shall obtain and pay for an annual audit conducted by an independent auditor to examine its operations and books of account to determine, among other things, whether the Administrator is properly administering the universal service support mechanisms to prevent fraud, waste, and abuse:

(a) Before selecting an independent auditor, the Administrator shall submit preliminary audit requirements, including the proposed scope of the audit and the extent of compliance and substantive testing, to the Office of Managing Director.

(b) The Office of Managing Director shall review the preliminary audit requirements to determine whether they are adequate to meet the audit objectives. The Office of Managing Director shall prescribe modifications that shall be incorporated into the final audit requirements.

(c) After the audit requirements have been approved by the Office of Managing Director, the Administrator shall engage within thirty (30) calendar days an independent auditor to conduct the annual audit required by this paragraph. In making its selection, the Administrator shall not engage any independent auditor who has been involved in designing any of the accounting or reporting systems under review in the audit.

(d) The independent auditor selected by the Administrator to conduct the annual audit shall be instructed by the Administrator to develop a detailed audit program based on the final audit requirements and shall be instructed by the Administrator to submit the audit program to the Office of Managing Director. The Office of Managing Director shall review the audit program and make modifications, as needed, that shall be incorporated into the final audit program. During the course of the audit, the Office of Managing Director may direct the Administrator to direct the independent auditor to take any actions necessary to ensure compliance with the audit requirements.

(e) During the course of the audit, the Administrator shall instruct the independent auditor to:

(1) Inform the Office of Managing Director of any revisions to the final audit program or to the scope of the audit;

(2) Notify the Office of Managing Director of any meetings with the Administrator in which audit findings are discussed; and

(3) Submit to the Chief of the Wireline Competition Bureau any accounting or rule interpretations necessary to complete the audit.

(f) Within 105 calendar days after the end of the audit period, but prior to discussing the audit findings with the Administrator, the independent auditor shall be instructed by the Administrator to submit a draft of the audit report to the Office of Managing Director Audit Staff.

(g) The Office of Managing Director shall review the audit findings and audit workpapers and offer its recommendations concerning the conduct

of the audit or the audit findings to the independent auditor. Exceptions of the Office of Managing Director to the findings and conclusions of the independent auditor that remain unresolved shall be included in the final audit report.

(h) Within fifteen (15) calendar days after receiving the Office of Managing Director's recommendations and making any revisions to the audit report, the Administrator shall instruct the independent auditor to submit the audit report to the Administrator for its response to the audit findings. At this time the auditor also must send copies of its audit findings to the Office of Managing Director. The Administrator shall provide the independent auditor time to perform additional audit work recommended by the Office of Managing Director.

(i) Within thirty (30) calendar days after receiving the audit report, the Administrator shall respond to the audit findings and send copies of its response to the Office of Managing Director. The Administrator shall instruct the independent auditor that any reply that the independent auditor wishes to make to the Administrator's responses shall be sent to the Office of Managing Director as well as the Administrator. The Administrator's response and the independent auditor's replies shall be included in the final audit report;

(j) Within ten (10) calendar days after receiving the response of the Administrator, the independent auditor shall file with the Commission the final audit report.

(k) Based on the final audit report, the Managing Director may take any action necessary to ensure that the universal service support mechanisms operate in a manner consistent with the requirements of this part, as well as such other action as is deemed necessary and in the public interest.

[67 FR 13227, Mar. 21, 2002, as amended at 68 FR 18907, Apr. 17, 2003; 71 FR 38267, July 6, 2006; 77 FR 71712, Dec. 4, 2012]

Subpart I—Review of Decisions Issued by the Administrator

§ 54.719 Parties permitted to seek review of Administrator decision.

(a) Any party aggrieved by an action taken by the Administrator, as defined in § 54.701, § 54.703, or § 54.705, must first seek review from the Administrator.

(b) Any party aggrieved by an action taken by the Administrator, after seeking review from the Administrator, may then seek review from the Federal Communications Commission, as set forth in § 54.722.

(c) Parties seeking waivers of the Commission's rules shall seek relief directly from the Commission.

[79 FR 49204, Aug. 19, 2014]

§ 54.720 Filing deadlines.

(a) An affected party requesting review of an Administrator decision by the Commission pursuant to § 54.719, shall file such a request within sixty (60) days from the date the Administrator issues a decision.

(b) In all cases of requests for review filed under § 54.719(a) through (c) the request for review shall be deemed filed on the postmark date. If the postmark date cannot be determined, the applicant must file a sworn affidavit stating the date that the request for review was mailed.

(c) Parties shall adhere to the time periods for filing oppositions and replies set forth in 47 CFR 1.45.

[79 FR 49204, Aug. 19, 2014]

EFFECTIVE DATE NOTE: At 79 FR 49204, Aug. 19, 2014, § 54.720 was revised. However, paragraph (a) contains information collection and recordkeeping requirements and will not become effective until approval has been given by the Office of Management and Budget.

§ 54.721 General filing requirements.

(a) Except as otherwise provided herein, a request for review of an Administrator decision by the Federal Communications Commission shall be filed with the Federal Communications Commission's Office of the Secretary in accordance with the general requirements set forth in part 1 of this chapter. The request for review shall be captioned ''In the matter of Request

for Review by (name of party seeking review) of Decision of Universal Service Administrator'' and shall reference the applicable docket numbers.

(b) A request for review pursuant to § 54.719(a) through (c) shall contain:

(1) A statement setting forth the party's interest in the matter presented for review;

(2) A full statement of relevant, material facts with supporting affidavits and documentation;

(3) The question presented for review, with reference, where appropriate, to the relevant Federal Communications Commission rule, Commission order, or statutory provision;

(4) A statement of the relief sought and the relevant statutory or regulatory provision pursuant to which such relief is sought.

(c) A copy of a request for review that is submitted to the Federal Communications Commission shall be served on the Administrator consistent with the requirement for service of documents set forth in § 1.47 of this chapter.

(d) If a request for review filed pursuant to § 54.720(a) through (c) alleges prohibitive conduct on the part of a third party, such request for review shall be served on the third party consistent with the requirement for service of documents set forth in § 1.47 of this chapter. The third party may file a response to the request for review. Any response filed by the third party shall adhere to the time period for filing replies set forth in § 1.45 of this chapter and the requirement for service of documents set forth in § 1.47 of this chapter.

[63 FR 70578, Dec. 21, 1998, as amended at 68 FR 36944, June 20, 2003]

§ 54.722 Review by the Wireline Competition Bureau or the Commission.

(a) Requests for review of Administrator decisions that are submitted to the Federal Communications Commission shall be considered and acted upon by the Wireline Competition Bureau; provided, however, that requests for review that raise novel questions of fact, law or policy shall be considered by the full Commission.

(b) An affected party may seek review of a decision issued under delegated authority by the Common Carrier Bureau pursuant to the rules set forth in part 1 of this chapter.

[63 FR 70578, Dec. 21, 1998, as amended at 67 FR 13228, Mar. 21, 2002]

§ 54.723 Standard of review.

(a) The Wireline Competition Bureau shall conduct *de novo* review of request for review of decisions issue by the Administrator.

(b) The Federal Communications Commission shall conduct *de novo* review of requests for review of decisions by the Administrator that involve novel questions of fact, law, or policy; provided, however, that the Commission shall not conduct *de novo* review of decisions issued by the Wireline Competition Bureau under delegated authority.

[67 FR 13228, Mar. 21, 2002]

§ 54.724 Time periods for Commission approval of Administrator decisions.

(a) The Wireline Competition Bureau shall, within ninety (90) days, take action in response to a request for review of an Administrator decision that is properly before it. The Wireline Competition Bureau may extend the time period for taking action on a request for review of an Administrator decision for a period of up to ninety days. The Commission may also at any time, extend the time period for taking action of a request for review of an Administrator decision pending before the Wireline Competition Bureau.

(b) The Commission shall issue a written decision in response to a request for review of an Administrator decision that involves novel questions of fact, law, or policy within ninety (90) days. The Commission may extend the time period for taking action on the request for review of an Administrator decision. The Wireline Competition Bureau also may extend action on a request for review of an Administrator decision for a period of up to ninety days.

[67 FR 13228, Mar. 21, 2002]

§ 54.725 Universal service disbursements during pendency of a request for review and Administrator decision.

(a) When a party has sought review of an Administrator decision under § 54.719(a) through (c) in connection with the schools and libraries support mechanism or the rural health care support mechanism, the Administrator shall not reimburse a service provider for the provision of discounted services until a final decision has been issued either by the Administrator or by the Federal Communications Commission; provided, however, that the Administrator may disburse funds for any amount of support that is not the subject of an appeal.

(b) When a party has sought review of an Administrator decision under § 54.719(a) through (c) in connection with the high cost and low income support mechanisms, the Administrator shall not disburse support to a service provider until a final decision has been issued either by the Administrator or by the Federal Communications Commission; provided, however, that the Administrator may disburse funds for any amount of support that is not the subject of an appeal.

Subpart J—Interstate Access Universal Service Support Mechanism

§ 54.800 Terms and definitions.

(a) *Average Price Cap CMT Revenue Per Line Month in a Study Area* has the same meaning as that term is defined in § 61.3(d) of this chapter, except that it includes exogenous changes in effect prior to the effective date of a calculation made pursuant to § 54.808 and exogenous changes not yet effective related to the sale or acquisition of exchanges, but excludes any other exogenous changes or other changes made pursuant to § 61.45(i)(4) of this chapter that are not yet effective.

(b) *Base Period Lines*. For purposes of calculations pursuant to this subpart, Base Period Lines are the number of lines for a given study area or zone as of the end of the quarter ending 6 months prior to the effective date of a calculation pursuant to § 54.808.

(c) *Interstate Access Universal Service Support Benchmark* shall mean, for residential and single-line business lines, $7.00, and for multi-line business lines, $9.20.

(d) *Minimum Adjustment Amount (MAA)* is defined in § 54.806(f).

(e) *MAA Phase In Percentage* is:

50% as of July 1, 2000,

75% as of July 1, 2001,

100% as of July 1, 2002.

(f) *Minimum Delta (MD)* is defined in § 54.806(d).

(g) *Minimum Support Requirement (MSR)* is defined in § 54.806(g).

(h) *Nationwide Total Above Benchmark Revenues* is defined in § 54.806(b).

(i) *Price Cap Local Exchange Carrier* is defined in § 61.3(aa) of this chapter.

(j) *Preliminary Minimum Access Universal Service Support for a Study Area* is the amount calculated pursuant to § 54.804.

(k) *Preliminary Study Area Universal Service Support (PSAUSS)* is defined in § 54.806(c).

(l) *Study Area Above Benchmark Revenues* is the sum of all Zone Above Benchmark Revenues for all zones in the study area.

(m) *Study Area Access Universal Service Support (SAAUS)* is defined in § 54.806 (i) and (j).

(n) *Total National Minimum Delta (TNMD)* is the nationwide sum of all study area Minimum Deltas.

(o) *Total National Minimum Support Requirement (TNMSR)* is the sum of the MSR for all price cap local exchange carrier area study areas.

(p) *Zone Above Benchmark Revenues* is defined in § 54.805(a)(2).

(q) *Zone Average Revenue per Line*. The amount calculated as follows:

Zone Average Revenue Per Line = (25% * (Loop + Port)) + U (Uniform revenue per line adjustment)

Where:

Loop = the price for unbundled loops in a UNE zone.

Port = the price for switch ports in that UNE zone.

U = [(Average Price Cap CMT Revenue per Line month in a study area * price cap local exchange carrier Base Period Lines) − (25% * Σ (price cap local exchange carrier Base Period Lines in a UNE Zone * ((Loop + Port) for all zones)))] + price cap

local exchange carrier Base Period Lines in a study area.

[65 FR 38690, June 21, 2000; 65 FR 57739, Sept. 26, 2000]

§ 54.801 General.

(a) The total amount of universal service support under this subpart, excluding administrative expenses, for areas served by price cap local exchange carriers as of June 30, 2000, is targeted to be $650 million per year, if no exchanges, other than those offered for sale prior to January 1, 2000, are sold to non-price-cap local exchange carriers or purchased from non-price cap local exchange carriers by price cap local exchange carriers.

(b) In the event that all or a portion of a study area served by a price cap local exchange carrier is sold to an entity other than a price cap local exchange carrier, and the study area or portion thereof was not offered for sale prior to January 1, 2000, then the support that would otherwise be provided under this subpart, had such study area or portion thereof not been sold, will not be distributed or collected. Subsequent calculations will use the last reported data for the study area or portion thereof that was sold to determine the amount that will not be distributed or collected.

(c) In the event that a price cap local exchange carrier acquires additional exchanges, from an entity other than a price cap local exchange carrier, that acquisition should be reported to the Administrator pursuant to § 54.802 and included in the determination of study area support pursuant to § 54.806 for the areas served by the acquiring price cap LEC, beginning with the next support recalculation pursuant to § 54.808.

(d) In the event that a price cap local exchange carrier acquires additional exchanges from an entity that is also a price cap local exchange carrier, the acquiring price cap local exchange carrier will receive support under this subpart at the same level as the selling price cap local exchange carrier formerly received, and both carriers will adjust their line counts accordingly beginning with the next quarterly report to the Administrator. At the subsequent report to the Administrator for purposes of recalculating support as required by § 54.808, the acquiring and selling price cap local exchange carriers will reflect the acquired and sold lines, and will adjust the Average CMT Revenue per Line month for the affected study areas accordingly.

(e) The Administrator for the fund created by this subpart shall be the Universal Service Administrative Company.

(f) Beginning January 1, 2012, no incumbent or competitive eligible telecommunications carrier shall receive support pursuant to this subpart, nor shall any incumbent or competitive eligible telecommunications carrier be required to complete any filings pursuant to this subpart after March 31, 2012.

[65 FR 38690, June 21, 2000, as amended at 65 FR 57739, Sept. 26, 2000; 76 FR 73877, Nov. 29, 2011]

§ 54.802 Obligations of local exchange carriers and the Administrator.

(a) Each Eligible Telecommunications Carrier that is providing service within an area served by a price cap local exchange carrier shall submit to the Administrator, on a quarterly basis on the last business day of March, June, September, and December of each year line count data showing the number of lines it serves for the period ending three months prior to the reporting date, within each price cap local exchange carrier study area disaggregated by UNE Zone if UNE Zones have been established within that study area, showing residential/single-line business and multi-line business line counts separately. For purposes of this report, and for purposes of computing support under this subpart, the aggregated residential/single-line business class lines reported include single and non-primary residential lines, single-line business lines, ISDN BRI and other related residential class lines. Similarly, the multi-line business class lines reported include multi-line business, centrex, ISDN PRI and other related business class lines assessed the End User Common Line charge pursuant to § 69.152 of this chapter. For purposes of this report and for purposes of computing support under this subpart, lines served using resale of the price cap local exchange carrier's service pursuant to section

251(c)(4) of the Communications Act of 1934, as amended, shall be considered lines served by the price cap local exchange carrier only and must be reported accordingly.

(b) In addition to the information submitted pursuant to paragraph (a) of this section, each price cap local exchange carrier must submit to the Administrator, on June 30, 2000, October 15, 2000, and April 16, 2001 and annually thereafter or as determined by the Administrator according to § 54.808:

(1)(i) Average Price Cap CMT Revenue per Line month in a study area for each of its study areas;

(ii) The rates established for UNE Loops and UNE Line Ports, by zone in those study areas where UNE Zones have been established as of the date of filing; and

(iii) Make available information sufficient to determine the boundaries of each UNE Zone within each of its study areas where such zones have been established;

(2) Provided, however, that after the June 30, 2000 filing, if there have been no changes since its previous filing a company may submit a statement that there have been no changes in lieu of such information, and further provided that, for study areas in which UNE Zones have been newly established since the last filing pursuant to this paragraph, the price cap local exchange carrier shall also report the information required by paragraphs (b)(1)(ii) and (b)(1)(iii) of this section to the Administrator on July 15, 2000, or January 15, 2001, as required.

(c) An eligible telecommunications carrier shall be eligible for support pursuant to this subpart only after it has filed all of the information required by paragraphs (a) through (c) of this section, where applicable. An eligible telecommunications carrier shall receive payment of support pursuant to this subpart only for such months the carrier is actually providing service to the end user. The Administrator shall ensure that there is periodic reconciliation of support payments.

(d) Upon receiving the information required to be filed in paragraphs (a) and (b) of this section, the Administrator shall:

(1) Perform the calculations described in §§ 54.804 through 54.807 of this subpart;

(2) Publish the results of these calculations showing Interstate Access Universal Service Support Per Line available in each price cap local exchange carrier study area, by UNE Zone and customer class;

(3) Collect the funds necessary to provide support pursuant to this subpart in accordance with subpart H;

(4) Distribute support calculated pursuant to the rules contained in this subpart; and

(5) Report quarterly to the Commission on the collection and distribution of funds under this subpart as described in § 54.701(g). Fund distribution reporting will be by state and by eligible telecommunications carrier within the state.

[65 FR 38690, June 21, 2000; 65 FR 57739, 57740, Sept. 26, 2000]

§ 54.803 Universal service zones.

(a) The zones used for determining interstate access universal service support shall be the same zones that would be used for End User Common Line (EUCL) charge deaveraging as described in § 69.152(q)(2) of this chapter.

(b) In a price cap study area where the price cap local exchange carrier has not established state-approved prices for UNE loops by zone, the Administrator shall develop an estimate of the local exchange carrier's Zone Above Benchmark Revenues for transitional purposes, in order to reserve a portion of the fund for that study area. This estimate will be included by the Administrator in the Nationwide Study Area Above Benchmark Revenues calculated pursuant to § 54.806.

(1) For the purpose of developing this transitional estimate, the loop and port costs estimated by the FCC cost model, or other substitute method if no model is available, shall be used.

(2) For the purpose of developing this transitional estimate, the administrator shall construct three zones. Wire centers within the study area will be grouped into these zones in such a way that each zone is assigned approximately one third of local exchange carrier base period lines in the study area,

with the lowest cost wire centers assigned to Zone 1, the highest cost wire centers assigned to Zone 3, and the remainder to Zone 2.

[65 FR 38690, June 21, 2000; 65 FR 57740, Sept. 26, 2000]

§ 54.804 Preliminary minimum access universal service support for a study area calculated by the Administrator.

(a) If Average Price Cap CMT Revenue per Line month is greater than $9.20 then: Preliminary Minimum Access Universal Service Support (for a study area) = Average Price Cap CMT Revenue per Line month in a study area * price cap local exchange carrier Base Period Lines * 12) − (($7.00 * price cap local exchange carrier Base Period Residential and Single-Line Business Lines * 12) + ($9.20 * price cap local exchange carrier Base Period Multi-line Business Lines * 12)).

(b) If Average Price Cap CMT Revenue per Line month in a study area is greater than $7.00 but less than $9.20 then: Preliminary Minimum Access Universal Service Support (for a study area) = (Average Price Cap CMT Revenue per Line month in a study area—$7.00) * (price cap local exchange carrier Base Period Residential and Single-Line Business Lines * 12).

(c) If Average Price Cap CMT Revenue per Line month in a study area is less than $7.00 then the Preliminary Minimum Access Universal Service Support (for a study area) is zero.

[65 FR 57740, Sept. 26, 2000]

§ 54.805 Zone and study area above benchmark revenues calculated by the Administrator.

(a) The following steps shall be performed by the Administrator to determine Zone Above Benchmark Revenues for each price cap local exchange carrier.

(1) Calculate Zone Average Revenue Per Line.

(2) Calculate Zone Above Benchmark Revenues. Zone Above Benchmark Revenues is the sum of Zone Above Benchmark Revenues for Residential and Single-Line Business Lines and Zone Above Benchmark Revenues for Multi-Line Business Lines. Zone Above Benchmark Revenues for Residential and Single-Line Business Lines is, within each zone, (Zone Average Revenue Per Line minus $7.00) multiplied by all eligible telecommunications carrier Base Period Residential and Single-Line Business Lines times 12. If negative, the Zone Above Benchmark Revenues for Residential and Single-Line Business Lines for the zone is zero. Zone Above Benchmark Revenues for Multi-line Business Lines is, within each zone, (Zone Average Revenue Per Line minus $9.20) multiplied by all eligible telecommunications carrier zone Base Period Multi-line Business Lines times 12. If negative, the Zone Above Benchmark Revenues for Multi-line Business Lines for the zone is zero.

(b) Study Area Above Benchmark Revenues is the sum of Zone Above Benchmark Revenues for all zones in the study area.

[65 FR 38690, June 21, 2000; 65 FR 57740, Sept. 26, 2000]

§ 54.806 Calculation by the Administrator of interstate access universal service support for areas served by price cap local exchange carriers.

(a) The Administrator, based on the calculations performed in §§ 54.804 and 54.805, shall calculate the Interstate Access Universal Service Support for areas served by price cap local exchange carriers according to the following methodology:

(b) Calculate Nationwide Total Above Benchmark Revenues. Nationwide Total Above Benchmark Revenues is the sum of all Study Area Above Benchmark Revenues for all study areas served by local exchange carriers.

(c) Calculate Preliminary Study Area Universal Service Support (PSAUSS).

(1) If the Nationwide Total Above Benchmark Revenues is greater than $650 million, then the Preliminary Study Area Universal Service Support (PSAUSS) equals the Study Area Above Benchmark Revenues multiplied by the ratio of $650 million to Nationwide Total Above Benchmark Revenues (*i.e.*, Preliminary Study Area Universal Service Support = Study Area Above Benchmark Revenues *($650 Million/Nationwide Total Above Benchmark Revenues)).

(2) If the Nationwide Total Above Benchmark Revenues is not greater

than $650 million, PSAUSS equals the Study Area Above Benchmark Revenues.

(d) Calculate the Minimum Delta (MD) by study area. Within each study area the Minimum Delta will be equal to the Preliminary Minimum Access Universal Service Support less the PSAUSS, if the difference is greater than zero. If the difference is less than or equal to zero, the MD is equal to zero.

(e) Calculate the Total National Minimum Delta (TNMD) by summing all study area Minimum Deltas nationwide.

(f) Calculate the Minimum Adjustment Amount. (1) If the TNMD is greater than $75 million, then the Minimum Adjustment Amount (MAA) equals the MAA Phase In Percentage times the MD by study area times the ratio of $75 million to TNMD.

(2) If the TNMD is less than $75 million, then the MAA equals the product of the MAA Phase In Percentage and the MD by study area.

(g) Calculate the Minimum Support Requirement (MSR). The Minimum Support Requirement for a study area equals the PSAUSS plus the MAA.

(h) Calculate the Total National Minimum Support Requirement (TNMSR), which equals the sum of the MSR for all study areas in which the Preliminary Minimum Access Universal Service Support is greater than or equal to the PSAUSS.

(i) Calculate Study Area Access Universal Service Support (SAAUS) for a study area in which the price cap local exchange carrier has geographically deaveraged state-approved rates for UNE loops:

(1) For study areas in which the Preliminary Minimum Access Universal Service Support is greater than PSAUSS, and within which the price cap local exchange carrier has established geographically deaveraged state-approved rates for UNE loops, the SAAUS for that study area is the MSR.

(2) For study areas in which the Preliminary Minimum Access Universal Service Support is less than PSAUSS, and within which the price cap local exchange carrier has established geographically deaveraged state-approved rates for UNE loops, the SAAUS for that study area is equal to:

PSAUSS * ($650 million − TNMSR) ÷ (the sum of PSAUSS of study areas where the Preliminary Minimum Access Universal Service Support is less than PSAUSS).

(j) Calculate Study Area Access Universal Service Support (SAAUS) for a price cap local exchange carrier that has not established geographically deaveraged state-approved rates for UNE loops. In such study areas, the SAAUS shall be the lesser of the Preliminary Minimum Access Universal Service Support or:

(1) For study areas in which the Preliminary Minimum Access Universal Service Support is greater than PSAUSS, and for which an estimate has been made for deaveraged UNE loop costs, the SAAUS for that study area is the MSR.

(2) For study areas in which the Preliminary Minimum Access Universal Service Support is less than PSAUSS, and for which an estimate has been made for deaveraged UNE loop costs, the SAAUS for that study area is equal to:

PSAUSS * ($650 million − TNMSR) ÷ (the sum of PSAUSS of study areas where the Preliminary Minimum Access Universal Service Support is less than PSAUSS).

[65 FR 38690, June 21, 2000; 65 FR 57740, Sept. 26, 2000]

§ 54.807 Interstate access universal service support.

(a) Each Eligible Telecommunications Carrier (ETC) that provides supported service within the study area of a price cap local exchange carrier shall receive Interstate Access Universal Service Support for each line that it serves within that study area.

(b) In any study area within which the price cap local exchange carrier has not established state approved geographically deaveraged rates for UNE loops, the Administrator shall calculate the Interstate Access Universal Service Support Per Line by dividing Study Area Access Universal Service Support by twelve times all eligible telecommunications carriers' base period lines in that study area adjusted for growth during the relevant support

period based on the average nationwide annual growth in eligible lines during the three previous years. For the purpose of calculating growth, the Administrator shall use a simple average of annual growth rates for total switched access lines for the three most recent years as reported in the Common Carrier Bureau Report, Statistics of Communications Common Carriers, Table 6.10—Selected Operating Statistics. Interested parties may obtain this report from the U.S. Government Printing Office or by downloading it from the Federal Communication Commission's website *http://www.fcc.gov/ccb/stats*.

(c) In any study area within which the price cap local exchange carrier has established state approved geographically deaveraged rates for UNE loops, the Administrator shall calculate the Interstate Access Universal Service Support Per Line for each customer class and zone using all eligible telecommunications carriers' base period lines by customer class and zone adjusted for growth during the relevant support period based on the average nationwide annual growth in eligible lines during the three previous years. For the purpose of calculating growth, the Administrator shall use a simple average of annual growth rates for total switched access lines for the three most recent years as reported in the Wireline Competition Bureau Report, Statistics of Communications Common Carriers, Table 6.10—Selected Operating Statistics. Support shall be allocated to lines in the highest cost UNE zone first, and will ''cascade'' to lines in lower cost UNE zones to the extent that sufficient funding is available. Beginning with the zone with the highest Zone Average Revenue Per Line, support will be applied in the following order of priority:

(1) To all lines in the highest zone, to eliminate the amount per line by which Zone Average Revenue Per Line exceeds the higher of $9.20 or the Average Revenue Per Line in the next highest zone;

(2) If the Zone Average Revenue Per Line in the next highest zone is greater than $9.20, then to all lines in both zones to eliminate the amount per line by which Zone Average Revenue per Line exceeds $9.20 or the Zone Average Revenue Per Line in the third highest zone. This application of support will continue to additional zones in the same fashion until the amount per line by which Zone Average Revenue Per Line exceeds $9.20 has been eliminated in all zones, or until the available support has been exhausted;

(3) To all residential and single-line business lines in the highest zone, to eliminate the remaining amount per line that Zone Average Revenue Per Line for these lines exceeds the higher of $7.00 or Zone Average Revenue Per Line in the next highest zone;

(4) If the Zone Average Revenue per Line in the next highest zone is greater than $7.00, then to all residential and single-line business lines in both zones to eliminate the remaining amount per line by which Zone Average Revenue Per Line exceeds $7.00. This application of support will continue to additional zones in the same fashion until the difference between Zone Average Revenue Per Line and $7.00 has been eliminated in all zones, or until the available support has been exhausted.

(d) Notwithstanding the provisions of § 54.307(a)(2), the per-line support amount determined within each zone by applicable customer class under paragraph (b) or (c) of this section is portable among all eligible telecommunications carriers providing service within that zone.

[65 FR 38690, June 21, 2000; 65 FR 57740, Sept. 26, 2000, as amended at 67 FR 13228, Mar. 21, 2002]

§ 54.808 Transition provisions and periodic calculation.

Study Area Access Universal Service Support amounts for the area served by each price cap local exchange carrier will be calculated as of July 1, 2000, January 1, 2001, July 1, 2001 and thereafter as determined by the Administrator, but at least annually.

[65 FR 38690, June 21, 2000; 65 FR 57740, Sept. 26, 2000]

§ 54.809 Carrier certification.

(a) Certification. Carriers that desire to receive support pursuant to § 54.807 must file a certification with the Administrator and the Commission stating that all interstate access universal

service support provided to such carrier will be used only for the provision, maintenance, and upgrading of facilities and services for which the support is intended. Support provided pursuant to § 54.807 shall only be provided to the extent that the carrier has filed the requisite certification pursuant to this section.

(b) Certification format. A certification pursuant to this section may be filed in the form of a letter from an authorized representative for the carrier, and must be filed with both the Office of the Secretary of the Commission clearly referencing CC Docket No. 96–45, and with the Administrator of the interstate access universal service support mechanism, on or before the filing deadlines set forth in paragraph (c) of this section. All of the certifications filed by carriers pursuant to this section shall become part of the public record maintained by the Commission.

(c) *Filing deadlines.* In order for a price cap local exchange carrier or an eligible telecommunications carrier serving lines in the service area of a price cap local exchange carrier to receive interstate access universal service support, such carrier shall file an annual certification, as described in paragraph (b) of this section, on the date that it first files its line count information pursuant to § 54.802, and thereafter on June 30 of each year. Such carrier that files its line count information after the June 30 deadline shall receive support pursuant to the following schedule:

(1) Carriers that file no later than September 30 shall receive support for the fourth quarter of that year and the first and second quarters of the subsequent year.

(2) Carriers that file no later than December 31 shall receive support for the first and second quarters of the subsequent year.

(3) Carriers that file no later than March 31 of the subsequent year shall receive support for the second quarter of the subsequent year.

[65 FR 38690, June 21, 2000; 65 FR 57740, Sept. 26, 2000, as amended at 70 FR 29979, May 25, 2005]

Subpart K—Interstate Common Line Support Mechanism for Rate-of-Return Carriers

SOURCE: 66 FR 59728, Nov. 30, 2001, unless otherwise noted.

§ 54.901 Calculation of Interstate Common Line Support.

(a) Interstate Common Line Support available to a rate-of-return carrier shall equal the Common Line Revenue Requirement per Study Area as calculated in accordance with part 69 of this chapter minus:

(1) The study area revenues obtained from end user common line charges at their allowable maximum as determined by §§ 69.104(n) and 69.104(o) of this chapter;

(2) The carrier common line charge revenues to be phased out pursuant to § 69.105 of this chapter;

(3) The special access surcharge pursuant to § 69.114 of this chapter;

(4) The line port costs in excess of basic analog service pursuant to § 69.130 of this chapter; and

(5) Any Long Term Support for which the carrier is eligible or, if the carrier ceased participation in the NECA common line pool after October 11, 2001, any Long Term Support for which the carrier would have been eligible if it had not ceased its participation in the pool.

(b) The per-line Interstate Common Line Support available to a competitive eligible telecommunications carrier serving lines in a study area served by a rate-of-return carrier shall be calculated by the Administrator as follows:

(1) If the rate-of-return carrier has disaggregated the support it receives in the study area pursuant to § 54.315, the Administrator shall calculate the amount of Interstate Common Line Support targeted to each disaggregation zone by the rate-of-return carrier (targeted Interstate Common Line Support). If the rate-of-return carrier has chosen not to disaggregate its support for a study area pursuant to § 54.315, then the entirety of its Interstate Common Line Support for the study area shall be

considered targeted Interstate Common Line Support for purposes of performing the calculations in this section.

(2) In each disaggregation zone or undisaggregated study area, the Administrator shall calculate the Average Interstate Common Line Support by dividing the rate-of-return carrier's targeted Interstate Common Line Support by its total lines served.

(3) The Administrator shall then calculate the Interstate Common Line Support available to the competitive eligible telecommunications carrier for each line it serves for each customer class in a disaggregation zone or undisaggregated study area by the following formula:

(i) If the Average Interstate Common Line Support is greater than $2.70 multiplied by the number of residential and single-line business lines served by the rate-of-return carrier in the disaggregation zone or undisaggregated study area, then:

(A) Interstate Common Line Support per Multi-Line Business Line = (Average Interstate Common Line Support − $2.70 × residential and single-line business lines served by the rate-of-return carrier) ÷ (total lines served by the rate-of-return carrier); and

(B) Interstate Common Line Support per Residential and Single-Line Business Line = Interstate Common Line Support per Multi-Line Business Line + $2.70.

(ii) If the Average Interstate Common Line Support is less than or equal to $2.70 multiplied by residential and single-line business lines served by the rate-of-return carrier in the disaggregation zone or undisaggregated study area, but greater than $0, then:

(A) Interstate Common Line Support per Multi-Line Business Line = $0; and

(B) Interstate Common Line Support per Residential and Single-Line Business Line = Average Interstate Common Line Support ÷ residential and single line business lines served by the rate-of-return carrier.

(iii) If the Average Interstate Common Line Support is equal to $0, then the competitive eligible telecommunications carrier shall receive no Interstate Common Line Support for lines served in that disaggregation zone or undisaggregated study area.

(4) Beginning January 1, 2012, competitive eligible telecommunications carriers shall not receive Interstate Common Line Support pursuant to this subpart and will instead receive support consistent with § 54.307(e).

(c) Beginning January 1, 2012, for purposes of calculating the amount of Interstate Common Line Support determined pursuant to paragraph (a) of this section that a non-price cap carrier may receive, the corporate operations expense allocated to the Common Line Revenue Requirement, pursuant to § 69.409 of this chapter, shall be limited to the lesser of:

(1) The actual average monthly per-loop corporate operations expense; or

(2) The portion of the monthly per-loop amount computed pursuant to § 36.621(a)(4)(iii) of this chapter that would be allocated to the interstate Common Line Revenue Requirement pursuant to § 69.409 of this chapter.

(d) *Support After December 31, 2011.* Notwithstanding paragraph (a) of this section, beginning January 1, 2012, no carrier that is a rate-of-return carrier, as that term is defined in § 54.5 affiliated with a price cap local exchange carrier, as that term is defined in § 61.3(aa) of this chapter, shall receive support under this subpart.

[66 FR 59728, Nov. 30, 2001, as amended at 76 FR 73877, Nov. 29, 2011; 78 FR 26269, May 6, 2013]

§ 54.902 Calculation of Interstate Common Line Support for transferred exchanges.

(a) In the event that a rate-of-return carrier acquires exchanges from an entity that is also a rate-of-return carrier, Interstate Common Line Support for the transferred exchanges shall be distributed as follows.

(1) Each carrier may report its updated line counts to reflect the transfer in the next quarterly line count filing pursuant to § 54.903(a)(1) that applies to the period in which the transfer occurred. During a transition period from the filing of the updated line counts until the end of the funding year, the Administrator shall adjust the Interstate Common Line Support received by each carrier based on the updated

line counts and the per-line Interstate Common Line Support, categorized by customer class and, if applicable, disaggregation zone, of the selling carrier. If the acquiring carrier does not file a quarterly update of its line counts, it will not receive Interstate Common Line Support for those lines during the transition period.

(2) Each carrier's projected data for the following funding year filed pursuant to § 54.903(a)(3) shall reflect the transfer of exchanges.

(3) Each carrier's actual data filed pursuant to § 54.903(a)(4) shall reflect the transfer of exchanges. All post-transaction Interstate Common Line Support shall be subject to true up by the Administrator pursuant to § 54.903(b)(3).

(b) In the event that a rate-of-return carrier acquires exchanges from a price cap carrier that are incorporated into one of the rate-of-return carrier's existing study areas, Interstate Common Line Support for the transferred exchanges shall be distributed as follows.

(1) The acquiring carrier may report its updated line counts for the study area into which the acquired lines are incorporated in the next quarterly line count filing pursuant to § 54.903(a)(1) that applies to the period in which the transfer occurred. During a transition period from the filing of the updated line counts until the end of the funding year, the Administrator shall adjust the Interstate Common Line Support received by the acquiring carrier based on the updated line counts and the per-line amounts Interstate Common Line Support for the study area served by the acquiring carrier. If necessary, the Administrator shall develop an average per-line support amount to reflect various per-line amounts in multiple disaggregation zones served by the acquiring carrier. If the acquiring carrier does not file a quarterly update of its line counts, it will not receive Interstate Common Line Support for those lines during the transition period.

(2) The acquiring carrier's projected data for the following funding year filed pursuant to § 54.903(a)(3) shall reflect the transfer of exchanges.

(3) The acquiring carrier's actual data filed pursuant to § 54.903(a)(4) shall reflect the transfer of exchanges. All post-transaction Interstate Common Line Support shall be subject to true up by the Administrator pursuant to § 54.903(b)(3).

(c) In the event that a rate-of-return carrier acquires exchanges from a price cap carrier that are not incorporated into one of the rate-of-return carrier's existing study areas, Interstate Common Line Support for the transferred exchanges shall be distributed as follows.

(1) The acquiring rate-of-return may submit to the Administrator a projected Interstate Common Line Revenue Requirement for the acquired exchanges for the remainder of the funding year in the next quarterly report to the Administrator. The Administrator shall distribute Interstate Common Line Support pursuant to the partial year projected Interstate Common Line Revenue Requirement for the remainder of the funding year. If the acquiring carrier does not file a projected Interstate Common Line Revenue Requirement, it will not receive Interstate Common Line Support for those exchanges during the transition period.

(2) The acquiring carrier's projected data for the following funding year filed pursuant to § 54.903(a)(3) shall reflect the transfer of exchanges.

(3) The acquiring carrier's actual data filed pursuant to § 54.903(a)(4) shall reflect the transfer of exchanges. All post-transaction Interstate Common Line Support shall be subject to true up by the Administrator pursuant to § 54.903(b)(3)

(d) In the event that an entity other than a rate-of-return carrier acquires exchanges from a rate-of-return carrier, per-line Interstate Common Line Support will not transfer.

(e) This section does not alter any Commission rule governing the sale or transfer of exchanges, including the definition of ''study area'' in part 36.

[66 FR 59728, Nov. 30, 2001, as amended at 68 FR 31623, May 28, 2003]

§ 54.903 Obligations of rate-of-return carriers and the Administrator.

(a) To be eligible for Interstate Common Line Support, each rate-of-return carrier shall make the following filings with the Administrator.

(1) Beginning July 31, 2002, each rate-of-return carrier shall submit to the Administrator in accordance with the schedule in § 54.1306 the number of lines it serves, within each rate-of-return carrier study area showing residential and single-line business line counts and multi-line business line counts separately. For purposes of this report, and for purposes of computing support under this subpart, the residential and single-line business class lines reported include lines assessed the residential and single-line business End User Common Line charge pursuant to § 69.104 of this chapter, and the multi-line business class lines reported include lines assessed the multi-line business End User Common Line charge pursuant to § 69.104 of this chapter. For purposes of this report, and for purposes of computing support under this subpart, lines served using resale of the rate-of-return local exchange carrier's service pursuant to section 251(c)(4) of the Communications Act of 1934, as amended, shall be considered lines served by the rate-of-return carrier only and must be reported accordingly.

(2) A rate-of-return carrier may submit the information in paragraph (a) of this section in accordance with the schedule in § 54.1306, even if it is not required to do so. If a rate-of-return carrier makes a filing under this paragraph, it shall separately indicate any lines that it has acquired from another carrier that it has not previously reported pursuant to paragraph (a) of this section, identified by customer class and the carrier from which the lines were acquired.

(3) Each rate-of-return carrier shall submit to the Administrator annually on March 31st projected data necessary to calculate the carrier's prospective Interstate Common Line Support, including common line cost and revenue data, for each of its study areas in the upcoming funding year. The funding year shall be July 1st of the current year through June 30th of the next year. Each rate-of-return carrier will be permitted to submit a correction to the projected data filed on March 31st until June 30th for the upcoming funding year. On June 30th each rate-of-return carrier will be permitted to submit to the Administrator an update to the projected data for the funding year ending on that date.

(4) Each rate-of-return carrier shall submit to the Administrator on December 31st of each year the data necessary to calculate a carrier's Interstate Common Line Support, including common line cost and revenue data, for the prior calendar year. Such data shall be used by the Administrator to make adjustments to monthly per-line Interstate Common Line Support amounts in the final two quarters of the following calendar year to the extent of any differences between the carrier's ICLS received based on projected common line cost and revenue data and the ICLS for which the carrier is ultimately eligible based on its actual common line cost and revenue data during the relevant period.

(b) Upon receiving the information required to be filed in paragraph (a) of this section, the Administrator shall:

(1) Perform the calculations described in § 54.901;

(2) Publish the results of these calculations showing Interstate Common Line Support Per Line available in each rate-of-return carrier study area, by Disaggregation Zone and customer class;

(3) Perform periodic reconciliation of the Interstate Common Line Support provided to each carrier based on projected data filed pursuant to paragraph (a)(3) of this section and the Interstate Common Line Support for which each carrier is eligible based on actual data filed pursuant to paragraph (a)(4) of this section.

(4) Collect the funds necessary to provide support pursuant to this subpart in accordance with subpart H of this part;

(5) Distribute support calculated pursuant to the rules contained in this subpart; and

(6) Report quarterly to the Commission on the collection and distribution of funds under this subpart as described in § 54.702(i). Fund distribution reporting will be by state and by eligible telecommunications carrier within the state.

[66 FR 59728, Nov. 30, 2001, as amended at 67 FR 15493, Apr. 2, 2002; 67 FR 19809, Apr. 23, 2002; 68 FR 31623, May 28, 2003; 77 FR 14303, Mar. 9, 2012; 79 FR 39190, July 9, 2014]

§ 54.904 Carrier certification.

(a) *Certification.* Carriers that desire to receive support pursuant to this subpart shall file a certification with the Administrator and the Federal Communications Commission stating that all Interstate Common Line Support provided to such carrier will be used only for the provision, maintenance, and upgrading of facilities and services for which the support is intended. Support provided pursuant to this subpart shall only be provided to the extent that the carrier has filed the requisite certification pursuant to this section.

(b) *Certification format.* A certification pursuant to this section may be filed in the form of a letter from an authorized representative for the carrier, and must be filed with both the Administrator and the Office of the Secretary of the Federal Communication Commission clearly referencing CC Docket No. 96–45, on or before the filing deadlines set forth in paragraph (d) of this section.

(c) All of the certifications filed by carriers pursuant to this section shall become part of the public record maintained by the Commission.

(d) *Filing deadlines.* In order for a rate-of-return carrier, and/or an eligible telecommunications carrier serving lines in the service area of a rate-of-return carrier, to receive Interstate Common Line Support, such carrier must file an annual certification, as described in paragraph (b) of this section, on the date that it first files its line count information pursuant to § 54.903, and thereafter on June 30th of each year.

Subpart L—Mobility Fund

SOURCE: 76 FR 73877, Nov. 29, 2011, unless otherwise noted.

§ 54.1001 Mobility Fund—Phase I.

The Commission will use competitive bidding, as provided in part 1, subpart AA, of this chapter, to determine the recipients of support available through Phase I of the Mobility Fund and the amount(s) of support that they may receive for specific geographic areas, subject to applicable post-auction procedures.

§ 54.1002 Geographic areas eligible for support.

(a) Mobility Fund Phase I support may be made available for census blocks identified as eligible by public notice.

(b) Except as provided in § 54.1004, coverage units for purposes of conducting competitive bidding and disbursing support based on designated road miles will be identified by public notice for each census block eligible for support.

§ 54.1003 Provider eligibility.

(a) Except as provided in § 54.1004, an applicant shall be an Eligible Telecommunications Carrier in an area in order to receive Mobility Fund Phase I support for that area. The applicant's designation as an Eligible Telecommunications Carrier may be conditional subject to the receipt of Mobility Fund support.

(b) An applicant shall have access to spectrum in an area that enables it to satisfy the applicable performance requirements in order to receive Mobility Fund Phase I support for that area. The applicant shall certify, in a form acceptable to the Commission, that it has received any Commission approvals necessary for such access at the time it applies to participate in competitive bidding and at the time that it applies for support and that it will retain such access for five (5) years after the date on which it is authorized to receive support. Pending requests for such approvals are not sufficient to satisfy this requirement.

(c) An applicant shall certify that it is financially and technically qualified to provide the services supported by Mobility Fund Phase I in order to receive such support.

[76 FR 73877, Nov. 29, 2011, as amended at 77 FR 14303, Mar. 9, 2012]

EFFECTIVE DATE NOTE: At 77 FR 14303, Mar. 9, 2012, § 54.1003, paragraph (b) was revised. This paragraph contains information and recordkeeping requirements and will not become effective until approval has been given by the Office of Management and Budget.

§ 54.1004 Service to Tribal Lands.

(a) A Tribally-owned or -controlled entity that has pending an application

to be designated an Eligible Telecommunications Carrier may participate in any Mobility Fund Phase I auction, including any auction for support solely in Tribal lands, by bidding for support in areas located within the boundaries of the Tribal land associated with the Tribe that owns or controls the entity. To bid on this basis, an entity shall certify that it is a Tribally-owned or -controlled entity and identify the applicable Tribe and Tribal lands in its application to participate in the competitive bidding. A Tribally-owned or -controlled entity shall receive Mobility Fund Phase I support only after it has become an Eligible Telecommunications Carrier.

(b) In any auction for support solely in Tribal lands, coverage units for purposes of conducting competitive bidding and disbursing support based on designated population will be identified by public notice for each census block eligible for support.

(c) Tribally-owned or -controlled entities may receive a bidding credit with respect to bids for support within the boundaries of associated Tribal lands. To qualify for a bidding credit, an applicant shall certify that it is a Tribally-owned or -controlled entity and identify the applicable Tribe and Tribal lands in its application to participate in the competitive bidding. An applicant that qualifies shall have its bid(s) for support in areas within the boundaries of Tribal land associated with the Tribe that owns or controls the applicant reduced by twenty-five (25) percent or purposes of determining winning bidders without any reduction in the amount of support available.

(d) A winning bidder for support in Tribal lands shall notify and engage the Tribal governments responsible for the areas supported.

(1) A winning bidder's engagement with the applicable Tribal government shall consist, at a minimum, of discussion regarding:

(i) A needs assessment and deployment planning with a focus on Tribal community anchor institutions;

(ii) Feasibility and sustainability planning;

(iii) Marketing services in a culturally sensitive manner;

(iv) Rights of way processes, land use permitting, facilities siting, environmental and cultural preservation review processes; and

(v) Compliance with Tribal business and licensing requirements.

(2) A winning bidder shall notify the appropriate Tribal government of its winning bid no later than five (5) business days after being identified by public notice as a winning bidder.

(3) A winning bidder shall certify in its application for support that it has substantively engaged appropriate Tribal officials regarding the issues specified in § 54.1004(d)(1), at a minimum, as well as any other issues specified by the Commission, and provide a summary of the results of such engagement. A copy of the certification and summary shall be sent to the appropriate Tribal officials when it is sent to the Commission.

(4) A winning bidder for support in Tribal lands shall certify in its annual report, pursuant to § 54.1009(a)(5), and prior to disbursement of support, pursuant to § 54.1008(c), that it has substantively engaged appropriate Tribal officials regarding the issues specified in § 54.1004(d)(1), at a minimum, as well as any other issues specified by the Commission, and provide a summary of the results of such engagement. A copy of the certification and summary shall be sent to the appropriate Tribal officials when it is sent to the Commission.

§ 54.1005 Application process.

(a) *Application to participate in competitive bidding for Mobility Fund Phase I support.* In addition to providing information specified in § 1.21001(b) of this chapter and any other information required by the Commission, an applicant to participate in competitive bidding for Mobility Fund Phase I support also shall:

(1) Provide ownership information as set forth in § 1.2112(a) of this chapter;

(2) Certify that the applicant is financially and technically capable of meeting the public interest obligations of § 54.1006 in each area for which it seeks support;

(3) Disclose its status as an Eligible Telecommunications Carrier in any area for which it will seek support or

as a Tribal entity with a pending application to become an Eligible Telecommunications Carrier in any such area, and certify that the disclosure is accurate;

(4) Describe the spectrum access that the applicant plans to use to meet obligations in areas for which it will bid for support, including whether the applicant currently holds a license for or leases the spectrum, and certify that the description is accurate and that the applicant will retain such access for at least five (5) years after the date on which it is authorized to receive support;

(5) Certify that it will not bid on any areas in which it has made a public commitment to deploy 3G or better wireless service by December 31, 2012; and

(6) Make any applicable certifications required in § 54.1004.

(b) *Application by winning bidders for Mobility Fund Phase I support.*—(1) *Deadline.* Unless otherwise provided by public notice, winning bidders for Mobility Fund Phase I support shall file an application for Mobility Fund Phase I support no later than 10 business days after the public notice identifying them as winning bidders.

(2) *Application contents.*—(i) Identification of the party seeking the support, including ownership information as set forth in § 1.2112(a) of this chapter.

(ii) Certification that the applicant is financially and technically capable of meeting the public interest obligations of § 54.1006 in the geographic areas for which it seeks support.

(iii) Proof of the applicant's status as an Eligible Telecommunications Carrier or as a Tribal entity with a pending application to become an Eligible Telecommunications Carrier in any area for which it seeks support and certification that the proof is accurate.

(iv) A description of the spectrum access that the applicant plans to use to meet obligations in areas for which it is the winning bidder for support, including whether the applicant currently holds a license for or leases the spectrum, and a certification that the description is accurate and that the applicant will retain such access for at least five (5) years after the date on which it is authorized to receive support.

(v) A detailed project description that describes the network, identifies the proposed technology, demonstrates that the project is technically feasible, discloses the budget and describes each specific phase of the project, *e.g.*, network design, construction, deployment, and maintenance. The applicant shall indicate whether the supported network will provide third generation (3G) mobile service within the period prescribed by § 54.1006(a) or fourth generation (4G) mobile service within the period prescribed by § 54.1006(b).

(vi) Certifications that the applicant has available funds for all project costs that exceed the amount of support to be received from Mobility Fund Phase I and that the applicant will comply with all program requirements.

(vii) Any guarantee of performance that the Commission may require by public notice or other proceedings, including but not limited to the letters of credit required in § 54.1007, or a written commitment from an acceptable bank, as defined in § 54.1007(a)(1), to issue such a letter of credit.

(viii) Certification that the applicant will offer service in supported areas at rates that are within a reasonable range of rates for similar service plans offered by mobile wireless providers in urban areas for a period extending until five (5) years after the date on which it is authorized to receive support.

(ix) Any applicable certifications and showings required in § 54.1004.

(x) Certification that the party submitting the application is authorized to do so on behalf of the applicant.

(xi) Such additional information as the Commission may require.

(3) *Application processing.* (i) No application will be considered unless it has been submitted in an acceptable form during the period specified by public notice. No applications submitted or demonstrations made at any other time shall be accepted or considered.

(ii) Any application that, as of the submission deadline, either does not identify the applicant seeking support as specified in the public notice announcing application procedures or

does not include required certifications shall be denied.

(iii) An applicant may be afforded an opportunity to make minor modifications to amend its application or correct defects noted by the applicant, the Commission, the Administrator, or other parties. Minor modifications include correcting typographical errors in the application and supplying nonmaterial information that was inadvertently omitted or was not available at the time the application was submitted.

(iv) Applications to which major modifications are made after the deadline for submitting applications shall be denied. Major modifications include, but are not limited to, any changes in the ownership of the applicant that constitute an assignment or change of control, or the identity of the applicant, or the certifications required in the application.

(v) After receipt and review of the applications, a public notice shall identify each winning bidder that may be authorized to receive Mobility Fund Phase I support after the winning bidder submits a Letter of Credit and an accompanying opinion letter as required by § 54.1007, in a form acceptable to the Commission, and any final designation as an Eligible Telecommunications Carrier that any Tribally-owned or -controlled applicant may still require. Each such winning bidder shall submit a Letter of Credit and an accompanying opinion letter as required by § 54.1007, in a form acceptable to the Commission, and any required final designation as an Eligible Telecommunications Carrier no later than 10 business days following the release of the public notice.

(vi) After receipt of all necessary information, a public notice will identify each winning bidder that is authorized to receive Mobility Fund Phase I support.

§ 54.1006 Public interest obligations.

(a) *Deadline for construction—3G networks.* A winning bidder authorized to receive Mobility Fund Phase I support that indicated in its application that it would provide third generation (3G) service on the supported network shall, no later than two (2) years after the date on which it was authorized to receive support, submit data from drive tests covering the area for which support was received demonstrating mobile transmissions supporting voice and data to and from the network covering 75% of the designated coverage units in the area deemed uncovered, or a higher percentage established by Public Notice prior to the competitive bidding, and meeting or exceeding the following:

(1) Outdoor minimum data transmission rates of 50 kbps uplink and 200 kbps downlink at vehicle speeds appropriate for the roads covered;

(2) Transmission latency low enough to enable the use of real time applications, such as VoIP.

(b) *Deadline for construction—4G networks.* A winning bidder authorized to receive Mobility Fund Phase I support that indicated in its application that it would provide fourth generation (4G) service on the supported network shall, no later than three (3) years after the date on which it was authorized to receive support, submit data from drive tests covering the area for which support was received demonstrating mobile transmissions supporting voice and data to and from the network covering 75% of the designated coverage units in the area deemed uncovered, or an applicable higher percentage established by public notice prior to the competitive bidding, and meeting or exceeding the following:

(1) Outdoor minimum data transmission rates of 200 kbps uplink and 768 kbps downlink at vehicle speeds appropriate for the roads covered;

(2) Transmission latency low enough to enable the use of real time applications, such as VoIP.

(c) *Coverage test data.* Drive tests submitted in compliance with a recipient's public interest obligations shall cover roads designated in the public notice detailing the procedures for the competitive bidding that is the basis of the recipient's support. Scattered site tests submitted in compliance with a recipient's public interest obligations shall be in compliance with standards set forth in the public notice detailing the procedures for the competitive bidding that is the basis of the recipient's authorized support.

(d) *Collocation obligations.* During the period when a recipient shall file annual reports pursuant to § 54.1009, the recipient shall allow for reasonable collocation by other providers of services that would meet the technological requirements of Mobility Fund Phase I on newly constructed towers that the recipient owns or manages in the area for which it receives support. In addition, during this period, the recipient may not enter into facilities access arrangements that restrict any party to the arrangement from allowing others to collocate on the facilities.

(e) *Voice and data roaming obligations.* During the period when a recipient shall file annual reports pursuant to § 54.1009, the recipient shall comply with the Commission's voice and data roaming requirements that were in effect as of October 27, 2011, on networks that are built through Mobility Fund Phase I support.

(f) *Liability for failing to satisfy public interest obligations.* A winning bidder authorized to receive Mobility Fund Phase I support that fails to comply with the public interest obligations in this paragraph or any other terms and conditions of the Mobility Fund Phase I support will be subject to repayment of the support disbursed together with an additional performance default payment. Such a winning bidder may be disqualified from receiving Mobility Fund Phase I support or other USF support. The additional performance default amount will be a percentage of the Mobility Fund Phase I support that the winning bidder has been and is eligible to request be disbursed to it pursuant to § 54.1008. The percentage will be determined as specified in the public notice detailing competitive bidding procedures prior to the commencement of competitive bidding. The percentage will not exceed twenty percent.

§ 54.1007 Letter of credit.

(a) Before being authorized to receive Mobility Fund Phase I support, a winning bidder shall obtain an irrevocable standby letter of credit which shall be acceptable in all respects to the Commission. Each winning bidder authorized to receive Mobility Fund Phase I support shall maintain its standby letter of credit or multiple standby letters of credit in an amount equal to the amount of Mobility Fund Phase I support that the winning bidder has been and is eligible to request be disbursed to it pursuant to § 54.1008 plus the additional performance default amount described in § 54.1006(f), until at least 120 days after the winning bidder receives its final distribution of support pursuant to § 54.1008(b)(3).

(1) The bank issuing the letter of credit shall be acceptable to the Commission. A bank that is acceptable to the Commission is

(i) Any United States Bank that

(A) Is among the 50 largest United States banks, determined on the basis of total assets as of the end of the calendar year immediately preceding the issuance of the letter of credit,

(B) Whose deposits are insured by the Federal Deposit Insurance Corporation, and

(C) Who has a long-term unsecured credit rating issued by Standard & Poor's of A- or better (or an equivalent rating from another nationally recognized credit rating agency); or

(ii) Any non-U.S. bank that

(A) Is among the 50 largest non-U.S. banks in the world, determined on the basis of total assets as of the end of the calendar year immediately preceding the issuance of the letter of credit (determined on a U.S. dollar equivalent basis as of such date),

(B) Has a branch office in the District of Columbia or such other branch office agreed to by the Commission,

(C) Has a long-term unsecured credit rating issued by a widely-recognized credit rating agency that is equivalent to an A- or better rating by Standard & Poor's, and

(D) Issues the letter of credit payable in United States dollars.

(2) [Reserved]

(b) A winning bidder for Mobility Fund Phase I support shall provide with its Letter of Credit an opinion letter from its legal counsel clearly stating, subject only to customary assumptions, limitations, and qualifications, that in a proceeding under Title 11 of the United States Code, 11 U.S.C. 101 *et seq.* (the ''Bankruptcy Code''), the bankruptcy court would not treat the letter of credit or proceeds of the letter of credit as property of the winning

bidder's bankruptcy estate under section 541 of the Bankruptcy Code.

(c) Authorization to receive Mobility Fund Phase I support is conditioned upon full and timely performance of all of the requirements set forth in § 54.1006 and any additional terms and conditions upon which the support was granted.

(1) Failure by a winning bidder authorized to receive Mobility Fund Phase I support to comply with any of the requirements set forth in § 54.1006 or any other term or conditions upon which support was granted, or its loss of eligibility for any reason for Mobility Fund Phase I support, will be deemed an automatic performance default, will entitle the Commission to draw the entire amount of the letter of credit, and may disqualify the winning bidder from the receipt of Mobility Fund Phase I support or additional USF support.

(2) A performance default will be evidenced by a letter issued by the Chief of either the Wireless Bureau or Wireline Bureau or their respective designees, which letter, attached to a standby letter of credit draw certificate, shall be sufficient for a draw on the standby letter of credit for the entire amount of the standby letter of credit.

§ 54.1008 Mobility Fund Phase I disbursements.

(a) A winning bidder for Mobility Fund Phase I support will be advised by public notice whether it has been authorized to receive support. The public notice will detail how disbursement will be made available.

(b) Mobility Fund Phase I support will be available for disbursement to authorized winning bidders in three stages.

(1) One-third of the total possible support, if coverage were to be extended to 100 percent of the units deemed unserved in the geographic area, when the winning bidder is authorized to receive support.

(2) One-third of the total possible support with respect to a specific geographic area when the recipient demonstrates coverage of 50 percent of the coverage requirements of § 54.1006(a) or (b), as applicable.

(3) The remainder of the total support, based on the final total units covered, when the recipient demonstrates coverage meeting the requirements of § 54.1006(a) or (b), as applicable.

(c) A recipient accepting a final disbursement for a specific geographic area based on coverage of less than 100 percent of the units in the area previously deemed unserved waives any claim for the remainder of potential Mobility Fund Phase I support with respect to that area.

(d) Prior to each disbursement request, a winning bidder for support in a Tribal land will be required to certify that it has substantively engaged appropriate Tribal officials regarding the issues specified in § 54.1004(d)(1), at a minimum, as well as any other issues specified by the Commission and to provide a summary of the results of such engagement.

(e) Prior to each disbursement request, a winning bidder will be required to certify that it is in compliance with all requirements for receipt of Mobility Fund Phase I support at the time that it requests the disbursement.

§ 54.1009 Annual reports.

(a) A winning bidder authorized to receive Mobility Fund Phase I support shall submit an annual report no later than July 1 in each year for the five years after it was so authorized. Each annual report shall include the following, or reference the inclusion of the following in other reports filed with the Commission for the applicable year:

(1) Electronic Shapefiles site coverage plots illustrating the area newly reached by mobile services at a minimum scale of 1:240,000;

(2) A list of relevant census blocks previously deemed unserved, with road miles and total resident population and resident population residing in areas newly reached by mobile services (based on Census Bureau data and estimates);

(3) If any such testing has been conducted, data received or used from drive tests, or scattered site testing in areas where drive tests are not feasible, analyzing network coverage for mobile services in the area for which support was received;

(4) Certification that the applicant offers service in supported areas at rates that are within a reasonable range of rates for similar service plans offered by mobile wireless providers in urban areas;

(5) Any applicable certifications and showings required in § 54.1004; and

(6) Updates to the information provided in § 54.1005(b)(2)(v).

(b) The party submitting the annual report must certify that they have been authorized to do so by the winning bidder.

(c) Each annual report shall be submitted to the Office of the Secretary of the Commission, clearly referencing WT Docket No. 10–208; the Administrator; and the relevant state commissions, relevant authority in a U.S. Territory, or Tribal governments, as appropriate.

[76 FR 73877, Nov. 29, 2011, as amended at 77 FR 30915, May 24, 2012]

§ 54.1010 Record retention for Mobility Fund Phase I.

A winning bidder authorized to receive Mobility Fund Phase I support and its agents are required to retain any documentation prepared for, or in connection with, the award of Mobility Fund Phase I support for a period of not less than ten (10) years after the date on which the winning bidder receives its final disbursement of Mobility Fund Phase I support.

Subpart M—High Cost Loop Support for Rate-of-Return Carriers

SOURCE: 79 FR 39190, July 9, 2014, unless otherwise noted.

§ 54.1301 General.

(a) This subpart addresses support for loop-related costs included in § 54.1308. The expense adjustment calculated pursuant to this subpart M shall be added to interstate expenses and deducted from state expenses after expenses and taxes have been apportioned pursuant to subpart D of part 36 of this chapter. Beginning January 1, 2012, this subpart will only apply to incumbent local exchange carriers that are rate-of-return carriers not affiliated, as ''affiliated companies'' are defined in § 32.9000 of this chapter, with price cap local exchange carriers. Rate-of-return carriers and price cap local exchange carriers are defined pursuant to § 54.5 and § 61.3(bb) of this chapter, respectively.

(b) The expense adjustment will be computed on the basis of data for a preceding calendar year which may be updated at the option of the carrier pursuant to § 54.1306(a).

§ 54.1302 Calculation of incumbent local exchange carrier portion of nationwide loop cost expense adjustment for rate-of-return carriers.

(a) Beginning January 1, 2013, and each calendar year thereafter, the total annual amount of the incumbent local exchange carrier portion of the nationwide loop cost expense adjustment shall not exceed the amount for the immediately preceding calendar year, multiplied times one plus the Rural Growth Factor calculated pursuant to § 54.1303.

(b) The annual rural incumbent local exchange carrier portion of the nationwide loop cost expense adjustment shall be reduced to reflect the transfer of rural incumbent local exchange carrier access lines that are eligible for expense adjustments pursuant to § 54.1310. The reduction shall equal the amount of the § 54.1310 expense adjustment available to the transferred access lines at the time of the transfer and shall be effective in the next calendar quarter after the access lines are transferred.

(c) Safety net additive support calculated pursuant to § 54.1304, and transferred high-cost support and safety valve support calculated pursuant to § 54.305 of this part shall not be included in the rural incumbent local exchange carrier portion of the annual nationwide loop cost expense adjustment.

§ 54.1303 Calculation of the rural growth factor.

(a) The Rural Growth Factor (RGF) is equal to the sum of the annual percentage change in the United States Department of Commerce's Gross Domestic Product—Chained Price Index (GPD–CPI) plus the percentage change in the total number of rural incumbent

local exchange carrier working loops during the calendar year preceding the July 31st filing submitted pursuant to § 54.1305. The percentage change in total rural incumbent local exchange carrier working loops shall be based upon the difference between the total number of rural incumbent local exchange carrier working loops on December 31 of the calendar year preceding the July 31st filing and the total number of rural incumbent local exchange carrier working loops on December 31 of the second calendar year preceding that filing, both determined by the company's submissions pursuant to § 54.1305. Loops acquired by rural incumbent local exchange carriers shall not be included in the RGF calculation.

(b) Beginning July 31, 2012, pursuant to § 54.1301(a), the calculation of the Rural Growth Factor shall not include price cap carrier working loops and rate-of-return local exchange carrier working loops of companies that were affiliated with price cap carriers during the calendar year preceding the July 31st filing submitted pursuant to § 54.1305.

§ 54.1304 Calculation of safety net additive.

(a) *Safety net additive support.* Only those local exchange carriers that qualified for safety net additive based on 2011 or prior year costs shall be eligible to receive safety net additive pursuant to paragraph (c) of this section. A local exchange carrier shall not receive safety net additive unless the carrier's realized total growth in Telecommunications Plant in Service (TPIS) was more than 14 percent in 2011 or earlier, pursuant to paragraph (c) of this section.

(b) *Calculation of safety net additive support for companies that qualified based on 2011 or prior year costs.* Safety net additive support is equal to the amount of capped support calculated pursuant to this subpart M in the qualifying year minus the amount of support in the year prior to qualifying for support subtracted from the difference between the uncapped expense adjustment for the study area in the qualifying year minus the uncapped expense adjustment in the year prior to qualifying for support as shown in the following equation: Safety net additive support = (Uncapped support in the qualifying year − Uncapped support in the base year) − (Capped support in the qualifying year − Amount of support received in the base year).

(c) *Operation of safety net additive support for companies that qualified based on 2011 or prior year costs.* (1) In any year in which the total carrier loop cost expense adjustment is limited by the provisions of § 54.1302, a rate-of-return incumbent local exchange carrier shall receive safety net additive support as calculated in paragraph (b) of this section, if in any study area, the rural incumbent local exchange carrier realizes growth in end of period TPIS, as prescribed in § 32.2001, on a per loop basis, of at least 14 percent more than the study area's TPIS per loop investment at the end of the prior period.

(2) If paragraph (c)(1) of this section is met, the rural incumbent local exchange carrier must notify the Administrator; failure to properly notify the Administrator of eligibility shall result in disqualification of that study area for safety net additive, requiring the rural incumbent local exchange carrier to again meet the eligibility requirements in paragraph (c)(1) of this section for that study area in a subsequent period.

(3) Upon completion of verification by the Administrator that the study area meets the stated criterion in paragraphs (a), (b), or (c) of this section, the Administrator shall:

(i) Pay to any qualifying rural telephone company safety net additive support for the qualifying study area in accordance with the calculation set forth in paragraph (b) of this section; and

(ii) Continue to pay safety net additive support in any of the four succeeding years in which the total carrier loop expense adjustment is limited by the provisions of § 54.1302. Safety net additive support in the succeeding four years shall be the lesser of:

(A) The sum of capped support and the safety net additive support received in the qualifying year; or

(B) The rural telephone company's uncapped support.

§ 54.1305 Submission of information to the National Exchange Carrier Association (NECA)

(a) In order to allow determination of the study areas and wire centers that are entitled to an expense adjustment pursuant to § 54.1310, each incumbent local exchange carrier (LEC) must provide the National Exchange Carrier Association (NECA) (established pursuant to part 69 of this chapter) with the information listed for each study area in which such incumbent LEC operates, with the exception of the information listed in paragraph (h) of this section, which must be provided for each study area. This information is to be filed with NECA by July 31st of each year. The information provided pursuant to paragraph (i) of this section must be updated pursuant to § 54.1306. Rural telephone companies that acquired exchanges subsequent to May 7, 1997, and incorporated those acquired exchanges into existing study areas shall separately provide the information required by paragraphs (b) through (i) of this section for both the acquired and existing exchanges.

(b) Unseparated, i.e., state and interstate, gross plant investment in Exchange Line Cable and Wire Facilities (C&WF) Subcategory 1.3 and Exchange Line Central Office (CO) Circuit Equipment Category 4.13. This amount shall be calculated as of December 31st of the calendar year preceding each July 31st filing.

(c) Unseparated accumulated depreciation and noncurrent deferred federal income taxes, attributable to Exchange Line C&WF Subcategory 1.3 investment, and Exchange Line CO Circuit Equipment Category 4.13 investment. These amounts shall be calculated as of December 31st of the calendar year preceding each July 31st filing, and shall be stated separately.

(d) Unseparated depreciation expense attributable to Exchange Line C&WF Subcategory 1.3 investment, and Exchange Line CO Circuit Equipment Category 4.13 investment. This amount shall be the actual depreciation expense for the calendar year preceding each July 31st filing.

(e) Unseparated maintenance expense attributable to Exchange Line C&WF Subcategory 1.3 investment and Exchange Line CO Circuit Equipment Category 4.113 investment. This amount shall be the actual repair expense for the calendar year preceding each July 31st filing.

(f) Unseparated corporate operations expenses, operating taxes, and the benefits and rent proportions of operating expenses. The amount for each of these categories of expense shall be the actual amount for that expense for the calendar year preceding each July 31st filing. The amount for each category of expense listed shall be stated separately.

(g) Unseparated gross telecommunications plant investment. This amount shall be calculated as of December 31st of the calendar year preceding each July 31st filing.

(h) Unseparated accumulated depreciation and noncurrent deferred federal income taxes attributable to local unseparated telecommunications plant investment. This amount shall be calculated as of December 31st of the calendar year preceding each July 31st filing.

(i) The number of working loops for each study area. For universal service support purposes, working loops are defined as the number of working Exchange Line C&WF loops used jointly for exchange and message telecommunications service, including C&WF subscriber lines associated with pay telephones in C&WF Category 1, but excluding WATS closed end access and TWX service. These figures shall be calculated as of December 31st of the calendar year preceding each July 31st filing.

§ 54.1306 Updating Information Submitted to the National Exchange Carrier Association.

(a) Any incumbent local exchange carrier subject to § 54.1301(a) may update the information submitted to the National Exchange Carrier Association (NECA) on July 31st pursuant to § 54.1305 one or more times annually on a rolling year basis according to the schedule.

(1) Submit data covering the last nine months of the previous calendar year and the first three months of the existing calendar year no later than September 30th of the existing year;

(2) Submit data covering the last six months of the previous calendar year and the first six months of the existing calendar year no later than December 30th of the existing year;

(3) Submit data covering the last three months of the second previous calendar year and the first nine months of the previous calendar year no later than March 30th of the existing year.

(b) [Reserved]

§ 54.1307 Submission of Information by the National Exchange Carrier Association.

(a) On October 1 of each year, the National Exchange Carrier Association (NECA) shall file with the Commission and Administrator the information listed below. Information filed with the Commission shall be compiled from information provided to NECA by telephone companies pursuant to § 54.1305.

(1) The unseparated loop cost for each study area and a nationwide-average unseparated loop cost.

(2) The annual amount of the high cost expense adjustment for each study area, and the total nationwide amount of the expense adjustment.

(3) The dollar amount and percentage of the increase in the nationwide average unseparated loop cost, as well as the dollar amount and percentage increase for each study area, for the previous 5 years, or the number of years NECA has been receiving this information, whichever is the shorter time period.

(b) [Reserved]

§ 54.1308 Study Area Total Unseparated Loop Cost.

(a) For the purpose of calculating the expense adjustment, the study area total unseparated loop cost equals the sum of the following:

(1) Return component for net unseparated Exchange Line C&WF subcategory 1.3 investment and Exchange Line CO Circuit Equipment Category 4.13 investment. This amount is calculated by deducting the accumulated depreciation and noncurrent deferred Federal income taxes attributable to C&WF Subcategory 1.3 investment and Exchange Line Category 4.13 circuit investment reported pursuant to § 54.1305(b) from the gross investment in Exchange Line C&WF Subcategory 1.3 and CO Category 4.13 reported pursuant to § 54.1305(a) to obtain the net unseparated C&WF Subcategory 1.3 investment, and CO Category 4.13 investment. The net unseparated C&WF Subcategory 1.3 investment and CO Category 4.13 investment is multiplied by the study area's authorized interstate rate of return.

(2) Depreciation expense attributable to C&WF Subcategory 1.3 investment, and CO Category 4.13 investment as reported in § 54.1305(c).

(3) Maintenance expense attributable to C&WF Subcategory 1.3 investment, and CO Category 4.13 investment as reported in § 54.1305(d).

(4) Corporate Operations Expenses, Operating Taxes and the benefits and rent portions of operating expenses, as reported in § 54.1305(e) attributable to investment in C&WF Category 1.3 and COE Category 4.13. This amount is calculated by multiplying the total amount of these expenses and taxes by the ratio of the unseparated gross exchange plant investment in C&WF Category 1.3 and COE Category 4.13, as reported in § 54.1305(a), to the unseparated gross telecommunications plant investment, as reported in § 54.1305(f). Total Corporate Operations Expense for purposes of calculating high-cost loop support payments beginning January 1, 2012 shall be limited to the lesser of § 54.1308(a)(4)(i) or (ii).

(i) The actual average monthly per-loop Corporate Operations Expense; or

(ii) A monthly per-loop amount computed according to paragraphs (a)(4)(ii)(A), (a)(4)(ii)(B), (a)(4)(ii)(C), and (a)(4)(ii)(D) of this section. To the extent that some carriers' corporate operations expenses are disallowed pursuant to these limitations, the national average unseparated cost per loop shall be adjusted accordingly.

(A) For study areas with 6,000 or fewer total working loops the amount monthly per working loop shall be $42.337 − (.00328 × the number of total working loops), or, $63,000/the number of total working loops, whichever is greater;

(B) For study areas with more than 6,000 but fewer than 17,887 total working loops, the monthly amount per

working loop shall be $3.007 + (117,990/ the number of total working loops); and

(C) For study areas with 17,887 or more total working loops, the monthly amount per working loop shall be $9.562.

(D) Beginning January 1, 2013, the monthly per-loop amount computed according to paragraphs (a)(4)(ii)(A), (a)(4)(ii)(B), and (a)(4)(ii)(C) of this section shall be adjusted each year to reflect the annual percentage change in the United States Department of Commerce's Gross Domestic Product-Chained Price Index (GDP–CPI).

(b) [Reserved]

§ 54.1309 National and study area average unseparated loop costs.

(a) *National average unseparated loop cost per working loop.* Except as provided in paragraph (c) of this section, this is equal to the sum of the Loop Costs for each study area in the country as calculated pursuant to § 54.1308(a) divided by the sum of the working loops reported in § 54.1305(h) for each study area in the country. The national average unseparated loop cost per working loop shall be calculated by the National Exchange Carrier Association. Beginning July 1, 2001, the national average unseparated loop cost for purposes of calculating expense adjustments for rural incumbent local exchange carriers, as that term is defined in § 54.5 of this part is frozen at $240.00.

(1) The national average unseparated loop cost per working loop shall be recalculated by the National Exchange Carrier Association to reflect the September, December, and March update filings.

(2) Each new nationwide average shall be used in determining the additional interstate expense allocation for companies which made filings by the most recent filing date.

(3) The calculation of a new national average to reflect the update filings shall not affect the amount of the additional interstate expense allocation for companies which did not make an update filing by the most recent filing date.

(b) *Study area average unseparated loop cost per working loop.* This is equal to the unseparated loop costs for the study area as calculated pursuant to § 54.1308(a) divided by the number of working loops reported in § 54.1305(i) for the study area.

(1) If a company elects to, or is required to, update the data which it has filed with the National Exchange Carrier Association as provided in § 54.1306(a), the study area average unseparated loop cost per working loop and the amount of its additional interstate expense allocation shall be recalculated to reflect the updated data.

(2) [Reserved]

(c) The national average inseparated loop Cost per working loop shall be the greater of:

(1) The amount calculated pursuant to the method described in paragraph (a) of this section; or

(2) Beginning July 1, 2001, for rural carriers, an amount calculated to produce the maximum rural incumbent local exchange carrier portion of nationwide loop cost expense adjustment allowable pursuant to § 54.1302(a).

§ 54.1310 Expense adjustment.

(a) [Reserved]

(b) [Reserved]

(c) Beginning January 1, 1988, for study areas reporting 200,000 or fewer working loops pursuant to § 54.1305(h), the expense adjustment (additional interstate expense allocation) is equal to the sum of paragraphs (c)(1) through (2) of this section.

(1) Sixty-five percent of the study area average unseparated loop cost per working loop as calculated pursuant to § 54.1309(b) in excess of 115 percent of the national average for this cost but not greater than 150 percent of the national average for this cost as calculated pursuant to § 54.1309(a) multiplied by the number of working loops reported in § 54.1305(h) for the study area; and

(2) Seventy-five percent of the study area average unseparated loop cost per working loop as calculated pursuant to § 54.1309(b) in excess of 150 percent of the national average for this cost as calculated pursuant to § 54.1309(a) multiplied by the number of working loops reported in § 54.1305(h) for the study area.

(d) Beginning April 1, 1989, the expense adjustment calculated pursuant

to §54.1310(c) shall be adjusted each year to reflect changes in the amount of high-cost loop support resulting from adjustments calculated pursuant to §54.1306(a) made during the previous year. If the resulting amount exceeds the previous year's fund size, the difference will be added to the amount calculated pursuant to §54.1310(c) for the following year. If the adjustments made during the previous year result in a decrease in the size of the funding requirement, the difference will be subtracted from the amount calculated pursuant to §54.1310(c) for the following year.

PART 59—INFRASTRUCTURE SHARING

Sec.

59.1 General duty.
59.2 Terms and conditions of infrastructure sharing.
59.3 Information concerning deployment of new services and equipment.
59.4 Definition of ''qualifying carrier''.

AUTHORITY: 47 U.S.C. 154(i), 154(j), 201–205, 259, 303(r), 403.

SOURCE: 62 FR 9713, Mar. 4, 1997, unless otherwise noted.

§59.1 General duty.

Incumbent local exchange carriers (as defined in 47 U.S.C. section 251(h)) shall make available to any qualifying carrier such public switched network infrastructure, technology, information, and telecommunications facilities and functions as may be requested by such qualifying carrier for the purpose of enabling such qualifying carrier to provide telecommunications services, or to provide access to information services, in the service area in which such qualifying carrier has obtained designation as an eligible telecommunications carrier under section 214(e) of 47 U.S.C.

§59.2 Terms and conditions of infrastructure sharing.

(a) An incumbent local exchange carrier subject to the requirements of section 59.1 shall not be required to take any action that is economically unreasonable or that is contrary to the public interest.

(b) An incumbent local exchange carrier subject to the requirements of section 59.1 may, but shall not be required to, enter into joint ownership or operation of public switched network infrastructure, technology, information and telecommunications facilities and functions and services with a qualifying carrier as a method of fulfilling its obligations under section 59.1.

(c) An incumbent local exchange carrier subject to the requirements of section 59.1 shall not be treated by the Commission or any State as a common carrier for hire or as offering common carrier services with respect to any public switched network infrastructure, technology, information, or telecommunications facilities, or functions made available to a qualifying carrier in accordance with regulations issued pursuant to this section.

(d) An incumbent local exchange carrier subject to the requirements of section 59.1 shall make such public switched network infrastructure, technology, information, and telecommunications facilities, or functions available to a qualifying carrier on just and reasonable terms and pursuant to conditions that permit such qualifying carrier to fully benefit from the economies of scale and scope of such local exchange carrier. An incumbent local exchange carrier that has entered into an infrastructure sharing agreement pursuant to section 59.1 must give notice to the qualifying carrier at least sixty days before terminating such infrastructure sharing agreement.

(e) An incumbent local exchange carrier subject to the requirements of section 59.1 shall not be required to engage in any infrastructure sharing agreement for any services or access which are to be provided or offered to consumers by the qualifying carrier in such local exchange carrier's telephone exchange area.

(f) An incumbent local exchange carrier subject to the requirements of section 59.1 shall file with the State, or, if the State has made no provision to accept such filings, with the Commission, for public inspection, any tariffs, contracts, or other arrangements showing the rates, terms, and conditions under which such carrier is making available

public switched network infrastructure, technology, information and telecommunications facilities and functions pursuant to this part.

§ 59.3 Information concerning deployment of new services and equipment.

An incumbent local exchange carrier subject to the requirements of section 59.1 that has entered into an infrastructure sharing agreement under section 59.1 shall provide to each party to such agreement timely information on the planned deployment of telecommunications services and equipment, including any software or upgrades of software integral to the use or operation of such telecommunications equipment.

§ 59.4 Definition of "qualifying carrier".

For purposes of this part, the term ''qualifying carrier'' means a telecommunications carrier that:

(a) Lacks economies of scale or scope; and

(b) Offers telephone exchange service, exchange access, and any other service that is included in universal service, to all consumers without preference throughout the service area for which such carrier has been designated as an eligible telecommunications carrier under section 214(e) of 47 U.S.C.

PART 61—TARIFFS

Subpart A—General

Sec.
61.1 Purpose and application.
61.2 General tariff requirements.
61.3 Definitions.
61.11–61.12 [Reserved]

Subpart B—Rules for Electronic Filing

61.13 Scope.
61.14 Method of filing publications.
61.15 Letters of transmittal and cover letters.
61.16 Base documents.
61.17 Applications for special permission.

Subpart C—General Rules for Nondominant Carriers

61.18 Scope.
61.19 Detariffing of international and interstate, domestic interexchange services.
61.20 Method of filing publications.
61.25 References to other instruments.
61.26 Tariffing of competitive interstate switched exchange access services.

Subpart D—General Tariff Rules for International Dominant Carriers

61.28 International dominant carrier tariff filing requirements.

Subpart E—General Rules for Dominant Carriers

61.38 Supporting information to be submitted with letters of transmittal.
61.39 Optional supporting information to be submitted with letters of transmittal for Access Tariff filings by incumbent local exchange carriers serving 50,000 or fewer access lines in a given study area that are described as subset 3 carriers in § 69.602.
61.40 Private line rate structure guidelines.
61.41 Price cap requirements generally.
61.42 Price cap baskets and service categories.
61.43 Annual price cap filings required.
61.44 [Reserved]
61.45 Adjustments to the PCI for Local Exchange Carriers.
61.46 Adjustments to the API.
61.47 Adjustments to the SBI; pricing bands.
61.48 Transition rules for price cap formula calculations.
61.49 Supporting information to be submitted with letters of transmittal for tariffs of carriers subject to price cap regulation.
61.50 [Reserved]

Subpart F—Formatting and Notice Requirements for Tariff Publications

61.51 Scope.
61.52 Form, size, type, legibility, etc.
61.54 Composition of tariffs.
61.55 Contract-based tariffs.
61.58 Notice requirements.
61.59 Effective period required before changes.

Subpart G—Specific Rules for Tariff Publications of Dominant and Nondominant Carriers

61.66 Scope.
61.68 Special notations.
61.69 Rejection.
61.72 Public information requirements.
61.73 Duplication of rates or regulations.
61.74 References to other instruments.
61.83 Consecutive numbering.
61.86 Supplements.
61.87 Cancellation of tariffs.

Subpart H—Concurrences

61.131 Scope.

61.132 Method of filing concurrences.
61.133 Format of concurrences.
61.134 Concurrences for through services.
61.135 Concurrences for other purposes.
61.136 Revocation of concurrences.

Subpart I—Adoption of Tariffs and Other Documents of Predecessor Carriers

61.171 Adoption notice.
61.172 Changes to be incorporated in tariffs of successor carrier.

Subpart J—Suspensions

61.191 Carrier to file supplement when notified of suspension.
61.192 Contents of supplement announcing suspension.
61.193 Vacation of suspension order; supplements announcing same; etc.

AUTHORITY: Secs. 1, 4(i), 4(j), 201–205 and 403 of the Communications Act of 1934, as amended; 47 U.S.C. 151, 154(i), 154(j), 201–205 and 403, unless otherwise noted.

SOURCE: 49 FR 40869, Oct. 18, 1984, unless otherwise noted.

Subpart A—General

§61.1 Purpose and application.

(a) The purpose of this part is to prescribe the framework for the initial establishment of and subsequent revisions to tariff publications.

(b) Tariff publications filed with the Commission must conform to the rules in this part and with Commission rules regarding the payment of statutory charges (see subpart G of part 1 of this title) and the use of FCC Registration Numbers (FRNs) (see subpart W of part 1 of this title). Failure to comply with any provisions of these rules may be grounds for rejection of the non-complying publication, a determination that it is unlawful or other action. Where an FRN has been omitted from a cover letter or transmittal accompanying a tariff publication filed under this part or the FRN included in that letter is invalid, the submitting carrier or carrier representative shall have ten (10) business days from the date of filing to amend the cover letter or transmittal to include a valid FRN. If within that ten (10) business day period, the carrier or carrier representative amends the cover letter or transmittal to include a valid FRN, that FRN shall be deemed to have been included in the letter as of its original filing date. If, after the expiration of the ten (10) business day period, the cover letter or transmittal has not been amended to include a valid FRN, the related tariff publication may be rejected if it has not yet become effective, declared unlawful if it has become effective, or subject to other action.

(c) No carrier required to file tariffs may provide any interstate or foreign communication service until every tariff publication for such communication service is on file with the Commission and in effect.

[49 FR 40869, Oct. 18, 1984, as amended at 66 FR 47896, Sept. 14, 2001]

§61.2 General tariff requirements.

(a) In order to remove all doubt as to their proper application, all tariff publications must contain clear and explicit explanatory statements regarding the rates and regulations.

(b) Tariff publications must be delivered to the Commission free from all charges, including claims of postage.

(c) Tariff publications will not be returned.

[64 FR 46586, Aug. 26, 1999]

§61.3 Definitions.

(a) *Act*. The Communications Act of 1934 (48 Stat. 1004; 47 U.S.C. chapter 5), as amended.

(b) *Actual Price Index* (API). An index of the level of aggregate rate element rates in a basket, which index is calculated pursunt to §61.46.

(c) *Association*. This term has the meaning given it in §69.2(d).

(d) *Average Price Cap CMT Revenue per Line month*. (1) Price Cap CMT Revenue (as defined in §61.3(cc)) per month as of July 1, 2000 (adjusted to remove Universal Service Contributions assessed to local exchange carriers pursuant to §54.702 of this chapter) using 2000 annual filing base period demand, divided by the 2000 annual filing base period demand. In filing entities with multiple study areas, if it becomes necessary to calculate the Average Price Cap CMT Revenue per Line month for a specific study area, then the Average Price Cap CMT Revenue per Line

month for that study area is determined as follows, using base period demand revenues (adjusted to remove Universal Service Contributions assessed to Local Exchange Carriers pursuant to § 54.702 of this chapter), Base Factor Portion (BFP) and 2000 annual filing base period lines:

Average Price Cap CMT Revenue per Line Month in a study area = Price Cap CMT Revenue × (BFP in the study area ÷ (BFP in the Filing Entity) ÷(Lines in the study area.

(2) Nothing in this definition precludes a price cap local exchange carrier from continuing to average rates across filing entities containing multiple study areas, where permitted under existing rules.

(3) Average Price Cap CMT Revenues per Line month may be adjusted after July 1, 2000 to reflect exogenous costs pursuant to § 61.45(d).

(4) Average Price Cap CMT Revenues per Line month may also be adjusted pursuant to § 61.45 (b)(1)(iii).

(e) *Average Traffic Sensitive Charge.* (1) The Average Traffic Sensitive Charge (ATS charge) is the sum of the following two components:

(i) The Local Switching (LS) component. The LS component will be calculated by dividing the proposed LS revenues (End Office Switch, LS trunk ports, Information Surcharge, and signalling transfer point (STP) port) by the base period LS minutes of use (MOUs); and

(ii) The Transport component. The Transport component will be calculated by dividing the proposed Transport revenues (Switched Direct Trunk Transport, Signalling for Switched Direct Trunk Transport, Entrance Facilities for Switched Access traffic, Tandem Switched Transport, Signalling for Tandem Switching and residual per minute Transport Interconnection Charge (TIC) pursuant to § 69.155 of this chapter) by price cap local exchange carrier only base period MOUs (including meet-point billing arrangements for jointly-provided interstate access by a price cap local exchange carrier and any other local exchange carrier).

(2) For the purposes of determining whether the ATS charge has reached the Target Rate as set forth in § 61.3(qq), the calculations should include all the relevant revenues and minutes for services provided under generally available price cap tariffs.

(f) *Band.* A zone of pricing flexibility for a service category, which zone is calculated pursuant to § 61.47.

(g) *Base period.* For carriers subject to §§ 61.41 through 61.49, the 12-month period ending six months prior to the effective date of annual price cap tariffs. Base year or base period earnings shall exclude amounts associated with exogenous adjustments to the PCI for the lower formula adjustment mechanism permitted by § 61.45(d)(1)(vii).

(h) *Basket.* Any class or category of tariffed service or charge:

(1) Which is established by the Commission pursuant to price cap regulation;

(2) The rates of which are reflected in an Actual Price Index; and

(3) The related revenues of which are reflected in a Price Cap Index.

(i) *Change in rate structure.* A restructuring or other alteration of the rate components for an existing service.

(j) *Charges.* The price for service based on tariffed rates.

(k) *Commercial contractor.* The commercial firm to whom the Commission annually awards a contract to make copies of Commission records for sale to the public.

(l) *Commission.* The Federal Communications Commission.

(m) *Concurring carrier.* A carrier (other than a connecting carrier) subject to the Act which concurs in and assents to schedules of rates and regulations filed on its behalf by an issuing carrier or carriers.

(n) *Connecting carrier.* A carrier engaged in interstate or foreign communication solely through physical connection with the facilities of another carrier not directly or indirectly controlling or controlled by, or under direct or indirect common control with, such carrier.

(o) *Contract-based tariff.* A tariff based on a service contract entered into between a non-dominant carrier and a customer, or between a customer and a price cap local exchange carrier which has obtained permission to offer contract-based tariff services pursuant to part 69, subpart H, of this chapter.

(p) *Corrections*. The remedy of errors in typing, spelling, or punctuation.

(q) *Dominant carrier*. A carrier found by the Commission to have market power (*i.e.*, power to control prices).

(r) *GDP Price Index (GDP-PI)*. The estimate of the Chain-Type Price Index for Gross Domestic Product published by the United States Department of Commerce, which the Commission designates by Order.

(s) *GNP Price Index (GNP-PI)*. The estimate of the ''Fixed-Weighted Price Index for Gross National Product, 1982 Weights'' published by the United States Department of Commerce, which the Commission designates by Order.

(t) *Incumbent Local Exchange Carrier*. ''*Incumbent Local Exchange Carrier*'' or ''ILEC'' has the same meaning as that term is defined in 47 U.S.C. 251(h).

(u) *Issuing carrier*. A carrier subject to the Act that publishes and files a tariff or tariffs with the Commission.

(v) *Line month*. Line demand per month multiplied by twelve.

(w) *Local exchange carrier*. Any person that is engaged in the provision of telephone exchange service or exchange access as defined in section 3(26) of the Act.

(x) *Mid-size company*. All price cap local exchange carriers other than the Regional Bell Operating Companies and GTE.

(y) *New service offering*. A tariff filing that provides for a class or sub-class of service not previously offered by the carrier involved and that enlarges the range of service options available to ratepayers.

(z) *Non-dominant carrier*. A carrier not found to be dominant. The nondominant status of providers of international interexchange services for purposes of this subpart is not affected by a carrier's classification as dominant under §63.10 of this chapter.

(aa) *Other participating carrier*. A carrier subject to the Act that publishes a tariff containing rates and regulations applicable to the portion or through service it furnishes in conjunction with another subject carrier.

(bb) *Price Cap Local Exchange Carrier*. A local exchange carrier subject to regulation pursuant to §61.41 through 61.49.

(cc) *Pooled Local Switching Revenue*. For certain qualified companies as set forth in §61.48 (m), is the amount of additional local switching reductions in the July 2000 Annual filing allowed to be moved and recovered in the CMT basket.

(dd) *Price Cap CMT Revenue*. The maximum total revenue a filing entity would be permitted to receive from End User Common Line charges under §69.152 of this chapter, Presubscribed Interexchange Carrier charges (PICCs) under §69.153 of this chapter, Carrier Common Line charges under §69.154 of this chapter, and Marketing under §69.156 of this chapter, using Base Period lines. Price Cap CMT Revenue does not include the price cap local exchange carrier universal service contributions as of July 1, 2000. The Price Cap CMT revenue does not include the pooled local switching revenue outlined in paragraph (bb) of this section.

(ee) *Price Cap Index (PCI)*. An index of prices applying to each basket of services of each carrier subject to price cap regulation, and calculated pursuant to §61.45.

(ff) *Price cap regulation*. A method of regulation of dominant carriers provided in §§61.41 through 61.49.

(gg) *Price cap tariff filing*. Any tariff filing involving a service subject to price cap regulation, or that requires calculations pursuant to §§61.45, 61.46, or 61.47.

(hh) [Reserved]

(ii) *Rate*. The tariffed price per unit of service.

(jj) *Rate increase*. Any change in a tariff which results in an increased rate or charge to any of the filing carrier's customers.

(kk) *Rate level change*. A tariff change that only affects the actual rate associated with a rate element, and does not affect any tariff regulations or any other wording of tariff language.

(ll) *Regulations*. The body of carrier prescribed rules in a tariff governing the offering of service in that tariff, including rules, practices, classifications, and definitions.

(mm) *Restructured service*. An offering which represents the modification of a method of charging or provisioning a service; or the introduction of a new method of charging or provisioning

that does not result in a net increase in options available to customers.

(nn) *Rural Company*. A company that, as of December 31, 1999, was certified to the Commission as a rural telephone company.

(oo) *Service Band Index (SBI)*. An index of the level of aggregate rate element rates in a service category, which index is calculated pursuant to § 61.47.

(pp) *Service category*. Any group of rate elements subject to price cap regulation, which group is subject to a band.

(qq) *Supplement*. A publication filed as part of a tariff for the purpose of suspending or canceling that tariff, or tariff publication and numbered independently from the tariff page series.

(rr) *Target Rate*. The applicable Target Rate shall be defined as follows:

(1) For regional Bell Operating Companies and GTE, $0.0055 per ATS minute of use;

(2) For a holding company with a holding company average of less than 19 Switched Access End User Common Line charge lines per square mile served such company may elect to use a Target Rate of $0.0095 with respect to all exchanges owned by that holding company on July 1, 2000, or which that holding company is, as of April 1, 2000, under a binding and executed contract to purchase;

(3) For other price cap local exchange carriers, $0.0065 per ATS minute of use.

(ss) *Tariff*. Schedules of rates and regulations filed by common carriers.

(tt) *Tariff publication, or publication*. A tariff, supplement, revised page, additional page, concurrence, notice of revocation, adoption notice, or any other schedule of rates or regulations filed by common carriers.

(uu) *Tariff year*. The period from the day in a calendar year on which a carrier's annual access tariff filing is scheduled to become effective through the preceding day of the subsequent calendar year.

(vv) *Text change*. A change in the text of a tariff which does not result in a change in any rate or regulation.

(ww) *United States*. The several States and Territories, the District of Columbia, and the possessions of the United States.

(xx) *Corridor service*. ''Corridor service'' refers to interLATA services offered in the ''limited corridors'' established by the District Court in United States v. Western Electric Co., Inc., 569 F. Supp. 1057, 1107 (D.D.C. 1983).

(yy) *Toll dialing parity*. ''Toll dialing parity'' exists when there is dialing parity, as defined in § 51.5 of this chapter, for toll services.

(zz) *Loop-based services*. Loop-based services are services that employ Subcategory 1.3 facilities, as defined in § 36.154 of this chapter.

(aaa) *Zone Average Revenue per Line*. The amount calculated as follows:

Zone Average Revenue per Line = (25% * (Loop + Port)) + U (Uniform revenue per line adjustment)

Where:

Loop = the price for unbundled loops in a UNE zone.

Port = the price for switch ports in that UNE zone.

U = [(Average Price Cap CMT Revenue per Line month in a study area * price cap local exchange carrier Base Period Lines) − (25% * Σ (price cap local exchange carrier Base Period Lines in a UNE Zone * ((Loop + Port) for all zones)))] ÷ price cap local exchange carrier Base Period Lines in a study area.

(bbb) *Access stimulation*.(1) A rate-of-return local exchange carrier or a Competitive Local Exchange Carrier engages in access stimulation when it satisfies the following two conditions:

(i) Has an access revenue sharing agreement, whether express, implied, written or oral, that, over the course of the agreement, would directly or indirectly result in a net payment to the other party (including affiliates) to the agreement, in which payment by the rate-of-return local exchange carrier or Competitive Local Exchange Carrier is based on the billing or collection of access charges from interexchange carriers or wireless carriers. When determining whether there is a net payment under this rule, all payments, discounts, credits, services, features, functions, and other items of value, regardless of form, provided by the rate-of-return local exchange carrier or Competitive Local Exchange Carrier to the other party to the agreement shall be taken into account; and

(ii) Has either an interstate terminating-to-originating traffic ratio of at

least 3:1 in a calendar month, or has had more than a 100 percent growth in interstate originating and/or terminating switched access minutes of use in a month compared to the same month in the preceding year.

(2) The local exchange carrier will continue to be engaging in access stimulation until it terminates all revenue sharing arrangements covered in paragraph (a)(1)(i) of this section. A local exchange carrier engaging in access stimulation is subject to revised interstate switched access charge rules under §61.38 and §69.3(e)(12) of this chapter.

[54 FR 19840, May 8, 1989]

EDITORIAL NOTE: For FEDERAL REGISTER citations affecting §61.3, see the List of CFR Sections Affected, which appears in the Finding Aids section of the printed volume and at *www.fdsys.gov*.

§§61.11–61.12 [Reserved]

Subpart B—Rules for Electronic Filing

SOURCE: 63 FR 35540, June 30, 1998, unless otherwise noted.

§61.13 Scope.

(a) This applies to all tariff publications of issuing carriers required to file tariff publications electronically, and any tariff publication that a carrier chooses to file electronically.

(b) All issuing carriers that file tariffs are required to file tariff publications electronically.

(c) All tariff publications shall be filed in a manner that is compatible and consistent with the technical requirements of the Electronic Tariff Filing System.

[63 FR 35540, June 30, 1998, as amended at 76 FR 43210, July 20, 2011]

§61.14 Method of filing publications.

(a) Publications filed electronically must be addressed to ''Secretary, Federal Communications Commission, Washington, DC 20554.'' The Electronic Tariff Filing System will accept filings 24 hours a day, seven days a week. The official filing date of a publication received by the Electronic Tariff Filing System will be determined by the date and time the transmission ends. If the transmission ends after the close of a business day, as that term is defined in §1.4(e)(2) of this Chapter, the filing will be date and time stamped as of the opening of the next business day.

(b) In addition, except for issuing carriers filing tariffing fees electronically, for all tariff publications requiring fees as set forth in part 1, subpart G of this chapter, issuing carriers must submit the original of the cover letter (without attachments), FCC Form 159, and the appropriate fee to the address set forth in §1.1105 of this chapter.

(c) Carriers that are required to file publications electronically may not file those publications on paper or other media unless specifically required to do so by the Commission.

(d) Carriers that are required to file publications electronically need only transmit one set of files to the Commission. No other copies to any other party are required.

(e) Carriers that are required to file publications electronically must comply with the format requirements set forth in §§61.52 and 61.54, with the exception of the informational tariffs filed pursuant to 47 U.S.C. 226(h)(1)(A).

[63 FR 35540, June 30, 1998, as amended at 64 FR 46586, Aug. 26, 1999; 73 FR 9030, Feb. 19, 2008; 76 FR 43210, July 20, 2011]

§61.15 Letters of transmittal and cover letters.

(a) All tariff publications filed with the Commission electronically must be accompanied by a letter of transmittal. All letters of transmittal filed with the Commission must be numbered consecutively by the issuing carrier beginning with Number 1. All letters of transmittal must also:

(1) Concisely explain the nature and purpose of the filing;

(2) Specify whether supporting information is required for the new tariff or tariff revision, and specify the Commission rule or rules governing the supporting information requirements for that filing;

(3) Contain a statement indicating the date and method of filing of the original of the transmittal as required by §61.14(b);

(4) Include the FCC Registration Number (FRN) of the carrier(s) on

whose behalf the cover letter is submitted. See subpart W of part 1 of this title.

(b) Local exchange carriers filing tariffs electronically pursuant to the notice requirements of section 204(a)(3) of the Communications Act shall display prominently, in the upper right hand corner of the letter of transmittal, a statement that the filing is made pursuant to that section and whether the tariff is filed on 7 or 15 days notice.

(c) Any carrier filing a new or revised tariff made on 15 days' notice or less shall include in the letter of transmittal the name, room number, street address, telephone number, and facsimile number of the individual designated by the filing carrier to receive personal or facsimile service of petitions against the filing as required under § 1.773(a)(4) of this chapter.

(d) International carriers must certify that they are authorized under Section 214 of the Communications Act of 1934, as amended, to provide service, and reference the FCC file number of that authorization.

(e) In addition to the requirements set forth in paragraph (a) of this section, any incumbent local exchange carrier choosing to file an Access Tariff under § 61.39 must include in the transmittal:

(1) A summary of the filing's basic rates, terms and conditions;

(2) A statement concerning whether any prior Commission facility authorization necessary to the implementation of the tariff has been obtained; and

(3) A statement that the filing is made pursuant to § 61.39.

(f) In addition to the requirements set forth in paragraph (a) of this section, any price cap local exchange carrier filing a price cap tariff must include in the letter of transmittal a statement that the filing is made pursuant to § 61.49.

(g) The letter of transmittal must specifically reference by number any special permission necessary to implement the tariff publication. Special permission must be granted prior to the filing of the tariff publication and may not be requested in the transmittal letter.

(h)(1) The letter of transmittal must be substantially in the following format:

_____
(Exact name of carrier in full)

_____
(Post Office Address)

_____
(Date)

_____
Transmittal No.

Secretary, Federal Communications Commission; Washington, DC 20554

Attention: Wireline Competition Bureau

The accompanying tariff (or other publication) issued by _____, and bearing FCC No. _____, effective _____, 20__, is sent to you for filing in compliance with the requirements of the Communications Act of 1934, as amended. (Here give the additional information required.)

_____
(Name of issuing officer or agent)

_____

_____
(Title)

(2) A separate letter of transmittal may accompany each publication, or the above format may be modified to provide for filing as many publications as desired with one transmittal letter.

(i) All submissions of documents other than a new tariff or revisions to an existing tariff, such as Base Documents or Tariff Review Plans, must be accompanied by a cover letter that concisely explains the nature and purpose of the filing. Publications submitted under this paragraph are not required to submit a tariffing fee.

[76 FR 43210, July 20, 2011]

§ 61.16 Base documents.

(a) The Base Document is a complete tariff which incorporates all effective revisions, as of the last day of the preceding month. The Base Document should be submitted with a cover letter as specified in § 61.15(i) and identified as the *Monthly Updated Base Document*.

(b) If there have been revisions that became effective up to and including the last day of the preceding month, a new Base Document must be submitted within the first five business days of the current month that will incorporate those revisions.

[76 FR 43211, July 20, 2011]

§61.17 Applications for special permission.

(a) All issuing carriers that file applications for special permission, associated documents, such as transmittal letters, requests for special permission, and supporting information, shall file those documents electronically.

(b) Applications for special permission must contain:

(1) A detailed description of the tariff publication proposed to be put into effect;

(2) A statement citing the specific rules and the grounds on which waiver is sought;

(3) A showing of good cause; and

(4) The appropriate Illustrative tariff pages the issuing carrier wishes to either revise or add as new pages to its tariff.

(c) An application for special permission must be addressed to ''Secretary, Federal Communications Commission, Washington, DC 20554.'' The Electronic Tariff Filing System will accept filings 24 hours a day, seven days a week. The official filing date of a publication received by the Electronic Tariff Filing System will be determined by the date and time the transmission ends. If the transmission ends after the close of a business day, as that term is defined in §1.4(e)(2) of this chapter, the filing will be date and time stamped as of the opening of the next business day.

(d) In addition, except for issuing carriers filing tariffing fees electronically, for special permission applications requiring fees as set forth in part 1, subpart G of this chapter, issuing carriers must submit the original of the application letter (without attachments), FCC Form 159, and the appropriate fee to the address set forth in §1.1105 of this chapter.

(e) In addition, if an issuing carrier applies for special permission to revise joint tariffs, the application must state that it is filed on behalf of all carriers participating in the affected service. Applications must be numbered consecutively in a series separate from FCC tariff numbers and Letters of Transmittal, bear the signature of the officer or agent of the carrier, and be in the following format:

Application No. _____

(Date) _____

Secretary, Federal Communications Commission, Washington, DC 20554.

Attention: Wireline Competition Bureau (here provide the statements required by section 61.17(b)).

(Exact name of carrier) _____

(Name of officer or agent) _____

(Title of officer or agent) _____

(f) If approved, the issuing carrier must comply with all terms and use all authority specified in the grant. If a carrier elects to use less than the authority granted, it must apply to the Commission for modification of the original grant. If a carrier elects not to use the authority granted within sixty days of its effective date, the original grant will be automatically cancelled by the Commission.

[76 FR 43211, July 20, 2011]

Subpart C—General Rules for Nondominant Carriers

§61.18 Scope.

The rules in this subpart apply to all nondominant carriers.

[64 FR 46587, Aug. 26, 1999]

§61.19 Detariffing of international and interstate, domestic interexchange services.

(a) Except as otherwise provided in paragraphs (b) through (e) of this section, or by Commission order, carriers that are nondominant in the provision of international and interstate, domestic interexchange services shall not file tariffs for such services.

(b) Carriers that are nondominant in the provision of international and domestic, interstate, interexchange services are permitted to file tariffs for dial-around 1+ services. For the purposes of this paragraph, dial-around 1+ calls are those calls made by accessing the interexchange carrier through the use of that carrier's carrier access code.

(c) Carriers that are nondominant in the provision of international and domestic, interstate, interexchange services are permitted to file a tariff for such services applicable to those customers who contact the local exchange carrier to designate an interexchange

carrier or to initiate a change with respect to their primary interexchange carrier. Such tariff will enable the interexchange carrier to provide service to the customer until the interexchange carrier and the customer consummate a written agreement, but in no event shall the interexchange carrier provide service to its customer pursuant to such tariff for more than 45 days.

(d) Carriers that are nondominant in the provision of international inbound collect calls to the United States are permitted to file a tariff for such services.

(e) Carriers that are nondominant in the provision of ''on-demand'' Mobile Satellite Services are permitted to file a tariff for such services applicable to those customers that have not entered into pre-existing service contracts designating a specific provider for such services.

[66 FR 16881, Mar. 28, 2001]

§ 61.20 Method of filing publications.

(a) All issuing carriers that file tariffs shall file all tariff publications and associated documents, such as transmittal letters, requests for special permission, and supporting information, electronically in accordance with the requirements set forth in §§ 61.13 through 61.17.

(b) In addition, except for issuing carriers filing tariffing fees electronically, for all tariff publications requiring fees as set forth in part 1, subpart G of this chapter, issuing carriers must submit the original of the cover letter (without attachments), FCC Form 159, and the appropriate fee to the address set forth in § 1.1105 of this chapter.

[76 FR 43211, July 20,2011]

§ 61.25 References to other instruments.

In addition to the cross-references permitted pursuant to § 61.74, a nondominant carrier may cross-reference in its tariff publication only the rate provisions of another carrier's FCC tariff publication, provided that the following conditions are met:

(a) The tariff being cross-referenced must be on file with the Commission and in effect;

(b) The issuing carrier must specifically identify in its tariff the cross-referenced tariff by Carrier Name and FCC Tariff Number;

(c) The issuing carrier must specifically identify in its tariff the rates being cross-referenced so as to leave no doubt as to the exact rates that will apply, including but not limited to any applicable credits, discounts, promotions; and

(d) The issuing carrier must keep its cross-references current.

[64 FR 46588, Aug. 26, 1999]

§ 61.26 Tariffing of competitive interstate switched exchange access services.

(a) *Definitions.* For purposes of this section, the following definitions shall apply:

(1) *CLEC* shall mean a local exchange carrier that provides some or all of the interstate exchange access services used to send traffic to or from an end user and does not fall within the definition of ''incumbent local exchange carrier'' in 47 U.S.C. 251(h).

(2) *Competing ILEC* shall mean the incumbent local exchange carrier, as defined in 47 U.S.C. 251(h), that would provide interstate exchange access services, in whole or in part, to the extent those services were not provided by the CLEC.

(3) *Switched exchange access services* shall include:

(i) The functional equivalent of the ILEC interstate exchange access services typically associated with the following rate elements: Carrier common line (originating); carrier common line (terminating); local end office switching; interconnection charge; information surcharge; tandem switched transport termination (fixed); tandem switched transport facility (per mile); tandem switching;

(ii) The termination of interexchange telecommunications traffic to any end user, either directly or via contractual or other arrangements with an affiliated or unaffiliated provider of interconnected VoIP service, as defined in 47 U.S.C. 153(25), or a non-interconnected VoIP service, as defined in 47 U.S.C. 153(36), that does not itself seek to collect reciprocal compensation charges

prescribed by this subpart for that traffic, regardless of the specific functions provided or facilities used.

(4) *Non-rural ILEC* shall mean an incumbent local exchange carrier that is not a *rural telephone company* under 47 U.S.C. 153(44).

(5) The *rate* for interstate switched exchange access services shall mean the composite, per-minute rate for these services, including all applicable fixed and traffic-sensitive charges.

(6) *Rural CLEC* shall mean a CLEC that does not serve (*i.e.*, terminate traffic to or originate traffic from) any end users located within either:

(i) Any incorporated place of 50,000 inhabitants or more, based on the most recently available population statistics of the Census Bureau or

(ii) An urbanized area, as defined by the Census Bureau.

(b) Except as provided in paragraphs (c), (e), and (g) of this section, a CLEC shall not file a tariff for its interstate switched exchange access services that prices those services above the higher of:

(1) The rate charged for such services by the competing ILEC or

(2) The lower of:

(i) The benchmark rate described in paragraph (c) of this section or

(ii) In the case of interstate switched exchange access service, the lowest rate that the CLEC has tariffed for its interstate exchange access services, within the six months preceding June 20, 2001.

(c) The benchmark rate for a CLEC's switched exchange access services will be the rate charged for similar services by the competing ILEC. If an ILEC to which a CLEC benchmarks its rates, pursuant to this section, lowers the rate to which a CLEC benchmarks, the CLEC must revise its rates to the lower level within 15 days of the effective date of the lowered ILEC rate.

(d) Except as provided in paragraph (g) of this section, and notwithstanding paragraphs (b) and (c) of this section, in the event that, after June 20, 2001, a CLEC begins serving end users in a metropolitan statistical area (MSA) where it has not previously served end users, the CLEC shall not file a tariff for its exchange access services in that MSA that prices those services above the rate charged for such services by the competing ILEC.

(e) Rural exemption. Except as provided in paragraph (g) of this section, and notwithstanding paragraphs (b) through (d) of this section, a rural CLEC competing with a non-rural ILEC shall not file a tariff for its interstate exchange access services that prices those services above the rate prescribed in the NECA access tariff, assuming the highest rate band for local switching. In addition to that NECA rate, the rural CLEC may assess a presubscribed interexchange carrier charge if, and only to the extent that, the competing ILEC assesses this charge. Beginning July 1, 2013, all CLEC reciprocal compensation rates for intrastate switched exchange access services subject to this subpart also shall be no higher than that NECA rate.

(f) If a CLEC provides some portion of the switched exchange access services used to send traffic to or from an end user not served by that CLEC, the rate for the access services provided may not exceed the rate charged by the competing ILEC for the same access services, except if the CLEC is listed in the database of the Number Portability Administration Center as providing the calling party or dialed number, the CLEC may, to the extent permitted by §51.913(b) of this chapter, assess a rate equal to the rate that would be charged by the competing ILEC for all exchange access services required to deliver interstate traffic to the called number.

(g) Notwithstanding paragraphs (b) through (e) of this section:

(1) A CLEC engaging in access stimulation, as that term is defined in §61.3(bbb), shall not file a tariff for its interstate exchange access services that prices those services above the rate prescribed in the access tariff of the price cap LEC with the lowest switched access rates in the state.

(2) A CLEC engaging in access stimulation, as that term is defined in §61.3(bbb), shall file revised interstate switched access tariffs within forty-five (45) days of commencing access stimulation, as that term is defined in §61.3(bbb), or within forty-five (45) days

of [date] if the CLEC on that date is engaged in access stimulation, as that term is defined in § 61.3(bbb).

[76 FR 73881, Nov. 29, 2011, as amended at 77 FR 20553, Apr. 5, 2012]

Subpart D—General Tariff Rules for International Dominant Carriers

§ 61.28 International dominant carrier tariff filing requirements.

(a) Any carrier classified as dominant for the provision of particular international communications services on a particular route for any reason other than a foreign carrier affiliation under § 63.10 of this chapter shall file tariffs for those services pursuant to the notice and cost support requirements for tariff filings of dominant domestic carriers, as set forth in subpart E of this part.

(b) Other than the notice and cost support requirements set forth in paragraph (a) of this section, all tariff filing requirements applicable to all carriers classified as dominant for the provision of particular international communications services on a particular route for any reason other than a foreign carrier affiliation pursuant to § 63.10 of this chapter are set forth in subpart C of this part.

[66 FR 16881, Mar. 28, 2001]

Subpart E—General Rules for Dominant Carriers

§ 61.31 Scope.

The rules in this subpart apply to all dominant carriers.

[64 FR 46588, Aug. 26, 1999]

§ 61.38 Supporting information to be submitted with letters of transmittal.

(a) *Scope*. This section applies to dominant carriers whose gross annual revenues exceed $500,000 for the most recent 12 month period of operations or are estimated to exceed $500,000 for a representative 12 month period. Incumbent Local Exchange Carriers serving 50,000 or fewer access lines in a given study area that are described as subset 3 carriers in § 69.602 of this chapter may submit Access Tariff filings for that study area pursuant to either this section or § 61.39. However, the Commission may require any issuing carrier to submit such information as may be necessary for a review of a tariff filing. This section (other than the preceding sentence of this paragraph) shall not apply to tariff filings proposing rates for services identified in § 61.42 (d), (e), and (g).

(b) *Explanation and data supporting either changes or new tariff offerings*. The material to be submitted for a tariff change which affects rates or charges or for a tariff offering a new service, must include an explanation of the changed or new matter, the reasons for the filing, the basis of ratemaking employed, and economic information to support the changed or new matter.

(1) For a tariff change the issuing carrier must submit the following, including complete explanations of the bases for the estimates.

(i) A cost of service study for all elements for the most recent 12 month period;

(ii) A study containing a projection of costs for a representative 12 month period;

(iii) Estimates of the effect of the changed matter on the traffic and revenues from the service to which the changed matter applies, the issuing carrier's other service classifications, and the carrier's overall traffic and revenues. These estimates must include the projected effects on the traffic and revenues for the same representative 12 month period used in (b)(1)(ii) above.

(2) For a tariff filing offering a new service, the issuing carrier must submit the following, including complete explanations of the bases for the estimates.

(i) A study containing a projection of costs for a representative 12 month period; and

(ii) Estimates of the effect of the new matter on the traffic and revenues from the service to which the new matter applies, the issuing carrier's other service classifications, and the issuing carrier's overall traffic and revenues. These estimates must include the projected effects on the traffic and revenues for the same representative 12

month period used in paragraph (b)(2)(i) of this section.

(3) [Reserved]

(4) For a tariff that introduces a system of density pricing zones, as described in §69.123 of this chapter, the issuing carrier must, before filing its tariff, submit a density pricing zone plan including, *inter alia*, documentation sufficient to establish that the system of zones reasonably reflects cost-related characteristics, such as the density of total interstate traffic in central offices located in the respective zones, and receive approval of its proposed plan.

(c) *Working papers and statistical data.* (1) Concurrently with the filing of any tariff change or tariff filing for a service not previously offered, the issuing carrier must file the working papers containing the information underlying the data supplied in response to paragraph (b) of this section, and a clear explanation of how the working papers relate to that information.

(2) All statistical studies must be submitted and supported in the form prescribed in §1.363 of this chapter.

(d) *Form and content of additional material to be submitted with certain rate increases.* In the circumstances set out in paragraphs (d)(1) and (2) of this section, the issuing carrier must submit all additional cost, marketing and other data underlying the working papers to justify a proposed rate increase. The issuing carrier must submit this information in suitable form to serve as the carrier's direct case in the event the rate increase is set by the Commission for investigation.

(1) Rate increases affecting single services or tariffed items.

(i) A rate increase in any service or tariffed item which results in more than $1 million in additional annual revenues, calculated on the basis of existing quantities in service, without regard to the percentage increase in such revenues; or

(ii) A single rate increase in any service or tariffed item, or successive rate increases in the same service or tariffed item within a 12 month period, either of which results in:

(A) At least a 10 percent increase in annual revenues from that service or tariffed item, and

(B) At least $100,000 in additional annual revenues, both calculated on the basis of existing quantities in service.

(2) Rate increases affecting more than one service or tariffed item.

(i) A general rate increase in more than one service or tariffed item occurring at one time, which results in more than $1 million in additional revenues calculated on the basis of existing quantities in service, without regard to the percentage increase in such revenues; or

(ii) A general rate increase in more than one service or tariffed item occurring at one time, or successive general rate increases in the same services or tariffed items occurring within a 12 month period, either of which results in:

(A) At least a 10 percent increase in annual revenues from those services or tariffed items, and

(B) At least $100,000 in additional annual revenues, both calculated on the basis of existing quantities in service.

(e) *Submission of explanation and data by connecting carriers.* If the changed or new matter is being filed by the issuing carrier at the request of a connecting carrier, the connecting carrier must provide the data required by paragraphs (b) and (c) of this section on the date the issuing carrier files the tariff matter with the Commission.

(f) *Copies of explanation and data to customers.* Concurrently with the filing of any rate for special construction (or special assembly equipment and arrangements) developed on the basis of estimated costs, the issuing carrier must transmit to the customer a copy of the explanation and data required by paragraphs (b) and (c) of this section.

(g) On each page of cost support material submitted pursuant to this section, the issuing carrier shall indicate the transmittal number under which that page was submitted.

[76 FR 43211, July 20, 2011]

§ 61.39 Optional supporting information to be submitted with letters of transmittal for Access Tariff filings by incumbent local exchange carriers serving 50,000 or fewer access lines in a given study area that are described as subset 3 carriers in § 69.602.

(a) *Scope*. Except as provided in paragraph (g) of this section, This section provides for an optional method of filing for any local exchange carrier that is described as a subset 3 carrier in § 69.602 of this chapter, which elects to issue its own Access Tariff for a period commencing on or after April 1, 1989, and which serves 50,000 or fewer access lines in a study area as determined under § 36.611(a)(8) of this chapter. However, the Commission may require any carrier to submit such information as may be necessary for review of a tariff filing. This section (other than the preceding sentence of this paragraph) shall not apply to tariff filings of local exchange carriers subject to price cap regulation.

(b) *Explanation and data supporting tariff changes*. The material to be submitted to either a tariff change or a new tariff which affects rates or charges must include an explanation of the filing in the transmittal as required by § 61.15. The basis for ratemaking must comply with the following requirements. Except as provided in paragraph (b)(5) of this section, it is not necessary to submit this supporting data at the time of filing. However, the incumbent local exchange carrier should be prepared to submit the data promptly upon reasonable request by the Commission or interested parties.

(1) For a tariff change, the incumbent local exchange carrier that is a cost schedule carrier must propose Traffic Sensitive rates based on the following:

(i) For the first period, a cost of service study for Traffic Sensitive elements for the most recent 12-month period with related demand for the same period.

(ii) For subsequent filings, a cost of service study for Traffic Sensitive elements for the total period since the incumbent local exchange carrier's last annual filing, with related demand for the same period.

(2) For a tariff change, the incumbent local exchange carrier that is an average schedule carrier must propose Traffic Sensitive rates based on the following:

(i) For the first period, the incumbent local exchange carrier's most recent annual Traffic Sensitive settlement from the National Exchange Carrier Association pool.

(ii) For subsequent filings, an amount calculated to reflect the Traffic Sensitive average schedule pool settlement the carrier would have received if the carrier had continued to participate, based upon the most recent average schedule formulas approved by the Commission.

(3) For a tariff change, the incumbent local exchange carrier that is a cost schedule carrier must propose Common Line rates based on the following:

(i) For the first biennial filing, the common line revenue requirement shall be determined by a cost of service study for the most recent 12-month period. Subscriber line charges shall be based on cost and demand data for the same period. Carrier common line rates shall be determined by the following formula:

$$\frac{CCL\ \text{Rev Req}}{\text{CCL MOU}_b * (1+h/2)^2}$$

Where:

$$h = \frac{CCL\ \mathrm{MOU}_1}{\mathrm{CCL\ MOU}_0} - 1$$

And where:

CCL Rev Req = carrier common line revenue requirement for the most recent 12-month period;

CCL MOU_b = carrier common line minutes of use for the most recent 12-month period;

CCL MOU_1 = CCL MOU_b; and

CCL MOU_0 = carrier common line minutes of use for the 12-month period preceding the most recent 12-month period.

(ii) For subsequent biennial filings, the common line revenue requirement shall be determined by a cost of service study for the most recent 24-month period. Subscriber line charges shall be based on cost and demand data for the same period. Carrier common line rates shall be determined by the following formula:

$$\frac{CCL\ \mathrm{Rev\ Req}}{\mathrm{CCL\ MOU}_b * (1+h/2)^{5/2}}$$

Where:

$$h = \frac{CCL\ \mathrm{MOU}_1}{\mathrm{CCL\ MOU}_0} - 1$$

And where:

CCL Rev Req = carrier common line revenue requirement for the most recent 24-month period;

CCL MOU_b = carrier common line minutes of use for the most recent 24-month period;

CCL MOU_1 = carrier common line minutes of use for the 12-month period; and

CCL MOU_0 = carrier common line minutes of use for the 12-month period preceding the most recent 12-month period.

(4) For a tariff change, the incumbent local exchange carrier which is an average schedule carrier must propose common line rates based on the following:

(i) For the first biennial filings, the common line revenue requirement shall be determined by the incumbent local exchange carrier's most recent annual Common Line settlement from the National Exchange Carrier Association. Subscriber line charges shall be based on cost and demand data for the same period. Carrier common line rates shall be determined by the following formula:

$$\frac{CCL\ \mathrm{Rev\ Req}}{\mathrm{CCL\ MOU}_b * (1+h/2)^{2}}$$

Where:

$$h = \frac{CCL\ \mathrm{MOU}_1}{\mathrm{CCL\ MOU}_0} - 1$$

And where:

CCL Rev Req = carrier common line settlement for the most recent 12-month period;

CCL MOU_b = carrier common line minutes of use for the most recent 12-month period;

CCL MOU_1 = CCL MOU_b; and

CCL MOU_0 = carrier common line minutes of use for the 12-month period preceding the most recent 12-month period.

(ii) For subsequent biennial filings, the common line revenue requirement shall be an amount calculated to reflect the average schedule pool settlements the carrier would have received if the carrier had continued to participate in the carrier common line pool, based upon the average schedule Common Line formulas developed by the National Exchange Carrier Association for the most recent 24-month period. Subscriber line charges shall be based on cost and demand data for the same period. Carrier common line rates shall be determined by the following formula:

$$\frac{CCL\ \mathrm{Rev\ Req}}{\mathrm{CCL\ MOU}_b * (1+h/2)^{5/2}}$$

Where:

$$h = \frac{CCL\ \mathrm{MOU}_1}{\mathrm{CCL\ MOU}_0} - 1$$

And where:

CCL Rev Req = carrier common line settlement for the most recent 24-month period;

CCL MOU_b = carrier common line minutes of use for the most recent 24-month period;

CCL MOU_1 = carrier common line minutes of use for the most recent 12-month period; and

CCL MOU_0 = carrier common line minutes of use for the 12-month period preceding the most recent 12-month period.

(5) For End User Common Line charges included in a tariff pursuant to this Section, the incumbent local exchange carrier must provide supporting information for the two-year historical period with its letter of transmittal in accordance with § 61.38.

(c) *Maximum allowable rate of return.* Incumbent Local exchange carriers filing tariffs under this section are not required to comply with §§ 65.700 through 65.701 of this chapter, except with respect to periods during which tariffs were not subject to this section. The Commission may require any carrier to submit such information if it deems it necessary to monitor the carrier's earnings. However, rates must be calculated based on the incumbent local exchange carrier's prescribed rate of return applicable to the period during which the rates are effective.

(d) Rates for a new service that is the same as that offered by a price cap local exchange carrier providing service in an adjacent serving area are deemed presumptively lawful, if the proposed rates, in the aggregate, are no greater than the rates established by the price cap local exchange carrier. Tariff filings made pursuant to this paragraph must include the following:

(1) A brief explanation of why the service is like an existing service offered by a geographically adjacent price cap local exchange carrier; and

(2) Data to establish compliance with this paragraph that, in aggregate, the proposed rates for the new service are no greater than those in effect for the same or comparable service offered by that same geographically adjacent price cap regulated local exchange carrier. Compliance may be shown through submission of applicable tariff pages of the adjacent carrier; a showing that the serving areas are adjacent; any necessary explanations and work sheets.

(e) Average schedule companies filing pursuant to this section shall retain their status as average schedule companies.

(f) On each page of cost support material submitted pursuant to this section, the issuing carrier shall indicate the transmittal number under which that page was submitted.

(g) A local exchange carrier otherwise eligible to file a tariff pursuant to this section may not do so if it is engaging in access stimulation, as that term is defined in §61.3(bbb) of this part, and has not terminated its access revenue sharing agreement(s). A carrier so engaged must file interstate access tariffs in accordance with §61.38, and §69.3(e)(12)(1) of this chapter.

[76 FR 43212, July 20, 2011, as amended at 76 FR 73882, Nov. 29, 2011]

§61.40 Private line rate structure guidelines.

(a) The Commission uses a variety of tools to determine whether a dominant carrier's private line tariffs are just, reasonable, and nondiscriminatory. The dominant carrier's burden of cost justification can be reduced when its private line rate structures comply with the following five guidelines.

(1) Rate structures for the same or comparable services should be integrated;

(2) Rate structures for the same or comparable services should be consistent with one another;

(3) Rate elements should be selected to reflect market demand, pricing convenience for the carrier and customers, and cost characteristics; a rate element which appears separately in one rate structure should appear separately in all other rate structures;

(4) Rate elements should be consistently defined with respect to underlying service functions and should be consistently employed through all rate structures; and

(5) Rate structures should be simple and easy to understand.

(b) The guidelines do not preclude a carrier, in a given case when a private line tariff does not comply with these guidelines, from justifying its departure from the guidelines and showing that its tariff is just, reasonable, and nondiscriminatory.

[49 FR 40869, Oct. 18, 1984, as amended at 76 FR 43213, July 20, 2011]

§61.41 Price cap requirements generally.

(a) Sections 61.42 through 61.49 shall apply as follows:

(1) [Reserved]

(2) To such price cap local exchange carriers as specified by Commission order, and to all local exchange carriers, other than average schedule companies, that are affiliated with such carriers; and

(3) On an elective basis, to local exchange carriers, other than those specified in paragraph (a)(2) of this section, that are neither participants in any Association tariff, nor affiliated with any such participants, except that affiliation with average schedule companies shall not bar a carrier from electing price cap regulation provided the carrier is otherwise eligible.

(b) If a telephone company, or any one of a group of affiliated telephone companies, files a price cap tariff in one study area, that telephone company and its affiliates, except its average schedule affiliates, must file price cap tariffs in all their study areas.

(c) Except as provided in paragraph (e) of this section, the following rules in this paragraph (c) apply to telephone companies subject to price cap regulation, as that term is defined in §61.3(ee), which are involved in mergers, acquisitions, or similar transactions.

(1) Any telephone company subject to price cap regulation that is a party to

a merger, acquisition, or similar transaction shall continue to be subject to price cap regulation notwithstanding such transaction.

(2) Where a telephone company subject to price cap regulation acquires, is acquired by, merges with, or otherwise becomes affiliated with a telephone company that is not subject to price cap regulation, the latter telephone company shall become subject to price cap regulation no later than one year following the effective date of such merger, acquisition, or similar transaction and shall accordingly file price cap tariffs to be effective no later than that date in accordance with the applicable provisions of this part 61.

(3) Notwithstanding the provisions of § 61.41(c)(2), when a telephone company subject to price cap regulation acquires, is acquired by, merges with, or otherwise becomes affiliated with a telephone company that qualifies as an ''average schedule'' company, the latter company may retain its ''average schedule'' status or become subject to price cap regulation in accordance with § 69.3(i)(3) of this chapter and the requirements referenced in that section.

(d) Except as provided in paragraph (e) of this section, local exchange carriers that become subject to price cap regulation as that term is defined in § 61.3(ee) shall not be eligible to withdraw from such regulation.

(e) Notwithstanding the requirements of paragraphs (c) and (d) of this section, a telephone company subject to rate-of-return regulation may return lines acquired from a telephone company subject to price cap regulation to rate-of-return regulation, provided that the acquired lines will not be subject to average schedule settlements, and provided further that the telephone company subject to rate-of-return regulation may not for five years elect price cap regulation for itself, or by any means cause the acquired lines to become subject to price cap regulation.

[55 FR 42382, Oct. 19, 1990; 55 FR 50558, Dec. 7, 1990, as amended at 56 FR 55239, Oct. 25, 1991; 64 FR 46589, Aug. 26, 1999; 65 FR 38695, June 21, 2000; 65 FR 57741, Sept. 26, 2000; 69 FR 25336, May 6, 2004; 76 FR 43213, July 20, 2011]

§ 61.42 Price cap baskets and service categories.

(a)–(c) [Reserved]

(d) Each price cap local exchange carrier shall establish baskets of services as follows:

(1) A basket for the common line, marketing, and certain residual interconnection charge interstate access elements as described in §§ 69.115, 69.152, 69.153, 69.154, 69.155, 69.156, and 69.157 of this chapter. For purposes of §§ 61.41 through 61.49, this basket shall be referred to as the ''CMT basket.''

(2) A basket for traffic sensitive switched interstate access elements. For purposes of §§ 61.41 through 61.49 of this chapter, this basket shall be referred to as the ''traffic-sensitive basket.''

(3) A basket for trunking services as described in §§ 69.110, 69.111, 69.112, 69.125(b), 69.129, and 69.155 of this chapter. For purposes of §§ 61.41 through 61.49, this basket shall be referred to as the ''trunking basket.''

(4)(i) To the extent that a price cap local exchange carrier specified in § 61.41(a)(2) or (a)(3) offers interstate interexchange services that are not classified as access services for the purpose of part 69 of this chapter, such exchange carrier shall establish a fourth basket for such services. For purposes of §§ 61.41 through 61.49, this basket shall be referred to as the ''interexchange basket.''

(ii) If a price cap local exchange carrier has implemented interLATA and intraLATA toll dialing parity everywhere it provides local exchange services at the holding company level, that price cap carrier may file a tariff revision to remove corridor and interstate intraLATA toll services from its interexchange basket.

(5) A basket for special access services as described in § 69.114 of this chapter.

(e)(1) The traffic sensitive switched interstate access basket shall contain such services as the Commission shall permit or require, including the following service categories:

(i) Local switching as described in § 69.106(f) of this chapter;

(ii) Information, as described in § 69.109 of this chapter;

(iii) Data base access services;

(iv) Billing name and address, as described in §69.128 of this chapter;

(v) Local switching trunk ports, as described in §69.106(f)(1) of this chapter; and

(vi) Signalling transfer point port termination, as described in §69.125(c) of this chapter.

(2) The trunking basket shall contain such switched transport as the Commission shall permit or require, including the following service categories and subcategories:

(i) Voice grade entrance facilities, voice grade direct-trunked transport, voice grade dedicated signalling transport,

(ii) High capacity flat-rated transport, including the following service subcategories:

(A) DS1 entrance facilities, DS1 direct-trunked transport, DS1 dedicated signalling transport, and

(B) DS3 entrance facilities, DS3 direct-trunked transport, DS3 dedicated signalling transport.

(iii) Tandem-switched transport, as described in §69.111 of this chapter; and

(iv) Signalling for tandem switching, as described in §69.129 of this chapter.

(3) The special access basket shall contain special access services as the Commission shall permit or require, including the following service categories and subcategories:

(i) Voice grade special access, WATS special access, metallic special access, and telegraph special access services;

(ii) Audio and video services;

(iii) High capacity special access, and DDS services, including the following service subcategories:

(A) DS1 special access services; and

(B) DS3 special access services;

(iv) Wideband data and wideband analog services.

(f) Each price cap local exchange carrier shall exclude from its price cap baskets such services or portions of such services as the Commission has designated or may hereafter designate by order.

(g) New services, other than those within the scope of paragraph (f) of this section, must be included in the affected basket at the first annual price cap tariff filing following completion of the base period in which they are introduced. To the extent that such new services are permitted or required to be included in new or existing service categories within the assigned basket, they shall be so included at the first annual price cap tariff filing following completion of the base period in which they are introduced.

[54 FR 19842, May 8, 1989]

EDITORIAL NOTE: For FEDERAL REGISTER citations affecting §61.42, see the List of CFR Sections Affected, which appears in the Finding Aids section of the printed volume and at *www.fdsys.gov*.

§61.43 Annual price cap filings required.

Price cap local exchange carriers shall submit annual price cap tariff filings that propose rates for the upcoming tariff year, that make appropriate adjustments to their PCI, API, and SBI values pursuant to §§61.45 through 61.47, and that incorporate new services into the PCI, API, or SBI calculations pursuant to §§61.45(g), 61.46(b), and 61.47(b) and (c). Price cap local exchange carriers may propose rate, PCI, or other tariff changes more often than annually, consistent with the requirements of §61.59.

[76 FR 43214, July 20, 2011]

§61.44 [Reserved]

§61.45 Adjustments to the PCI for Local Exchange Carriers.

(a) Price cap local exchange carriers shall file adjustments to the PCI for each basket as part of the annual price cap tariff filing, and shall maintain updated PCIs to reflect the effect of mid-year exogenous cost changes.

(b)(1)(i) Adjustments to price cap local exchange carrier PCIs, in those carriers' annual access tariff filings, the traffic sensitive basket described in §61.42(d)(2), the trunking basket described in §61.42(d)(3), the special access basket described in §61.42(d)(5) and the Interexchange Basket described in §61.42(d)(4)(i), shall be made pursuant to the following formula:

"$PCI_t = PCI_{t-1}[1 + w[GDP\text{-}PI - X] + Z / R]$."

$PCI_{t-1} = PCI_{t-1}[1 + w[GDP\text{-}PI - X] + Z / R]$

Where the terms in the equation are described:

GDP-PI = For annual filings only, the percentage change in the GDP-PI between the quarter ending six months prior to the effective date of the new annual tariff and the corresponding quarter of the previous year. For all other filings, the value is zero.

X = For the CMT, traffic sensitive, and trunking baskets, for annual filings only, the factor is set at the level prescribed in paragraphs (b)(1)(ii) and (iii) of this section. For the interexchange basket, for annual filings only, the factor is set at the level prescribed in paragraph (b)(1)(v) of this section. For the special access basket, for annual filings only, the factor is set at the level prescribed in paragraph (b)(1)(iv) of this section. For all other filings, the value is zero.

g = For annual filings for the CMT basket only, the ratio of minutes of use per access line during the base period, to minutes of use per access line during the previous base period, all minus 1.

Z = The dollar effect of current regulatory changes when compared to the regulations in effect at the time the PCI was updated to PCI_{t-1}, measured at base period level of operations.

Targeted Reduction = the actual possible dollar value of the (GDP-PI − X) reductions that will be targeted to the ATS Charge pursuant to § 61.45(i)(3). The reductions calculated by applying the (GDP-PI − X) portion of the formula to the CCL element within the CMT basket will contain the ''g'' component, as defined above.

R = Base period quantities for each rate element ''I'', multiplied by the price for each rate element ''I'' at the time the PCI was updated to PCI_{t-1}.

w = R + Z, all divided by R (used for the traffic sensitive, trunking, and special access baskets).

w_{ix} = R—(access rate in effect at the time the PCI was updated to PCI_{t-1} * base period demand) + Z, all divided by R.

PCI_t = The new PCI value.

PCI_{t-1} = the immediately preceding PCI value.

(ii) The X value applicable to the baskets specified in §§ 61.42(d)(1), (d)(2), and (d)(3), shall be 6.5%, to the extent necessary to reduce a tariff entity's ATS charge to its Target Rate as set forth in § 61.3(qq). Once any price cap local exchange carrier tariff entity's ATS Charge is equal to the Target Rate as set forth in § 61.3(qq) for the first time (the former NYNEX telephone companies may be treated as a separate tariff entity), then, except as provided in paragraph (b)(1)(iii) of this section, X is equal to GDP-PI and no further reductions will be mandated (*i.e.*, if applying the full X-factor reduction for a given year would reduce the ATS charge below the Target Rate as set forth in § 61.3 (qq), the amount of X-factor reduction applied that year will be the amount necessary to reach the Target Rate as set forth in § 61.3 (qq)). A filing entity does not reach the Target Rate as set forth in § 61.3(qq) in any year in which it exercises an exogenous adjustment pursuant to § 61.45(d)(vii). For companies with separate tariff entities under a single price cap, the following rules shall apply:

(A) Targeting amounts as defined in § 61.45(i)(1)(i) shall be identified separately, using the revenue for each of the tariff entities under the cap.

(B) Each tariff entity shall only be required to use the amount of targeting necessary to get to the Target Rate as set forth in § 61.3 (qq).

(iii)(A) Except as provided in paragraph (b)(1)(iii)(B) of this section, once the Tariff Entity's Target Rate as set forth in § 61.3 (qq) is achieved, the X-factor for the CMT basket will equal GDP-PI as long as GDP-PI is less than or equal to 6.5% and greater than 0%. If GDP-PI is greater than 6.5%, and an entity has eliminated its CCL and multi-line business PICCs charges, the X-factor for the CMT basket will equal 6.5%, and all End User Common Line charges, rates and nominal caps, will be increased by the difference between GDP-PI and the 6.5% X-factor. If GDP-PI is less than 0, the X-factor for the CMT basket will be 0.

(B) For tariff filing entities with a Target Rate of $0.0095, or for the portion of a filing entity consolidated pursuant to § 61.48(o) that, prior to such consolidation, had a Target Rate of $0.0095, in which the ATS charge has achieved the Target Rate but in which the carrier common line (CCL) charge has not been eliminated, the X-factor for the CMT basket will be 6.5% until the earlier of June 30, 2004, or until CCL charges are eliminated pursuant to paragraph (i)(4) of this section. Thereafter, in any filing entity in which a CCL charge remains after July 1, 2004, the X-factor for the CMT basket will be determined pursuant to paragraph (b)(1)(iii)(A) of this section as if CCL charges were eliminated.

(iv) For the special access basket specified in §61.42(d)(5), the value of X shall be 3.0% for the 2000 annual filing. The value of X shall be 6.5% for the 2001, 2002 and 2003 annual filings. Starting in the 2004 annual filing, X shall be equal to GDP-PI for the special access basket.

(v) For the interexchange basket specified in §61.42(d)(4), the value of X shall be 3.0% for all annual filings.

(b)(2) Adjustments to price cap local exchange carrier PCIs and average price cap CMT revenue per line, in tariff filings other than the annual access tariff filing, for the CMT basket described in §61.42(d)(1), the traffic sensitive basket described in §61.42(d)(2), the trunking basket described in §61.42(d)(3), the interexchange basket described in §61.42(d)(4), and the special access basket described in §61.42(d)(5), shall be made pursuant to the formulas set forth in paragraph (b)(1)(i) of this section, except that the ''w(GDP-PI − X)'' component of those PCI formulas shall not be employed.

(c) Effective July 1, 2000, the prices of the CMT basket rate elements, excluding special access surcharges under §69.115 of this chapter and line ports in excess of basic under §69.157 of this chapter, shall be set based upon Average Price Cap CMT Revenue per Line month.

(d) The exogenous cost changes represented by the term ''Z'' in the formula detailed in paragraph (b)(1)(i) of this section shall be limited to those cost changes that the Commission shall permit or require by rule, rule waiver, or declaratory ruling.

(1) Subject to further order of the Commission, those exogenous changes shall include cost changes caused by:

(i) The completion of the amortization of depreciation reserve deficiencies;

(ii) Such changes in the Uniform System of Accounts, including changes in the Uniform System of Accounts requirements made pursuant to §32.16 of this chapter, as the Commission shall permit or require be treated as exogenous by rule, rule waiver, or declaratory ruling;

(iii) Changes in the Separations Manual;

(iv) [Reserved]

(v) The reallocation of investment from regulated to nonregulated activities pursuant to §64.901 of this chapter;

(vi) Such tax law changes and other extraordinary cost changes as the Commission shall permit or require be treated as exogenous by rule, rule waiver, or declaratory ruling;

(vii) Retargeting the PCI to the level specified by the Commission for carriers whose base year earnings are below the level of the lower adjustment mark, subject to the limitation in §69.731 of this chapter. The allocation of LFAM amounts will be allocated pursuant to §61.45(d)(3). This section shall not be applicable to tariff filings during the tariff year beginning July 1, 2000, but is applicable in subsequent years;

(viii) Inside wire amortizations;

(ix) The completion of amortization of equal access expenses.

(2) Price cap local exchange carriers specified in §§61.41(a)(2) or (a)(3) shall, in their annual access tariff filing, recognize all exogenous cost changes attributable to modifications during the coming tariff year in their Subscriber Plant Factor and the Dial Equipment Minutes factor, and completions of inside wire amortizations and reserve deficiency amortizations.

(3) Exogenous cost changes shall be apportioned on a cost-causative basis between price cap services as a group, and excluded services as a group. Total exogenous cost changes thus attributed to price cap services shall be recovered from services other than those used to calculate the ATS charge.

(e) [Reserved]

(f) The exogenous costs caused by new services subject to price cap regulation must be included in the appropriate PCI calculations under paragraphs (b) and (c) of this section beginning at the first annual price cap tariff filing following completion of the base period in which such services are introduced.

(g) In the event that a price cap tariff becomes effective, which tariff results in an API value (calculated pursuant to §61.46) that exceeds the currently applicable PCI value, the PCI value shall be adjusted upward to equal the API value.

(h) [Reserved]

(i)(1)(i) Price cap local exchange carriers that are recovering revenues through rates pursuant to §§ 69.106, 69.108, 69.109, 69.110, 69.111, 69.112, 69.113, 69.118, 69.123, 69.124, 69.125, 69.129, or § 69.155 of this chapter shall target, to the extent necessary to reduce the ATS Charge to the Target Rate as set forth in § 61.3 (qq) for the first time, any PCI reductions associated with the dollar impact of application of the (GDP-PI − X) portion of the formula in § 61.45(b)(1)(i) to the traffic sensitive and trunking baskets. In order to calculate the actual dollars to transfer to the trunking and traffic sensitive baskets, carriers will first determine the ''Targeted Revenue Differential'' that will be transferred to the trunking and traffic sensitive baskets to reduce the ATS Charge to the Target Rate as set forth in § 61.3(qq). The Targeted Revenue Differential shall be applied only to the trunking and traffic sensitive baskets to the extent necessary to reduce the ATS charge to the Target Rate as set forth in § 61.3 (qq), and shall not be applied to reduce the PCIs in any other basket or to reduce Average Price Cap CMT Revenue per Line month, except as provided in § 61.45(i)(4).

(ii) For the purposes of § 61.45(i)(1)(i), Targeted Revenue Differential will be determined by adding together the following amounts:

(A) R * (GDP-PI − X) for the traffic sensitive basket, trunking basket, and the CMT basket excluding CCL revenues; and

(B) CCL Revenues * [(GDP-PI − X − (g / 2)] / [1 + (g / 2)]

Where ''g'' is defined in § 61.45(b)(1)(i).

(2) Until a tariff entity's ATS Charge equals the Target Rate as set forth in § 61.3 (qq) for the first time, the Targeted Revenue Differential will be targeted to reduce the following rates for that tariff filing entity, in order of priority:

(i) To the residual per minute Transport Interconnection Charge, until that rate is $0.00; then

(ii) To the Information Surcharge, until that rate is $0.00; then

(iii) To the other Local Switching charges and Switched Transport charges until the tariff entity's ATS Rate equals the Target Rate as set forth in § 61.3(qq) for the first time. In making these reductions, the reductions to Local Switching rates as a percentage of total X-factor reductions must be greater than or equal to the percentage proportion of Local Switching revenues to the total sum of revenues for Local Switching, Local Switching Trunk Ports, Signalling Transfer Point Port Termination, Switched Direct Trunked Transport, Signalling for Switched Direct Trunked Transport, Entrance Facilities for switched access traffic, Tandem Switched Transport, and Signalling for Tandem Switching (*i.e.*, Local Switching gets at least its proportionate share of reductions).

(3) After a price cap local exchange carrier reaches the Target Rate as set forth in § 61.3(qq), the ATS Rate will be recalculated each subsequent Annual Filing. This process will identify the new ATS Charge for the new base period level. Due to change in base period demand and inclusion of new services for that annual filing, the absolute level of a tariff entity's ATS Charge may change. The resulting new ATS Charge level will be what that tariff entity will be measured against during that base period. For example, if a company whose target is $0.0055 reached the Target Rate during the 2000 annual filing, that level may change to $0.0058 in the 2001 annual filing due to change in demand and inclusion of new services. Therefore, it will be the $0.0058 average rate that the tariff entity will be measured against for all non-annual filings. Likewise, if that same company was at the Target Rate during the 2000 filing, that level may change to $0.0053 average rate in the 2001 annual filing due to change in demand and inclusion of new services. In that case, it will be at the $0.0053 average rate that the tariff entity will be measured.

(4) A company electing a $0.0095 Target Rate will, in the tariff year it reaches the Target Rate, apply any Targeted Revenue Differential remaining after reaching the Target Rate to reduce Average Price Cap CMT Revenue per Line month until the CCL charge is eliminated. In subsequent years, until the earlier of June 30, 2004 or when the CCL charge is eliminated,

tariff filing entities with a Target Rate of $0.0095, or the portion of a filing entity consolidated pursuant to §61.48(o) that, prior to such consolidation, had a Target Rate of $0.0095, will reduce Average Price Cap CMT Revenue per Line month according to the following method:

(i) Filing entity calculates the maximum allowable carrier common line revenue, as defined in §61.46(d)(1), that would be permitted in the absence of further adjustment pursuant to this paragraph;

(ii) Filing entity identifies maximum amount of dollars available to reduce Average Price Cap CMT Revenue per Line month by the following:

(CMT revenue in a $0.0095 Area − CCL revenue in a $0.0095 Area) * (GDP-PI − X) + (CCL Revenue in a $0.0095 Area) * [(GDP-PI − X) − (g / 2)] / [1 + (g / 2)]

(iii) The Average Price Cap CMT Revenue per Line month shall then be reduced by the lesser of the amount described in paragraph (i)(4)(i) of this section and the amount described in paragraph (i)(4)(ii) of this section, divided by base period Switched Access End User Common Line Charge lines.

[65 FR 38696, June 21, 2000; 65 FR 57741, Sept. 26, 2000; 76 FR 43214, July 20, 2011]

§61.46 Adjustments to the API.

(a) Except as provided in paragraphs (d) and (e) of this section, in connection with any price cap tariff filing proposing rate changes, the price cap local exchange carrier must calculate an API for each affected basket pursuant to the following methodology:

$$API_t = API_{t-1}[\Sigma i\ v_i\ (P_t/P_{t-1})i]$$

Where:

API_t = the proposed API value,
API_{t-1} = the existing API value,
P_t = the proposed price for rate element ''i,''
P_{t-1} = the existing price for rate element ''i,'' and
v_i = the current estimated revenue weight for rate element ''i,'' calculated as the ratio of the base period demand for the rate element ''i'' priced at the existing rate, to the base period demand for the entire basket of services priced at existing rates.

(b) New services subject to price cap regulation must be included in the appropriate API calculations under paragraph (a) of this section beginning at the first annual price cap tariff filing following completion of the base period in which they are introduced. This index adjustment requires that the demand for the new service during the base period must be included in determining the weights used in calculating the API.

(c) Any price cap tariff filing proposing rate restructuring shall require an adjustment to the API pursuant to the general methodology described in paragraph (a) of this section. This adjustment requires the conversion of existing rates into rates of equivalent value under the proposed structure, and then the comparison of the existing rates that have been converted to reflect restructuring to the proposed restructured rates. This calculation may require use of carrier data and estimation techniques to assign customers of the preexisting service to those services (including the new restructured service) that will remain or become available after restructuring.

(d) The maximum allowable carrier common line (CCL) revenue shall be computed pursuant to the following methodology:

CCL = CMT − EUCL − Interstate Access Universal Service Support Mechanism Per Line − PICC

Where:

CMT = Price Cap CMT Revenue as defined in §61.3(cc).
EUCL = Maximum allowable EUCL rates established pursuant to §69.152 of this chapter multiplied by base period lines.
Interstate Access Universal Service Support Per Line = the amount as determined by the Administrator pursuant to §54.807 of this chapter times the number of base period lines for each customer class and zone receiving Interstate Access Universal Service support pursuant to part 54, subpart J.
PICC = Maximum allowable PICC rates established pursuant to §69.153 of this chapter multiplied by base period lines.

(e) In no case shall a price cap local exchange carrier include data associated with services offered pursuant to contract tariff in the calculations required by this section.

[65 FR 38698, June 21, 2000; 65 FR 57741, 57742, Sept. 26, 2000; 76 FR 43214, July 20, 2011]

§ 61.47 Adjustments to the SBI; pricing bands.

(a) In connection with any price cap tariff filing proposing changes in the rates of services in service categories, subcategories, or density zones, the carrier must calculate an SBI value for each affected service category, subcategory, or density zone pursuant to the following methodology:

$$SBI_t = SBI_{t-1}[\Sigma_i\ v_i(P_t/P_{t-1})_i]$$

where

SBI_t = the proposed SBI value,
SBI_{t-1} = the existing SBI value,
P_t = the proposed price for rate element ''i,''
P_{t-1} = the existing price for rate element ''i,'' and
v_i = the current estimated revenue weight for rate element ''i,'' calculated as the ratio of the base period demand for the rate element ''i'' priced at the existing rate, to the base period demand for the entire group of rate elements comprising the service category priced at existing rates.

(b) New services that are added to existing service categories or subcategories must be included in the appropriate SBI calculations under paragraph (a) of this section beginning at the first annual price cap tariff filing following completion of the base period in which they are introduced. This index adjustment requires that the demand for the new service during the base period must be included in determining the weights used in calculating the SBI.

(c) In the event that the introduction of a new service requires the creation of a new service category or subcategory, a new SBI must be established for that service category or subcategory beginning at the first annual price cap tariff filing following completion of the base period in which the new service is introduced. The new SBI should be initialized at a value of 100, corresponding to the service category or subcategory rates in effect the last day of the base period, and thereafter should be adjusted as provided in paragraph (a) of this section.

(d) Any price cap tariff filing proposing rate restructuring shall require an adjustment to the affected SBI pursuant to the general methodology described in paragraph (a) of this section. This adjustment requires the conversion of existing rates in the rate element group into rates of equivalent value under the proposed structure, and then the comparison of the existing rates that have been converted to reflect restructuring to the proposed restructured rates. This calculation may require use of carrier data and estimation techniques to assign customers of the preexisting service to those services (including the new restructured service) that will remain or become available after restructuring.

(e) Pricing bands shall be established each tariff year for each service category and subcategory within a basket. Each band shall limit the pricing flexibility of the service category, subcategory, as reflected in the SBI, to an annual increase of a specified percent listed in this paragraph, relative to the percentage change in the PCI for that basket, measured from the levels in effect on the last day of the preceding tariff year. For local exchanage carriers subject to price cap regulation as that term is defined in § 61.3(ee), there shall be no lower pricing band for any service category or subcategory.

(1) Five percent:

(i) Local Switching (traffic sensitive basket)

(ii) Information (traffic sensitive basket)

(iii) Database Access Services (traffic sensitive basket)

(iv) 800 Database Vertical Services subservice (traffic sensitive basket)

(v) Billing Name and Address (traffic sensitive basket)

(vi) Local Switching Trunk Ports (traffic sensitive basket)

(vii) Signalling Transfer Point Port Termination (traffic sensitive basket)

(viii) Voice Grade (trunking and special access baskets)

(ix) Audio/Video (special access basket)

(x) Total High Capacity (trunking and special access baskets)

(xi) DS1 Subservice (trunking and special access baskets)

(xii) DS3 Subservice (trunking and special access baskets)

(xiii) Wideband (special access basket)

(2) Two percent:

(i) Tandem-Switched Transport (trunking basket)

(ii) Signalling for Tandem Switching (trunking basket)

(f) A price cap local exchange carrier may establish density zones pursuant to the requirements set forth in §69.123 of this chapter, for any service in the trunking and special access baskets, other than the interconnection charge set forth in §69.124 of this chapter. The pricing flexibility of each zone shall be limited to an annual increase of 15 percent, relative to the percentage change in the PCI for that basket, measured from the levels in effect on the last day of the preceding tariff year. There shall be no lower pricing band for any density zone.

(g)–(i)(l) [Reserved]

(2) Effective January 1, 1998, notwithstanding the requirements of paragraph (a) of this section, if a price cap local exchange carrier is recovering interconnection charge revenues through per-minute rates pursuant to §69.155 of this chapter, any reductions to the PCI for the basket designated in §61.42(d)(3) resulting from the application of the provisions of §61.45(b)(1)(i) and from the application of the provisions of §§61.45(i)(1) and 61.45(i)(2) shall be directed to the SBI of the service category designated in §61.42(d)(i).

(3) [Reserved]

(4) Effective January 1, 1998, the SBI reduction required by paragraph (i)(2) of this section shall be determined by dividing the sum of the dollar amount of any PCI reduction required by §§61.45(i)(1) and 61.45(i)(2), by the dollar amount associated with the SBI for the service category designated in §61.42(e)(2)(vi), and multiplying the SBI for the service category designated in §61.42(e)(2)(vi) by one minus the resulting ratio.

(5) Effective July 1, 2000, notwithstanding the requirements of paragraph (a) of this section and subject to the limitations of §61.45(i), if a price cap local exchange carrier is recovering an ATS charge greater than its Target Rate as set forth in §61.3(qq), any reductions to the PCI for the traffic sensitive or trunking baskets designated in §§61.42(d)(2) and 61.42(d)(3) resulting from the application of the provisions of §61.45(b), and the formula in §61.45(b) and from the application of the provisions of §§61.45(i)(1), and 61.45(i)(2) shall be directed to the SBIs of the service categories designated in §§61.42(e)(1) and 61.42(e)(2).

(j) [Reserved]

(k) In no case shall a price cap local exchange carrier include data associated with services offered pursuant to contract tariff in the calculations required by this section.

[54 FR 19843, May 8, 1989]

EDITORIAL NOTE: For FEDERAL REGISTER citations affecting §61.47, see the List of CFR Sections Affected, which appears in the Finding Aids section of the printed volume and at *www.fdsys.gov*.

§61.48 Transition rules for price cap formula calculations.

(a)–(h) [Reserved]

(i) *Transport and Special Access Density Pricing Zone Transition Rules*—(1) *Definitions*. The following definitions apply for purposes of paragraph (i) of this section:

Earlier date is the earlier of the special access zone date and the transport zone date.

Earlier service is special access if the special access zone date precedes the transport zone date, and is transport if the transport zone date precedes the special access zone date.

Later date is the later of the special access zone date and the transport zone date.

Later service is transport if the special access zone date precedes the transport zone date, and is special access if the transport zone date precedes the special access zone date.

Revenue weight of a given group of services included in a zone category is the ratio of base period demand for the given service rate elements included in the category priced at existing rates, to the base period demand for the entire group of rate elements comprising the category priced at existing rates.

Special access zone date is the date on which a local exchange carrier tariff establishing divergent special access rates in different zones, as described in §69.123(c) of this chapter, becomes effective.

Transport zone date is the date on which a local exchange carrier tariff

establishing divergent switched transport rates in different zones, as described in § 69.123(d) of this chapter, becomes effective.

(2) *Simultaneous Introduction of Special Access and Transport Zones.* Price cap local exchange carriers that have established density pricing zones pursuant to § 69.123 of this chapter, and whose special access zone date and transport zone date occur on the same date, shall initially establish density pricing zone SBIs and bands pursuant to the methodology in §§ 61.47(e) through (f).

(3) *Sequential Introduction of Zones in the Same Tariff Year.* Notwithstanding §§ 61.47(e) through (f), price cap local exchange carriers that have established density pricing zones pursuant to § 69.123 of this chapter, and whose special access zone date and transport zone date occur on different dates during the same tariff year, shall, on the earlier date, establish density pricing zone SBIs and pricing bands using the methodology described in §§ 61.47(e) through (f), but applicable to the earlier service only. On the later date, such carriers shall recalculate the SBIs and pricing bands to limit the pricing flexibility of the services included in each density pricing zone category, as reflected in its SBI, as follows:

(i) The upper pricing band shall be a weighted average of the following:

(A) The upper pricing band that applied to the earlier services included in the zone category on the day preceding the later date, weighted by the revenue weight of the earlier services included in the zone category; and

(B) 1.05 times the SBI value for the services included in the zone category on the day preceding the later date, weighted by the revenue weight of the later services included in the zone category.

(ii) [Reserved]

(iii) On the later date, the SBI value for the zone category shall be equal to the SBI value for the category on the day preceding the later date.

(4) *Introduction of Zones in Different Tariff Years.* Notwithstanding §§ 61.47(e) through (f), those price cap local exchange carriers that have established density pricing zones pursuant to § 69.123 of this chapter, and whose special access zone date and transport zone date do not occur within the same tariff year, shall, on the earlier date, establish density pricing zone SBIs and pricing bands using the methodology described in §§ 61.47(e) through (f), but applicable to the earlier service only.

(j)–(k) [Reserved]

(l) *Average Traffic Sensitive Revenues.* (1) In the July 1, 2000 annual filing, price cap local exchange carriers will make an additional reduction to rates comprising ATS charge, and to associated SBI upper limits and PCIs. This reduction will be calculated to be the amount that would be necessary to achieve a total $2.1 billion reduction in carrier common line and ATS rates by all price cap local exchange carriers, compared with those rates as they existed on June 30, 2000 using 2000 annual filing base period demand.

(i) The net change in revenue associated with Carrier Common Line Rate elements resulting from:

(A) The removal from access of price cap local exchange carrier contributions to the Federal universal service mechanisms;

(B) Price cap local exchange carrier receipts of interstate access universal service support pursuant to subpart J of part 54;

(C) Changes in End User Common Line Charges and PICC rates;

(D) Changes in Carrier Common Line charges due to GDP-PI − X targeting for $0.0095 filing entities.

(ii) Reductions in Average Traffic Sensitive charges resulting from:

(A) Targeting of the application of the (GDP-PI − X) portion of the formula in § 61.45(b), and any applicable ''g'' adjustments;

(B) The removal from access of price cap local exchange carrier contributions to the Federal universal service mechanisms;

(C) Additional ATS charge reductions defined in paragraph (2) of this section.

(2) Once the reductions in paragraph (l)(1)(i) and paragraphs (l)(1)(ii)(A) and (l)(1)(ii)(B) of this section are identified, the difference between those reductions and $2.1 billion is the total amount of additional reductions that would be made to ATS rates of price cap local exchange carriers. This amount will then be restated as the

percentage of total price cap local exchange carrier Local Switching revenues as of June 30, 2000 using 2000 annual filing base period demand (''June 30 Local Switching revenues'') necessary to yield the total amount of additional reductions and taking into account the fact that, if participating, a price cap local exchange carrier would not reduce ATS rates below its Target Rate as set forth in §61.3(qq).Each price cap local exchange carrier then reduces ATS rate elements, and associated SBI upper limits and PCIs, by a dollar amount equivalent to the percentage times the June 30 Local Switching revenues for that filing entity, provided that no price cap local exchange carrier shall be required to reduce its ATS rates below its Target Rate as set forth in §61.3(qq). Each price cap local exchange carrier can take its additional reductions against any of the ATS rate elements, provided that at least a proportional share must be taken against Local Switching rates.

(m) *Pooled Local Switching Revenues.* (1) Price cap local exchange carriers are permitted to pool local switching revenues in their CMT basket under one of the following conditions.

(i) Any price cap local exchange carrier that would otherwise have July 1, 2000 price cap reductions as a percentage of Base Period Price Cap Revenues at the holding company level greater than the industry wide total July 1, 2000 price cap revenue reduction as a percentage of Base Period Price Cap Revenues may elect temporarily to pool the amount of the additional reductions above 25% of the Local Switching element revenues necessary to yield that carrier's proportionate share of a total $2.1 billion reduction in switched access usage rates on July 1, 2000. The basis of the reduction calculation will be R at PCI_{t-1} for the upcoming tariff year. The percentage reductions per line amounts will be calculated as follows: (Total Price Cap Revenue Reduction ÷ Base Period Price Cap Revenues)

Pooled local switching revenue for each filing entity within a holding company that qualifies under this paragraph (i) will continue until such pooled revenues are eliminated under this paragraph. Notwithstanding the provisions of §61.45(b)(1), once the Average Traffic Sensitive (ATS) rate reaches the applicable Target Rate as set forth in §61.3(qq), the Targeted Revenue Differential as defined in §61.45(i) shall be targeted to reducing pooled local switching revenue until the pooled local switching revenue is eliminated. Thereafter, the X-factor for these baskets will be determined in accordance with §61.45(b)(1).

(ii) Price cap local exchange carriers other than the Bell companies and GTE with at least 20% of total holding company lines operated by companies that as of December 31, 1999 were certified to the Commission as rural carriers, may elect to pool up to the following amounts:

(A) For a price cap holding company's predominantly non-rural filing entities (*i.e.*, filing entities within which more than 50% of all lines are operated by telephone companies other than those that as of December 31, 1999 were certified to the Commission as rural telephone companies), the amount of the additional reductions to Average Traffic Sensitive Charge rates as defined in paragraph (l)(2) of this section, to the extent such reductions exceed 25% of the Local Switching element revenues (measured in terms of June 30, 2000 rates times 1999 base period demand);

(B) For a price cap holding company's predominantly rural filing entities (*i.e.*, filing entities with greater than 50% of lines operated by telephone companies that as of December 31, 1999 were certified to the Commission as rural telephone companies), the amount of the additional reductions to Average Traffic Sensitive Charge rates as defined in paragraph (l)(2) of this section.

(2) Allocation of Pooled Local Switching Revenue to Certain CMT Elements

(i) The pooled local switching revenue for each filing entity is shifted to the CMT basket within price caps. Pooled local switching revenue will not be included in calculations to determine the eligibility for interstate access universal service funding.

(ii) Pooled local switching revenue will be capped on a revenue per line basis.

(iii) Pooled local switching revenue is included in the total revenue for the CMT basket in calculating the X-factor reduction targeted to the traffic sensitive rate elements, and for companies qualified under paragraph (m)(1)(i) of this section, to pooled elements after the Average Traffic Sensitive Charge reaches the target level. For the purpose of targeting X-factor reductions, companies that allocate pooled local switching revenue to other filing entities pursuant to paragraph (m)(2)(vii) of this section shall include pooled local switching revenue in the total revenue of the CMT basket of the filing entity from which the pooled local switching revenue originated.

(iv) Pooled local switching revenue shall be kept separate from CMT revenue in the CMT basket. CMT rate elements for each filing entity shall first be set based on CMT revenue per line without regard to the presence of pooled local switching revenue for each filing entity.

(v) If the rates generated without regard to the presence of pooled local switching revenue for multi-line business PICC and/or multi-line business SLC are below the nominal caps of $4.31 and $9.20, respectively, pooled amounts can be added to these rate elements to the extent permitted by the nominal caps.

(vi) Notwithstanding the provisions of § 69.152(k) of this chapter, pooled local switching revenue is first added to the multi-line business SLC until the rate equals the nominal cap ($9.20) or the pooled local switching revenue is fully allocated. If pooled local switching revenue remains after applying amounts to the multi-line business SLC, notwithstanding the provisions of § 69.153 of this chapter, the remaining pooled local switching revenue may be added to the multi-line business PICC until the rate equals the nominal cap ($4.31) or the pooled local switching revenue is fully allocated. Unallocated pooled local switching revenue may still remain. For companies pooling pursuant to paragraph (m)(1)(i) of this section, these unallocated amounts may not be recovered from the CCL charge, the primary residential and single-line business SLC, a non-primary residential SLC, or from CMT elements in any other filing entity.

(vii) For companies pooling pursuant to paragraph (m)(1)(ii) of this section, pooled local switching revenue that can not be allocated to the multi-line business PICC and multi-line business SLC rates within an individual filing entity may not be recovered from the CCL charge, primary residential and single-line business SLC or residential/single-line business SLC charges, but may be allocated to other filing entities within the holding company, and collected by adding these amounts to the multi-line business PICC and multi-line business SLC rates. The allocation of pooled local switching revenue among filing entities will be recalculated at each annual filing. In subsequent annual filings, pooled local switching revenue that was allocated to another filing entity will be reallocated to the filing entity from where it originated, to the full extent permitted by the nominal caps of $9.20 and $4.31.

(viii) Notwithstanding the provisions of § 69.152(k) of this chapter, these unallocated local switching revenues that cannot be recovered fully pursuant to paragraph (m)(2)(vii) of this section are first added to the multi-line business SLC of other filing entities until the resulting rate equals the nominal cap ($9.20) or the pooled local switching revenue for the holding company is fully allocated. If the pooled local switching revenue can be fully allocated to the multi-line business SLC, the amount is distributed to each filing entity with a rate below the nominal cap ($9.20) based on its below-cap multi-line business SLC revenue as a percentage of the total holding company's below-cap multi-line business SLC revenue.

(ix) If pooled local switching revenue remains after applying amounts to the multi-line business SLC of all filing entities in the holding company, pooled local switching revenue may be added to the multi-line business PICC of other filing entities. Notwithstanding the provisions of § 69.153 of this chapter, the remaining pooled local switching revenue is distributed to each filing entity with a rate below the nominal cap ($4.31) based on its below-cap multi-line business PICC revenue as a

percentage of the total holding company's below-cap multi-line business PICC revenue.

(x) If pooled local switching revenue is added to the multi-line business SLC but not to the multi-line business PICC for a filing entity that qualified to deaverage SLCs without regard to pooled local switching revenue, the resulting SLC rates can still be deaveraged. Total pooled local switching revenue is added to the deaveraged zone 1 multi-line business SLC rate until the per line rate in zone 1 equals the rate in zone 2 or until the pooled local switching revenue is fully allocated to the deaveraged multi-line business SLC rate for zone 1. If pooled local switching revenue remains after the rate in zone 1 equals zone 2, the deaveraged rates of zone 1 and zone 2 are increased until the pooled local switching revenue is fully allocated to the deaveraged multi-line business SLC rates of zone 1 and 2 or until those rates reach the zone 3 multi-line business SLC rate level. This process continues until pooled local switching revenue is fully allocated to the zone deaveraged rates.

(n) Establishment of the special access basket, effective July 1, 2000.

(1) On the effective date, the PCI value for the special access basket, as defined in §61.42(d)(5) shall be equal to the PCI for the trunking basket on the day preceding the establishment of the special access basket.

(2) On the effective date, the API value for the special access basket, as defined in §61.42(d)(5) shall be equal to the API for the trunking basket on the day preceding the establishment of the special access basket.

(3) Service Category, Subcategory, and Density Zone SBIs and Upper Limits.

(i) Interconnection, Tandem Switched Transport, and Signalling Interconnec- tion will retain the SBIs and upper limits and remain in the trunking basket.

(ii) Audio/Video and Wideband will retain the SBIs and upper limits and be moved into the special access basket.

(iii) For Voice Grade, the SBIs and upper limits in both baskets will be equal to the SBIs and upper limits in the existing trunking basket on the day preceding the establishment of the special access basket. Voice Grade density zones in the trunking basket will retain their indices and upper limits. Voice Grade density zones will be initialized in the special access basket when services are first offered in them.

(iv) For High Cap/DDS, DS1, and DS3 category and subcategories, the SBIs and upper limits in both baskets will be equal to the SBIs and upper limits in the existing trunking basket on the day preceding the establishment of the special access basket. SBIs and upper limits for services that are in both combined density zones and either DTT/EF or special access density zones will be calculated by using weighted averages of the indices in the affected zones.

(v) For each DTT/EF-related zone remaining in the trunking basket, the values will be calculated by taking the sum of the products of the DTT/EF revenues times the DTT/EF index (or upper limit) and the DTT/EF-related revenues in the combined zone times the combined index (or upper limit), and dividing by the total DTT/EF-related revenues for that zone.

(vi) For each special access-related zone in the special access basket, the values will be calculated by taking the sum of the products of the special access revenues times the special access index (or upper limit) and the special access-related revenues in the combined zone times the combined index (or upper limit), and dividing by the total special access-related revenues for that zone.

(o) Treatment of acquisitions of exchanges with different ATS Target Rates as set forth in §61.3(qq):

(1) In the event that a price cap local exchange carrier acquires a filing entity or portion thereof from a price cap local exchange carrier after July 1, 2000, and the price cap local exchange carrier did not have a binding and executed contract to purchase that filing entity or portion thereof as of April 1, 2000, those properties retain their preexisting Target Rates as set forth in §61.3(qq). If those properties are merged into a filing entity with a different Target Rate as set forth in §61.3(qq), the Target Rate as set forth in §61.3(qq) for the merged filing entity

will be the weighted average of the Target Rates as set forth in § 61.3(qq) for the properties being combined into a single filing entity, with the average weighted by local switching minutes. When a property acquired as a result of a contract for purchase executed after April 1, 2000 is merged with $0.0095 Target Rate properties, the obligation to apply price cap reductions to reduce CCL, pursuant to § 61.45(b)(iii) does not apply to the properties purchased under contracts executed after April 1, 2000, but continues to apply to the other properties.

(2) For sale of properties for which a holding company was, as of April 1, 2000, under a binding and executed contract to purchase but which close after June 30, 2000, but during tariff year 2000, and that are subject to the $0.0095 Target Rate as set forth in § 61.3(qq), the Average Traffic Sensitive Rate charged by the purchaser for that property will be the greater of $0.0095 or the Average Traffic Sensitive Rate for that property.

[54 FR 19843, May 8, 1989, as amended at 55 FR 42384, Oct. 19, 1990; 56 FR 21617, May 10, 1991; 56 FR 55239, Oct. 25, 1991; 59 FR 10302, Mar. 4, 1994; 60 FR 19528, Apr. 19, 1995; 60 FR 52346, Oct. 6, 1995; 62 FR 31932, June 11, 1997; 64 FR 46590, Aug. 26, 1999; 65 FR 38699, June 21, 2000; 65 FR 57742, 57743, Sept. 26, 2000; 76 FR 43214, July 20, 2011]

§ 61.49 Supporting information to be submitted with letters of transmittal for tariffs of carriers subject to price cap regulation.

(a) Each price cap tariff filing must be accompanied by supporting materials sufficient to calculate required adjustments to each PCI, API, and SBI pursuant to the methodologies provided in §§ 61.45, 61.46, and 61.47, as applicable.

(b) Each price cap tariff filing that proposes rates that are within applicable bands established pursuant to § 61.47, and that results in an API value that is equal to or less than the applicable PCI value, must be accompanied by supporting materials sufficient to establish compliance with the applicable bands, and to calculate the necessary adjustment to the affected APIs and SBIs pursuant to §§ 61.46 and 61.47, respectively.

(c) Each price cap tariff filing that proposes rates above the applicable band limits established in §§ 61.47 (e) must be accompanied by supporting materials establishing substantial cause for the proposed rates.

(d) Each price cap tariff filing that proposes rates that will result in an API value that exceeds the applicable PCI value must be accompanied by:

(1) An explanation of the manner in which all costs have been allocated among baskets; and

(2) Within the affected basket, a cost assignment slowing down to the lowest possible level of disaggregation, including a detailed explanation of the reasons for the prices of all rate elements to which costs are not assigned.

(e) Each price cap tariff filing that proposes restructuring of existing rates must be accompanied by supporting materials sufficient to make the adjustments to each affected API and SBI required by §§ 61.46(c) and 61.47(d), respectively.

(f)(1) [Reserved]

(2) Each tariff filing submitted by a price cap local exchange carrier that introduces a new loop-based service, as defined in § 61.3(pp) of this part—including a restructured unbundled basic service element (BSE), as defined in § 69.2(mm) of this chapter, that constitutes a new loop-based service—that is or will later be included in a basket, must be accompanied by cost data sufficient to establish that the new loop-based service or unbundled BSE will not recover more than a just and reasonable portion of the carrier's overhead costs.

(3) A price cap local exchange carrier may submit without cost data any tariff filings that introduce new services, other than loop-based services.

(4) A price cap local exchange carrier that has removed its corridor or interstate ntraLATA toll services from its interexchange basket pursuant to § 61.42(d)(4)(ii), may submit its tariff filings for corridor or interstate intraLATA toll services without cost data.

(g) Each tariff filing submitted by a price cap local exchange carrier that introduces a new loop-based service or a restructured unbundled basic service element (BSE), as defined in § 69.2(mm)

of this chapter, that is or will later be included in a basket, or that introduces or changes the rates for connection charge subelements for expanded interconnection, as defined in §69.121 of this chapter, must also be accompanied by:

(1) The following, including complete explanations of the bases for the estimates.

(i) A study containing a projection of costs for a representative 12 month period; and

(ii) Estimates of the effect of the new tariff on the traffic and revenues from the service to which the new tariff applies, the carrier's other service classifications, and the carrier's overall traffic and revenues. These estimates must include the projected effects on the traffic and revenues for the same representative 12 month period used in paragraph (g)(1)(i) of this section.

(2) *Working papers and statistical data.* (i) Concurrently with the filing of any tariff change or tariff filing for a service not previously offered, the issuing carriers must file the working papers containing the information underlying the data supplied in response to paragraph (h)(1) of this section, and a clear explanation of how the working papers relate to that information.

(ii) All statistical studies must be submitted and supported in the form prescribed in §1.363 of the Commission's rules.

(h) Each tariff filing submitted by a price cap local exchange carrier that introduces or changes the rates for connection charge subelements for expanded interconnection, as defined in §69.121 of this chapter, must be accompanied by cost data sufficient to establish that such charges will not recover more than a just and reasonable portion of the carrier's overhead costs.

(i) [Reserved]

(j) For a tariff that introduces a system of density pricing zones, as described in §69.123 of this chapter, the carrier must, before filing its tariff, submit a density pricing zone plan including, *inter alia*, documentation sufficient to establish that the system of zones reasonably reflects cost-related characteristics, such as the density of total interstate traffic in central offices located in the respective zones, and receive approval of its proposed plan.

(k) In accordance with §§61.41 through 61.49, price cap local exchange carriers that elect to file their annual access tariff pursuant to section 204(a)(3) of the Communications Act shall submit supporting material for their interstate annual access tariffs, absent rate information, 90 days prior to July 1 of each year.

(l) On each page of cost support material submitted pursuant to this section, the issuing carrier shall indicate the transmittal number under which that page was submitted.

[54 FR 19843, May 8, 1989]

EDITORIAL NOTE: For FEDERAL REGISTER citations affecting §61.49, see the List of CFR Sections Affected, which appears in the Finding Aids section of the printed volume and at *www.fdsys.gov*.

§61.50 [Reserved]

Subpart F—Formatting and Notice Requirements for Tariff Publications

SOURCE: 76 FR 43215, July 20, 2011, unless otherwise noted.

§61.51 Scope.

The rules in this subpart apply to tariffs filed by issuing carriers, with the exception of the informational tariffs filed pursuant to 47 U.S.C. 226(h)(1)(A), unless otherwise noted.

[76 FR 43215, July 20, 2011]

§61.52 Form, size, type, legibility, etc.

(a) Pages of tariffs must be numbered consecutively and designated as ''Original title page,'' ''Original page 1,'' ''Original page 2,'' etc.

(1) All such pages must show, in the upper left-hand corner the name of the issuing carrier; in the upper right-hand corner the FCC number of the tariff, with the page designation directly below; in the lower left-hand corner the issued date; in the lower right-hand corner the effective date; and at the bottom, center, the street address of the issuing officer. The carrier must also specify the issuing officer's title either at the bottom center of all tariff

pages, or on the title page and check sheet only.

(2) As an alternative, the issuing carrier may show in the upper left-hand corner the name of the issuing carrier, the title and street address of the issuing officer, and the issued date; and in the upper right-hand corner the FCC number of the tariff, with the page designation directly below, and the effective date. The carrier must specify the issuing officer's title in the upper left-hand corner of either all tariff pages, or on the title page and check sheet only. A carrier electing to place the information at the top of the page should annotate the bottom of each page to indicate the end of the material, e.g., a line, or the term ''Printed in USA,'' or ''End''.

(3) Only one format may be employed in a tariff publication.

(b) All issuing carriers shall file all tariff publications and associated documents, such as transmittal letters, requests for special permission, and supporting information, electronically in accordance with the requirements set forth in §§ 61.13 through 61.17.

[49 FR 40869, Oct. 18, 1984, as amended at 58 FR 44906, Aug. 25, 1993; 62 FR 5778, Feb. 7, 1997; 63 FR 35541, June 30, 1998; 76 FR 43215, July 20, 2011]

§ 61.54 Composition of tariffs.

(a) Tariffs must contain in consecutive order: A title page; check sheet; table of contents; list of concurring, connecting, and other participating carriers; explanation of symbols and abbreviations; application of tariff; general rules (including definitions), regulations, exceptions and conditions; and rates. If the issuing carrier elects to add a section assisting in the use of the tariff, it should be placed immediately after the table of contents.

(b) The title page of every tarif__f and supplement must show:

(1) *FCC number, indication of cancellations.* In the upper right-hand corner, the designation of the tariff or supplement as ''FCC No. _____,'' or ''Supplement No. _____ to FCC No. _____,'' and immediately below, the FCC number or numbers of tariffs or supplements cancelled thereby.

(2) *Name of carrier, class of service, geographical application, means of transmission.* The exact name of the carrier, and such other information as may be necessary to identify the carrier issuing the tariff publication; a brief statement showing each class of service provided; the geographical application; and the type of facilities used to provide service.

(3) *Expiration date.* Subject to § 61.59, when the entire tariff or supplement is to expire with a fixed date, the expiration date must be shown in connection with the effective date in the following manner. Changes in expiration date must be made pursuant to the notice requirements of § 61.58, unless otherwise authorized by the Commission.

Expires at the end of ____ (date) unless sooner canceled, changed, or extended.

(4) *Title and address of issuing officer.* The title and street address of the officer issuing the tariff or supplement in the format specified in § 61.52.

(5) *Revised title page.* When a revised title page is issued, the following notation must be shown in connection with its effective date:

Original tariff __effective _____ (here show the effective date of the original tariff).

(c)(1)(i) The page immediately following the title page must be designated as ''Original page 1'' and captioned ''Check Sheet.'' When the original tariff is filed, the check sheet must show the number of pages contained in the tariff. For example, ''Page 1 to 150, inclusive, of this tariff are effective as of the date shown.'' When new pages are added, they must be numbered in continuing sequence, and designated as ''Original page _____ .'' For example, when the original tariff filed has 150 pages, the first page added after page 150 is to be designated as ''Original page 151,'' and the foregoing notation must be revised to include the added pages.

(ii) Alternatively, the carrier is permitted to number its tariff pages, other than the check sheet, to reflect the section number of the tariff as well as the page. For example, under this system, pages in section 1 of the tariff would be numbered 1–1, 1–2, etc., and pages in section 2 of the tariff would be numbered 2–1, 2–2, etc. Issuing carriers

shall utilize only one page numbering system throughout its tariff.

(2) If pages are to be inserted between numbered pages, each such page must be designated as an original page and must bear the number of the immediately preceding page followed by an alpha or numeric suffix. For example, when two new pages are to be inserted between pages 44 and 45 of the tariff, the first inserted page must be designated as Original page 44A or 44.1 and the second inserted page as Original page 44B or 44.2. Issuing carriers may not utilize both the alpha and numeric systems in the same publication.

(3)(i) When pages are revised, when new pages (including pages with letter or numeric suffix as set forth above) are added to the tariff, or when supplements are issued, the check sheet must be revised accordingly. Revised check sheets must indicate with an asterisk the specific pages added or revised. In addition to the notation in (1), the check sheet must list, under the heading ''The original and revised pages named below (and Supplement No. _____) contain all changes from the original tariff that are in effect on the date shown,'' all original pages in numerical order that have been added to the tariff and the pages which have been revised, including the revision number. For example:

Page	Number of revision except as indicated
Title	1st
1	*8th
3	5th
5A	*Orig.
10	*8th
151	Orig.

*New or Revised page.

(ii) On each page, the carrier shall indicate the transmittal number under which that page was submitted.

(4) Changes in, and additions to tariffs must be made by reprinting the page upon which a change or addition is made. Such changed page is to be designated as a revised page, cancelling the page which it amends. For example, ''First revised page 1 cancels original page 1,'' or ''Second revised page 2 cancels first revised page 2,'' etc. When a revised page omits rates or regulations previously published on the page which it cancels, but such rates or regulations are published on another page, the revised page must make specific reference to the page on which the rates or regulations will be found. This reference must be accomplished by inserting a sentence at the bottom of the revised page that states ''Certain rates (or regulations) previously found on this page can now be found on page _____.'' In addition, the page on which the omitted material now appears must bear the appropriate symbol opposite such material, and make specific reference to the page from which the rates or regulations were transferred. This reference must be accomplished by inserting a sentence at the bottom of the other page that states ''Certain rates (or regulations) on this page formerly appeared on page _____.''

(5) Rejected pages must be treated as indicated in §61.69.

(d) *Table of contents.* The table of contents must contain a full and complete statement showing the exact location and specifying the page or section and page numbers, where information by subjects under general headings will be found. If a tariff contains so small a volume of matter that its title page or its interior arrangement plainly discloses its contents, the table of contents may be omitted.

(e) *Tariff User's guide.* At its option, a carrier may include a section explaining how to use the tariff.

(f) *List of concurring carriers.* This list must contain the exact name or names of carriers concurring in the tariff, alphabetically arranged, and the name of the city or town in which the principal office of every such carrier is located. If there are no concurring carriers, then the statement ''no concurring carriers'' must be made at the place where the names of the concurring carriers would otherwise appear. If the concurring carriers are numerous, their names may be stated in alphabetical order in a separate tariff filed with the Commission by the issuing carrier. Specific reference to such separate tariff by FCC number must be made in the tariff at the place where such names would otherwise appear.

(g) *List of connecting carriers.* This list must contain the exact name or names

of connecting carriers, alphabetically arranged, for which rates or regulations are published in the tariff, and the name of the city or town in which the principal office of every such carrier is located. If there are no connecting carriers, then the statement ''no connecting carriers'' must be made at the place where their names would otherwise appear. If connecting carriers are numerous, their names may be stated in alphabetical order in a separate tariff filed with the Commission by the issuing carrier. Specific reference to such separate tariff by FCC number must be made in the tariff at the place where such names would otherwise appear.

(h) *List of other participating carriers.* This list must contain the exact name of every other carrier subject to the Act engaging or participating in the communication service to which the tariff or supplement applies, together with the name of the city or town in which the principal office of such carrier is located. If there is no such other carrier, then the statement ''no participating carriers'' must be made at the place where the names of such other carriers would otherwise appear. If such other carriers are numerous, their names may be stated in alphabetical order in a separate tariff filed with the Commission by the issuing carrier. Specific reference must be made in the tariff at the place where such names would otherwise appear. The names of concurring and connecting carriers properly listed in a tariff published by any other participating carrier need not be repeated in this list.

(i)(1) *Symbols, reference marks, abbreviations.* The tariff must contain an explanation of symbols, reference marks, and abbreviations of technical terms used. The following symbols used in tariffs are reserved for the purposes indicated below:

R to signify reduction.
I to signify increase.
C to signify changed regulation.
T to signify a change in text but no change in rate or regulation.
S to signify reissued matter.
M to signify matter relocated without change.
N to signify new rate or regulation.
D to signify discontinued rate or regulation.
Z to signify a correction.

(2) The uniform symbols must be used as follows.

(i) When a change of the same character is made in all or in substantially all matter in a tariff, it may be indicated at the top of the title page of the tariff or at the top of each affected page, in the following manner: ''All rates in this tariff are increases,'' or, ''All rates on this page are reductions, except as otherwise indicated.''

(ii) When a change of the same character is made in all or substantially all matters on a page or supplement, it may be indiated at the top of the page or supplement in the following manner: All rates on this page (or supplement) are increases,'' or, ''All rates on this page (or supplement) are reductions except as otherwise indicated.''

(3) Items which have not been in effect 30 days when brought forward on revised pages must be shown as reissued, in the manner prescribed in § 61.54(i)(1). The number and original effective date of the tariff publication in which the matter was originally published must be associated with the reissued matter. Items which have been in effect 30 days or more and are brought forward without change on revised pages must not be shown as reissued items.

(j) *Rates and general rules, regulations, exceptions and conditions.* The general rules (including definitions), regulations, exceptions, and conditions which govern the tariff must be stated clearly and definitely. All general rules, regulations, exceptions or conditions which in any way affect the rates named in the tariff must be specified. A special rule, regulation, exception or condition affecting a particular item or rate must be specifically referred to in connection with such item or rate. Rates must be expressed in United States currency, per chargeable unit of service for all communication services, together with a list of all points of service to and from which the rates apply. They must be arranged in a simple and systematic manner. Complicated or ambiguous terminology may not be used, and no rate, rule, regulation, exception or condition shall be included

which in any way attempts to substitute a rate, rule, regulation, exception or condition named in any other tariff.

[49 FR 40869, Oct. 18, 1984, as amended at 64 FR 46591, Aug. 26, 1999]

§ 61.55 Contract-based tariffs.

(a) This section shall apply to price cap local exchange carriers permitted to offer contract-based tariffs under § 69.727(a) of this chapter.

(b) Composition of contract-based tariffs shall comply with §§ 61.54(b) through (i).

(c) Contract-based tariffs shall include the following:

(1) The term of contract, including any renewal options;

(2) A brief description of each of the services provided under the contract;

(3) Minimum volume commitments for each service;

(4) The contract price for each service or services at the volume levels committed to by the customers;

(5) A general description of any volume discounts built into the contract rate structure; and

(6) A general description of other classifications, practices, and regulations affecting the contract rate.

[64 FR 51266, Sept. 22, 1999, as amended at 76 FR 43216, July 20, 2011]

§ 61.58 Notice requirements.

(a) Every proposed tariff filing must bear an effective date and, except as otherwise provided by regulation, special permission, or Commission order, must be made on at least the number of days notice specified in this section.

(1) Notice is accomplished by filing the proposed tariff changes with the Commission. Any period of notice specified in this section begins on and includes the date the tariff is received by the Commission, but does not include the effective date. If a tariff filing proposes changes governed by more than one of the notice periods listed below, the longest notice period will apply. In computing the notice period required, all days including Sundays and holidays must be counted.

(2)(i) Local exchange carriers may file tariffs pursuant to the streamlined tariff filing provisions of section 204(a)(3) of the Communications Act. Such a tariff may be filed on 7 days' notice if it proposes only rate decreases. Any other tariff filed pursuant to section 204(a)(3) of the Communications Act, including those that propose a rate increase or any change in terms and conditions, shall be filed on 15 days' notice. Any tariff filing made pursuant to section 204(a)(3) of the Communications Act must comply with the applicable cost support requirements specified in this part.

(ii) Local exchange carriers may elect not to file tariffs pursuant to section 204(a)(3) of the Communications Act. For dominant carriers, any such tariffs shall be filed on at least 16 days' notice. For nondominant carriers, any such tariffs shall be filed on at least one days' notice.

(iii) Except for tariffs filed pursuant to section 204(a)(3) of the Communications Act, the Chief, Wireline Competition Bureau, may require the deferral of the effective date of any filing made on less than 120 days' notice, so as to provide for a maximum of 120 days' notice, or of such other maximum period of notice permitted by section 203(b) of the Communications Act, regardless of whether petitions under § 1.773 of this chapter have been filed.

(3) Tariff filings proposing corrections or voluntarily deferring the effective date of a pending tariff revision must be made on at least 3 days' notice, and may be filed notwithstanding the provisions of § 61.59. Corrections to tariff materials not yet effective cannot take effect before the effective date of the original material. Deferrals must take effect on or before the current effective date of the pending tariff revisions being deferred.

(4) This subsection applies only to dominant carriers. If the tariff publication would increase any rate or charge, or would effectuate and authorized discountinuance, reduction or other impairment of service to any customer, the offering carrier must inform the affected customers of the content of the tariff publication. Such notification should be made in a form appropriate to the circumstance, and may include written notification, personal contact, or advertising in newspapers of general circulation.

(b) Tariffs for new services filed by price cap local exchange carriers shall be filed on at least one day's notice.

(c) Contract-based tariffs filed by price cap local exchange carriers pursuant to § 69.727(a) of this chapter shall be filed on at least one day's notice.

(d)(1) A price cap local exchange carrier that is filing a tariff revision to remove its corridor or interstate intraLATA toll services from its interexchange basket pursuant to § 61.42(d)(4)(ii) shall submit such filing on at least fifteen days' notice.

(2) A price cap local exchange carrier that has removed its corridor and interstate intraLATA toll services from its interexchange basket pursuant to § 61.42(d)(4)(ii) shall file subsequent tariff filings for corridor or interstate intraLATA toll services on at least one day's notice.

(e) *Non-price cap local exchange carriers and/or services.* (1) Tariff filings in the instances specified in paragraphs (e)(1) (i), (ii), and (iii) of this section by dominant carriers must be made on at least 15 days' notice.

(i) Tariffs filed in the first instance by new carriers.

(ii) Tariffs filings involving new rates and regulations not previously filed at, from, to or via points on new lines; at, from to or via new radio facilities; or for new points of radio communication.

(iii) Tariff filings involving a change in the name of a carrier, a change in Vertical or Horizontal coordinates (or other means used to determine airline mileages), a change in the lists of mileages, a change in the lists of connecting, concurring or other participating carriers, text changes, or the imposition of termination charges calculated from effective tariff provisions. The imposition of termination charges does not include the initial filing of termination liability provisions.

(2) Tariff filings involving a change in rate structure, a new offering, or a rate increase must be made on at least 45 days' notice.

(3) Alascom, Inc. shall file its annual tariff revisions for its Common Carrier Services (Alascom Tariff F.C.C No. 11) on at least 35 days' notice.

(4) All tariff filings not specifically assigned a different period of public notice in this part must be made on at least 35 days' notice.

(f) All tariff filings of domestic and international non-dominant carriers must be made on at least one days' notice.

[49 FR 40869, Oct. 18, 1984, as amended at 54 FR 19844, May 8, 1989; 55 FR 42384, Oct. 19, 1990; 56 FR 1500, Jan. 15, 1991; 56 FR 5956, Feb. 14, 1991; 56 FR 55239, Oct. 25, 1991; 58 FR 36149, July 6, 1993; 59 FR 10304, Mar. 4, 1994; 62 FR 5778, Feb. 7, 1997; 64 FR 46591, Aug. 26, 1999; 64 FR 51266, Sept. 22, 1999; 67 FR 13228, Mar. 21, 2002; 76 FR 43216, July 20, 2011]

§ 61.59 Effective period required before changes.

(a) Except as provided in § 61.58(a)(3) or except as otherwise authorized by the Commission, new rates or regulations must be effective for at least 30 days before a dominant carrier will be permitted to make any change.

(b) Changes to rates and regulations for dominant carriers that have not yet become effective, i.e., are pending, may not be made unless the effective date of the proposed changes is at least 30 days after the scheduled effective date of the pending revisions.

(c) Changes to rates and regulations for dominant carriers that have taken effect but have not been in effect for at least 30 days may not be made unless the scheduled effective date of the proposed changes is at least 30 days after the effective date of the existing regulations.

[64 FR 46592, Aug. 26, 1999, as amended at 76 FR 43216, July 20, 2011]

Subpart G—Specific Rules for Tariff Publications of Dominant and Nondominant Carriers

SOURCE: 49 FR 40869, Oct. 18, 1984, unless otherwise noted. Redesignated at 76 FR 43215, July 20, 2011.

§ 61.66 Scope.

The rules in this subpart apply to all issuing carriers, unless otherwise noted.

[76 FR 43216, July 20, 2011]

§ 61.68 Special notations.

(a) Any tariff filing made pursuant to an Application for Special Permission,

Commission decision or order must contain the following statement:

Issued under authority of (specific reference to the special permission, Commission decision, or order) of the Commission.

(b) When a portion of any tariff publication is issued in order to comply with the Commission order, the following notation must be associated with that portion of the tariff publication:

In compliance with the order of the Federal Communications Commission in __ (a specific citation to the applicable order should be made).

[49 FR 40869, Oct. 18, 1984, as amended at 76 FR 43216, July 20, 2011]

§ 61.69 Rejection.

When a tariff publication is rejected by the Commission, its number may not be used again. This includes, but is not limited to, such publications as tariff numbers or specific page revision numbers. The rejected tariff publication may not be referred to as either cancelled or revised. Within five business days of the release date of the Commission's Order rejecting such tariff publication, the issuing carrier shall file tariff revisions removing the rejected material, unless the Commission's Order establishes a different date for this filing. The publication that is subsequently issued in lieu of the rejected tariff publication must bear the notation:

In lieu of ____, rejected by the Federal Communications Commission.

[64 FR 46592, Aug. 26, 1999]

§ 61.72 Public information requirements.

(a) Issuing carriers must make available accurate and timely information pertaining to rates and regulations subject to tariff filing requirements.

(b) Issuing carriers must, at a minimum, provide a telephone number for public inquiries about information contained in its tariffs. This telephone number should be made readily available to all interested parties.

(c) Any issuing carrier that is an incumbent local exchange carrier, and chooses to establish an Internet web site, must make its tariffs available on that web site, in addition to the Commission's web site.

[64 FR 46592, Aug. 26, 1999]

§ 61.73 Duplication of rates or regulations.

A carrier concurring in schedules of another carrier must not publish conflicting or duplicative rates or regulations.

§ 61.74 References to other instruments.

(a) Except as otherwise provided in this and other sections of this part, no tariff publication filed with the Commission may make reference to any other tariff publication or to any other document or instrument.

(b) Tariffs for end-on-end through services may reference the tariffs of other carriers participating in the offering.

(c) Tariffs may reference concurrences for the purpose of starting where rates or regulations applicable to a service not governed by the tariff may be found.

(d) Tariffs may reference other FCC tariffs that are in effect and on file with the Commission for purposes of determining mileage, or specifying the operating centers at which a specific service is available.

(e) Tariffs may reference technical publications which describe the engineering, specifications, or other technical aspects of a service offering, provided the following conditions are satisfied:

(1) The tariff must contain a general description of the service offering, including basic parameters and structural elements of the offering;

(2) The technical publication includes no rates, regulatory terms, or conditions which are required to be contained in the tariff, and any revisions to the technical publication do not affect rates, regulatory terms, or conditions included in the tariff, and do not change the basic nature of the offering;

(3) The tariff indicates where the technical publication can be obtained;

(4) The referenced technical publication is publicly available before the tariff is scheduled to take effect; and

(5) The issuing carrier regularly revises its tariff to refer to the current

edition of the referenced technical publication.

[49 FR 40869, Oct. 18, 1984, as amended at 61 FR 59366, Nov. 22, 1996; 64 FR 46592, Aug. 26, 1999; 66 FR 16881, Mar. 28, 2001]

§ 61.83 Consecutive numbering.

Issuing carriers should file tariff publications under consecutive FCC numbers. If this cannot be done, a memorandum containing an explanation of the missing number or numbers must be submitted. Supplements to a tariff must be numbered consecutively in a separate series.

[76 FR 43216, July 20, 2011]

§ 61.86 Supplements.

An issuing carrier may not file a supplement except to suspend or cancel a tariff publication, or to defer the effective date of pending tariff revisions. A carrier may file a supplement for the voluntary deferral of a tariff publication.

[76 FR 43216, July 20, 2011]

§ 61.87 Cancellation of tariffs.

(a) An issuing carrier may cancel an entire tariff. Cancellation of a tariff automatically cancels every page and supplement to that tariff except for the canceling Title Page or first page.

(1) If the existing service(s) will be provided under another carrier's tariff, then

(i) The issuing carrier whose tariff is being canceled must revise the Title Page or the first page of its tariff indicating that the tariff is no longer effective, or

(ii) The issuing carrier under whose tariff the service(s) will be provided must revise the Title Page or first page of the tariff to be canceled, using the name and numbering shown in the heading of the tariff to be canceled, indicating that the tariff is no longer effective. This carrier must also file with the Commission the new tariff provisions reflecting the service(s) being canceled. Both filings must be effective on the same date and may be filed under the same transmittal.

(2) If a carrier canceling its tariff intends to cease to provide existing service, then it must revise the Title Page or first page of its tariff indicating that the tariff is no longer effective.

(3) A carrier canceling its tariff, as described in this section, must comply with §§ 61.54(b)(1) and 61.54(b)(5), as applicable.

(b) When a carrier cancels a tariff as described in this section, the canceling Title Page or the first page of the canceled tariff must show where all rates and regulations will be found except for paragraph (c) of this section. The Title Page or first page of the new tariff must indicate the name of the carrier and tariff number where the canceled material had been found.

(c) When a carrier ceases to provide service(s) without a successor, it must cancel its tariff pursuant to the notice requirements of § 61.58, as applicable, unless otherwise authorized by the Commission.

[64 FR 46591, Aug. 26, 1999, as amended at 76 FR 43216, July 20, 2011]

Subpart H—Concurrences

SOURCE: 49 FR 40869, Oct. 18, 1984. Redesignated at 76 FR 43215, July 20, 2011, unless otherwise noted.

§ 61.131 Scope.

Sections 61.132 through 61.136 apply to a carrier which must file concurrences reflecting rates and regulations for through service provided in conjunction with other carriers and to a carrier which has chosen, as an alternative to publishing its own tariff, to arrange concurrence in an effective tariff of another carrier. Limited or partial concurrences will not be permitted.

§ 61.132 Method of filing concurrences.

A carrier proposing to concur in another carrier's effective tariff must deliver one copy of the concurrence to the issuing carrier in whose favor the concurrence is issued. The concurrence must be signed by an officer or agent of the carrier executing the concurrence, and must be numbered consecutively in a separate series from its FCC tariff numbers. At the same time the issuing carrier revises its tariff to reflect such a concurrence, it must file one copy of the concurrence electronically with

the Commission in accordance with the requirements set forth in § 61.13 through § 61.17. The concurrence must bear the same effective date as the date of the tariff filing reflecting the concurrence. Carriers shall file revisions reflecting concurrences in their tariffs on the notice period specified in § 61.58.

[76 FR 43216, July 20, 2011]

§ 61.133 Format of concurrences.

(a) Concurrences must be issued in the following format:

CONCURRENCE

F.C.C. Concurrence No. _____
(Cancels F.C.C. Concurrence No. ____
(Name of Carrier _____)
(Post Office Address _____)
(Date) _____ 19____.
Secretary,
Federal Communications Commission, Washington, D.C. 20554.

This is to report that (name of concurring carrier) assents to and concurs in the tariffs described below. (Name of concurring carrier) thus makes itself a party to these tariffs and obligates itself (and its connecting carriers) to observe every provision in them, until a notice of revocation is filed with the Commission and delivered to the issuing carrier.

This concurrence applies to interstate (and foreign) communication:

1. Between the different points on the concurring carrier's own system;
2. Between all points on the concurring carrier's system and the systems of its connecting carriers; and
3. Between all points on the system of the concurring carrier and the systems of its connecting carriers on the one hand, and, on the other hand, all points on the system of the carrier issuing the tariff or tariffs listed below and the systems of its connecting carriers and other carriers with which through routes have been established.

(NOTE: Any of the above numbered paragraphs may be omitted or the wording modified to state the points to which the concurrence applies.)

TARIFF

(Here describe the tariff or tariffs concurred in by the carrier, specifying FCC number, title, date of issuance, and date effective. Example: A.B.C. Communications Company, Tariff FCC No. 1, Interstate Telegraph Message Service, Issued January 1, 1983, Effective April 1, 1983).

Cancels FCC Concurrence No._____, effective _____, 19____.

(Name of concurring carrier) _____
By _____
(Title) _____

(b) No material is to be included in a concurrence other than that indicated in the above-prescribed form, unless specially authorized by the Commission. A concurrence in any tariff so described will be deemed to include all amendments and successive issues which the issuing carrier may make and file. All such amendments and successive issues will be binding between customers and carriers. Between carriers themselves, however, the filing by the issuing carrier of an amendment or successive issue with the Commission must not imply or be construed to imply an agreement to the filing by concurring carriers. Such filings do not affect the contractual rights or remedies of any concurring carrier(s) which have not, by contract or otherwise, specifically consented in advance to such amendment or successive issue.

§ 61.134 Concurrences for through services.

An issuing carrier filing rates or regulations for through services between points on its own system and points on another carrier's system (or systems), or between points on another carrier's system (or systems), must list all concurring, connecting or other participating carriers as provided in § 61.54 (f), (g) and (h). A concurring carrier must tender a properly executed instrument of concurrence to the issuing carrier. If rates and regulations of the other carriers engaging in the through service(s) are not specified in the issuing carrier's tariff, that tariff must state where the other carrier's rates and regulations can be found. Such reference(s) must contain the FCC number(s) of the referenced tariff publication(s), the exact name(s) of the carrier(s) issuing such tariff publication(s), and must clearly state how the rates and regulations in the separate publications apply.

[76 FR 43216, July 20, 2011]

§ 61.135 Concurrences for other purposes.

When an issuing carrier permits another carrier to concur in its tariff, the issuing carrier's tariff must state the

concurring carrier's rates and points of service.

§ 61.136 Revocation of concurrences.

A concurrence may be revoked by a revocation notice or cancelled by a new concurrence. A revocation notice or a new concurrence, if less broad in scope than the concurrence it cancels, must bear an effective date not less than 45 days after its receipt by the Commission. A revocation notice is not given a serial number, but must specify the number of the concurrence to be revoked and the name of the carrier in whose favor the concurrence was issued. It must be in the following format:

REVOCATION NOTICE

(Name of carrier _____)
(Post office address _____)
(Date) _____, 19____.
Secretary,
Federal Communications Commission, Washington, D.C. 20554.

Effective _____, 19____ FCC Concurrence No. ____, issued by (Name of concurring carrier) in favor of (Name of issuing carrier) is hereby cancelled and revoked. Rates and regulations of (Name of concurring carrier) and its connecting carriers will thereafter be found in Tariff FCC No. ____ issued by _____ (If the concurring carrier has ceased operations, the revocation notice must so indicate.)

(Name of carrier) _____
By _____
(Title) _____

Subpart I—Adoption of Tariffs and Other Documents of Predecessor Carriers

§ 61.171 Adoption notice.

When a carrier's name is changed, or its operating control transferred from one carrier to another in whole or in part, the successor carrier must file tariff revisions to reflect the name change. The successor carrier may either immediately reissue the entire tariff in its own name, or immediately file an adoption notice. Within 35 days of filing an adoption notice, the successor must reissue the entire tariff in its own name. The reissued tariff must be numbered in the series of the successor carrier, and must contain all original pages without changes in regulations or rates. The transmittal letter must state the tariff is being filed to show a change in the carrier's name pursuant to § 61.171 of the Commission's Rules. The adoption notice, if used, must read as follows:

The (Exact name of successor carrier or receiver) here adopts, ratifies and makes its own in every respect, all applicable tariffs and amendments filed with the Federal Communications Commission by (predecessor) prior to (date).

§ 61.172 Changes to be incorporated in tariffs of successor carrier.

When only a portion of properties is transferred to a successor carrier, that carrier must incorporate in its tariff the rates applying locally between points on the transferred portion. Moreover, the predecessor carrier must simultaneously cancel the corresponding rates from its tariffs, and reference the FCC number of the successor carrier's tariff containing the rates that will thereafter apply.

Subpart J—Suspensions

§ 61.191 Carrier to file supplement when notified of suspension.

If an issuing carrier is notified by the Commission that its tariff publication has been suspended, the carrier must file, within five business days from the release date of the suspension order, a consecutively numbered supplement without an effective date, which specifies the schedules which have been suspended.

[76 FR 43217, July 20, 2011]

§ 61.192 Contents of supplement announcing suspension.

(a) A supplement announcing a suspension by the Commission must specify the term of suspension imposed by the Commission.

(b) A supplement announcing a suspension of either an entire tariff or a part of a tariff publication, must specify the applicable tariff publication effective during the period of suspension.

§ 61.193 Vacation of suspension order; supplements announcing same; etc.

If the Commission vacates a suspension order, the affected carrier must

issue a supplement or revised page stating the Commission's action as well as the lawful schedules.

PART 63—EXTENSION OF LINES, NEW LINES, AND DISCONTINUANCE, REDUCTION, OUTAGE AND IMPAIRMENT OF SERVICE BY COMMON CARRIERS; AND GRANTS OF RECOGNIZED PRIVATE OPERATING AGENCY STATUS

EXTENSIONS AND SUPPLEMENTS

Sec.
63.01 Authority for all domestic common carriers.
63.02 Exemptions for extensions of lines and for systems for the delivery of video programming.
63.03 Streamlining procedures for domestic transfer of control applications.
63.04 Filing procedures for domestic transfer of control applications.
63.09 Definitions applicable to international Section 214 authorizations.
63.10 Regulatory classification of U.S. international carriers.
63.11 Notification by and prior approval for U.S. international carriers that are or propose to become affiliated with a foreign carrier.
63.12 Processing of international Section 214 applications.
63.13 Procedures for modifying regulatory classification of U.S. international carriers from dominant to non-dominant.
63.14 Prohibition on agreeing to accept special concessions.
63.16 Switched services over private lines.
63.17 Special provisions for U.S. international common carriers.
63.18 Contents of applications for international common carriers.
63.19 Special procedures for discontinuances of international services.
63.20 Electronic filing, copies required; fees; and filing periods for international service providers.
63.21 Conditions applicable to all international Section 214 authorizations.
63.22 Facilities-based international common carriers.
63.23 Resale-based international common carriers.
63.24 Assignments and transfers of control.
63.25 Special provisions relating to temporary or emergency service by international carriers.

GENERAL PROVISIONS RELATING TO ALL APPLICATIONS UNDER SECTION 214

63.50 Amendment of applications.
63.51 Additional information.
63.52 Copies required; fees; and filing periods for domestic authorizations.
63.53 Form.

DISCONTINUANCE, REDUCTION, OUTAGE AND IMPAIRMENT

63.60 Definitions.
63.61 Applicability.
63.62 Type of discontinuance, reduction, or impairment of telephone or telegraph service requiring formal application.
63.63 Emergency discontinuance, reduction, or impairment of service.
63.65 Closure of public toll station where another toll station of applicant in the community will continue service.
63.66 Closure of or reduction of hours of service at telephone exchanges at military establishments.
63.71 Procedures for discontinuance, reduction or impairment of service by domestic carriers.
63.90 Publication and posting of notices.
63.100 Notification of service outage.

CONTENTS OF APPLICATIONS; EXAMPLES

63.500 Contents of applications to dismantle or remove a trunk line.
63.501 Contents of applications to sever physical connection or to terminate or suspend interchange of traffic with another carrier.
63.504 Contents of applications to close a public toll station where no other such toll station of the applicant in the community will continue service and where telephone toll service is not otherwise available to the public through a telephone exchange connected with the toll lines of a carrier.
63.505 Contents of applications for any type of discontinuance, reduction, or impairment of telephone service not specifically provided for in this part.
63.601 Contents of applications for authority to reduce the hours of service of public coast stations under the conditions specified in § 63.70.

REQUEST FOR DESIGNATION AS A RECOGNIZED PRIVATE OPERATING AGENCY

63.701 Contents of application.
63.702 Form.

AUTHORITY: Sections 1, 4(i), 4(j), 10, 11, 201–205, 214, 218, 403 and 651 of the Communications Act of 1934, as amended, 47 U.S.C. 151, 154(i), 154(j), 160, 201–205, 214, 218, 403, and 571, unless otherwise noted.

SOURCE: 28 FR 13229, Dec. 5, 1963, unless otherwise noted.

EXTENSIONS AND SUPPLEMENTS

§ 63.01 Authority for all domestic common carriers.

(a) Any party that would be a domestic interstate communications common carrier is authorized to provide domestic, interstate services to any domestic point and to construct or operate any domestic transmission line as long as it obtains all necessary authorizations from the Commission for use of radio frequencies.

(b) Domestic common carriers subject to this section shall not engage in any line construction that may have a significant effect on the environment as defined in § 1.1307 of this chapter without prior compliance with the Commission's environmental rules. See § 1.1312 of this chapter.

[64 FR 39939, July 23, 1999, as amended at 67 FR 18830, Apr. 17, 2002]

§ 63.02 Exemptions for extensions of lines and for systems for the delivery of video programming.

(a) Any common carrier is exempt from the requirements of section 214 of the Communications Act of 1934, as amended, for the extension of any line.

(b) A common carrier shall not be required to obtain a certificate under section 214 of the Communications Act of 1934 with respect to the establishment or operation of a system for the delivery of video programming.

[64 FR 39939, July 23, 1999]

§ 63.03 Streamlining procedures for domestic transfer of control applications.

Any domestic carrier that seeks to transfer control of lines or authorization to operate pursuant to section 214 of the Communications Act of 1934, as amended, shall be subject to the following procedures:

(a) *Public notice and review period.* Upon determination by the Common Carrier Bureau that the applicants have filed a complete application and that the application is appropriate for streamlined treatment, the Common Carrier Bureau will issue a public notice stating that the application has been accepted for filing as a streamlined application. Unless otherwise notified by the Commission, an applicant is permitted to transfer control of the domestic lines or authorization to operate on the 31st day after the date of public notice listing a domestic section 214 transfer of control application as accepted for filing as a streamlined application, but only in accordance with the operations proposed in its application. Comments on streamlined applications may be filed during the first 14 days following public notice, and reply comments may be filed during the first 21 days following public notice, unless the public notice specifies a different pleading cycle. All comments on streamlined applications shall be filed electronically, and shall satisfy such other filing requirements as may be specified in the public notice.

(b) *Presumptive streamlined categories.* (1) The streamlined procedures provided in this rule shall be presumed to apply to all transfer of control applications in which:

(i) Both applicants are non-facilities-based carriers;

(ii) The transferee is not a telecommunications provider; or

(iii) The proposed transaction involves only the transfer of the local exchange assets of an incumbent LEC by means other than an acquisition of corporate control.

(2) Where a proposed transaction would result in a transferee having a market share in the interstate, interexchange market of less than 10 percent, and the transferee would provide competitive telephone exchange services or exchange access services (if at all) exclusively in geographic areas served by a dominant local exchange carrier that is not a party to the transaction, the streamlined procedures provided in this rule shall be presumed to apply to transfer of control applications in which:

(i) Neither of the applicants is dominant with respect to any service;

(ii) The applicants are a dominant carrier and a non-dominant carrier that provides services exclusively outside the geographic area where the dominant carrier is dominant; or

(iii) The applicants are incumbent independent local exchange carriers (as defined in § 64.1902 of this chapter) that have, in combination, fewer than two (2) percent of the nation's subscriber

lines installed in the aggregate nationwide, and no overlapping or adjacent service areas.

(3) For purposes of (b)(1) and (2) of this paragraph, the terms ''applicant,'' ''carrier,'' ''party,'' and ''transferee'' (and their plural forms) include any affiliates of such entities within the meaning of section 3(1) of the Communications Act of 1934, as amended.

(c) *Removal of application from streamlined processing.* (1) At any time after an application is filed, the Commission, acting through the Chief of the Wireline Competition Bureau, may notify an applicant that its application is being removed from streamlined processing, or will not be subject to streamlined processing. Examples of appropriate circumstances for such action are:

(i) An application is associated with a non-routine request for waiver of the Commission's rules;

(ii) An application would, on its face, violate a Commission rule or the Communications Act;

(iii) An applicant fails to respond promptly to Commission inquiries;

(iv) Timely-filed comments on the application raise public interest concerns that require further Commission review; or

(v) The Commission, acting through the Chief of the Wireline Competition Bureau, otherwise determines that the application requires further analysis to determine whether a proposed transfer of control would serve the public interest.

(2) Notification will be by public notice that states the reason for removal or non-streamlined treatment, and indicates the expected timeframe for Commission action on the application. Except in extraordinary circumstances, final action on the application should be expected no later than 180 days from public notice that the application has been accepted for filing.

(d) Pro forma transactions. (1) Any party that would be a domestic common carrier under section 214 of the Communications Act of 1934, as amended, is authorized to undertake any corporate restructuring, reorganization or liquidation of internal business operations that does not result in a change in ultimate ownership or control of the carrier's lines or authorization to operate, including transfers in bankruptcy proceedings to a trustee or to the carrier itself as a debtor-in-possession.[1] Under this rule, a transfer of control of a domestic line or authorization to operate is considered pro forma when, together with all previous internal corporate restructurings, the transaction does not result in a change in the carrier's ultimate ownership or control, or otherwise falls into one of the illustrative categories found in § 63.24 of this part governing transfers of control of international carriers under section 214 of the Communications Act of 1934, as amended.

(2) Any party that would be a domestic common carrier under section 214 of the Communications Act of 1934, as amended, must notify the Commission no later than 30 days after control of the carrier is transferred to a trustee under Chapter 7 of the Bankruptcy Code, a debtor-in-possession under Chapter 11 of the Bankruptcy Code, or any other party pursuant to any applicable chapter of the Bankruptcy Code when that transfer does not result in a change in ultimate ownership or control of the carrier's lines or authorization to operate. The notification can be in the form of a letter (in duplicate to the Secretary). The letter or other form of notification must also contain the information listed in paragraphs (a)(1) through (a)(4) in § 63.04. A single letter may be filed for more than one such transfer of control. If a carrier files a discontinuance request within 30 days of the transfer in bankruptcy, the Commission will treat the discontinuance request as sufficient to fulfill the pro forma post-transaction notice requirement.

(3) Notwithstanding any other provision in this part, any party that would be a domestic common carrier under section 214 of the Communications Act of 1934, as amended, including a carrier that begins providing service through a differently named subsidiary after an

[1] ''Control'' includes actual working control in whatever manner exercised and is not limited to majority stock ownership. ''Control'' also includes direct or indirect ownership or control, such as through intervening subsidiaries. *See* 47 CFR 63.09.

internal corporate restructuring, remains subject to all applicable conditions of service after an internal restructuring, such as rules governing slamming and tariffing.

[67 FR 18831, Apr. 17, 2002; 67 FR 21803, May 1, 2002]

§ 63.04 Filing procedures for domestic transfer of control applications

(a) *Domestic services only*. A carrier seeking domestic section 214 authorization for transfer of control should file an application containing:

(1) The name, address and telephone number of each applicant;

(2) The government, state, or territory under the laws of which each corporate or partnership applicant is organized;

(3) The name, title, post office address, and telephone number of the officer or contact point, such as legal counsel, to whom correspondence concerning the application is to be addressed;

(4) The name, address, citizenship and principal business of any person or entity that directly or indirectly owns at least ten (10) percent of the equity of the applicant, and the percentage of equity owned by each of those entities (to the nearest one (1) percent);

(5) Certification pursuant to §§ 1.2001 through 1.2003 of this chapter that no party to the application is subject to a denial of Federal benefits pursuant to section 5301 of the Anti-Drug Abuse Act of 1988. *See* 21 U.S.C. 853.

(6) A description of the transaction;

(7) A description of the geographic areas in which the transferor and transferee (and their affiliates) offer domestic telecommunications services, and what services are provided in each area;

(8) A statement as to how the application fits into one or more of the presumptive streamlined categories in this section or why it is otherwise appropriate for streamlined treatment;

(9) Identification of all other Commission applications related to the same transaction;

(10) A statement of whether the applicants are requesting special consideration because either party to the transaction is facing imminent business failure;

(11) Identification of any separately filed waiver requests being sought in conjunction with the transaction; and

(12) A statement showing how grant of the application will serve the public interest, convenience and necessity, including any additional information that may be necessary to show the effect of the proposed transaction on competition in domestic markets.

(b) *Domestic/International applications for transfers of control*. Where an applicant wishes to file a joint international section 214 transfer of control application and domestic section 214 transfer of control application, the applicant should submit information that satisfies the requirements of § 63.18, which specifies the contents of applications for international authorizations, together with filing fees that satisfy (and are in accordance with filing procedures applicable to) both §§ 1.1105 and 1.1107 of this chapter. In an attachment to the international application, the applicant should submit the information described in paragraphs (a)(6) through (a)(12) of this section.

[67 FR 18832, Apr. 17, 2002]

§ 63.09 Definitions applicable to international Section 214 authorizations.

The following definitions shall apply to §§ 63.09–63.24 of this part, unless the context indicates otherwise:

(a) *Facilities-based carrier* means a carrier that holds an ownership, indefeasible-right-of-user, or leasehold interest in bare capacity in the U.S. end of an international facility, regardless of whether the underlying facility is a common carrier or non-common carrier submarine cable or a satellite system.

(b) *Control* includes actual working control in whatever manner exercised and is not limited to majority stock ownership. *Control* also includes direct or indirect control, such as through intervening subsidiaries.

(c) *Special concession* is defined as in § 63.14(b) of this part.

(d) *Foreign carrier* is defined as any entity that is authorized within a foreign country to engage in the provision of international telecommunications services offered to the public in that country within the meaning of the

International Telecommunication Regulations, see Final Acts of the World Administrative Telegraph and Telephone Conference, Melbourne, 1988 (WATTC–88), Art. 1, which includes entities authorized to engage in the provision of domestic telecommunications services if such carriers have the ability to originate or terminate telecommunications services to or from points outside their country.

(e) Two entities are *affiliated* with each other if one of them, or an entity that controls one of them, directly or indirectly owns more than 25 percent of the capital stock of, or controls, the other one.

Also, a U.S. carrier is *affiliated* with two or more foreign carriers if the foreign carriers, or entities that control them, together directly or indirectly own more than 25 percent of the capital stock of, or control, the U.S. carrier and those foreign carriers are parties to, or the beneficiaries of, a contractual relation (e.g., a joint venture or market alliance) affecting the provision or marketing of international basic telecommunications services in the United States.

(f) *Market power* means sufficient market power to affect competition adversely in the U.S. market.

(g) As used in this part, the term:

(1) *Interlocking directorates* shall mean persons or entities who perform the duties of ''officer or director'' in an authorized U.S. international carrier or an applicant for international Section 214 authorization who also performs such duties for any foreign carrier.

(2) *Officer or director* shall include the duties, or any of the duties, ordinarily performed by a director, president, vice president, secretary, treasurer, or other officer of a carrier.

NOTE 1: The assessment of ''capital stock'' ownership will be made under the standards developed in Commission case law for determining such ownership. See, e.g., Fox Television Stations, Inc., 10 FCC Rcd 8452 (1995). ''Capital stock'' includes all forms of equity ownership, including partnership interests.

NOTE 2: Ownership and other interests in U.S. and foreign carriers will be attributed to their holders and deemed cognizable pursuant to the following criteria: Attribution of ownership interests in a carrier that are held indirectly by any party through one or more intervening corporations will be determined by successive multiplication of the ownership percentages for each link in the vertical ownership chain and application of the relevant attribution benchmark to the resulting product, except that wherever the ownership percentage for any link in the chain that is equal to or exceeds 50 percent or represents actual control, it shall be treated as if it were a 100 percent interest. For example, if A owns 30 percent of company X, which owns 60 percent of company Y, which owns 26 percent of ''carrier,''' then X's interest in ''carrier''' would be 26 percent (the same as Y's interest because X's interest in Y exceeds 50 percent), and A's interest in ''carrier''' would be 7.8 percent (0.30×0.26 because A's interest in X is less than 50 percent). Under the 25 percent attribution benchmark, X's interest in ''carrier''' would be cognizable, while A's interest would not be cognizable.

[64 FR 19062, Apr. 19, 1999, as amended at 65 FR 60116, Oct. 10, 2000; 67 FR 45390, July 9, 2002]

§ 63.10 Regulatory classification of U.S. international carriers.

(a) Unless otherwise determined by the Commission, any party authorized to provide an international communications service under this part shall be classified as either dominant or non-dominant for the provision of particular international communications services on particular routes as set forth in this section. The rules set forth in this section shall also apply to determinations of regulatory status pursuant to §§ 63.11 and 63.13. For purposes of paragraphs (a)(2) and (a)(3) of this section, the relevant markets on the foreign end of a U.S. international route include: international transport facilities or services, including cable landing station access and backhaul facilities; inter-city facilities or services; and local access facilities or services on the foreign end of a particular route.

(1) A U.S. carrier that has no affiliation with, and that itself is not, a foreign carrier in a particular country to which it provides service (i.e., a destination country) shall presumptively be considered non-dominant for the provision of international communications services on that route;

(2) Except as provided in paragraph (a)(4) of this section, a U.S. carrier that is, or that has or acquires an affiliation

with a foreign carrier that is a monopoly provider of communications services in a relevant market in a destination country shall presumptively be classified as dominant for the provision of international communications services on that route; and

(3) A U.S. carrier that is, or that has or acquires an affiliation with a foreign carrier that is not a monopoly provider of communications services in a relevant market in a destination country and that seeks to be regulated as non-dominant on that route bears the burden of submitting information to the Commission sufficient to demonstrate that its foreign affiliate lacks sufficient market power on the foreign end of the route to affect competition adversely in the U.S. market. If the U.S. carrier demonstrates that the foreign affiliate lacks 50 percent market share in the international transport and the local access markets on the foreign end of the route, the U.S. carrier shall presumptively be classified as non-dominant.

(4) A carrier that is authorized under this part to provide to a particular destination an international switched service, and that provides such service solely through the resale of an unaffiliated U.S. facilities-based carrier's international switched services (either directly or indirectly through the resale of another U.S. resale carrier's international switched services), shall presumptively be classified as non-dominant for the provision of the authorized service. A carrier regulated as non-dominant pursuant to this subparagraph shall notify the Commission at any time that it begins to provide such service through the resale of an affiliated U.S. facilities-based carrier's international switched services. The carrier will be deemed a dominant carrier on the route absent a Commission finding that the carrier otherwise qualifies for non-dominant regulation pursuant to this section.

(b) Any party that seeks to defeat the presumptions in paragraph (a) of this section shall bear the burden of proof upon any issue it raises as to the proper classification of the U.S. carrier.

(c) Any carrier classified as dominant for the provision of particular services on particular routes under this section shall comply with the following requirements in its provision of such services on each such route:

(1) Provide services as an entity that is separate from its foreign carrier affiliate, in compliance with the following requirements:

(i) The authorized carrier shall maintain separate books of account from its affiliated foreign carrier. These separate books of account do not need to comply with part 32 of this chapter; and

(ii) The authorized carrier shall not jointly own transmission or switching facilities with its affiliated foreign carrier. Nothing in this section prohibits the U.S. carrier from sharing personnel or other resources or assets with its foreign affiliate;

(2) File quarterly reports on traffic and revenue within 90 days from the end of each calendar quarter consistent with the format set out by the § 43.62 filing manual.

(3) File quarterly reports summarizing the provisioning and maintenance of all basic network facilities and services procured from its foreign carrier affiliate or from an allied foreign carrier, including, but not limited to, those it procures on behalf of customers of any joint venture for the provision of U.S. basic or enhanced services in which the authorized carrier and the foreign carrier participate, within 90 days from the end of each calendar quarter. These reports should contain the following: the types of circuits and services provided; the average time intervals between order and delivery; the number of outages and intervals between fault report and service restoration; and for circuits used to provide international switched service, the percentage of ''peak hour'' calls that failed to complete;

(4) In the case of an authorized facilities-based carrier, file quarterly, within 90 days from the end of each calendar quarter, a report of its active and idle 64 kbps or equivalent circuits by facility (terrestrial, satellite and submarine cable).

(5) If authorized to provide facilities-based service, comply with paragraph (e) of this section.

(d) A carrier classified as dominant under this section shall file an original and two copies of each report required by paragraphs (c)(3), (c)(4), and (c)(5) of this section with the Chief, International Bureau. The carrier shall also file one copy of these reports with the Commission's copy contractor. The transmittal letter accompanying each report shall clearly identify the report as responsive to the appropriate paragraph of § 63.10(c).

(e) Except as otherwise ordered by the Commission, a carrier that is classified as dominant under this section for the provision of facilities-based services on a particular route and that is affiliated with a carrier that collects settlement payments for terminating U.S. international switched traffic at the foreign end of that route may not provide switched facilities-based service on that route unless the current rates the affiliate charges U.S. international carriers to terminate traffic are at or below the Commission's relevant benchmark adopted in IB Docket No. 96–261. See FCC 97–280 (rel. Aug. 18, 1997) (available at the FCC's Reference Operations Division, Washington, D.C. 20554, and on the FCC's World Wide Web Site at *http://www.fcc.gov*).

[62 FR 64752, Dec. 9, 1997, as amended at 64 FR 19062, Apr. 19, 1999; 64 FR 46593, Aug. 26, 1999; 64 FR 47702, Sept. 1, 1999; 66 FR 16881, Mar. 28, 2001; 67 FR 45390, July 9, 2002; 78 FR 15623, Mar. 12, 2013]

EFFECTIVE DATE NOTE: At 78 FR 15623, Mar. 12, 2013, § 63.10 was amended by revising paragraphs (c)(2) and (c)(4). These paragraphs contain information collection and recordkeeping requirements and will not become effective until approval has been given by the Office of Management and Budget.

§ 63.11 Notification by and prior approval for U.S. international carriers that are or propose to become affiliated with a foreign carrier.

If a carrier is authorized by the Commission (''authorized carrier'') to provide service between the United States and a particular foreign destination market and it becomes, or seeks to become, affiliated with a foreign carrier that is authorized to operate in that market, then its authorization to provide that international service is conditioned upon notifying the Commission of that affiliation.

(a) *Affiliations requiring prior notification.* Except as provided in paragraph (b) of this section, the authorized carrier must notify the Commission, pursuant to this section, forty-five days before consummation of either of the following types of transactions:

(1) Acquisition by the authorized carrier, or by any entity that controls the authorized carrier, or by any entity that directly or indirectly owns more than twenty-five percent of the capital stock of the authorized carrier, of a controlling interest in a foreign carrier that is authorized to operate in a market that the carrier is authorized to serve; or

(2) Acquisition of a direct or indirect interest greater than twenty-five percent, or of a controlling interest, in the capital stock of the authorized carrier by a foreign carrier that is authorized to operate in a market that the authorized carrier is authorized to serve, or by an entity that controls such a foreign carrier.

(b) *Exceptions.* (1) Notwithstanding paragraph (a) of this section, the notification required by this section need not be filed before consummation, and may instead be filed pursuant to paragraph (c) of this section, if either of the following is true with respect to the named foreign carrier regardless of whether that foreign carrier is authorized to operate in a World Trade Organization (WTO) or non-WTO Member:

(i) The Commission has previously determined in an adjudication that the foreign carrier lacks market power in that destination market (for example, in an international section 214 application or a declaratory ruling proceeding); or

(ii) The foreign carrier owns no facilities in that destination market. For this purpose, a carrier is said to own facilities if it holds an ownership, indefeasible-right-of-user, or leasehold interest in bare capacity in international or domestic telecommunications facilities (excluding switches).

(2) In the event paragraph (b)(1) of this section cannot be satisfied, notwithstanding paragraph (a) of this section, the notification required by this section need not be filed before consummation, and may instead be filed

pursuant to paragraph (c) of this section, if the authorized carrier certifies that the named foreign carrier is authorized to operate in a WTO Member and provides certification to satisfy either of the following:

(i) The authorized carrier demonstrates that it is entitled to retain non-dominant classification on its newly affiliated route pursuant to § 63.10; or

(ii) The authorized carrier agrees to comply with the dominant carrier safeguards contained in § 63.10 effective upon the acquisition of the affiliation. See § 63.10.

(c) *Notification after consummation.* Any authorized carrier that becomes affiliated with a foreign carrier and has not previously notified the Commission pursuant to this section shall notify the Commission within thirty days after consummation of the acquisition.

Example 1 to paragraph (c). Acquisition by an authorized carrier (or by any entity that directly or indirectly controls, is controlled by, or is under direct or indirect common control with the authorized carrier) of a direct or indirect interest in a foreign carrier that is greater than twenty-five percent but not controlling is subject to paragraph (c) but not to paragraph (a).

Example 2 to paragraph (c). Notification of an acquisition by an authorized carrier of a hundred percent interest in a foreign carrier may be made after consummation, pursuant to paragraph (c), if the foreign carrier operates only as a resale carrier.

Example 3 to paragraph (c). Notification of an acquisition by a foreign carrier from a WTO Member of a greater than twenty-five percent interest in the capital stock of an authorized carrier may be made after consummation, pursuant to paragraph (c) of this section, if the authorized carrier demonstrates in the post-notification that it qualifies for non-dominant classification on the affiliated route or agrees to comply with dominant carrier safeguards on the affiliated route effective upon the acquisition of the affiliation.

(d) *Cross-reference*: In the event a transaction requiring a foreign carrier notification pursuant to this section also requires a transfer of control of assignment application pursuant to § 63.24, the foreign carrier notification shall reference in the notification the transfer of control of assignment application and the date of its filing.

(e) *Contents of notification.* The notification shall certify the following information:

(1) The name of the newly affiliated foreign carrier and the country or countries in which it is authorized to provide telecommunications services to the public;

(2) Which, if any, of those countries is a Member of the World Trade Organization;

(3) What services the authorized carrier is authorized to provide to each named country, and the FCC file numbers under which each such authorization was granted;

(4) Which, if any, of those countries the authorized carrier serves solely through the resale of the international switched services of unaffiliated U.S. facilities-based carriers;

(5) The name, address, citizenship, and principal business of any person or entity that directly or indirectly owns at least ten (10) percent of the equity of the authorized carrier, and the percentage of equity owned by each of those entities (to the nearest one percent);

(6) A certification that the authorized carrier has not agreed to and will not in the future agree to accept special concessions directly or indirectly from any foreign carrier with respect to any U.S. international route where the foreign carrier possesses market power on the foreign end of the route; and

(7) *Interlocking directorates.* The name of any interlocking directorates, as defined in § 63.09(g), with each foreign carrier named in the notification. See § 63.09(g).

(8) With respect to each foreign carrier named in the notification, a statement as to whether the notification is subject to paragraph (a) or (c) of this section. In the case of a notification subject to paragraph (a) of this section, the authorized carrier shall include the projected date of closing. In the case of a notification subject to paragraph (c) of this section, the authorized carrier shall include the actual date of closing.

(9) If an authorized carrier relies on an exception in paragraph (b) of this section, then a certification as to which exception the foreign carrier satisfies and a citation to any adjudication upon which the carrier is relying.

Authorized carriers relying upon the exceptions in paragraph (b)(2) of this section must make the required certified demonstration in paragraph (b)(2)(i) of this section or the certified commitment to comply with dominant carrier safeguards in paragraph (b)(2)(ii) of this section in the notification required by paragraph (c) of this section.

(f) In order to retain non-dominant status on each newly affiliated route, the authorized carrier should demonstrate that it qualifies for non-dominant classification pursuant to §63.10. See §63.10.

(g) *Procedure*. After the Commission issues a public notice of the submissions made under this section, interested parties may file comments within fourteen days of the public notice.

(1) If the Commission deems it necessary at any time before or after the deadline for submission of public comments, the Commission may impose dominant carrier regulation on the authorized carrier for the affiliated routes based on the provisions of §63.10. See §63.10.

(2) In the case of a prior notification filed pursuant to paragraph (a) of this section, the U.S. authorized carrier must demonstrate that it continues to serve the public interest for it to operate on the route for which it proposes to acquire an affiliation with the foreign carrier authorized to operate in the non-WTO Member country. Such a showing shall include a demonstration as to whether the foreign carrier lacks market power in the non-WTO Member country with reference to the criteria in §63.10(a) of this chapter. If the U.S. authorized carrier is unable to make the required showing in §63.10(a) of this chapter, the U.S. authorized carrier shall agree to comply with the dominant carrier safeguards contained in §63.10(c) of this chapter, effective upon the acquisition of the affiliation. If the U.S. authorized carrier is notified by the Commission that the affiliation may otherwise harm the public interest pursuant to the Commission's policies and rules, then the Commission may impose conditions necessary to address any public interest harms or may proceed to an immediate authorization revocation hearing.

NOTE TO PARAGRAPH (g)(2): Under §63.10(a) of this chapter, the Commission presumes, subject to rebuttal, that a foreign carrier lacks market power in a particular foreign country if the applicant demonstrates that the foreign carrier lacks 50 percent market share in international transport facilities or services, including cable landing station access and backhaul facilities, intercity facilities or services, and local access facilities or services on the foreign end of a particular route.

(h) All authorized carriers are responsible for the continuing accuracy of information provided pursuant to this section for a period of forty-five (45) days after filing. During this period if the information furnished is no longer accurate, the authorized carrier shall as promptly as possible, and in any event within ten (10) days, unless good cause is shown, file with the Commission a corrected notification referencing the FCC file numbers under which the original notification was provided, except that the carrier shall immediately inform the Commission, if at any time, not limited to the forty-five (45) days, the representations in the ''special concessions'' certification provided under paragraph (e)(6) of this section or §63.18(n) are no longer true. *See* §63.18(n).

(i) A carrier that files a prior notification pursuant to paragraph (a) of this section may request confidential treatment of its filing, pursuant to §0.459 of this chapter, for the first twenty (20) days after filing.

(j) Subject to the availability of electronic forms, notifications described in this section must be filed electronically through the International Bureau Filing System (IBFS). A list of forms that are available for electronic filing can be found on the IBFS homepage. For information on electronic filing requirements, see part 1, §§1.1000 through 1.10018 of this chapter and the IBFS homepage at *http://www.fcc.gov/ibfs*. See also §§63.20 and 63.53.

[65 FR 60116, Oct. 10, 2000, as amended at 68 FR 50973, Aug. 25, 2003; 69 FR 29901, May 26, 2004; 70 FR 38798, July 6, 2005;79 FR 31877, June 3, 2014]

EFFECTIVE DATE NOTE: At 79 FR 31877, June 3, 2014, § 63.11 was amended by revising paragraph (g)(2). This paragraph contains information collection and recordkeeping requirements and will not become effective until approval has been given by the Office of Management and Budget.

§ 63.12 Processing of international Section 214 applications.

(a) Except as provided by paragraph (c) of this section, a complete application seeking authorization under § 63.18 of this part shall be granted by the Commission 14 days after the date of public notice listing the application as accepted for filing.

(b) The applicant may commence operation on the 15th day after the date of public notice listing the application as accepted for filing, but only in accordance with the operations proposed in its application and the rules, regulations, and policies of the Commission. The public notice of the grant of the authorization shall represent the applicant's Section 214 certificate.

(c) The streamlined processing procedures provided by paragraphs (a) and (b) of this section shall not apply where:

(1) The applicant is affiliated with a foreign carrier in a destination market, unless the applicant clearly demonstrates in its application at least one of the following:

(i) The Commission has previously determined that the affiliated foreign carrier lacks market power in that destination market;

(ii) The applicant qualifies for a presumption of non-dominance under § 63.10(a)(3);

(iii) The affiliated foreign carrier owns no facilities, or only mobile wireless facilities, in that destination market. For this purpose, a carrier is said to own facilities if it holds an ownership, indefeasible-right-of-user, or leasehold interest in bare capacity in international or domestic telecommunications facilities (excluding switches);

(iv) The affiliated destination market is a WTO Member country and the applicant qualifies for a presumption of non-dominance under § 63.10(a)(4)of this part;

(v) The affiliated destination market is a WTO Member country and the applicant agrees to be classified as a dominant carrier to the affiliated destination country under § 63.10, without prejudice to its right to petition for reclassification at a later date; or

(vi) An entity with exactly the same ultimate ownership as the applicant has been authorized to provide the applied-for services on the affiliated destination route, and the applicant agrees to be subject to all of the conditions to which the authorized carrier is subject for its provision of service on that route; or

(2) The applicant has an affiliation with a dominant U.S. carrier whose international switched or private line services the applicant seeks authority to resell (either directly or indirectly through the resale of another reseller's services), unless the applicant agrees to be classified as a dominant carrier to the affiliated destination country under § 63.10 (without prejudice to its right to petition for reclassification at a later date); or

(3) The Commission has informed the applicant in writing, within 14 days after the date of public notice listing the application as accepted for filing, that the application is not eligible for streamlined processing.

(d) If an application is deemed complete but, pursuant to paragraph (c) of this section, is deemed ineligible for the streamlined processing procedures provided by paragraphs (a) and (b) of this section, the Commission will issue public notice indicating that the application is ineligible for streamlined processing. Within 90 days of the public notice, the Commission will take action upon the application or provide public notice that, because the application raises questions of extraordinary complexity, an additional 90-day period for review is needed. Each successive 90-day period may be so extended. The application shall not be deemed granted until the Commission affirmatively acts upon the application. Operation for which such authorization is sought may not commence except in accordance with any terms or conditions imposed by the Commission.

[62 FR 64753, Dec. 9, 1997, as amended at 64 FR 19063, Apr. 19, 1999; 64 FR 22903, Apr. 28, 1999; 64 FR 43095, Aug. 9, 1999; 69 FR 23154, Apr. 28, 2004]

§ 63.13 Procedures for modifying regulatory classification of U.S. international carriers from dominant to non-dominant.

Any party that desires to modify its regulatory status from dominant to non-dominant for the provision of particular international communications services on a particular route should provide information in its application to demonstrate that it qualifies for non-dominant classification pursuant to § 63.10.

[62 FR 64754, Dec. 9, 1997]

§ 63.14 Prohibition on agreeing to accept special concessions.

(a) Any carrier authorized to provide international communications service under this part shall be prohibited, except as provided in paragraph (c) of this section, from agreeing to accept special concessions directly or indirectly from any foreign carrier with respect to any U.S. international route where the foreign carrier possesses sufficient market power on the foreign end of the route to affect competition adversely in the U.S. market and from agreeing to accept special concessions in the future.

NOTE TO PARAGRAPH (a): Carriers may rely on the Commission's list of foreign carriers that do not qualify for the presumption that they lack market power in particular foreign points for purposes of determining which foreign carriers are the subject of the prohibitions contained in this section. The Commission's list of foreign carriers that do not qualify for the presumption that they lack market power is available from the International Bureau's World Wide Web site at *http://www.fcc.gov/ib*.

(b) A special concession is defined as an exclusive arrangement involving services, facilities, or functions on the foreign end of a U.S. international route that are necessary for the provision of basic telecommunications services where the arrangement is not offered to similarly situated U.S.-licensed carriers and involves:

(1) Operating agreements for the provision of basic services;

(2) Distribution arrangements or interconnection arrangements, including pricing, technical specifications, functional capabilities, or other quality and operational characteristics, such as provisioning and maintenance times; or

(3) Any information, prior to public disclosure, about a foreign carrier's basic network services that affects either the provision of basic or enhanced services or interconnection to the foreign country's domestic network by U.S. carriers or their U.S. customers.

(c) This section shall not apply to the rates, terms and conditions in an agreement between a U.S. carrier and a foreign carrier that govern the settlement of U.S. international traffic, including the method for allocating return traffic.

[62 FR 64754, Dec. 9, 1997, as amended at 64 FR 19063, Apr. 19, 1999; 64 FR 34741, June 29, 1999; 66 FR 16881, Mar. 28, 2001; 69 FR 23154, Apr. 28, 2004; 78 FR 11112, Feb. 15, 2013]

§ 63.17 Special provisions for U.S. international common carriers.

(a) Unless otherwise prohibited by the terms of its Section 214 certificate, a U.S. common carrier authorized under this part to provide international private line service, whether as a reseller or facilities-based carrier, may interconnect its authorized private lines to the public switched network on behalf of an end user customer for the end user customer's own use.

(b) Except as provided in paragraph (b)(4) of this section, a U.S. common carrier, whether a reseller or facilities-based carrier, may engage in ''switched hubbing'' to countries provided the carrier complies with the following conditions:

(1) U.S.-outbound switched traffic shall be routed over the carrier's authorized U.S. international circuits extending between the United States and a country that is exempt from the international settlements policy (*i.e.*, the ''hub'' country), and then forwarded to the third country only by taking at published rates and reselling the international message telephone service (IMTS) of a carrier in the hub country;

(2) U.S.-inbound switched traffic shall be carried to a country that is exempt from the international settlements policy (*i.e.*, the ''hub'' country) as part of the IMTS traffic flow from a third country and then terminated in

the United States over the carrier's authorized U.S. international circuits extending between the United States and the hub country.

NOTE TO PARAGRAPH (b): The Commission's list of international routes exempted from the international settlements policy is available on the International Bureau's World Wide Web site at *http://www.fcc.gov/ib*.

(3) Authorized carriers filing tariffs pursuant to §§ 61.19 or 61.28 of this chapter that route U.S.-billed traffic via switched hubbing shall tariff their service on a ''through'' basis between the United States and the ultimate point of origination or termination;

(4) No U.S. common carrier may engage in switched hubbing to or from a third country where it has an affiliation with a foreign carrier unless and until it has received authority to serve that country under § 63.18(e)(1), (e)(2), or (e)(3).

[60 FR 67339, Dec. 29, 1995, as amended at 61 FR 15728, Apr. 9, 1996; 63 FR 64754, Dec. 9, 1997; 64 FR 19064, Apr. 19, 1999; 66 FR 16881, Mar. 28, 2001; 67 FR 45390, July 9, 2002; 69 FR 23154, Apr. 28, 2004; 78 FR 11112, Feb. 15, 2013]

§ 63.18 Contents of applications for international common carriers.

Except as otherwise provided in this part, any party seeking authority pursuant to Section 214 of the Communications Act of 1934, as amended, to construct a new line, or acquire or operate any line, or engage in transmission over or by means of such additional line for the provision of common carrier communications services between the United States, its territories or possessions, and a foreign point shall request such authority by formal application. The application shall include information demonstrating how the grant of the application will serve the public interest, convenience, and necessity. Such demonstration shall consist of the following information, as applicable:

(a) The name, address, and telephone number of each applicant;

(b) The Government, State, or Territory under the laws of which each corporate or partnership applicant is organized;

(c) The name, title, post office address, and telephone number of the officer and any other contact point, such as legal counsel, to whom correspondence concerning the application is to be addressed;

(d) A statement as to whether the applicant has previously received authority under Section 214 of the Act and, if so, a general description of the categories of facilities and services authorized (i.e., authorized to provide international switched services on a facilities basis);

(e) One or more of the following statements, as pertinent:

(1) *Global facilities-based authority*. If applying for authority to become a facilities-based international common carrier subject to § 63.22 of this part, the applicant shall:

(i) State that it is requesting Section 214 authority to operate as a facilities-based carrier pursuant to § 63.18(e)(1) of this part of the Commission's rules;

(ii) List any countries for which the applicant does not request authorization under this paragraph (see § 63.22(a) of this part); and

(iii) Certify that it will comply with the terms and conditions contained in §§ 63.21 and 63.22 of this part.

(2) *Global Resale Authority*. If applying for authority to resell the international services of authorized common carriers subject to § 63.23, the applicant shall:

(i) State that it is requesting Section 214 authority to operate as a resale carrier pursuant to § 63.18(e)(2) of this section of the Commission's rules;

(ii) List any countries for which the applicant does not request authorization under this paragraph (see § 63.23(a) of this part); and

(iii) Certify that it will comply with the terms and conditions contained in §§ 63.21 and 63.23 of this part.

(3) *Other authorizations*. If applying for authority to acquire facilities or to provide services not covered by paragraphs (e)(1) and (e)(2) of this section, the applicant shall provide a description of the facilities and services for which it seeks authorization. The applicant shall certify that it will comply with the terms and conditions contained in §§ 63.21 and 63.22 and/or 63.23, as appropriate. Such description also

shall include any additional information the Commission shall have specified previously in an order, public notice or other official action as necessary for authorization.

(f) Applicants may apply for any or all of the authority provided for in paragraph (e) of this section in the same application. The applicant may want to file separate applications for those services not subject to streamlined processing under §63.12.

(g) Where the applicant is seeking facilities-based authority under paragraph (e)(3) of this section, a statement whether an authorization of the facilities is categorically excluded as defined by §1.1306 of this chapter. If answered affirmatively, an environmental assessment as described in §1.1311 of this chapter need not be filed with the application.

(h) The name, address, citizenship and principal businesses of any person or entity that directly or indirectly owns at least ten percent of the equity of the applicant, and the percentage of equity owned by each of those entities (to the nearest one percent). The applicant shall also identify any interlocking directorates with a foreign carrier.

NOTE TO PARAGRAPH (h): Ownership and other interests in U.S. and foreign carriers will be attributed to their holders and deemed cognizable pursuant to the following criteria: Attribution of ownership interests in a carrier that are held indirectly by any party through one or more intervening corporations will be determined by successive multiplication of the ownership percentages for each link in the vertical ownership chain and application of the relevant attribution benchmark to the resulting product, except that wherever the ownership percentage for any link in the chain that is equal to or exceeds 50 percent or represents actual control, it shall be treated as if it were a 100 percent interest. For example, if A owns 30 percent of company X, which owns 60 percent of company Y, which owns 26 percent of ''carrier,'' then X's interest in ''carrier'' would be 26 percent (the same as Y's interest because X's interest in Y exceeds 50 percent), and A's interest in ''carrier'' would be 7.8 percent (0.30×0.26 because A's interest in X is less than 50 percent). Under the 25 percent attribution benchmark, X's interest in ''carrier'' would be cognizable, while A's interest would not be cognizable.

(i) A certification as to whether or not the applicant is, or is affiliated with, a foreign carrier. The certification shall state with specificity each foreign country in which the applicant is, or is affiliated with, a foreign carrier.

(j) A certification as to whether or not the applicant seeks to provide international telecommunications services to any destination country for which any of the following is true. The certification shall state with specificity the foreign carriers and destination countries:

(1) The applicant is a foreign carrier in that country; or

(2) The applicant controls a foreign carrier in that country; or

(3) Any entity that owns more than 25 percent of the applicant, or that controls the applicant, controls a foreign carrier in that country.

(4) Two or more foreign carriers (or parties that control foreign carriers) own, in the aggregate, more than 25 percent of the applicant and are parties to, or the beneficiaries of, a contractual relation (e.g., a joint venture or market alliance) affecting the provision or marketing of international basic telecommunications services in the United States.

(k) For any country that the applicant has listed in response to paragraph (j) of this section that is not a member of the World Trade Organization, the applicant shall make a demonstration as to whether the foreign carrier has market power, or lacks market power, with reference to the criteria in §63.10(a) of this chapter.

(1) The named foreign country (i.e., the destination foreign country) is a Member of the World Trade Organization; or

(2) The applicant's affiliated foreign carrier lacks market power in the named foreign country; or

(3) The named foreign country provides effective competitive opportunities to U.S. carriers to compete in that country's market for the service that the applicant seeks to provide (facilities-based, resold switched, or resold non-interconnected private line services). An effective competitive opportunities demonstration should address the following factors:

(i) If the applicant seeks to provide facilities-based international services, the legal ability of U.S. carriers to enter the foreign market and provide facilities-based international services, in particular international message telephone service (IMTS);

(ii) If the applicant seeks to provide resold services, the legal ability of U.S. carriers to enter the foreign market and provide resold international switched services (for switched resale applications) or non-interconnected private line services (for non-interconnected private line resale applications);

(iii) Whether there exist reasonable and nondiscriminatory charges, terms and conditions for interconnection to a foreign carrier's domestic facilities for termination and origination of international services or the provision of the relevant resale service;

(iv) Whether competitive safeguards exist in the foreign country to protect against anticompetitive practices, including safeguards such as:

(A) Existence of cost-allocation rules in the foreign country to prevent cross-subsidization;

(B) Timely and nondiscriminatory disclosure of technical information needed to use, or interconnect with, carriers' facilities; and

(C) Protection of carrier and customer proprietary information;

(v) Whether there is an effective regulatory framework in the foreign country to develop, implement and enforce legal requirements, interconnection arrangements and other safeguards; and

(vi) Any other factors the applicant deems relevant to its demonstration.

NOTE TO PARAGRAPH (K): Under § 63.10(a), the Commission presumes, subject to rebuttal, that a foreign country lacks market power in a particular foreign country if the applicant demonstrates that the foreign carrier lacks 50 percent market share in international transport facilities or services, including cable landing station access and backhaul facilities, intercity facilities or services, and local access facilities or services on the foreign end of a particular route.

(l) [Reserved]

(m) With respect to regulatory classification under § 63.10 of this part, any applicant that is or is affiliated with a foreign carrier in a country listed in response to paragraph (i) of this section and that desires to be regulated as non-dominant for the provision of particular international telecommunications services to that country should provide information in its application to demonstrate that it qualifies for non-dominant classification pursuant to § 63.10 of this part.

(n) A certification that the applicant has not agreed to accept special concessions directly or indirectly from any foreign carrier with respect to any U.S. international route where the foreign carrier possesses market power on the foreign end of the route and will not enter into such agreements in the future.

(o) A certification pursuant to §§ 1.2001 through 1.2003 of this chapter that no party to the application is subject to a denial of Federal benefits pursuant to Section 5301 of the Anti-Drug Abuse Act of 1988. *See* 21 U.S.C. 853a.

(p) If the applicant desires streamlined processing pursuant to § 63.12, a statement of how the application qualifies for streamlined processing.

(q) Any other information that may be necessary to enable the Commission to act on the application.

(r) Subject to the availability of electronic forms, all applications described in this section must be filed electronically through the International Bureau Filing System (IBFS). A list of forms that are available for electronic filing can be found on the IBFS homepage. For information on electronic filing requirements, see part 1, §§ 1.1000 through 1.10018 of this chapter and the IBFS homepage at *http://www.fcc.gov/ibfs*. See also §§ 63.20 and 63.53.

[61 FR 15729, Apr. 9, 1996, as amended at 62 FR 32965, June 17, 1997; 62 FR 45762, Aug. 29, 1997; 62 FR 64755, Dec. 9, 1997; 63 FR 24121, May 1, 1998; 64 FR 19064, Apr. 19, 1999; 65 FR 60117, Oct. 10, 2000; 67 FR 45390, July 9, 2002; 69 FR 29902, May 26, 2004; 70 FR 38798, July 6, 2005; 72 FR 54366, Sept. 25, 2007; 78 FR 15623, Mar. 12, 2013; 79 FR 31877, June 3, 2014]

EFFECTIVE DATE NOTE: At 79 FR 31877, June 3, 2014, § 63.18 was amended by revising paragraph (k) introductory text and adding a note to paragraph (k), these paragraphs contain information collection and recordkeeping requirements and will not become effective until approval has been given by the Office of Management and Budget.

§ 63.19 Special procedures for discontinuances of international services.

(a) With the exception of those international carriers described in paragraphs (b) and (c) of this section, any international carrier that seeks to discontinue, reduce or impair service, including the retiring of international facilities, dismantling or removing of international trunk lines, shall be subject to the following procedures in lieu of those specified in §§ 63.61 through 63.601:

(1) The carrier shall notify all affected customers of the planned discontinuance, reduction or impairment at least 30 days prior to its planned action. Notice shall be in writing to each affected customer unless the Commission authorizes in advance, for good cause shown, another form of notice.

(2) The carrier shall file with this Commission a copy of the notification on the date on which notice has been given to all affected customers. The filing may be made by letter (sending an original and five copies to the Office of the Secretary, and a copy to the Chief, International Bureau) and shall identify the geographic areas of the planned discontinuance, reduction or impairment and the authorization(s) pursuant to which the carrier provides service.

(b) The following procedures shall apply to any international carrier that the Commission has classified as dominant in the provision of a particular international service because the carrier possesses market power in the provision of that service on the U.S. end of the route. Any such carrier that seeks to retire international facilities, dismantle or remove international trunk lines, but does not discontinue, reduce or impair the dominant services being provided through these facilities, shall only be subject to the notification requirements of paragraph (a) of this section. If such carrier discontinues, reduces or impairs the dominant service, or retires facilities that impair or reduce the service, the carrier shall file an application pursuant to §§ 63.62 and 63.500.

(c) Commercial Mobile Radio Service (CMRS) carriers, as defined in § 20.9 of this chapter, are not subject to the provisions of this section.

(d) Subject to the availability of electronic forms, all filings described in this section must be filed electronically through the International Bureau Filing System (IBFS). A list of forms that are available for electronic filing can be found on the IBFS homepage. For information on electronic filing requirements, see part 1, §§ 1.1000 through 1.10018 of this chapter and the IBFS homepage at *http://www.fcc.gov/ibfs*. See also §§ 63.20 and 63.53.

[67 FR 45391, July 9, 2002, as amended at 70 FR 38798, July 6, 2005; 72 FR 54366, Sept. 25, 2007]

§ 63.20 Electronic filing, copies required; fees; and filing periods for international service providers.

(a) Subject to the availability of electronic forms, all filings described in this section must be filed electronically through the International Bureau Filing System (IBFS). A list of forms that are available for electronic filing can be found on the IBFS homepage. For information on electronic filing requirements, see part 1, §§ 1.1000 through 1.10018 of this chapter and the IBFS homepage at *http://www.fcc.gov/ibfs*. Each application shall be accompanied by the fee prescribed in subpart G of part 1 of this chapter. For applications filed electronically it is not necessary to send the original or any copies with the fee payment. For applications and other filings that are not submitted electronically, an original and five (5) copies of the submission must be filed with the Commission. Upon request by the Commission, additional copies shall be furnished.

(b) No application accepted for filing and subject to the provisions of §§ 63.18, 63.62 or 63.505 of this part shall be granted by the Commission earlier than 28 days following issuance of public notice by the Commission of the acceptance for filing of such application or any major amendment unless said public notice specifies another time period, or the application qualifies for streamlined processing pursuant to § 63.12 of this part.

(c) No application accepted for filing and subject to the streamlined processing provisions of § 63.12 of this part

shall be granted by the Commission earlier than 14 days following issuance of public notice by the Commission of the acceptance for filing of such application or any major amendment unless said public notice specifies another time period.

(d) Any interested party may file a petition to deny an application within the time period specified in the public notice listing an application as accepted for filing and ineligible for streamlined processing. The petitioner shall serve a copy of such petition on the applicant no later than the date of filing thereof with the Commission. The petition shall contain specific allegations of fact sufficient to show that the petitioner is a party in interest and that a grant of the application would be prima facie inconsistent with the public interest, convenience and necessity. Such allegations of fact shall, except for those of which official notice may be taken, be supported by affidavit of a person or persons with personal knowledge thereof. The applicant may file an opposition to any petition to deny within 14 days after the original pleading is filed. The petitioner may file a reply to such opposition within seven days after the time for filing oppositions has expired. Allegations of facts or denials thereof shall similarly be supported by affidavit. These responsive pleadings shall be served on the applicant or petitioner, as appropriate, and other parties to the proceeding.

[61 FR 15732, Apr. 9, 1996, as amended at 64 FR 19065, Apr. 19, 1999; 67 FR 45391, July 9, 2002; 69 FR 29902, May 26, 2004; 70 FR 38798, July 6, 2005]

§ 63.21 Conditions applicable to all international Section 214 authorizations.

International carriers authorized under Section 214 of the Communications Act of 1934, as amended, must follow the following requirements and prohibitions:

(a) Each carrier is responsible for the continuing accuracy of the certifications made in its application. Whenever the substance of any such certification is no longer accurate, the carrier shall as promptly as possible and, in any event, within thirty (30) days, file with the Commission a corrected certification referencing the FCC file number under which the original certification was provided. The information may be used by the Commission to determine whether a change in regulatory status may be warranted under § 63.10. *See also* § 63.11.

(b) Carriers must file copies of operating agreements entered into with their foreign correspondents as specified in § 43.51 of this chapter and shall otherwise comply with the filing requirements contained in that section.

(c) Carriers regulated as dominant for the provision of a particular international communications service on a particular route for any reason other than a foreign carrier affiliation under § 63.10 shall file tariffs pursuant to Section 203 of the Communications Act, 47 U.S.C. 203, and part 61 of this chapter. Except as specified in § 20.15(d) of this chapter with respect to commercial mobile radio service providers, carriers regulated as non-dominant, as defined in § 61.3 of this chapter, and providing detariffed international services pursuant to § 61.19 of this chapter must comply with all applicable public disclosure and maintenance of information requirements in §§ 42.10 and 42.11 of this chapter.

(d) Carriers must file annual international telecommunications traffic and revenue as required by § 43.62 of this chapter.

(e) Authorized carriers may not access or make use of specific U.S. customer proprietary network information that is derived from a foreign network unless the carrier obtains approval from that U.S. customer. In seeking to obtain approval, the carrier must notify the U.S. customer that the customer may require the carrier to disclose the information to unaffiliated third parties upon written request by the customer.

(f) Authorized carriers may not receive from a foreign carrier any proprietary or confidential information pertaining to a competing U.S. carrier, obtained by the foreign carrier in the course of its normal business dealings, unless the competing U.S. carrier provides its permission in writing.

(g) The Commission reserves the right to review a carrier's authorization, and, if warranted, impose additional requirements on U.S. international carriers in circumstances where it appears that harm to competition is occurring on one or more U.S. international routes.

(h) Subject to the requirement of § 63.10 that a carrier regulated as dominant along a route must provide service as an entity that is separate from its foreign carrier affiliate, and subject to any other structural-separation requirement in Commission regulations, an authorized carrier may provide service through any wholly owned direct or indirect subsidiaries. The carrier must, within thirty (30) days after the subsidiary begins providing service, file with the Commission a notification referencing the authorized carrier's name and the FCC file numbers under which the carrier's authorizations were granted and identifying the subsidiary's name and place of legal organization. This provision shall not be construed to authorize the provision of service by any entity barred by statute or regulation from itself holding an authorization or providing service.

(i) An authorized carrier, or a subsidiary operating pursuant to paragraph (h) of this section, that changes its name (including the name under which it is doing business) must notify the Commission within thirty (30) days of the name change. Such notification shall reference the FCC file numbers under which the carrier's authorizations were granted.

(j) Subject to the availability of electronic forms, all notifications and other filings described in this section must be filed electronically through the International Bureau Filing System (IBFS). A list of forms that are available for electronic filing can be found on the IBFS homepage. For information on electronic filing requirements, see part 1, §§ 1.1000 through 1.10018 of this chapter and the IBFS homepage at *http://www.fcc.gov/ibfs*. See also §§ 63.20 and 63.53.

[61 FR 15732, Apr. 9, 1996, as amended at 62 FR 45762, Aug. 29, 1997; 62 FR 64758, Dec. 9, 1997; 64 FR 19065, Apr. 19, 1999; 66 FR 16881, Mar. 28, 2001; 67 FR 45391, July 9, 2002; 67 FR 57344, Sept. 10, 2002; 70 FR 38798, July 6, 2005; 78 FR 15623, Mar. 12, 2013]

EFFECTIVE DATE NOTE: At 78 FR 15623, Mar. 12, 2013, § 63.21 was amended by revising paragraph (d). This paragraph contains information collection and recordkeeping requirements and will not become effective until approval has been given by the Office of Management and Budget.

§ 63.22 Facilities-based international common carriers.

The following conditions apply to authorized facilities-based international carriers:

(a) A carrier authorized under § 63.18(e)(1) may provide international facilities-based services to international points for which it qualifies for non-dominant regulation as set forth in § 63.10, except in the following circumstance: If the carrier is, or is affiliated with, a foreign carrier in a destination market and the Commission has not determined that the foreign carrier lacks market power in the destination market (see § 63.10(a)), the carrier shall not provide service on that route unless it has received specific authority to do so under § 63.18(e)(3).

(b) The carrier may provide service using half-circuits on any U.S. common carrier and non-common carrier facilities that do not appear on an exclusion list published by the Commission. Carriers may also use any necessary non-U.S.-licensed facilities, including any submarine cable systems, that do not appear on the exclusion list. Carriers may not use U.S. earth stations to access non-U.S.-licensed satellite systems unless the Commission has specifically approved the use of those satellites and so indicates on the exclusion list. The exclusion list is available from the International Bureau's World Wide Web site at *http://www.fcc.gov/ib*.

(c) Specific authority under § 63.18(e)(3) is required for the carrier to provide service using any facilities listed on the exclusion list, to provide service between the United States and any country on the exclusion list, or to construct, acquire, or operate lines in any new major common carrier facility project.

(d) The carrier may provide international basic switched, private line, data, television and business services.

(e) The carrier shall file annual international circuit capacity reports as required by § 43.62 of this chapter.

(f) The terms and conditions of any operating or other agreement relating to the exchange of services, interchange or routing of traffic and matters concerning rates, accounting rates, division of tolls, the allocation of return traffic, or the basis of settlement of traffic balances, entered into by U.S. common carriers authorized pursuant to this part to provide facilities-based switched voice service on the U.S.-Cuba route in correspondence with a Cuban carrier that does not qualify for the presumption that it lacks market power in Cuba, shall be identical to the equivalent terms and conditions in the operating agreement of another carrier providing the same or similar service between the United States and Cuba. Carriers may seek waiver of this requirement. *See International Settlements Policy Reform,* Report and Order, IB Docket Nos. 11–80, 05–254, 09–10, RM 11322, FCC 12–145 (rel. November 29, 2012).

(g) A carrier or other party may request Commission intervention on any U.S. international route for which competitive problems are alleged by filing with the International Bureau a petition, pursuant to this section, demonstrating anticompetitive behavior by foreign carriers that is harmful to U.S. customers. The Commission may also act on its own motion. Carriers and other parties filing complaints must support their petitions with evidence, including an affidavit and relevant commercial agreements. The International Bureau will review complaints on a case-by-case basis and take appropriate action on delegated authority pursuant to § 0.261 of this chapter. Interested parties will have 10 days from the date of issuance of a public notice of the petition to file comments or oppositions to such petitions and subsequently 7 days for replies. In the event significant, immediate harm to the public interest is likely to occur that cannot be addressed through *post facto* remedies, the International Bureau may impose temporary requirements on carriers authorized pursuant to § 63.18 of this chapter without prejudice to its findings on such petitions.

(h) The authority granted under this part is subject to all Commission rules and regulations and any conditions or limitations stated in the Commission's public notice or order that serves as the carrier's Section 214 certificate. See §§ 63.12, 63.21 of this part.

NOTE 1 TO § 63.22: For purposes of this section, *foreign carrier* is defined in § 63.09 of this chapter.

NOTE 2 TO § 63.22: For purposes of this section, a *foreign carrier* shall be considered to possess market power if it appears on the Commission's list of foreign carriers that do not qualify for the presumption that they lack market power in particular foreign points. This list is available on the International Bureau's World Wide Web site at *http://www.fcc.gov/ib*. The Commission will include on the list of foreign carriers that do not qualify for the presumption that they lack market power in particular foreign points any foreign carrier that has 50 percent or more market share in the international transport or local access markets of a foreign point. A party that seeks to remove such a carrier from the Commission's list bears the burden of submitting information to the Commission sufficient to demonstrate that the foreign carrier lacks 50 percent market share in the international transport and local access markets on the foreign end of the route or that it nevertheless lacks sufficient market power on the foreign end of the route to affect competition adversely in the U.S. market. A party that seeks to add a carrier to the Commission's list bears the burden of submitting information to the Commission sufficient to demonstrate that the foreign carrier has 50 percent or more market share in the international transport or local access markets on the foreign end of the route or that it nevertheless has sufficient market power to affect competition adversely in the U.S. market.

[64 FR 19065, Apr. 19, 1999, as amended at 64 FR 34741, June 29, 1999; 67 FR 45391, July 9, 2002; 69 FR 23154, Apr. 28, 2004; 78 FR 11112, Feb. 15, 2013; 78 FR 15624, Mar.12, 2013]

EFFECTIVE DATE NOTE: At 78 FR 15624, Mar. 12, 2013, § 63.22 was amended by revising paragraph (c). This paragraph contains information collection and recordkeeping requirements and will not become effective until approval has been given by the Office of Management and Budget.

§ 63.23 Resale-based international common carriers.

The following conditions apply to carriers authorized to resell the international services of other authorized carriers:

(a) A carrier authorized under § 63.18(e)(2) may provide resold international services to international

points for which the applicant qualifies for non-dominant regulation as set forth in § 63.10, except that the carrier may not provide either of the following services unless it has received specific authority to do so under § 63.18(e)(3):

(1) Resold switched services to a non-WTO Member country where the applicant is, or is affiliated with, a foreign carrier; and

(2) Switched or private line services over resold private lines to a destination market where the applicant is, or is affiliated with, a foreign carrier and the Commission has not determined that the foreign carrier lacks market power in the destination market (see § 63.10(a)).

(b) The carrier may not resell the international services of an affiliated carrier regulated as dominant on the route to be served unless it has received specific authority to do so under § 63.18(e)(3).

(c) Subject to the limitations specified in paragraph (b) of this section and in § 63.17(b), the carrier may provide service by reselling the international services of any other authorized U.S. common carrier or foreign carrier, or by entering into a roaming or other arrangement with a foreign carrier, for the provision of international basic switched, private line, data, television and business services to all international points.

NOTE TO PARAGRAPH (c): For purposes of this paragraph, a roaming arrangement with a foreign carrier is defined as an arrangement under which the subscribers of a U.S. commercial mobile radio service provider use the facilities of a foreign carrier with which the subscriber has no direct pre-existing service or financial relationship to place a call from the foreign country to the United States.

(d) The carrier may provide switched basic services over its authorized resold private lines in either of the following two circumstances:

(1) The country at the foreign end of the private line appears on the Commission's list of international routes exempted from the international settlements policy set forth in § 64.1002 of this chapter; or

(2) The carrier is exchanging switched traffic with a foreign carrier that lacks market power in the country at the foreign end of the private line. A foreign carrier lacks market power for purposes of this section if it does not appear on the Commission's list of foreign carriers that do not qualify for the presumption that they lack market power in particular foreign points.

NOTE TO PARAGRAPH (d): The Commission's list of international routes exempted from the international settlements policy, and the Commission's list of foreign carriers that do not qualify for the presumption that they lack market power in particular foreign points are available on the International Bureau's World Wide Web site at *http://www.fcc.gov/ib*.

(e) The authority granted under this part is subject to all Commission rules and regulations and any conditions or limitations stated in the Commission's public notice or order that serves as the carrier's Section 214 certificate. See §§ 63.12, 63.21 of this part.

[64 FR 19066, Apr. 19, 1999, as amended at 64 FR 34741, June 29, 1999; 67 FR 45391, July 9, 2002; 69 FR 23154, Apr. 28, 2004; 72 FR 54366, Sept. 25, 2007; 76 FR 42573, July 19, 2011]

§ 63.24 Assignments and transfers of control.

(a) *General.* Except as otherwise provided in this section, an international section 214 authorization may be assigned, or control of such authorization may be transferred by the transfer of control of any entity holding such authorization, to another party, whether voluntarily or involuntarily, directly or indirectly, only upon application to and prior approval by the Commission.

(b) *Assignments.* For purposes of this section, an assignment of an authorization is a transaction in which the authorization is assigned from one entity to another entity. Following an assignment, the authorization is held by an entity other than the one to which it was originally granted.

NOTE TO PARAGRAPH (b): The sale of a customer base, or a portion of a customer base, by a carrier to another carrier, is a sale of assets and shall be treated as an assignment, which requires prior Commission approval under this section.

(c) *Transfers of control.* For purposes of this section, a transfer of control is a transaction in which the authorization remains held by the same entity,

but there is a change in the entity or entities that control the authorization holder. A change from less than 50 percent ownership to 50 percent or more ownership shall always be considered a transfer of control. A change from 50 percent or more ownership to less than 50 percent ownership shall always be considered a transfer of control. In all other situations, whether the interest being transferred is controlling must be determined on a case-by-case basis with reference to the factors listed in Note to paragraph (c).

(d) *Pro forma assignments and transfers of control.* Transfers of control or assignments that do not result in a change in the actual controlling party are considered non-substantial or pro forma. Whether there has been a change in the actual controlling party must be determined on a case-by-case basis with reference to the factors listed in Note 1 to this paragraph (d). The types of transactions listed in Note 2 to this paragraph (d) shall be considered presumptively pro forma and prior approval from the Commission need not be sought.

NOTE 1 TO PARAGRAPH (d): Because the issue of control inherently involves issues of fact, it must be determined on a case-by-case basis and may vary with the circumstances presented by each case. The factors relevant to a determination of control in addition to equity ownership include, but are not limited to the following: power to constitute or appoint more than fifty percent of the board of directors or partnership management committee; authority to appoint, promote, demote and fire senior executives that control the day-to-day activities of the licensee; ability to play an integral role in major management decisions of the licensee; authority to pay financial obligations, including expenses arising out of operations; ability to receive monies and profits from the facility's operations; and unfettered use of all facilities and equipment.

NOTE 2 TO PARAGRAPH (d): If a transaction is one of the types listed further, the transaction is presumptively pro forma and prior approval need not be sought. In all other cases, the relevant determination shall be made on a case-by-case basis. Assignment from an individual or individuals (including partnerships) to a corporation owned and controlled by such individuals or partnerships without any substantial change in their relative interests; Assignment from a corporation to its individual stockholders without effecting any substantial change in the disposition of their interests; Assignment or transfer by which certain stockholders retire and the interest transferred is not a controlling one; Corporate reorganization that involves no substantial change in the beneficial ownership of the corporation (including re-incorporation in a different jurisdiction or change in form of the business entity); Assignment or transfer from a corporation to a wholly owned direct or indirect subsidiary thereof or vice versa, or where there is an assignment from a corporation to a corporation owned or controlled by the assignor stockholders without substantial change in their interests; or Assignment of less than a controlling interest in a partnership.

(e) *Applications for substantial transactions.* (1) In the case of an assignment or transfer of control shall of an international section 214 authorization that is not pro forma, the proposed assignee or transferee must apply to the Commission for authority prior to consummation of the proposed assignment or transfer of control.

(2) The application shall include the information requested in paragraphs (a) through (d) of § 63.18 for both the transferor/assignor and the transferee/assignee. The information requested in paragraphs (h) through (p) of § 63.18 is required only for the transferee/assignee. At the beginning of the application, the applicant shall include a narrative of the means by which the proposed transfer or assignment will take place.

(3) The Commission reserves the right to request additional information as to the particulars of the transaction to aid it in making its public interest determination.

(4) An assignee or transferee must notify the Commission no later than thirty (30) days after either consummation of the proposed assignment or transfer of control, or a decision not to consummate the proposed assignment or transfer of control. The notification shall identify the file numbers under which the initial authorization and the authorization of the assignment or transfer of control were granted.

(f) *Notifications for non-substantial or pro forma transactions.* (1) In the case of a pro forma assignment or transfer of control, the section 214 authorization holder is not required to seek prior Commission approval.

(2) A *pro forma* assignee or a carrier that is subject to a *pro forma* transfer of control must file a notification with the Commission no later than thirty (30) days after the assignment or transfer is completed. The notification must contain the following:

(i) The information requested in paragraphs (a) through (d) and (h) of § 63.18 for the transferee/assignee;

(ii) A certification that the transfer of control or assignment was pro forma and that, together with all previous pro forma transactions, does not result in a change in the actual controlling party.

(3) A single notification may be filed for an assignment or transfer of control of more than one authorization if each authorization is identified by the file number under which it was granted.

(4) Upon release of a public notice granting a pro forma assignment or transfer of control, petitions for reconsideration under § 1.106 of this chapter or applications for review under § 1.115 of this chapter of the Commission's rules may be filed within 30 days. Petitioner should address why the assignment or transfer of control in question should have been filed under paragraph (e) of this section rather than under this paragraph (f).

(g) *Involuntary assignments or transfers of control.* In the case of an involuntary assignment or transfer of control to: a bankruptcy trustee appointed under involuntary bankruptcy; an independent receiver appointed by a court of competent jurisdiction in a foreclosure action; or, in the case of death or legal disability, to a person or entity legally qualified to succeed the deceased or disabled person under the laws of the place having jurisdiction over the estate involved; the applicant must make the appropriate filing no later than 30 days after the event causing the involuntary assignment or transfer of control.

(h) Subject to the availability of electronic forms, all applications and notifications described in this section must be filed electronically through the International Bureau Filing System (IBFS). A list of forms that are available for electronic filing can be found on the IBFS homepage. For information on electronic filing requirements, see part 1, §§ 1.1000 through 1.10018 of this chapter and the IBFS homepage at *http://www.fcc.gov/ibfs*. See also §§ 63.20 and 63.53.

[67 FR 45391, July 9, 2002, as amended at 70 FR 38799, July 6, 2005; 72 FR 54366, Sept. 25, 2007]

§ 63.25 Special provisions relating to temporary or emergency service by international carriers.

(a) For the purpose of this section the following definitions shall apply:

(1) *Temporary service* shall mean service for a period not exceeding 6 months;

(2) *Emergency service* shall mean service for which there is an immediate need occasioned by conditions unforeseen by, and beyond the control of, the carrier.

(b) Applicants seeking immediate authorization to provide temporary service or emergency service must file their request with the Commission. Requests must set forth why such immediate authority is required; the nature of the emergency; the type of facilities proposed to be used; the route kilometers thereof; the terminal communities to be served, and airline kilometers between such communities; how these points are currently being served by the applicant or other carriers; the need for the proposed service; the cost involved, including any rentals, the date on which the service is to begin, and where known, the date or approximate date on which the service to is terminate.

(c) Without regard to the other requirements of this part, and by application setting forth the need therefore, any carrier may request continuing authority, subject to termination by the Commission at any time upon ten (10) days' notice to the carrier, to provide temporary or emergency service by the construction or installation of facilities where the estimated construction, installation, and acquisition costs do not exceed $35,000 or an annual rental of not more than $7,000 provided that such project does not involve a major action under the Commission's environmental rules. (*See* subpart I of part 1 of this chapter.) Any carrier to which continuing authority has been granted under this paragraph shall, not later

than the 30th day following the end of each 6-month period covered by such authority, file with the Commission a statement making reference to this paragraph and setting forth, with respect to each project (construction, installation, lease, including any renewals thereof), which was commenced or, in the case of leases, entered into under such authority, and renewal or renewals thereof which were in continuous effect for a period of more than one week, the following information:

(1) The type of facility constructed, installed, or leased;

(2) The route kilometers thereof (excluding leased facilities);

(3) The terminal communities served and the airline kilometers between terminal communities in the proposed project;

(4) The cost thereof, including construction, installation, or lease;

(5) Where appropriate, the name of the lessor company, and the dates of commencement and termination of the lease.

(d)(1) A request may be made by any carrier for continuing authority to lease and operate, during any emergency when its regular facilities become inoperative or inadequate to handle its traffic, facilities or any other carrier between points between which applicant is authorized to communicate by radio for the transmission of traffic which applicant is authorized to handle.

(2) Such request shall make reference to this paragraph and set forth the points between which applicant desires to operate facilities of other carriers and the nature of the traffic to be handled.

(3) Continuing authority for the operation thereafter of such alternate facilities during emergencies shall be deemed granted effective as of the 21st day following the filing of the request unless on or before that date the Commission shall notify the applicant to the contrary: provided, however, Applicant shall, not later than the 30th day following the end of each quarter in which it has operated facilities of any other carrier pursuant to authority granted under this paragraph, file with the Commission a statement in writing making reference to this paragraph and describing each occasion during the quarter when it has operated such facilities, giving dates, points between which such facilities were located, hours or minutes used, nature of traffic handled, and reasons why its own facilities could not be used.

(e) Subject to the availability of electronic forms, all applications and notifications described in this section must be filed electronically through the International Bureau Filing System (IBFS). A list of forms that are available for electronic filing can be found on the IBFS homepage. For information on electronic filing requirements, see part 1, §§ 1.1000 through 1.10018 of this chapter and the IBFS homepage at *http://www.fcc.gov/ibfs*. See also §§ 63.20 and 63.53.

(Sec. 303, 48 Stat. 1082, as amended; 47 U.S.C. 303)

[28 FR 13229, Dec. 5, 1963, as amended at 41 FR 20662, May 20, 1976; 58 FR 44906, Aug. 25, 1993. Redesignated and amended at 64 FR 39939, July 23, 1999; 69 FR 29902, May 26, 2004; 70 FR 38799, July 6, 2005]

General Provisions Relating to All Applications Under Section 214

§ 63.50 Amendment of applications.

Any application may be amended as a matter of right prior to the date of any final action taken by the Commission or designation for hearing. Amendments to applications shall be signed and submitted in the same manner, and with the same number of copies as was the original application. If a petition to deny or other formal objections have been filed to the application, the amendment shall be served on the parties.

(Sec. 303, 48 Stat. 1082, as amended; 47 U.S.C. 303)

[41 FR 20662, May 20, 1976]

§ 63.51 Additional information.

(a) You must provide additional information if the Commission requests you to do so after it initially reviews your application or request.

(b) If you do not respond to the request or other official correspondence, the Commission may dismiss your application without prejudice and you

may file again with a completed application.

(c) Any additional information which the Commission may require must be submitted in the same manner as was the original filing. For information on filing requirements, see part 1, §§ 1.1000 through 1.10018 of this chapter and the IBFS homepage at *http://www.fcc.gov/ibfs*, and § 63.20.

[69 FR 29902, May 26, 2004, as amended at 70 FR 38799, July 6, 2005]

§ 63.52 Copies required; fees; and filing periods for domestic authorizations.

(a) Unless otherwise specified the Commission shall be furnished with an original and 5 copies of applications filed under section 214 of the Communications Act of 1934, as amended; Provided, however, that where applications involve only the supplementation of existing domestic facilities, and the issuance of a certificate is not required, an original and 2 copies of the application shall be furnished. Upon request by the Commission additional copies of the application shall be furnished. Each application shall be accompanied by the fee prescribed in subpart G of part 1 of this chapter.

(b) No application accepted for filing and subject to part 63 of these rules, unless provided for otherwise, shall be granted by the Commission earlier than 30 days following issuance of public notice by the Commission of the acceptance for filing of such application or any major amendment unless said public notice specifies another time period.

(c) Any interested party may file a petition to deny an application within the 30-day or other time period specified in paragraph (b) of this section. The petitioner shall serve a copy of such petition on the applicant no later than the date of filing thereof with the Commission. The petition shall contain specific allegations of fact sufficient to show that the petitioner is a party in interest and that a grant of the application would be prima facie inconsistent with the public interest, convenience and necessity. Such allegations of fact shall, except for those of which official notice may be taken, be supported by affidavit of a person or persons with personal knowledge thereof. The applicant may file an opposition to any petition to deny, and the petitioners may file a reply to such opposition (see § 1.45 of this chapter), and allegations of facts or denials thereof shall similarly be supported by affidavit. These responsive pleadings shall be served on the applicant or petitioners, as appropriate, and other parties to the proceeding.

(Sec. 303, 48 Stat. 1082, as amended; 47 U.S.C. 303)

[41 FR 20662, May 20, 1976; 41 FR 22274, June 2, 1976, as amended at 42 FR 36459, July 15, 1977; 61 FR 10476, Mar. 14, 1996; 61 FR 59201, Nov. 21, 1996; 64 FR 39939, July 23, 1999]

§ 63.53 Form.

(a)(1) Applications for international service under section 214 of the Communications Act must be filed electronically with the Commission. For applications filed electronically it is not necessary to send the original or any copies with the fee payment. Subject to the availability of electronic forms, all applications and other filings described in this section must be filed electronically through the International Bureau Filing System (IBFS). A list of forms that are available for electronic filing can be found on the IBFS homepage. For information on electronic filing requirements, see part 1, §§ 1.1000 through 1.10018 of this chapter and the IBFS homepage at *http://www.fcc.gov/ibfs*. See also §§ 63.20.

(2) Applications for international service under section 214 of the Communications Act that are not filed through IBFS shall be submitted on paper not more than 21.6 cm (8.5 in) wide and not more than 35.6 cm (14 in) long with a left-hand margin of 4 cm (1.5 in). This requirement shall not apply to original documents, or admissible copies thereof, offered as exhibits or to specially prepared exhibits. The impression shall be on one side of the paper only and shall be double-spaced, except that long quotations shall be single-spaced and indented. All papers, except charts and maps, shall be typewritten or prepared by mechanical processing methods, other than letter press, or printed. The foregoing shall not apply to official publications. All copies must be clearly legible.

(b) Applications for domestic authorizations under section 214 of the Communications Act shall be submitted on paper not more than 21.6 cm (8.5 in) wide and not more than 35.6 cm (14 in) long with a left-hand margin of 4 cm (1.5 in). This requirement shall not apply to original documents, or admissible copies thereof, offered as exhibits or to specially prepared exhibits. The impression shall be on one side of the paper only and shall be double-spaced, except that long quotations shall be single-spaced and indented. All papers, except charts and maps, shall be typewritten or prepared by mechanical processing methods, other than letter press, or printed. The foregoing shall not apply to official publications. All copies must be clearly legible.

(c) Applications submitted under Section 214 of the Communications Act for international services and any related pleadings that are in a foreign language shall be accompanied by a certified translation in English.

[61 FR 15733, Apr. 9, 1996, as amended at 67 FR 45392, July 9, 2002; 69 FR 29902, May 26, 2004; 70 FR 38799, July 6, 2005]

DISCONTINUANCE, REDUCTION, OUTAGE AND IMPAIRMENT

§ 63.60 Definitions.

For the purposes of this part, the following definitions shall apply:

(a) For the purposes of §§ 63.60 through 63.90, the term ''carrier,'' when used to refer either to all telecommunications carriers or more specifically to non-dominant telecommunications carriers, shall include interconnected VoIP providers.

(b) *Discontinuance, reduction, or impairment of service* includes, but is not limited to the following:

(1) The closure by a carrier of a telephone exchange rendering interstate or foreign telephone toll service, a public toll station serving a community or part of a community, or a public coast station as defined in § 80.5 of this chapter;

(2) The reduction in hours of service by a carrier at a telephone exchange rendering interstate or foreign telephone toll service, at any public toll station (except at a toll station at which the availability of service to the public during any specific hours is subject to the control of the agent or other persons controlling the premises on which such office or toll station is located and is not subject to the control of such carrier), or at a public coast station; the term *reduction in hours of service* does not include a shift in hours which does not result in any reduction in the number of hours of service.

(3) The conversion of an interconnected VoIP service to a service that permits users to receive calls that originate on the public switched telephone network but not terminate calls to the public switched telephone network, or the converse.

(4) The dismantling or removal from service of any trunk line by a carrier which has the effect of impairing the adequacy or quality of service rendered to any community or part of a community;

(5) The severance by a carrier of physical connection with another carrier (including connecting carriers as defined in section 3(u) of the Communications Act of 1934, as amended) or the termination or suspension of the interchange of traffic with such other carrier;

(c) *Emergency discontinuance, reduction, or impairment of service* means any discontinuance, reduction, or impairment of the service of a carrier occasioned by conditions beyond the control of such carrier where the original service is not restored or comparable service is not established within a reasonable time. For the purpose of this part, a reasonable time shall be deemed to be a period not in excess of the following: 10 days in the case of discontinuance, reduction, or impairment of service at telegraph offices operated directly by the carrier; 15 days in the case of jointly-operated or agency telegraph offices; 10 days in the case of public coast stations; and 60 days in all other cases;

(d) The term ''interconnected VoIP provider'' is an entity that provides interconnected VoIP service as that term is defined in § 9.3 of this chapter.

(e) *Public toll station* means a public telephone station, located in a community, through which a carrier provides

service to the public, and which is connected directly to a toll line operated by such carrier.

(f) For the purposes of §§ 63.60 through 63.90, the term ''service,'' when used to refer to a real-time, two-way voice communications service, shall include interconnected VoIP service as that term is defined in § 9.3 of this chapter but shall not include any interconnected VoIP service that is a ''mobile service'' as defined in § 20.3 of this chapter.

(g) *You*. In this section, ''You'' refers to applicants and licensees.

[28 FR 13229, Dec. 5, 1963, as amended at 45 FR 6585, Jan. 29, 1980; 51 FR 31305, Sept. 2, 1986; 69 FR 29902, May 26, 2004; 74 FR 39563, Aug. 7, 2009]

§ 63.61 Applicability.

Any carrier subject to the provisions of section 214 of the Communications Act of 1934, as amended, proposing to discontinue, reduce or impair interstate or foreign telephone or telegraph service to a community, or a part of a community, shall request authority therefor by formal application or informal request as specified in the pertinent sections of this part:

(a) *Provided, however*, that where service is expanded on an experimental basis for a temporary period of not more than 6 months, no application shall be required to reduce service to its status prior to such expansion but a written notice shall be filed with the Commission within 10 days of the reduction showing:

(1) The date on which, places at which, and extent to which service was expanded; and,

(2) The date on which, places at which, and extent to which such expansion of service was discontinued.

(b) And provided further that a licensee of a radio station who has filed an application for authority to discontinue service provided by such station shall during the period that such application is pending before the Commission, continue to file appropriate applications as may be necessary for extension or renewal of station license in order to provide legal authorization for such station to continue in operation pending final action on the application for discontinuance of service. Procedures for discontinuance, reduction or impairment of service by dominant and non-dominant, domestic carriers are in § 63.71. Procedures for discontinuance, reduction or impairment of international services are in § 63.19.

[71 FR 65751, Nov. 9, 2006]

§ 63.62 Type of discontinuance, reduction, or impairment of telephone or telegraph service requiring formal application.

Authority for the following types of discontinuance, reduction, or impairment of service shall be requested by formal application containing the information required by the Commission in the appropriate sections to this part, except as provided in paragraph (c) of this section, or in emergency cases (as defined in § 63.60(b)) as provided in § 63.63:

(a) The dismantling or removal of a trunk line (for contents of application *see* § 63.500) for all domestic carriers and for dominant international carriers except as modified in § 63.19;

(b) The severance of physical connection or the termination or suspension of the interchange of traffic with another carrier (for contents of application, see § 63.501);

(c) [Reserved]

(d) The closure of a public toll station where no other such toll station of the applicant in the community will continue service (for contents of application, see § 63.504): *Provided, however*, That no application shall be required under this part with respect to the closure of a toll station located in a community where telephone toll service is otherwise available to the public through a telephone exchange connected with the toll lines of a carrier;

(e) Any other type of discontinuance, reduction or impairment of telephone service not specifically provided for by other provisions of this part (for contents of application, see § 63.505);

(f) An application may be filed requesting authority to make a type of reduction in service under specified standards and conditions in lieu of individual applications for each instance

coming within the type of reduction in service proposed.

[28 FR 13229, Dec. 5, 1963, as amended at 45 FR 6585, Jan. 29, 1980; 60 FR 35509, July 10, 1995; 61 FR 15733, Apr. 9, 1996]

§ 63.63 Emergency discontinuance, reduction, or impairment of service.

(a) Application for authority for emergency discontinuance, reduction, or impairment of service shall be made by filing an informal request in quintuplicate as soon as practicable but not later than 15 days in the case of public coast stations; or 65 days in all other cases, after the occurrence of the conditions which have occasioned the discontinuance, reduction, or impairment. The request shall make reference to this section and show the following:

(1) The effective date of such discontinuance, reduction, or impairment, and the identification of the service area affected;

(2) The nature and estimated duration of the conditions causing the discontinuance, reduction, or impairment;

(3) The facts showing that such conditions could not reasonably have been foreseen by the carrier in sufficient time to prevent such discontinuance, reduction, or impairment;

(4) A description of the service involved;

(5) The nature of service which will be available or substituted;

(6) The effect upon rates to any person in the community;

(7) The efforts made and to be made by applicant to restore the original service or establish comparable service as expeditiously as possible.

(b) Authority for the emergency discontinuance, reduction, or impairment of service for a period of 60 days shall be deemed to have been granted by the Commission effective as of the date of the filing of the request unless, on or before the 15th day after the date of filing, the Commission shall notify the carrier to the contrary. Renewal of such authority may be requested by letter or telegram, filed with the Commission not later than 10 days prior to the expiration of such 60-day period, making reference to this section and showing that such conditions may reasonably be expected to continue for a further period and what efforts the applicant has made to restore the original or establish comparable service. If the same or comparable service is reestablished before the termination of the emergency authorization, the carrier shall notify the Commission promptly. However, the Commission may, upon specific request of the carrier and upon a proper showing, contained in such informal request, authorize such discontinuance, reduction, or impairment of service for an indefinite period or permanently.

[28 FR 13229, Dec. 5, 1963, as amended at 45 FR 6585, Jan. 29, 1980]

§ 63.65 Closure of public toll station where another toll station of applicant in the community will continue service.

(a) Except in emergency cases (as defined in § 63.60(b) and as provided in § 63.63), authority to close a public toll station in a community in which another toll station of the applicant will continue service shall be requested by an informal request, filed in quintuplicate, making reference to this paragraph and showing the following:

(1) Location of toll station to be closed and distance from nearest toll station to be retained;

(2) Description of service area affected, including approximate population and character of the business of the community;

(3) Average number of toll telephone messages sent-paid and received-collect for the preceding six months;

(4) Average number of telegraph messages sent-paid and received-collect for the preceding six months;

(5) Statement of reasons for desiring to close the station.

(b) Authority for closures requested under paragraph (a) of this section shall be deemed to have been granted by the Commission effective as of the 15th day following the date of filing such request unless, on or before the 15th day, the Commission shall notify the carrier to the contrary.

§ 63.66 Closure of or reduction of hours of service at telephone exchanges at military establishments.

Where a carrier desires to close or reduce hours of service at a telephone exchange located at a military establishment because of the deactivation of such establishment, it may, in lieu of filing formal application, file in quintuplicate an informal request. Such request shall make reference to this section and shall set forth the class of office, address, date of proposed closure or reduction, description of service to remain or be substituted, statement as to any difference in charges to the public, and the reasons for the proposed closure or reduction. Authority for such closure or reduction shall be deemed to have been granted by the Commission, effective as of the 15th day following the date of filing of such request, unless, on or before the 15th day, the Commission shall notify the carrier to the contrary.

[45 FR 6585, Jan. 29, 1980]

§ 63.71 Procedures for discontinuance, reduction or impairment of service by domestic carriers.

Any domestic carrier that seeks to discontinue, reduce or impair service shall be subject to the following procedures:

(a) The carrier shall notify all affected customers of the planned discontinuance, reduction, or impairment of service and shall notify and submit a copy of its application to the public utility commission and to the Governor of the State in which the discontinuance, reduction, or impairment of service is proposed, and also to the Secretary of Defense, Attn. Special Assistant for Telecommunications, Pentagon, Washington, DC 20301. Notice shall be in writing to each affected customer unless the Commission authorizes in advance, for good cause shown, another form of notice. Notice shall include the following:

(1) Name and address of carrier;

(2) Date of planned service discontinuance, reduction or impairment;

(3) Points of geographic areas of service affected;

(4) Brief description of type of service affected; and

(5) One of the following statements:

(i) If the carrier is non-dominant with respect to the service being discontinued, reduced or impaired, the notice shall state: The FCC will normally authorize this proposed discontinuance of service (or reduction or impairment) unless it is shown that customers would be unable to receive service or a reasonable substitute from another carrier or that the public convenience and necessity is otherwise adversely affected. If you wish to object, you should file your comments as soon as possible, but no later than 15 days after the Commission releases public notice of the proposed discontinuance. Address them to the Federal Communications Commission, Wireline Competition Bureau, Competition Policy Division, Washington, DC 20554, and include in your comments a reference to the § 63.71 Application of (carrier's name). Comments should include specific information about the impact of this proposed discontinuance (or reduction or impairment) upon you or your company, including any inability to acquire reasonable substitute service.

(ii) If the carrier is dominant with respect to the service being discontinued, reduced or impaired, the notice shall state: The FCC will normally authorize this proposed discontinuance of service (or reduction or impairment) unless it is shown that customers would be unable to receive service or a reasonable substitute from another carrier or that the public convenience and necessity is otherwise adversely affected. If you wish to object, you should file your comments as soon as possible, but no later than 30 days after the Commission releases public notice of the proposed discontinuance. Address them to the Federal Communications Commission, Wireline Competition Bureau, Competition Policy Division, Washington, DC 20554, and include in your comments a reference to the § 63.71 Application of (carrier's name). Comments should include specific information about the impact of this proposed discontinuance (or reduction or impairment) upon you or your company, including any inability to acquire reasonable substitute service.

(b) The carrier shall file with this Commission, on or after the date on

which notice has been given to all affected customers, an application which shall contain the following:

(1) Caption—''Section 63.71 Application'';

(2) Information listed in § 63.71(a) (1) through (4) above;

(3) Brief description of the dates and methods of notice to all affected customers;

(4) Whether the carrier is considered dominant or non-dominant with respect to the service to be discontinued, reduced or impaired; and

(5) Any other information the Commission may require.

(c) The application to discontinue, reduce or impair service, if filed by a domestic, non-dominant carrier, shall be automatically granted on the 31st day after its filing with the Commission without any Commission notification to the applicant unless the Commission has notified the applicant that the grant will not be automatically effective. The application to discontinue, reduce or impair service, if filed by a domestic, dominant carrier, shall be automatically granted on the 60th day after its filing with the Commission without any Commission notification to the applicant unless the Commission has notified the applicant that the grant will not be automatically effective. For purposes of this section, an application will be deemed filed on the date the Commission releases public notice of the filing.

(d) Procedures for discontinuance, reduction or impairment of international services are in § 63.19.

[64 FR 39939, July 23, 1999, as amended at 71 FR 65751, Nov. 9, 2006; 73 FR 56741, Sept. 30, 2008]

§ 63.90 Publication and posting of notices.

(a) Immediately upon the filing of an application or informal request (except a request under § 63.71) for authority to close or otherwise discontinue the operation, or reduce the hours of service at a telephone exchange (except an exchange located at a military establishment), the applicant shall post a public notice at least 51 cm by 61 cm (20 inches by 24 inches), with letter of commensurate size, in a conspicuous place in the exchange affected, and also in the window of any such exchange having window space fronting on a public street at street level. Such notice shall be posted at least 14 days and shall contain the following information, as may be applicable:

(1) Date of first posting of notice;

(2) Name of applicant;

(3) A statement that application has been made to the Federal Communications Commission;

(4) Date when application was filed in the Commission;

(5) A description of the discontinuance, reduction, or impairment of service for which authority is sought including the address or other appropriate identification of the exchange or station involved;

(6) If applicant proposes to reduce hours of service, a description of present and proposed hours of service;

(7) A complete description of the substitute service, if any, to be provided if the application is granted.

(8) A statement that any member of the public desiring to protest or support the application may communicate in writing with the Federal Communications Commission, Washington, DC 20554, on or before a specified date which shall be 20 days from the date of first posting of the notice.

(b) Immediately upon the filing of an application or informal request of the nature described in paragraph (a) of this section, the applicant shall also cause to be published a notice of not less than 10 column centimeters (4 column inches) in size containing information similar to that specified in paragraph (a), at least once during each of 2 consecutive weeks, in some newspaper of general circulation in the community or part of the community affected.

(c) Immediately upon the filing of an application or informal request or upon the filing of a formal application to close a public toll station (except a toll station located at a military establishment), applicant shall post a public notice at least A3 (29.7 cm × 42.0 cm) or 11 in × 17 in (27.9 cm × 43.2 cm) in size as provided in paragraph (a) of this section or, in lieu thereof, applicant shall cause to be published a newspaper notice as provided in paragraph (b) of this section.

(d) Immediately upon the filing of any application or informal request for authority to discontinue, reduce, or impair service, or any notice of resumption of service under § 63.63(b), the applicant shall give written notice of the filing together with a copy of such application to the State Commission (as defined in section 3(t) of the Communications Act of 1934, as amended) of each State in which any discontinuance, reduction or impairment is proposed.

(e) When the posting, publication, and notification as required in paragraphs (a), (b), (c) and (d) of this section have been completed, applicant shall report such fact to the Commission, stating the name of the newspaper in which publication was made, the name of the Commissions notified, and the dates of posting, publication, and notification.

[45 FR 6585, Jan. 29, 1980, as amended at 45 FR 76169, Nov. 18, 1980; 58 FR 44907, Aug. 25, 1993; 60 FR 35510, July 10, 1995]

§ 63.100 Notification of service outage.

The requirements for communications providers concerning communications disruptions and the filing of outage reports are set forth in part 4 of this chapter.

[69 FR 70342, Dec. 3, 2004]

CONTENTS OF APPLICATIONS; EXAMPLES

§ 63.500 Contents of applications to dismantle or remove a trunk line.

The application shall contain:

(a) The name and address of each applicant;

(b) The name, title, and post office address of the officer to whom correspondence concerning the application is to be addressed;

(c) Nature of proposed discontinuance, reduction, or impairment;

(d) Identification of community or part of community involved and date on which applicant desires to make proposed discontinuance, reduction, or impairment effective; if for a temporary period only, indicate the approximate period for which authorization is desired;

(e) Proposed new tariff listing, if any, and difference, if any, between present charges to the public and charges for the service to be substituted;

(f) Description of the service area affected including population and general character of business of the community;

(g) Name of any other carrier or carriers providing telegraph or telephone service to the community;

(h) Statement of the reasons for proposed discontinuance, reduction, or impairment;

(i) Statement of the factors showing that neither present nor future public convenience and necessity would be adversely affected by the granting of the application;

(j) Description of any previous discontinuance, reduction, or impairment of service to the community affected by the application, which has been made by the applicant during the 12 months preceding filing of application, and statement of any present plans for future discontinuance, reduction, or impairment of service to such community;

(k) A map or sketch showing:

(1) Routes of line proposed to be removed from service and of alternate lines, if any, to be retained;

(2) Type and ownership of structures (open wire, aerial cable, underground cable, carrier systems, etc.);

(3) Cities and towns along routes with approximate population of each, and route kilometers between the principal points;

(4) Location of important operating centers and repeater or relay points;

(5) State boundary lines through which the facilities extend;

(l) A wire chart showing, for both the line proposed to be removed and the alternate lines to be retained, the regular and normal assignment of each wire, its method of operation, the number of channels and normal assignment of each;

(m) The number of wires or cables to be removed and the kind, size, and length of each;

(n) A complete statement showing how the traffic load on the line proposed to be removed will be diverted to other lines and the adequacy of such

other lines to handle the increased load.

[28 FR 13229, Dec. 5, 1963, as amended at 58 FR 44907, Aug. 25, 1993]

§ 63.501 Contents of applications to sever physical connection or to terminate or suspend interchange of traffic with another carrier.

The application shall contain:

(a) The name and address of each applicant;

(b) The name, title, and post office address of the officer to whom correspondence concerning the application is to be addressed;

(c) Nature of the proposed change;

(d) Identification of community or part of community involved and date on which applicant desires to make proposed discontinuance, reduction, or impairment effective; if for a temporary period only, indicate the approximate period for which authorization is desired;

(e) Proposed new tariff listing, if any, and differences, if any, between present charges to the public and charges for the service to be substituted;

(f) Description of the service area affected including population and general character of business of the community;

(g) Name of any other carrier or carriers providing telegraph or telephone service to the community;

(h) Statement of the reasons for proposed discontinuance, reduction, or impairment;

(i) Statement of the factors showing that neither present nor future public convenience and necessity would be adversely affected by the granting of the application;

(j) Description of any previous discontinuance, reduction, or impairment of service to the community affected by the application, which has been made by the applicant during the 12 months preceding filing of application, and statement of any present plans for future discontinuance, reduction, or impairment of service to such community;

(k) Name of other carrier;

(l) Points served through such physical connection or interchange;

(m) Description of the service involved;

(n) Statement as to how points served by means of such physical connection or interchange will be served thereafter;

(o) Amount of traffic interchanged for each month during preceding 6-month period;

(p) Statement as to whether severance of physical connection or termination or suspension of interchange of traffic is being made with consent of other carrier.

§ 63.504 Contents of applications to close a public toll station where no other such toll station of the applicant in the community will continue service and where telephone toll service is not otherwise available to the public through a telephone exchange connected with the toll lines of a carrier.

The application shall contain:

(a) The name and address of each applicant;

(b) The name, title, and post office address of the officer to whom correspondence concerning the application is to be addressed;

(c) Nature of proposed discontinuance, reduction, or impairment;

(d) Identification of community or part of community involved and date on which applicant desires to make proposed discontinuance, reduction, or impairment effective; if for a temporary period only, indicate the approximate period for which authorization is desired;

(e) Proposed new tariff listing, if any, and difference, if any, between present charges to the public and charges for the service to be substituted, if any;

(f) Description of the service area affected including population and general character of business of the community;

(g) Name of other carrier or carriers, if any, which will provide toll station service in the community;

(h) Statement of the reasons for proposed discontinuance, reduction, or impairment;

(i) Statement of the factors showing that neither present nor future public convenience and necessity would be adversely affected by the granting of the application;

(j) Description of any previous discontinuance, reduction, or impairment

of service to the community affected by the application, which has been made by the applicant during the 12 months preceding filing of application, and statement of any present plans for future discontinuance, reduction, or impairment of service to such community;

(k) Description of the service involved, including a statement of the number of toll telephone messages or telegraph messages sent-paid and received-collect, and the revenues from such traffic, in connection with the service proposed to be discontinued for each of the past 6 months; and, if the volume of such traffic handled in the area has decreased during recent years, the reasons therefor.

§ 63.505 Contents of applications for any type of discontinuance, reduction, or impairment of telephone service not specifically provided for in this part.

The application shall contain:

(a) The name and address of each applicant;

(b) The name, title, and post office address of the officer to whom correspondence concerning the application is to be addressed;

(c) Nature of proposed discontinuance, reduction, or impairment;

(d) Identification of community or part of community involved and date on which applicant desires to make proposed discontinuance, reduction or impairment effective, if for a temporary period only, indicate the approximate period for which authorization is desired;

(e) Proposed new tariff listing, if any, and difference, if any, between present charges to the public and charges for the service to be substituted;

(f) Description of the service area affected including population and general character of business of the community;

(g) Name of any other carrier or carriers providing telephone service to the community;

(h) Statement of the reasons for proposed discontinuance, reduction, or impairment;

(i) Statement of the factors showing that neither present nor future public convenience and necessity would be adversely affected by the granting of the application;

(j) Description of any previous discontinuance, reduction, or impairment of service to the community affected by the application, which has been made by the applicant during the 12 months preceding filing of application, and statement of any present plans for future discontinuance, reduction, or impairment of service to such community;

(k) Description of the service involved, including:

(1) Existing telephone service by the applicant available to the community or part thereof involved;

(2) Telephone service (available from applicant or others) which would remain in the community or part thereof involved in the event the application is granted;

(l) A statement of the number of toll messages sent-paid and received-collect and the revenues from such traffic in connection with the service proposed to be discontinued, reduced, or impaired for each of the past 6 months; and, if the volume of such traffic handled in the area has decreased during recent years, the reasons therefor.

[45 FR 6586, Jan. 29, 1980]

§ 63.601 Contents of applications for authority to reduce the hours of service of public coast stations under the conditions specified in § 63.70.

F.C.C. File No. T__D_____

Month _____ Year _____

_____
(Name of applicant)

_____
(Address of applicant)

In the matter of Proposed Reduction in Hours of Service of a Public Coast Station Pursuant to § 63.70 of the Commission's rules.

Data regarding public coast station _____

(Call and address)

Present hours:
Monday through Friday _____
Saturday _____
Sunday _____

Proposed hours:
Monday through Friday _____
Saturday _____
Sunday _____

Proposed effective time and date of change

Average number of messages handled for month of _____, 19____

during total hours to be deleted _____

during maximum hour to be deleted _____

Data regarding substitute service to be provided by other public coast stations available and capable of providing service to the community affected, or in the marine area served by the public coast station involved:

Station call and location	Operated by	Hours of service		
		Monday thru Friday	Saturday	Sunday

REQUEST FOR DESIGNATION AS A RECOGNIZED PRIVATE OPERATING AGENCY

§ 63.701 Contents of application.

Except as otherwise provided in this part, any party requesting designation as a recognized operating agency within the meaning of the International Telecommunication Convention shall file a request for such designation with the Commission. A request for designation as a recognized operating agency within the meaning of the International Telecommunication Convention shall include a statement of the nature of the services to be provided and a statement that the party is aware that it is obligated under Article 6 of the ITU Constitution to obey the mandatory provisions thereof, and all regulations promulgated thereunder, and a pledge that it will engage in no conduct or operations that contravene such mandatory provisions and that it will otherwise obey the Convention and regulations in all respects. The party must also include a statement that it is aware that failure to comply will result in an order from the Federal Communications Commission to cease and desist from future violations of an ITU regulation and may result in revocation of its recognized operating agency status by the United States Department of State. Such statement must include the following information where applicable:

(a) The name and address of each applicant;

(b) The Government, State, or Territory under the laws of which each corporate applicant is organized;

(c) The name, title and post office address of the officer of a corporate applicant, or representative of a non-corporate applicant, to whom correspondence concerning the application is to be addressed;

(d) A statement of the ownership of a non-corporate applicant, or the ownership of the stock of a corporate applicant, including an indication whether the applicant or its stock is owned directly or indirectly by an alien;

(e) A copy of each corporate applicant's articant's articles of incorporation (or its equivalent) and of its corporate bylaws;

(f) A statement whether the applicant is a carrier subject to section 214 of the Communications Act, an operator of broadcast or other radio facilities, licensed under title III of the Act, capable of causing harmful interference with the radio transmissions of other countries, or a non-carrier provider of services classed as ''enhanced'' under § 64.702(a);

(g) A statement that the services for which designated as a recognized private operating agency is sought will be extended to a point outside the United States or are capable of causing harmful interference of other radio transmission and a statement of the nature of the services to be provided;

(h) A statement setting forth the points between which the services are to be provided; and

(i) A statement as to whether covered services are provided by facilities owned by the applicant, by facilities leased from another entity, or other arrangement and a description of the arrangement.

(j) Subject to the availability of electronic forms, all filings described in this section must be filed electronically through the International Bureau Filing System (IBFS). A list of forms that are available for electronic filing can be found on the IBFS homepage. For information on electronic filing requirements, see part 1, §§ 1.1000 through 1.10018 of this chapter and the IBFS

homepage at *http://www.fcc.gov/ibfs*. See also §§ 63.20 and 63.53.

[51 FR 18448, May 20, 1986, as amended at 69 FR 29902, May 26, 2004; 70 FR 38800, July 6, 2005]

§ 63.702 Form.

Application under § 63.701 shall be submitted in the form specified in § 63.53 for applications under section 214 of the Communications Act.

[51 FR 18448, May 20, 1986]

PART 64—MISCELLANEOUS RULES RELATING TO COMMON CARRIERS

Subpart A—Traffic Damage Claims

Sec.
64.1 Traffic damage claims.

Subpart B—Restrictions on Indecent Telephone Message Services

64.201 Restrictions on indecent telephone message services.

Subpart C—Furnishing of Facilities to Foreign Governments for International Communications

64.301 Furnishing of facilities to foreign governments for international communications.

Subpart D—Procedures for Handling Priority Services in Emergencies

64.401 Policies and procedures for provisioning and restoring certain telecommunications services in emergencies.
64.402 Policies and procedures for the provision of priority access service by commercial mobile radio service providers.

Subpart E—Use of Recording Devices by Telephone Companies

64.501 Recording of telephone conversations with telephone companies.

Subpart F—Telecommunications Relay Services and Related Customer Premises Equipment for Persons With Disabilities

64.601 Definitions and provisions of general applicability.
64.602 Jurisdiction.
64.603 Provision of services.
64.604 Mandatory minimum standards.
64.605 Emergency calling requirements.
64.606 Internet-based TRS provider and TRS program certification.
64.607 Furnishing related customer premises equipment.
64.608 Provision of hearing aid compatible telephones by exchange carriers.
64.609 Enforcement of related customer premises equipment rules.
64.610 Establishment of a National Deaf-Blind Equipment Distribution Program.
64.611 Internet-based TRS registration.
64.613 Numbering directory for Internet-based TRS users.
64.615 TRS User Registration Database and administrator.
64.617 Neutral Video Communication Service Platform.
64.619 VRS Access Technology Reference Platform and administrator.
64.621 Interoperability and portability.
64.623 Administrator requirements.
64.630 Applicability of change of default TRS provider rules.
64.631 Verification of orders for change of default TRS providers.
64.632 Letter of authorization form and content.
64.633 Procedures for resolution of unauthorized changes in default provider.
64.634 Procedures where the Fund has not yet reimbursed the provider.
64.635 Procedures where the Fund has already reimbursed the provider.
64.636 Prohibition of default provider freezes.

Subpart G—Furnishing of Enhanced Services and Customer-Premises Equipment by Communications Common Carriers; Telephone Operator Services

64.702 Furnishing of enhanced services and customer-premises equipment.
64.703 Consumer information.
64.704 Call blocking prohibited.
64.705 Restrictions on charges related to the provision of operator services.
64.706 Minimum standards for the routing and handling of emergency telephone calls.
64.707 Public dissemination of information by providers of operator services.
64.708 Definitions.
64.709 Informational tariffs.
64.710 Operator services for prison inmate phones.

Subpart H—Extension of Unsecured Credit for Interstate and Foreign Communications Services to Candidates for Federal Office

64.801 Purpose.
64.802 Applicability.
64.803 Definitions.
64.804 Rules governing the extension of unsecured credit to candidates or persons on behalf of such candidates for Federal

office for interstate and foreign common carrier communication services.

Subpart I—Allocation of Costs

64.901 Allocation of costs.
64.902 Transactions with affiliates.
64.903 Cost allocation manuals.
64.904 Independent audits.
64.905 Annual certification.

Subpart J [Reserved]

Subpart K—Changes in Preferred Telecommunications Service Providers

64.1100 Definitions.
64.1110 State notification of election to administer FCC rules.
64.1120 Verification of orders for telecommunications service.
64.1130 Letter of agency form and content.
64.1140 Carrier liability for slamming.
64.1150 Procedures for resolution of unauthorized changes in preferred carrier.
64.1160 Absolution procedures where the subscriber has not paid charges.
64.1170 Reimbursement procedures where the subscriber has paid charges.
64.1190 Preferred carrier freezes.
64.1195 Registration requirement.

Subpart L—Restrictions on Telemarketing, Telephone Solicitation, and Facsimile Advertising

64.1200 Delivery restrictions.
64.1201 Restrictions on billing name and address disclosure.
64.1202 Public safety answering point do-not-call registry.

Subpart M—Provision of Payphone Service

64.1300 Payphone compensation obligation.
64.1301 Per-payphone compensation.
64.1310 Payphone compensation procedures.
64.1320 Payphone compensation verification and reports.
64.1330 State review of payphone entry and exit regulations and public interest payphones.
64.1340 Right to negotiate.

Subpart N—Expanded Interconnection

64.1401 Expanded interconnection.
64.1402 Rights and responsibilities of interconnectors.

Subpart O—Interstate Pay-Per-Call and Other Information Services

64.1501 Definitions.
64.1502 Limitations on the provision of pay-per-call services.
64.1503 Termination of pay-per-call and other information programs.
64.1504 Restrictions on the use of toll-free numbers.
64.1505 Restrictions on collect telephone calls.
64.1506 Number designation.
64.1507 Prohibition on disconnection or interruption of service for failure to remit pay-per-call and similar service charges.
64.1508 Blocking access to 900 service.
64.1509 Disclosure and dissemination of pay-per-call information.
64.1510 Billing and collection of pay-per-call and similar service charges.
64.1511 Forgiveness of charges and refunds.
64.1512 Involuntary blocking of pay-per-call services.
64.1513 Verification of charitable status.
64.1514 Generation of signalling tones.
64.1515 Recovery of costs.

Subpart P—Calling Party Telephone Number; Privacy

64.1600 Definitions.
64.1601 Delivery requirements and privacy restrictions.
64.1602 Restrictions on use and sale of telephone subscriber information provided pursuant to automatic number identification or charge number services.
64.1603 Customer notification.
64.1604 Prohibition on transmission of inaccurate or misleading caller identification information.
64.1605 Effective date.

Subpart Q—Implementation of Section 273(d)(5) of the Communications Act: Dispute Resolution Regarding Equipment Standards

64.1700 Purpose and scope.
64.1701 Definitions.
64.1702 Procedures.
64.1703 Dispute resolution default process.
64.1704 Frivolous disputes/penalties.

Subpart R—Geographic Rate Averaging and Rate Integration

64.1801 Geographic rate averaging and rate integration.

Subpart S—Nondominant Interexchange Carrier Certifications Regarding Geographic Rate Averaging and Rate Integration Requirements

64.1900 Nondominant interexchange carrier certifications regarding geographic rate

averaging and rate integration requirements.

Subpart T—Separate Affiliate Requirements for Incumbent Independent Local Exchange Carriers That Provide In-Region, Interstate Domestic Interexchange Services or In-Region International Interexchange Services

64.1901 Basis and purpose.
64.1902 Terms and definitions.
64.1903 Obligations of all incumbent independent local exchange carriers.

Subpart U—Customer Proprietary Network Information

64.2001 Basis and purpose.
64.2003 Definitions.
64.2005 Use of customer proprietary network information without customer approval.
64.2007 Approval required for use of customer proprietary network information.
64.2008 Notice required for use of customer proprietary network information.
64.2009 Safeguards required for use of customer proprietary network information.
64.2010 Safeguards on the disclosure of customer proprietary network information.
64.2011 Notification of customer proprietary network information security breaches.

Subpart V—Recording, Retention and Reporting of Data on Long-Distance Telephone Calls to Rural Areas and Reporting of Data on Long-Distance Telephone Calls to Nonrural Areas

64.2101 Definitions.
64.2103 Retention of call attempt records.
64.2105 Reporting requirements.
64.2107 Reduced retention and reporting requirements for qualifying providers under the Safe Harbor.
64.2109 Disclosure of data.

Subpart W—Ring Signaling Integrity

64.2201 Ringing indication requirements.

Subpart X—Subscriber List Information

64.2301 Basis and purpose.
64.2305 Definitions.
64.2309 Provision of subscriber list information.
64.2313 Timely basis.
64.2317 Unbundled basis.
64.2321 Nondiscriminatory rates, terms, and conditions.
64.2325 Reasonable rates, terms, and conditions.
64.2329 Format.
64.2333 Burden of proof.
64.2337 Directory publishing purposes.
64.2341 Record keeping.
64.2345 Primary advertising classification.

Subpart Y—Truth-in-Billing Requirements for Common Carriers; Billing for Unauthorized Charges

64.2400 Purpose.
64.2401 Scope.

Subpart Z—Prohibition on Exclusive Telecommunications Contracts

64.2500 Prohibited agreements.
64.2501 Scope of limitation.
64.2502 Effect of state law or regulation.

Subpart AA—Universal Emergency Telephone Number

64.3000 Definitions.
64.3001 Obligation to transmit 911 calls.
64.3002 Transition to 911 as the universal emergency telephone number.
64.3003 Obligation for providing a permissive dialing period.
64.3004 Obligation for providing an intercept message.

Subpart BB—Restrictions on Unwanted Mobile Service Commercial Messages

64.3100 Restrictions on mobile service commercial messages.

Subpart CC—Customer Account Record Exchange Requirements

64.4000 Basis and purpose.
64.4001 Definitions.
64.4002 Notification obligations of LECs.
64.4003 Notification obligations of IXCs.
64.4004 Timeliness of required notifications.
64.4005 Unreasonable terms or conditions on the provision of customer account information.
64.4006 Limitations on use of customer account information.

Subpart DD—Prepaid Calling Card Providers

64.5000 Definitions.
64.5001 Reporting and certification requirements.

Subpart EE—TRS Customer Proprietary Network Information.

64.5101 Basis and purpose.
64.5103 Definitions.
64.5105 Use of customer proprietary network information without customer approval.
64.5107 Approval required for use of customer proprietary network information.
64.5108 Notice required for use of customer proprietary network information.

64.5109 Safeguards required for use of customer proprietary network information.
64.5110 Safeguards on the disclosure of customer proprietary network information.
64. 5111 Notification of customer proprietary network information security breaches.

Subpart FF—Inmate Calling Services

64.6000 Definitions.
64.6010 Cost-based rates for inmate calling services.
64.6020 Interim safe harbor.
64.6030 Inmate calling services interim rate cap.
64.6040 Rates for Telecommunications Relay Service (TRS) calling.
64.6050 Billing-related call blocking.
64.6060 Annual reporting and certification requirement.

APPENDIX A TO PART 64—TELECOMMUNICATIONS SERVICE PRIORITY (TSP) SYSTEM FOR NATIONAL SECURITY EMERGENCY PREPAREDNESS (NSEP)
APPENDIX B TO PART 64—PRIORITY ACCESS SERVICE (PAS) FOR NATIONAL SECURITY AND EMERGENCY PREPAREDNESS (NSEP)

AUTHORITY: 47 U.S.C. 154, 254(k); 403(b)(2)(B), (c), Pub. L. 104–104, 110 Stat. 56. Interpret or apply 47 U.S.C. 201, 218, 222, 225, 226, 227, 228, 254(k), 616, 620, and the Middle Class Tax Relief and Job Creation Act of 2012, Pub. L. 112–96, unless otherwise noted.

SOURCE: 28 FR 13239, Dec. 5, 1963, unless otherwise noted.

Subpart A—Traffic Damage Claims

§ 64.1 Traffic damage claims.

(a) Each carrier engaged in furnishing radio-telegraph, wire-telegraph, or ocean-cable service shall maintain separate files for each damage claim of a traffic nature filed with the carrier, showing the name, address, and nature of business of the claimant, the basis for the claim, disposition made, and all correspondence, reports, and records pertaining thereto. Such files shall be preserved in accordance with existing rules of the Commission (part 42 of this chapter) and at points (one or more) to be specifically designated by each carrier.

(b) The aforementioned carriers shall make no payment as a result of any traffic damage claim if the amount of the payment would be in excess of the total amount collected by the carrier on the message or messages from which the claim arose unless such claim be presented to the carrier in writing signed by the claimant and setting forth the reason for the claim.

Subpart B—Restrictions on Indecent Telephone Message Services

§ 64.201 Restrictions on indecent telephone message services.

(a) It is a defense to prosecution for the provision of indecent communications under section 223(b)(2) of the Communications Act of 1934, as amended (the Act), 47 U.S.C. 223(b)(2), that the defendant has taken the action set forth in paragraph (a)(1) of this section and, in addition, has complied with the following: Taken one of the actions set forth in paragraphs (a)(2), (3), or (4) of this section to restrict access to prohibited communications to persons eighteen years of age or older, and has additionally complied with paragraph (a)(5) of this section, where applicable:

(1) Has notified the common carrier identified in section 223(c)(1) of the Act, in writing, that he or she is providing the kind of service described in section 223(b)(2) of the Act.

(2) Requires payment by credit card before transmission of the message; or

(3) Requires an authorized access or identification code before transmission of the message, and where the defendant has:

(i) Issued the code by mailing it to the applicant after reasonably ascertaining through receipt of a written application that the applicant is not under eighteen years of age; and

(ii) Established a procedure to cancel immediately the code of any person upon written, telephonic or other notice to the defendant's business office that such code has been lost, stolen, or used by a person or persons under the age of eighteen, or that such code is no longer desired; or

(4) Scrambles the message using any technique that renders the audio unintelligible and incomprehensible to the calling party unless that party uses a descrambler; and,

(5) Where the defendant is a message sponsor subscriber to mass announcement services tariffed at this Commission and such defendant prior to the

transmission of the message has requested in writing to the carrier providing the public announcement service that calls to this message service be subject to billing notification as an adult telephone message service.

(b) A common carrier within the District of Columbia or within any State, or in interstate or foreign commerce, shall not, to the extent technically feasible, provide access to a communication described in section 223(b) of the Act from the telephone of any subscriber who has not previously requested in writing the carrier to provide access to such communication if the carrier collects from subscribers an identifiable charge for such communication that the carrier remits, in whole or in part, to the provider of such communication.

[52 FR 17761, May 12, 1987, as amended at 55 FR 28916, July 16, 1990]

Subpart C—Furnishing of Facilities to Foreign Governments for International Communications

§ 64.301 Furnishing of facilities to foreign governments for international communications.

Common carriers by wire and radio shall, in accordance with section 201 of the Communications Act, furnish services and facilities for communications to any foreign government upon reasonable demand therefor: *Provided, however*, That, if a foreign government fails or refuses, upon reasonable demand, to furnish particular services and facilities to the United States Government for communications between the territory of that government and the United States or any other point, such carriers shall, to the extent specifically ordered by the Commission, deny equivalent services or facilities in the United States to such foreign government for communications between the United States and the territory of that foreign government or any other point.

(Secs. 201, 214, 303, 308, 48 Stat. 1075, 1082, 1085; 47 U.S.C. 201, 214, 303, 308)

[28 FR 13242, Dec. 5, 1963]

Subpart D—Procedures for Handling Priority Services in Emergencies

§ 64.401 Policies and procedures for provisioning and restoring certain telecommunications services in emergencies.

The communications common carrier shall maintain and provision and, if disrupted, restore facilities and services in accordance with policies and procedures set forth in Appendix A to this part.

[65 FR 48396, Aug. 8, 2000]

§ 64.402 Policies and procedures for the provision of priority access service by commercial mobile radio service providers.

Commercial mobile radio service providers that elect to provide priority access service to National Security and Emergency Preparedness personnel shall provide priority access service in accordance with the policies and procedures set forth in Appendix B to this part.

[65 FR 48396, Aug. 8, 2000]

Subpart E—Use of Recording Devices by Telephone Companies

§ 64.501 Recording of telephone conversations with telephone companies.

No telephone common carrier, subject in whole or in part to the Communications Act of 1934, as amended, may use any recording device in connection with any interstate or foreign telephone conversation between any member of the public, on the one hand, and any officer, agent or other person acting for or employed by any such telephone common carrier, on the other hand, except under the following conditions:

(a) Where such use shall be preceded by verbal or written consent of all parties to the telephone conversation, or

(b) Where such use shall be preceded by verbal notification which is recorded at the beginning, and as part of the call, by the recording party, or

(c) Where such use shall be accompanied by an automatic tone warning device, which will automatically

produce a distinct signal that is repeated at regular intervals during the course of the telephone conversation when the recording device is in use. *Provided That:*

(1) The characteristics of the warning tone shall be the same as those specified in the Orders of this Commission adopted by it in ''Use of Recording Devices in Connection With Telephone Service,'' Docket 6787, 11 FCC 1033 (1947); 12 FCC 1005 (November 26, 1947); 12 FCC 1008 (May 20, 1948).

(d) That the characteristics of the warning tone shall be the same as those specified in the Orders of this Commission adopted by it in ''Use of Recording Devices in Connection With Telephone Service,'' Docket 6787; 11 F.C.C. 1033 (1947); 12 F.C.C. 1005 (November 26, 1947); 12 F.C.C. 1008 (May 20, 1948);

(e) That no recording device shall be used unless it can be physically connected to and disconnected from the telephone line or switched on and off.

(Secs. 2, 3, 4, 5, 301, 303, 307, 308, 309, 315, 317; 48 Stat., as amended, 1064, 1065, 1066, 1068, 1081, 1082, 1083, 1084, 1085, 1089; 47 U.S.C. 152, 153, 154, 155, 301, 303, 307, 308, 309, 315, 317)

[32 FR 11275, Aug. 3, 1967, as amended at 46 FR 29480, June 2, 1981; 52 FR 3654, Feb. 5, 1987]

Subpart F—Telecommunications Relay Services and Related Customer Premises Equipment for Persons With Disabilities

AUTHORITY: 47 U.S.C. 151–154; 225, 255, 303(r), 616, and 620.

SOURCE: 56 FR 36731, Aug. 1, 1991, unless otherwise noted.

§ 64.601 Definitions and provisions of general applicability.

(a) For purposes of this subpart, the terms *Public Safety Answering Point (PSAP), statewide default answering point,* and *appropriate local emergency authority* are defined in 47 CFR 64.3000; the terms *pseudo-ANI* and *Wireline E911 Network* are defined in 47 CFR 9.3; the term *affiliate* is defined in 47 CFR 52.12(a)(1)(i), and the terms *majority* and *debt* are defined in 47 CFR 52.12(a)(1)(ii).

(1) *711.* The abbreviated dialing code for accessing relay services anywhere in the United States.

(2) *ACD platform.* The hardware and/or software that comprise the essential call center function of call distribution, and that are a necessary core component of Internet-based TRS.

(3) *American Sign Language (ASL).* A visual language based on hand shape, position, movement, and orientation of the hands in relation to each other and the body.

(4) *ANI.* For 911 systems, the Automatic Number Identification (ANI) identifies the calling party and may be used as the callback number.

(5) *ASCII.* An acronym for American Standard Code for Information Interexchange which employs an eight bit code and can operate at any standard transmission baud rate including 300, 1200, 2400, and higher.

(6) *Authorized provider.* An iTRS provider that becomes the iTRS user's new default provider, having obtained the user's authorization verified in accordance with the procedures specified in this part.

(7) *Baudot.* A seven bit code, only five of which are information bits. Baudot is used by some text telephones to communicate with each other at a 45.5 baud rate.

(8) *Call release.* A TRS feature that allows the CA to sign-off or be ''released'' from the telephone line after the CA has set up a telephone call between the originating TTY caller and a called TTY party, such as when a TTY user must go through a TRS facility to contact another TTY user because the called TTY party can only be reached through a voice-only interface, such as a switchboard.

(9) *Common carrier or carrier.* Any common carrier engaged in interstate Communication by wire or radio as defined in section 3(h) of the Communications Act of 1934, as amended (the Act), and any common carrier engaged in intrastate communication by wire or radio, notwithstanding sections 2(b) and 221(b) of the Act.

(10) *Communications assistant (CA).* A person who transliterates or interprets conversation between two or more end users of TRS. CA supersedes the term ''TDD operator.''

(11) *Default provider.* The iTRS provider that registers and assigns a ten-

digit telephone number to an iTRS user pursuant to § 64.611.

(12) Default provider change order. A request by an iTRS user to an iTRS provider to change the user's default provider.

(13) *Hearing carry over (HCO).* A form of TRS where the person with the speech disability is able to listen to the other end user and, in reply, the CA speaks the text as typed by the person with the speech disability. The CA does not type any conversation. Two-line HCO is an HCO service that allows TRS users to use one telephone line for hearing and the other for sending TTY messages. HCO-to-TTY allows a relay conversation to take place between an HCO user and a TTY user. HCO-to-HCO allows a relay conversation to take place between two HCO users.

(14) *Interconnected VoIP service.* The term ''interconnected VoIP service'' has the meaning given such term under § 9.3 of this chapter, as such section may be amended from time to time.

(15) *Internet-based TRS (iTRS).* A telecommunications relay service (TRS) in which an individual with a hearing or a speech disability connects to a TRS communications assistant using an Internet Protocol-enabled device via the Internet, rather than the public switched telephone network. Internet-based TRS does not include the use of a text telephone (TTY) over an interconnected voice over Internet Protocol service.

(16) *Internet Protocol Captioned Telephone Service (IP CTS).* A telecommunications relay service that permits an individual who can speak but who has difficulty hearing over the telephone to use a telephone and an Internet Protocol-enabled device via the Internet to simultaneously listen to the other party and read captions of what the other party is saying. With IP CTS, the connection carrying the captions between the relay service provider and the relay service user is via the Internet, rather than the public switched telephone network.

(17) *Internet Protocol Relay Service (IP Relay).* A telecommunications relay service that permits an individual with a hearing or a speech disability to communicate in text using an Internet Protocol-enabled device via the Internet, rather than using a text telephone (TTY) and the public switched telephone network.

(18) *IP Relay access technology.* Any equipment, software, or other technology issued, leased, or provided by an Internet-based TRS provider that can be used to make and receive an IP Relay call.

(19) *iTRS access technology.* Any equipment, software, or other technology issued, leased, or provided by an Internet-based TRS provider that can be used to make and receive an Internet-based TRS call.

(20) *Neutral Video Communication Service Platform.* The service platform that allows a registered Internet-based VRS user to use VRS access technology to make and receive VRS and point-to-point calls through a VRS CA service provider. The functions provided by the Neutral Video Communication Service Platform include the provision of a video link, user registration and validation, authentication, authorization, ACD platform functions, routing (including emergency call routing), call setup, mapping, call features (such as call forwarding and video mail), and such other features and functions not provided by the VRS CA service provider.

(21) *New default provider.* An iTRS provider that, either directly or through its numbering partner, initiates or implements the process to become the iTRS user's default provider by replacing the iTRS user's original default provider.

(22) *Non-English language relay service.* A telecommunications relay service that allows persons with hearing or speech disabilities who use languages other than English to communicate with voice telephone users in a shared language other than English, through a CA who is fluent in that language.

(23) *Non-interconnected VoIP service.* The term ''non-interconnected VoIP service''—

(i) Means a service that—

(A) Enables real-time voice communications that originate from or terminate to the user's location using Internet protocol or any successor protocol; and

(B) Requires Internet protocol compatible customer premises equipment; and

(ii) Does not include any service that is an interconnected VoIP service.

(24) *Numbering partner*. Any entity with which an Internet-based TRS provider has entered into a commercial arrangement to obtain North American Numbering Plan telephone numbers.

(25) *Original default provider*. An iTRS provider that is the iTRS user's default provider immediately before that iTRS user's default provider is changed.

(26) *Qualified interpreter*. An interpreter who is able to interpret effectively, accurately, and impartially, both receptively and expressively, using any necessary specialized vocabulary.

(27) Registered Internet-based TRS user. An individual that has registered with a VRS or IP Relay provider as described in § 64.611.

(28) *Registered Location*. The most recent information obtained by a VRS or IP Relay provider that identifies the physical location of an end user.

(29) *Sign language*. A language which uses manual communication and body language to convey meaning, including but not limited to American Sign Language.

(30) *Speech-to-speech relay service (STS)*. A telecommunications relay service that allows individuals with speech disabilities to communicate with voice telephone users through the use of specially trained CAs who understand the speech patterns of persons with speech disabilities and can repeat the words spoken by that person.

(31) *Speed dialing*. A TRS feature that allows a TRS user to place a call using a stored number maintained by the TRS facility. In the context of TRS, speed dialing allows a TRS user to give the CA a short-hand'' name or number for the user's most frequently called telephone numbers.

(32) *Telecommunications relay services (TRS)*. Telephone transmission services that provide the ability for an individual who has a hearing or speech disability to engage in communication by wire or radio with a hearing individual in a manner that is functionally equivalent to the ability of an individual who does not have a hearing or speech disability to communicate using voice communication services by wire or radio. Such term includes services that enable two-way communication between an individual who uses a text telephone or other nonvoice terminal device and an individual who does not use such a device, speech-to-speech services, video relay services and non-English relay services. TRS supersedes the terms ''dual party relay system,'' ''message relay services,'' and ''TDD Relay.''

(33) *Text telephone (TTY)*. A machine that employs graphic communication in the transmission of coded signals through a wire or radio communication system. TTY supersedes the term ''TDD'' or ''telecommunications device for the deaf,'' and TT.

(34) *Three-way calling feature*. A TRS feature that allows more than two parties to be on the telephone line at the same time with the CA.

(35) *TRS Numbering Administrator*. The neutral administrator of the TRS Numbering Directory selected based on a competitive bidding process.

(36) *TRS Numbering Directory*. The database administered by the TRS Numbering Administrator, the purpose of which is to map each registered Internet-based TRS user's NANP telephone number to his or her end device.

(37) *TRS User Registration Database*. A system of records containing TRS user identification data capable of:

(i) Receiving and processing subscriber information sufficient to identify unique TRS users and to ensure that each has a single default provider;

(ii) Assigning each VRS user a unique identifier;

(iii) Allowing VRS providers and other authorized entities to query the TRS User Registration Database to determine if a prospective user already has a default provider;

(iv) Allowing VRS providers to indicate that a VRS user has used the service; and

(v) Maintaining the confidentiality of proprietary data housed in the database by protecting it from theft, loss or disclosure to unauthorized persons. The purpose of this database is to ensure accurate registration and verification of VRS users and improve the efficiency of the TRS program.

(38) *Unauthorized provider*. An iTRS provider that becomes the iTRS user's new default provider without having obtained the user's authorization verified in accordance with the procedures specified in this part.

(39) *Unauthorized change*. A change in an iTRS user's selection of a default provider that was made without authorization verified in accordance with the verification procedures specified in this part.

(40) *Video relay service (VRS)*. A telecommunications relay service that allows people with hearing or speech disabilities who use sign language to communicate with voice telephone users through video equipment. The video link allows the CA to view and interpret the party's signed conversation and relay the conversation back and forth with a voice caller.

(41) *Visual privacy screen*. A screen or any other feature that is designed to prevent one party or both parties on the video leg of a VRS call from viewing the other party during a call.

(42) *Voice carry over (VCO)*. A form of TRS where the person with the hearing disability is able to speak directly to the other end user. The CA types the response back to the person with the hearing disability. The CA does not voice the conversation. Two-line VCO is a VCO service that allows TRS users to use one telephone line for voicing and the other for receiving TTY messages. A VCO-to-TTY TRS call allows a relay conversation to take place between a VCO user and a TTY user. VCO-to-VCO allows a relay conversation to take place between two VCO users.

(43) *VRS access technology*. Any equipment, software, or other technology issued, leased, or provided by an Internet-based TRS provider that can be used to make and receive a VRS call.

(44) *VRS Access Technology Reference Platform*. A software product procured by or on behalf of the Commission that provides VRS functionality, including the ability to make and receive VRS and point-to-point calls, dial-around functionality, and the ability to update user registration location, and against which providers may test their own VRS access technology and platforms for compliance with the Commission's interoperability and portability rules.

(45) *VRS CA service provider*. A VRS provider that uses the Neutral Video Communication Service Platform for the video communication service components of VRS.

(b) For purposes of this subpart, all regulations and requirements applicable to common carriers shall also be applicable to providers of interconnected VoIP service.

[68 FR 50976, Aug. 25, 2003, as amended at 69 FR 53351, Sept. 1, 2004; 72 FR 43559, Aug. 6, 2007; 73 FR 41294, July 18, 2008; 76 FR 24400, May 2, 2011; 76 FR 65969, Oct. 25, 2011; 78 FR 40605, July 5, 2013]

§ 64.602 Jurisdiction.

Any violation of this subpart F by any common carrier engaged in intrastate communication shall be subject to the same remedies, penalties, and procedures as are applicable to a violation of the Act by a common carrier engaged in interstate communication.

[65 FR 38436, June 21, 2000]

§ 64.603 Provision of services.

Each common carrier providing telephone voice transmission services shall provide, not later than July 26, 1993, in compliance with the regulations prescribed herein, throughout the area in which it offers services, telecommunications relay services, individually, through designees, through a competitively selected vendor, or in concert with other carriers. Speech-to-speech relay service and interstate Spanish language relay service shall be provided by March 1, 2001. In addition, each common carrier providing telephone voice transmission services shall provide, not later than October 1, 2001, access via the 711 dialing code to all relay services as a toll free call. A common carrier shall be considered to be in compliance with these regulations:

(a) With respect to intrastate telecommunications relay services in any state that does not have a certified program under § 64.606 and with respect to interstate telecommunications relay services, if such common carrier (or other entity through which the carrier is providing such relay services) is in compliance with § 64.604; or

(b) With respect to intrastate telecommunications relay services in any state that has a certified program under § 64.606 for such state, if such common carrier (or other entity through which the carrier is providing such relay services) is in compliance with the program certified under § 64.606 for such state.

[65 FR 38436, June 21, 2000, as amended at 66 FR 67114, Dec. 28, 2001; 73 FR 21258, Apr. 21, 2008]

§ 64.604 Mandatory minimum standards.

The standards in this section are applicable December 18, 2000, except as stated in paragraphs (c)(2) and (c)(7) of this section.

(a) *Operational standards*—(1) *Communications assistant (CA).* (i) TRS providers are responsible for requiring that all CAs be sufficiently trained to effectively meet the specialized communications needs of individuals with hearing and speech disabilities.

(ii) CAs must have competent skills in typing, grammar, spelling, interpretation of typewritten ASL, and familiarity with hearing and speech disability cultures, languages and etiquette. CAs must possess clear and articulate voice communications.

(iii) CAs must provide a typing speed of a minimum of 60 words per minute. Technological aids may be used to reach the required typing speed. Providers must give oral-to-type tests of CA speed.

(iv) TRS providers are responsible for requiring that VRS CAs are qualified interpreters. A ''qualified interpreter'' is able to interpret effectively, accurately, and impartially, both receptively and expressively, using any necessary specialized vocabulary.

(v) CAs answering and placing a TTY-based TRS or VRS call shall stay with the call for a minimum of ten minutes. CAs answering and placing an STS call shall stay with the call for a minimum of twenty minutes. The minimum time period shall begin to run when the CA reaches the called party. The obligation of the CA to stay with the call shall terminate upon the earlier of:

(A) The termination of the call by one of the parties to the call; or

(B) The completion of the minimum time period.

(vi) TRS providers must make best efforts to accommodate a TRS user's requested CA gender when a call is initiated and, if a transfer occurs, at the time the call is transferred to another CA.

(vii) TRS shall transmit conversations between TTY and voice callers in real time.

(viii) STS providers shall offer STS users the option to have their voices muted so that the other party to the call will hear only the CA and will not hear the STS user's voice.

(2) *Confidentiality and conversation content.* (i) Except as authorized by section 705 of the Communications Act, 47 U.S.C. 605, CAs are prohibited from disclosing the content of any relayed conversation regardless of content, and with a limited exception for STS CAs, from keeping records of the content of any conversation beyond the duration of a call, even if to do so would be inconsistent with state or local law. STS CAs may retain information from a particular call in order to facilitate the completion of consecutive calls, at the request of the user. The caller may request the STS CA to retain such information, or the CA may ask the caller if he wants the CA to repeat the same information during subsequent calls. The CA may retain the information only for as long as it takes to complete the subsequent calls.

(ii) CAs are prohibited from intentionally altering a relayed conversation and, to the extent that it is not inconsistent with federal, state or local law regarding use of telephone company facilities for illegal purposes, must relay all conversation verbatim unless the relay user specifically requests summarization, or if the user requests interpretation of an ASL call. An STS CA may facilitate the call of an STS user with a speech disability so long as the CA does not interfere with the independence of the user, the user maintains control of the conversation, and the user does not object. Appropriate measures must be taken by relay providers to ensure that confidentiality of VRS users is maintained.

(3) *Types of calls.* (i) Consistent with the obligations of telecommunications carrier operators, CAs are prohibited from refusing single or sequential calls or limiting the length of calls utilizing relay services.

(ii) Relay services shall be capable of handling any type of call normally provided by telecommunications carriers unless the Commission determines that it is not technologically feasible to do so. Relay service providers have the burden of proving the infeasibility of handling any type of call.

(iii) Relay service providers are permitted to decline to complete a call because credit authorization is denied.

(iv) Relay services shall be capable of handling pay-per-call calls.

(v) TRS providers are required to provide the following types of TRS calls: (1) Text-to-voice and voice-to-text; (2) VCO, two-line VCO, VCO-to-TTY, and VCO-to-VCO; (3) HCO, two-line HCO, HCO-to-TTY, HCO-to-HCO.

(vi) TRS providers are required to provide the following features: (1) Call releasefunctionality; (2) speed dialing functionality; and (3) three-way calling functionality.

(vii) Voice mail and interactive menus. CAs must alert the TRS user to the presence of a recorded message and interactive menu through a hot key on the CA's terminal. The hot key will send text from the CA to the consumer's TTY indicating that a recording or interactive menu has been encountered. Relay providers shall electronically capture recorded messages and retain them for the length of the call. Relay providers may not impose any charges for additional calls, which must be made by the relay user in order to complete calls involving recorded or interactive messages.

(viii) TRS providers shall provide, as TRS features, answering machine and voice mail retrieval.

(4) Emergency call handling requirements for TTY-based TRS providers. TTY-based TRS providers must use a system for incoming emergency calls that, at a minimum, automatically and immediately transfers the caller to an appropriate Public Safety Answering Point (PSAP). An appropriate PSAP is either a PSAP that the caller would have reached if he had dialed 911 directly, or a PSAP that is capable of enabling the dispatch of emergency services to the caller in an expeditious manner.

(5) *STS called numbers.* Relay providers must offer STS users the option to maintain at the relay center a list of names and telephone numbers which the STS user calls. When the STS user requests one of these names, the CA must repeat the name and state the telephone number to the STS user. This information must be transferred to any new STS provider.

(6) *Visual privacy screens/idle calls.* A VRS CA may not enable a visual privacy screen or similar feature during a VRS call. A VRS CA must disconnect a VRS call if the caller or the called party to a VRS call enables a privacy screen or similar feature for more than five minutes or is otherwise unresponsive or unengaged for more than five minutes, unless the call is a 9–1–1 emergency call or the caller or called party is legitimately placed on hold and is present and waiting for active communications to commence. Prior to disconnecting the call, the CA must announce to both parties the intent to terminate the call and may reverse the decision to disconnect if one of the parties indicates continued engagement with the call.

(7) *International calls.* VRS calls that originate from an international IP address will not be compensated, with the exception of calls made by a U.S. resident who has pre-registered with his or her default provider prior to leaving the country, during specified periods of time while on travel and from specified regions of travel, for which there is an accurate means of verifying the identity and location of such callers. For purposes of this section, an international IP address is defined as one that indicates that the individual initiating the call is located outside the United States.

(b) *Technical standards*—(1) *ASCII and Baudot.* TRS shall be capable of communicating with ASCII and Baudot format, at any speed generally in use.

(2) *Speed of answer.* (i) TRS providers shall ensure adequate TRS facility staffing to provide callers with efficient access under projected calling volumes, so that the probability of a

busy response due to CA unavailability shall be functionally equivalent to what a voice caller would experience in attempting to reach a party through the voice telephone network.

(ii) TRS facilities shall, except during network failure, answer 85% of all calls within 10 seconds by any method which results in the caller's call immediately being placed, not put in a queue or on hold. The ten seconds begins at the time the call is delivered to the TRS facility's network. A TRS facility shall ensure that adequate network facilities shall be used in conjunction with TRS so that under projected calling volume the probability of a busy response due to loop trunk congestion shall be functionally equivalent to what a voice caller would experience in attempting to reach a party through the voice telephone network.

(A) The call is considered delivered when the TRS facility's equipment accepts the call from the local exchange carrier (LEC) and the public switched network actually delivers the call to the TRS facility.

(B) Abandoned calls shall be included in the speed-of-answer calculation.

(C) A TRS provider's compliance with this rule shall be measured on a daily basis.

(D) The system shall be designed to a P.01 standard.

(E) A LEC shall provide the call attempt rates and the rates of calls blocked between the LEC and the TRS facility to relay administrators and TRS providers upon request.

(iii) *Speed of answer requirements for VRS providers.* (A) Speed of answer requirements for VRS providers are phased-in as follows:

(*1*) By January 1, 2007, VRS providers must answer 80% of all VRS calls within 120 seconds, measured on a monthly basis;

(*2*) By January 1, 2014, VRS providers must answer 85% of all VRS calls within 60 seconds, measured on a daily basis; and

(*3*) By July 1, 2014, VRS providers must answer 85% of all VRS calls within 30 seconds, measured on a daily basis. Abandoned calls shall be included in the VRS speed of answer calculation.

(B) VRS CA service providers must meet the speed of answer requirements for VRS providers as measured from the time a VRS call reaches facilities operated by the VRS CA service provider.

(3) *Equal access to interexchange carriers.* TRS users shall have access to their chosen interexchange carrier through the TRS, and to all other operator services, to the same extent that such access is provided to voice users.

(4) *TRS facilities.* (i) TRS shall operate every day, 24 hours a day. Relay services that are not mandated by this Commission need not be provided every day, 24 hours a day, except VRS.

(ii) TRS shall have redundancy features functionally equivalent to the equipment in normal central offices, including uninterruptible power for emergency use.

(iii) A VRS CA may not relay calls from a location primarily used as his or her home.

(iv) A VRS provider leasing or licensing an automatic call distribution (ACD) platform must have a written lease or license agreement. Such lease or license agreement may not include any revenue sharing agreement or compensation based upon minutes of use. In addition, if any such lease is between two eligible VRS providers, the lessee or licensee must locate the ACD platform on its own premises and must utilize its own employees to manage the ACD platform. VRS CA service providers are not required to have a written lease or licensing agreement for an ACD if they obtain that function from the Neutral Video Communication Service Platform.

(5) *Technology.* No regulation set forth in this subpart is intended to discourage or impair the development of improved technology that fosters the availability of telecommunications to person with disabilities. TRS facilities are permitted to use SS7 technology or any other type of similar technology to enhance the functional equivalency and quality of TRS. TRS facilities that utilize SS7 technology shall be subject to the Calling Party Telephone Number rules set forth at 47 CFR 64.1600 *et seq.*

(6) *Caller ID.* When a TRS facility is able to transmit any calling party identifying information to the public

network, the TRS facility must pass through, to the called party, at least one of the following: the number of the TRS facility, 711, or the 10-digit number of the calling party.

(7) *STS 711 Calls.* An STS provider shall, at a minimum, employ the same means of enabling an STS user to connect to a CA when dialing 711 that the provider uses for all other forms of TRS. When a CA directly answers an incoming 711 call, the CA shall transfer the STS user to an STS CA without requiring the STS user to take any additional steps. When an interactive voice response (IVR) system answers an incoming 711 call, the IVR system shall allow for an STS user to connect directly to an STS CA using the same level of prompts as the IVR system uses for all other forms of TRS.

(c) *Functional standards*—(1) *Consumer complaint logs.* (i) States and interstate providers must maintain a log of consumer complaints including all complaints about TRS in the state, whether filed with the TRS provider or the State, and must retain the log until the next application for certification is granted. The log shall include, at a minimum, the date the complaint was filed, the nature of the complaint, the date of resolution, and an explanation of the resolution.

(ii) Beginning July 1, 2002, states and TRS providers shall submit summaries of logs indicating the number of complaints received for the 12-month period ending May 31 to the Commission by July 1 of each year. Summaries of logs submitted to the Commission on July 1, 2001 shall indicate the number of complaints received from the date of OMB approval through May 31, 2001.

(2) *Contact persons.* Beginning on June 30, 2000, State TRS Programs, interstate TRS providers, and TRS providers that have state contracts must submit to the Commission a contact person and/or office for TRS consumer information and complaints about a certified State TRS Program's provision of intrastate TRS, or, as appropriate, about the TRS provider's service. This submission must include, at a minimum, the following:

(i) The name and address of the office that receives complaints, grievances, inquiries, and suggestions;

(ii) Voice and TTY telephone numbers, fax number, e-mail address, and web address; and

(iii) The physical address to which correspondence should be sent.

(3) *Public access to information.* Carriers, through publication in their directories, periodic billing inserts, placement of TRS instructions in telephone directories, through directory assistance services, and incorporation of TTY numbers in telephone directories, shall assure that callers in their service areas are aware of the availability and use of all forms of TRS. Efforts to educate the public about TRS should extend to all segments of the public, including individuals who are hard of hearing, speech disabled, and senior citizens as well as members of the general population. In addition, each common carrier providing telephone voice transmission services shall conduct, not later than October 1, 2001, ongoing education and outreach programs that publicize the availability of 711 access to TRS in a manner reasonably designed to reach the largest number of consumers possible.

(4) *Rates.* TRS users shall pay rates no greater than the rates paid for functionally equivalent voice communication services with respect to such factors as the duration of the call, the time of day, and the distance from the point of origination to the point of termination.

(5) *Jurisdictional separation of costs*—(i) *General.* Where appropriate, costs of providing TRS shall be separated in accordance with the jurisdictional separation procedures and standards set forth in the Commission's regulations adopted pursuant to section 410 of the Communications Act of 1934, as amended.

(ii) *Cost recovery.* Costs caused by interstate TRS shall be recovered from all subscribers for every interstate service, utilizing a shared-funding cost recovery mechanism. Except as noted in this paragraph, with respect to VRS, costs caused by intrastate TRS shall be recovered from the intrastate jurisdiction. In a state that has a certified program under § 64.606, the state agency providing TRS shall, through the state's regulatory agency, permit a

common carrier to recover costs incurred in providing TRS by a method consistent with the requirements of this section. Costs caused by the provision of interstate and intrastate VRS shall be recovered from all subscribers for every interstate service, utilizing a shared-funding cost recovery mechanism.

(iii) *Telecommunications Relay Services Fund.* Effective July 26, 1993, an Interstate Cost Recovery Plan, hereinafter referred to as the TRS Fund, shall be administered by an entity selected by the Commission (administrator). The initial administrator, for an interim period, will be the National Exchange Carrier Association, Inc.

(A) *Contributions.* Every carrier providing interstate telecommunications services (including interconnected VoIP service providers pursuant to § 64.601(b)) and every provider of non-interconnected VoIP service shall contribute to the TRS Fund on the basis of interstate end-user revenues as described herein. Contributions shall be made by all carriers who provide interstate services, including, but not limited to, cellular telephone and paging, mobile radio, operator services, personal communications service (PCS), access (including subscriber line charges), alternative access and special access, packet-switched, WATS, 800, 900, message telephone service (MTS), private line, telex, telegraph, video, satellite, intraLATA, international and resale services.

(B) *Contribution computations.* Contributors' contributions to the TRS fund shall be the product of their subject revenues for the prior calendar year and a contribution factor determined annually by the Commission. The contribution factor shall be based on the ratio between expected TRS Fund expenses to the contributors' revenues subject to contribution. In the event that contributions exceed TRS payments and administrative costs, the contribution factor for the following year will be adjusted by an appropriate amount, taking into consideration projected cost and usage changes. In the event that contributions are inadequate, the fund administrator may request authority from the Commission to borrow funds commercially, with such debt secured by future years' contributions. Each subject contributor that has revenues subject to contribution must contribute at least $25 per year. Contributors whose annual contributions total less than $1,200 must pay the entire contribution at the beginning of the contribution period. Contributors whose contributions total $1,200 or more may divide their contributions into equal monthly payments. Contributors shall complete and submit, and contributions shall be based on, a ''Telecommunications Reporting Worksheet'' (as published by the Commission in the FEDERAL REGISTER). The worksheet shall be certified to by an officer of the contributor, and subject to verification by the Commission or the administrator at the discretion of the Commission. Contributors' statements in the worksheet shall be subject to the provisions of section 220 of the Communications Act of 1934, as amended. The fund administrator may bill contributors a separate assessment for reasonable administrative expenses and interest resulting from improper filing or overdue contributions. The Chief of the Consumer and Governmental Affairs Bureau may waive, reduce, modify or eliminate contributor reporting requirements that prove unnecessary and require additional reporting requirements that the Bureau deems necessary to the sound and efficient administration of the TRS Fund.

(C) *Registration Requirements for Providers of Non-Interconnected VoIP Service—(1)Applicability.* A non-interconnected VoIP service provider that will provide interstate service that generates interstate end-user revenue that is subject to contribution to the Telecommunications Relay Service Fund shall file the registration information described in paragraph (c)(5)(iii)(C)(*2*) of this section in accordance with the procedures described in paragraphs (c)(5)(iii)(C)(*3*) and (c)(5)(iii)(C)(*4*) of this section. Any non-interconnected VoIP service provider already providing interstate service that generates interstate end-user revenue that is subject to contribution to the Telecommunications Relay Service Fund on the effective date of these rules shall submit the relevant portion of its FCC Form 499–A in accordance

with paragraphs (c)(5)(iii)(C)(*2*) and (*3*) of this section.

(*2*) *Information required for purposes of TRS Fund contributions.* A non-interconnected VoIP service provider that is subject to the registration requirement pursuant to paragraph (c)(5)(iii)(C)(*1*) of this section shall provide the following information:

(*i*) The provider's business name(s) and primary address;

(*ii*) The names and business addresses of the provider's chief executive officer, chairman, and president, or, in the event that a provider does not have such executives, three similarly senior-level officials of the provider;

(*iii*) The provider's regulatory contact and/or designated agent;

(*iv*) All names that the provider has used in the past; and

(*v*) The state(s) in which the provider provides such service.

(*3*) *Submission of registration.* A provider that is subject to the registration requirement pursuant to paragraph (c)(5)(iii)(C)(*1*) of this section shall submit the information described in paragraph (c)(5)(iii)(C)(*2*) of this section in accordance with the Instructions to FCC Form 499–A. FCC Form 499–A must be submitted under oath and penalty of perjury.

(*4*) *Changes in information.* A provider must notify the Commission of any changes to the information provided pursuant to paragraph (c)(5)(iii)(C)(*2*) of this section within no more than one week of the change. Providers may satisfy this requirement by filing the relevant portion of FCC Form 499–A in accordance with the Instructions to such form.

(D) *Data collection and audits.* (*1*) TRS providers seeking compensation from the TRS Fund shall provide the administrator with true and adequate data, and other historical, projected and state rate related information reasonably requested to determine the TRS Fund revenue requirements and payments. TRS providers shall provide the administrator with the following: total TRS minutes of use, total interstate TRS minutes of use, total TRS investment in general in accordance with part 32 of this chapter, and other historical or projected information reasonably requested by the administrator for purposes of computing payments and revenue requirements.

(*2*) Call data required from all TRS providers. In addition to the data requested by paragraph (c)(5)(iii)(C)(*1*) of this section, TRS providers seeking compensation from the TRS Fund shall submit the following specific data associated with each TRS call for which compensation is sought:

(*i*) The call record ID sequence;

(*ii*) CA ID number;

(*iii*) Session start and end times noted at a minimum to the nearest second;

(*iv*) Conversation start and end times noted at a minimum to the nearest second;

(*v*) Incoming telephone number and IP address (if call originates with an IP-based device) at the time of the call;

(*vi*) Outbound telephone number (if call terminates to a telephone) and IP address (if call terminates to an IP-based device) at the time of call;

(*vii*) Total conversation minutes;

(*viii*) Total session minutes;

(*ix*) The call center (by assigned center ID number) that handled the call; and

(*x*) The URL address through which the call is initiated.

(*3*) Additional call data required from Internet-based Relay Providers. In addition to the data required by paragraph (c)(5)(iii)(C)(*2*) of this section, Internet-based Relay Providers seeking compensation from the Fund shall submit speed of answer compliance data.

(*4*) Providers submitting call record and speed of answer data in compliance with paragraphs (c)(5)(iii)(C)(*2*) and (c)(5)(iii)(C)(*3*) of this section shall:

(*i*) Employ an automated record keeping system to capture such data required pursuant to paragraph (c)(5)(iii)(C)(*2*) of this section for each TRS call for which minutes are submitted to the fund administrator for compensation; and

(*ii*) Submit such data electronically, in a standardized format. For purposes of this subparagraph, an automated record keeping system is a system that captures data in a computerized and electronic format that does not allow human intervention during the call session for either conversation or session time.

(*5*) *Certification*. The chief executive officer (CEO), chief financial officer (CFO), or other senior executive of a TRS provider with first hand knowledge of the accuracy and completeness of the information provided, when submitting a request for compensation from the TRS Fund must, with each such request, certify as follows:

I swear under penalty of perjury that:

(i) I am _____ (name and title)_____, an officer of the above-named reporting entity and that I have examined the foregoing reports and that all requested information has been provided and all statements of fact, as well as all cost and demand data contained in this Relay Services Data Request, are true and accurate; and

(ii) The TRS calls for which compensation is sought were handled in compliance with Section 225 of the Communications Act and the Commission's rules and orders, and are not the result of impermissible financial incentives or payments to generate calls.

(*6*) *Audits*. The fund administrator and the Commission, including the Office of Inspector General, shall have the authority to examine and verify TRS provider data as necessary to assure the accuracy and integrity of TRS Fund payments. TRS providers must submit to audits annually or at times determined appropriate by the Commission, the fund administrator, or by an entity approved by the Commission for such purpose. A TRS provider that fails to submit to a requested audit, or fails to provide documentation necessary for verification upon reasonable request, will be subject to an automatic suspension of payment until it submits to the requested audit or provides sufficient documentation.

(*7*) *Call data record retention*. Internet-based TRS providers shall retain the data required to be submitted by this section, and all other call detail records, other records that support their claims for payment from the TRS Fund, and records used to substantiate the costs and expense data submitted in the annual relay service data request form, in an electronic format that is easily retrievable, for a minimum of five years.

(E) *Payments to TRS providers*. (*1*) TRS Fund payments shall be distributed to TRS providers based on formulas approved or modified by the Commission. The administrator shall file schedules of payment formulas with the Commission. Such formulas shall be designed to compensate TRS providers for reasonable costs of providing interstate TRS, and shall be subject to Commission approval. Such formulas shall be based on total monthly interstate TRS minutes of use. The formulas should appropriately compensate interstate providers for the provision of TRS, whether intrastate or interstate.

(*2*) TRS minutes of use for purposes of interstate cost recovery under the TRS Fund are defined as the minutes of use for completed interstate TRS calls placed through the TRS center beginning after call set-up and concluding after the last message call unit.

(*3*) In addition to the data required under paragraph (c)(5)(iii)(C) of this section, all TRS providers, including providers who are not interexchange carriers, local exchange carriers, or certified state relay providers, must submit reports of interstate TRS minutes of use to the administrator in order to receive payments.

(*4*) The administrator shall establish procedures to verify payment claims, and may suspend or delay payments to a TRS provider if the TRS provider fails to provide adequate verification of payment upon reasonable request, or if directed by the Commission to do so. The TRS Fund administrator shall make payments only to eligible TRS providers operating pursuant to the mandatory minimum standards as required in this section, and after disbursements to the administrator for reasonable expenses incurred by it in connection with TRS Fund administration. TRS providers receiving payments shall file a form prescribed by the administrator. The administrator shall fashion a form that is consistent with 47 CFR parts 32 and 36 procedures reasonably tailored to meet the needs of TRS providers.

(*5*) The Commission shall have authority to audit providers and have access to all data, including carrier specific data, collected by the fund administrator. The fund administrator shall have authority to audit TRS providers reporting data to the administrator.

(*6*) The administrator shall not be obligated to pay any request for compensation until it has been established as compensable. A request shall be established as compensable only after the administrator, in consultation with the Commission, or the Commission determines that the provider has met its burden to demonstrate that the claim is compensable under applicable Commission rules and the procedures established by the administrator. Any request for compensation for which payment has been suspended or withheld in accordance with paragraph (c)(5)(iii)(L) of this section shall not be established as compensable until the administrator, in consultation with the Commission, or the Commission determines that the request is compensable in accordance with paragraph (c)(5)(iii)(L)(*4*) of this section.

(F) *Eligibility for payment from the TRS Fund.* (*1*) TRS providers, except Internet-based TRS providers, eligible for receiving payments from the TRS Fund must be:

(*i*) TRS facilities operated under contract with and/or by certified state TRS programs pursuant to § 64.606; or

(*ii*) TRS facilities owned or operated under contract with a common carrier providing interstate services operated pursuant to this section; or

(*iii*) Interstate common carriers offering TRS pursuant to this section.

(*2*) Internet-based TRS providers eligible for receiving payments from the TRS fund must be certified by the Commission pursuant to § 64.606.

(G) Any eligible TRS provider as defined in paragraph (c)(5)(iii)(F) of this section shall notify the administrator of its intent to participate in the TRS Fund thirty (30) days prior to submitting reports of TRS interstate minutes of use in order to receive payment settlements for interstate TRS, and failure to file may exclude the TRS provider from eligibility for the year.

(H) Administrator reporting, monitoring, and filing requirements. The administrator shall perform all filing and reporting functions required in paragraphs (c)(5)(iii)(A) through (c)(5)(iii)(J) of this section. TRS payment formulas and revenue requirements shall be filed with the Commission on May 1 of each year, to be effective the following July 1. The administrator shall report annually to the Commission an itemization of monthly administrative costs which shall consist of all expenses, receipts, and payments associated with the administration of the TRS Fund. The administrator is required to keep the TRS Fund separate from all other funds administered by the administrator, shall file a cost allocation manual (CAM) and shall provide the Commission full access to all data collected pursuant to the administration of the TRS Fund. The administrator shall account for the financial transactions of the TRS Fund in accordance with generally accepted accounting principles for federal agencies and maintain the accounts of the TRS Fund in accordance with the United States Government Standard General Ledger. When the administrator, or any independent auditor hired by the administrator, conducts audits of providers of services under the TRS program or contributors to the TRS Fund, such audits shall be conducted in accordance with generally accepted government auditing standards. In administering the TRS Fund, the administrator shall also comply with all relevant and applicable federal financial management and reporting statutes. The administrator shall establish a non-paid voluntary advisory committee of persons from the hearing and speech disability community, TRS users (voice and text telephone), interstate service providers, state representatives, and TRS providers, which will meet at reasonable intervals (at least semi-annually) in order to monitor TRS cost recovery matters. Each group shall select its own representative to the committee. The administrator's annual report shall include a discussion of the advisory committee deliberations.

(I) *Information filed with the administrator.* The Chief Executive Officer (CEO), Chief Financial Officer (CFO), or other senior executive of a provider submitting minutes to the Fund for compensation must, in each instance, certify, under penalty of perjury, that the minutes were handled in compliance with section 225 and the Commission's rules and orders, and are not the

result of impermissible financial incentives or payments to generate calls. The CEO, CFO, or other senior executive of a provider submitting cost and demand data to the TRS Fund administrator shall certify under penalty of perjury that such information is true and correct. The administrator shall keep all data obtained from contributors and TRS providers confidential and shall not disclose such data in company-specific form unless directed to do so by the Commission. Subject to any restrictions imposed by the Chief of the Consumer and Governmental Affairs Bureau, the TRS Fund administrator may share data obtained from carriers with the administrators of the universal support mechanisms (*see* § 54.701 of this chapter), the North American Numbering Plan administration cost recovery (*see* § 52.16 of this chapter), and the long-term local number portability cost recovery (*see* § 52.32 of this chapter). The TRS Fund administrator shall keep confidential all data obtained from other administrators. The administrator shall not use such data except for purposes of administering the TRS Fund, calculating the regulatory fees of interstate common carriers, and aggregating such fee payments for submission to the Commission. The Commission shall have access to all data reported to the administrator, and authority to audit TRS providers. Contributors may make requests for Commission nondisclosure of company-specific revenue information under § 0.459 of this chapter by so indicating on the Telecommunications Reporting Worksheet at the time that the subject data are submitted. The Commission shall make all decisions regarding nondisclosure of company-specific information.

(J) [Reserved]

(K) All parties providing services or contributions or receiving payments under this section are subject to the enforcement provisions specified in the Communications Act, the Americans with Disabilities Act, and the Commission's rules.

(L) *Procedures for the suspension/withholding of payment.* (*1*) The Fund administrator will continue the current practice of reviewing monthly requests for compensation of TRS minutes of use within two months after they are filed with the Fund administrator.

(*2*) If the Fund administrator in consultation with the Commission, or the Commission on its own accord, determines that payments for certain minutes should be withheld, a TRS provider will be notified within two months from the date for the request for compensation was filed, as to why its claim for compensation has been withheld in whole or in part. TRS providers then will be given two additional months from the date of notification to provide additional justification for payment of such minutes of use. Such justification should be sufficiently detailed to provide the Fund administrator and the Commission the information needed to evaluate whether the minutes of use in dispute are compensable. If a TRS provider does not respond, or does not respond with sufficiently detailed information within two months after notification that payment for minutes of use is being withheld, payment for the minutes of use in dispute will be denied permanently.

(*3*) If, the TRS provider submits additional justification for payment of the minutes of use in dispute within two months after being notified that its initial justification was insufficient, the Fund administrator or the Commission will review such additional justification documentation, and may ask further questions or conduct further investigation to evaluate whether to pay the TRS provider for the minutes of use in dispute, within eight months after submission of such additional justification.

(*4*) If the provider meets its burden to establish that the minutes in question are compensable under the Commission's rules, the Fund administrator will compensate the provider for such minutes of use. Any payment by the Commission will not preclude any future action by either the Commission or the U.S. Department of Justice to recover past payments (regardless of whether the payment was the subject of withholding) if it is determined at any time that such payment was for minutes billed to the Commission in violation of the Commission's rules or any other civil or criminal law.

(*5*) If the Commission determines that the provider has not met its burden to demonstrate that the minutes of use in dispute are compensable under the Commission's rules, payment will be permanently denied. The Fund administrator or the Commission will notify the provider of this decision within one year of the initial request for payment.

(M) *Whistleblower protections.* Providers shall not take any reprisal in the form of a personnel action against any current or former employee or contractor who discloses to a designated manager of the provider, the Commission, the TRS Fund administrator or to any Federal or state law enforcement entity, any information that the reporting person reasonably believes evidences known or suspected violations of the Communications Act or TRS regulations, or any other activity that the reporting person reasonably believes constitutes waste, fraud, or abuse, or that otherwise could result in the improper billing of minutes of use to the TRS Fund and discloses that information to a designated manager of the provider, the Commission, the TRS Fund administrator or to any Federal or state law enforcement entity. Providers shall provide an accurate and complete description of these TRS whistleblower protections, including the right to notify the FCC's Office of Inspector General or its Enforcement Bureau, to all employees and contractors, in writing. Providers that already disseminate their internal business policies to its employees in writing (*e.g.* in employee handbooks, policies and procedures manuals, or bulletin board postings—either online or in hard copy) must include an accurate and complete description of these TRS whistleblower protections in those written materials.

(N) In addition to the provisions set forth above, VRS providers shall be subject to the following provisions:

(*1*) *Eligibility for reimbursement from the TRS Fund.* (*i*) Only an eligible VRS provider, as defined in paragraph (c)(5)(iii)(F) of this section, may hold itself out to the general public as providing VRS.

(*ii*) VRS service must be offered under the name by which the eligible VRS provider offering such service became certified and in a manner that clearly identifies that provider of the service. Where a TRS provider also utilizes sub-brands to identify its VRS, each sub-brand must clearly identify the eligible VRS provider. Providers must route all VRS calls through a single URL address used for each name or sub-brand used.

(*iii*) An eligible VRS provider may not contract with or otherwise authorize any third party to provide interpretation services or call center functions (including call distribution, call routing, call setup, mapping, call features, billing, and registration) on its behalf, unless that authorized third party also is an eligible provider, or the eligible VRS provider is a VRS CA service provider and the authorized third party is the provider of the Neutral Video Communication Service Platform, except that a VRS CA service provider may not contract with or otherwise authorize the provider of the Neutral Video Communication Service Platform to perform billing on its behalf.

(*iv*) To the extent that an eligible VRS provider contracts with or otherwise authorizes a third party to provide any other services or functions related to the provision of VRS other than interpretation services or call center functions, that third party must not hold itself out as a provider of VRS, and must clearly identify the eligible VRS provider to the public. To the extent an eligible VRS provider contracts with or authorizes a third party to provide any services or functions related to marketing or outreach, and such services utilize VRS, those VRS minutes are not compensable on a per minute basis from the TRS fund.

(*v*) All third-party contracts or agreements entered into by an eligible provider must be in writing. Copies of such agreements shall be made available to the Commission and to the TRS Fund administrator upon request.

(*2*) *Call center reports.* VRS providers shall file a written report with the Commission and the TRS Fund administrator, on April 1st and October 1st of each year for each call center that handles VRS calls that the provider owns or controls, including centers located

outside of the United States, that includes:

(*i*) The complete street address of the center;

(*ii*) The number of individual CAs and CA managers; and

(*iii*) The name and contact information (phone number and e-mail address) of the manager(s) at the center. VRS providers shall also file written notification with the Commission and the TRS Fund administrator of any change in a center's location, including the opening, closing, or relocation of any center, at least 30 days prior to any such change.

(*3*) *Compensation of CAs.* VRS providers may not compensate, give a preferential work schedule or otherwise benefit a CA in any manner that is based upon the number of VRS minutes or calls that the CA relays, either individually or as part of a group.

(*4*) *Remote training session calls.* VRS calls to a remote training session or a comparable activity will not be compensable from the TRS Fund when the provider submitting minutes for such a call has been involved, in any manner, with such a training session. Such prohibited involvement includes training programs or comparable activities in which the provider or any affiliate or related party thereto, including but not limited to its subcontractors, partners, employees or sponsoring organizations or entities, has any role in arranging, scheduling, sponsoring, hosting, conducting or promoting such programs or activities.

(6) *Complaints*—(i) *Referral of complaint.* If a complaint to the Commission alleges a violation of this subpart with respect to intrastate TRS within a state and certification of the program of such state under § 64.606 is in effect, the Commission shall refer such complaint to such state expeditiously.

(ii) Intrastate complaints shall be resolved by the state within 180 days after the complaint is first filed with a state entity, regardless of whether it is filed with the state relay administrator, a state PUC, the relay provider, or with any other state entity.

(iii) *Jurisdiction of Commission.* After referring a complaint to a state entity under paragraph (c)(6)(i) of this section, or if a complaint is filed directly with a state entity, the Commission shall exercise jurisdiction over such complaint only if:

(A) Final action under such state program has not been taken within:

(*1*) 180 days after the complaint is filed with such state entity; or

(*2*) A shorter period as prescribed by the regulations of such state; or

(B) The Commission determines that such state program is no longer qualified for certification under § 64.606.

(iv) The Commission shall resolve within 180 days after the complaint is filed with the Commission any interstate TRS complaint alleging a violation of section 225 of the Act or any complaint involving intrastate relay services in states without a certified program. The Commission shall resolve intrastate complaints over which it exercises jurisdiction under paragraph (c)(6)(iii) of this section within 180 days.

(v) *Complaint procedures.* Complaints against TRS providers for alleged violations of this subpart may be either informal or formal.

(A) *Informal complaints*—(*1*) *Form.* An informal complaint may be transmitted to the Consumer & Governmental Affairs Bureau by any reasonable means, such as letter, facsimile transmission, telephone (voice/TRS/TTY), Internet e-mail, or some other method that would best accommodate a complainant's hearing or speech disability.

(*2*) *Content.* An informal complaint shall include the name and address of the complainant; the name and address of the TRS provider against whom the complaint is made; a statement of facts supporting the complainant's allegation that the TRS provided it has violated or is violating section 225 of the Act and/or requirements under the Commission's rules; the specific relief or satisfaction sought by the complainant; and the complainant's preferred format or method of response to the complaint by the Commission and the defendant TRS provider (such as letter, facsimile transmission, telephone (voice/TRS/TTY), Internet e-mail, or some other method that would best accommodate the complainant's hearing or speech disability).

(*3*) *Service; designation of agents*. The Commission shall promptly forward any complaint meeting the requirements of this subsection to the TRS provider named in the complaint. Such TRS provider shall be called upon to satisfy or answer the complaint within the time specified by the Commission. Every TRS provider shall file with the Commission a statement designating an agent or agents whose principal responsibility will be to receive all complaints, inquiries, orders, decisions, and notices and other pronouncements forwarded by the Commission. Such designation shall include a name or department designation, business address, telephone number (voice and TTY), facsimile number and, if available, internet e-mail address.

(B) *Review and disposition of informal complaints*. (*1*) Where it appears from the TRS provider's answer, or from other communications with the parties, that an informal complaint has been satisfied, the Commission may, in its discretion, consider the matter closed without response to the complainant or defendant. In all other cases, the Commission shall inform the parties of its review and disposition of a complaint filed under this subpart. Where practicable, this information shall be transmitted to the complainant and defendant in the manner requested by the complainant (e.g., letter, facsmile transmission, telephone (voice/TRS/TTY) or Internet e-mail.

(*2*) A complainant unsatisfied with the defendant's response to the informal complaint and the staff's decision to terminate action on the informal complaint may file a formal complaint with the Commission pursuant to paragraph (c)(6)(v)(C) of this section.

(C) *Formal complaints*. A formal complaint shall be in writing, addressed to the Federal Communications Commission, Enforcement Bureau, Telecommunications Consumer Division, Washington, DC 20554 and shall contain:

(*1*) The name and address of the complainant,

(*2*) The name and address of the defendant against whom the complaint is made,

(*3*) A complete statement of the facts, including supporting data, where available, showing that such defendant did or omitted to do anything in contravention of this subpart, and

(*4*) The relief sought.

(D) *Amended complaints*. An amended complaint setting forth transactions, occurrences or events which have happened since the filing of the original complaint and which relate to the original cause of action may be filed with the Commission.

(E) *Number of copies*. An original and two copies of all pleadings shall be filed.

(F) *Service*. (*1*) Except where a complaint is referred to a state pursuant to § 64.604(c)(6)(i), or where a complaint is filed directly with a state entity, the Commission will serve on the named party a copy of any complaint or amended complaint filed with it, together with a notice of the filing of the complaint. Such notice shall call upon the defendant to satisfy or answer the complaint in writing within the time specified in said notice of complaint.

(*2*) All subsequent pleadings and briefs shall be served by the filing party on all other parties to the proceeding in accordance with the requirements of § 1.47 of this chapter. Proof of such service shall also be made in accordance with the requirements of said section.

(G) *Answers to complaints and amended complaints*. Any party upon whom a copy of a complaint or amended complaint is served under this subpart shall serve an answer within the time specified by the Commission in its notice of complaint. The answer shall advise the parties and the Commission fully and completely of the nature of the defense and shall respond specifically to all material allegations of the complaint. In cases involving allegations of harm, the answer shall indicate what action has been taken or is proposed to be taken to stop the occurrence of such harm. Collateral or immaterial issues shall be avoided in answers and every effort should be made to narrow the issues. Matters alleged as affirmative defenses shall be separately stated and numbered. Any defendant failing to file and serve an answer within the time and in the manner prescribed may be deemed in default.

(H) *Replies to answers or amended answers*. Within 10 days after service of an answer or an amended answer, a complainant may file and serve a reply which shall be responsive to matters contained in such answer or amended answer and shall not contain new matter. Failure to reply will not be deemed an admission of any allegation contained in such answer or amended answer.

(I) *Defective pleadings*. Any pleading filed in a complaint proceeding that is not in substantial conformity with the requirements of the applicable rules in this subpart may be dismissed.

(7) *Treatment of TRS customer information*. Beginning on July 21, 2000, all future contracts between the TRS administrator and the TRS vendor shall provide for the transfer of TRS customer profile data from the outgoing TRS vendor to the incoming TRS vendor. Such data must be disclosed in usable form at least 60 days prior to the provider's last day of service provision. Such data may not be used for any purpose other than to connect the TRS user with the called parties desired by that TRS user. Such information shall not be sold, distributed, shared or revealed in any other way by the relay center or its employees, unless compelled to do so by lawful order.

(8) *Incentives for use of IP CTS*. (i) An IP CTS provider shall not offer or provide to any person or entity that registers to use IP CTS any form of direct or indirect incentives, financial or otherwise, to register for or use IP CTS.

(ii) An IP CTS provider shall not offer or provide to a hearing health professional any direct or indirect incentives, financial or otherwise, that are tied to a consumer's decision to register for or use IP CTS. Where an IP CTS provider offers or provides IP CTS equipment, directly or indirectly, to a hearing health professional, and such professional makes or has the opportunity to make a profit on the sale of the equipment to consumers, such IP CTS provider shall be deemed to be offering or providing a form of incentive tied to a consumer's decision to register for or use IP CTS.

(iii) Joint marketing arrangements between IP CTS providers and hearing health professionals shall be prohibited.

(iv) For the purpose of this paragraph (c)(8), a hearing health professional is any medical or non-medical professional who advises consumers with regard to hearing disabilities.

(v) Any IP CTS provider that does not comply with this paragraph (c)(8) shall be ineligible for compensation for such IP CTS from the TRS Fund.

(9) *IP CTS registration and certification requirements*. (i) IP CTS providers must first obtain the following registration information from each consumer prior to requesting compensation from the TRS Fund for service provided to the consumer. The consumer's full name, date of birth, last four digits of the consumer's social security number, address and telephone number.

(ii) *Self-certification prior to* August 28, 2014. IP CTS providers, in order to be eligible to receive compensation from the TRS Fund for providing IP CTS, also must first obtain a written certification from the consumer, and if obtained prior to August 28, 2014, such written certification shall attest that the consumer needs IP CTS to communicate in a manner that is functionally equivalent to the ability of a hearing individual to communicate using voice communication services. The certification must include the consumer's certification that:

(A) The consumer has a hearing loss that necessitates IP CTS to communicate in a manner that is functionally equivalent to communication by conventional voice telephone users;

(B) The consumer understands that the captioning service is provided by a live communications assistant; and

(C) The consumer understands that the cost of IP CTS is funded by the TRS Fund.

(iii) *Self-certification on or after* August 28, 2014. IP CTS providers must also first obtain from each consumer prior to requesting compensation from the TRS Fund for the consumer, a written certification from the consumer, and if obtained on or after August 28, 2014, such certification shall state that:

(A) The consumer has a hearing loss that necessitates use of captioned telephone service;

(B) The consumer understands that the captioning on captioned telephone service is provided by a live communications assistant who listens to the other party on the line and provides the text on the captioned phone;

(C) The consumer understands that the cost of captioning each Internet protocol captioned telephone call is funded through a federal program; and

(D) The consumer will not permit, to the best of the consumer's ability, persons who have not registered to use Internet protocol captioned telephone service to make captioned telephone calls on the consumer's registered IP captioned telephone service or device.

(iv) The certification required by paragraphs (c)(9)(ii) and (iii) of this section must be made on a form separate from any other agreement or form, and must include a separate consumer signature specific to the certification. Beginning on August 28, 2014, such certification shall be made under penalty of perjury. For purposes of this rule, an electronic signature, defined by the Electronic Signatures in Global and National Commerce Act, 15 U.S.C. 7001 *et seq.*, as an electronic sound, symbol, or process, attached to or logically associated with a contract or other record and executed or adopted by a person with the intent to sign the record, has the same legal effect as a written signature.

(v) *Third-party certification prior to* August 28, 2014. Where IP CTS equipment is or has been obtained by a consumer from an IP CTS provider, directly or indirectly, at no charge or for less than $75 and the consumer was registered in accordance with the requirements of paragraph (c)(9) of this section prior to August 28, 2014, the IP CTS provider must also obtain from each consumer prior to requesting compensation from the TRS Fund for the consumer, written certification provided and signed by an independent third-party professional, except as provided in paragraph (c)(9)(xi) of this section.

(vi) To comply with paragraph (c)(9)(v) of this section, the independent professional providing certification must:

(A) Be qualified to evaluate an individual's hearing loss in accordance with applicable professional standards, and may include, but are not limited to, community-based social service providers, hearing related professionals, vocational rehabilitation counselors, occupational therapists, social workers, educators, audiologists, speech pathologists, hearing instrument specialists, and doctors, nurses and other medical or health professionals;

(B) Provide his or her name, title, and contact information, including address, telephone number, and email address; and

(C) Certify in writing that the IP CTS user is an individual with hearing loss who needs IP CTS to communicate in a manner that is functionally equivalent to telephone service experienced by individuals without hearing disabilities.

(vii) *Third-party certification on or after* August 28, 2014. Where IP CTS equipment is or has been obtained by a consumer from an IP CTS provider, directly or indirectly, at no charge or for less than $75, the consumer (in cases where the equipment was obtained directly from the IP CTS provider) has not subsequently paid $75 to the IP CTS provider for the equipment prior to the date the consumer is registered to use IP CTS, and the consumer is registered in accordance with the requirements of paragraph (c)(9) of this section on or after August 28, 2014, the IP CTS provider must also, prior to requesting compensation from the TRS Fund for service to the consumer, obtain from each consumer written certification provided and signed by an independent third-party professional, except as provided in paragraph (c)(9)(xi) of this section.

(viii) To comply with paragraph (c)(9)(vii) of this section, the independent third-party professional providing certification must:

(A) Be qualified to evaluate an individual's hearing loss in accordance with applicable professional standards, and must be either a physician, audiologist, or other hearing related professional. Such professional shall not have been referred to the IP CTS user, either directly or indirectly, by any provider of TRS or any officer, director, partner, employee, agent, subcontractor, or

sponsoring organization or entity (collectively ''affiliate'') of any TRS provider. Nor shall the third party professional making such certification have any business, family or social relationship with the TRS provider or any affiliate of the TRS provider from which the consumer is receiving or will receive service.

(B) Provide his or her name, title, and contact information, including address, telephone number, and email address.

(C) Certify in writing, under penalty of perjury, that the IP CTS user is an individual with hearing loss that necessitates use of captioned telephone service and that the third party professional understands that the captioning on captioned telephone service is provided by a live communications assistant and is funded through a federal program.

(ix) In instances where the consumer has obtained IP CTS equipment from a local, state, or federal governmental program, the consumer may present documentation to the IP CTS provider demonstrating that the equipment was obtained through one of these programs, in lieu of providing an independent, third-party certification under paragraphs (c)(9)(v) and (vii) of this section.

(x) Each IP CTS provider shall maintain records of any registration and certification information for a period of at least five years after the consumer ceases to obtain service from the provider and shall maintain the confidentiality of such registration and certification information, and may not disclose such registration and certification information or the content of such registration and certification information except as required by law or regulation.

(xi) IP CTS providers must obtain registration information and certification of hearing loss from all IP CTS users who began receiving service prior to March 7, 2013, within 180 days following August 28, 2014. Notwithstanding any other provision of paragraph (c)(9) of this section, IP CTS providers shall be compensated for compensable minutes of use generated prior to February 24, 2015 by any such users, but shall not receive compensation for minutes of IP CTS use generated on or after February 24, 2015 by any IP CTS user who has not been registered.

(10) *IP CTS settings*. Each IP CTS provider shall ensure that each IP CTS telephone they distribute, directly or indirectly, shall include a button, icon, or other comparable feature that is easily operable and requires only one step for the consumer to turn on captioning.

(11) (i) [Reserved]

(ii) No person shall use IP CTS equipment or software with the captioning on, unless:

(A) Such person is registered to use IP CTS pursuant to paragraph (c)(9) of this section; or

(B) Such person was an existing IP CTS user as of March 7, 2013, and either paragraph (c)(9)(xi) of this section is not yet in effect or the registration deadline in paragraph (c)(9)(xi) of this section has not yet passed.

(iii) IP CTS providers shall ensure that any newly distributed IP CTS equipment has a label on its face in a conspicuous location with the following language in a clearly legible font: ''FEDERAL LAW PROHIBITS ANYONE BUT REGISTERED USERS WITH HEARING LOSS FROM USING THIS DEVICE WITH THE CAPTIONS ON.'' For IP CTS equipment already distributed to consumers by any IP CTS provider as of July 11, 2014, such provider shall, no later than August 11, 2014, distribute to consumers equipment labels with the same language as mandated by this paragraph for newly distributed equipment, along with clear and specific instructions directing the consumer to attach such labels to the face of their IP CTS equipment in a conspicuous location. For software applications on mobile phones, laptops, tablets, computers or other similar devices, IP CTS providers shall ensure that, each time the consumer logs into the application, the notification language required by this paragraph appears in a conspicuous location on the device screen immediately after log-in.

(iv) IP CTS providers shall maintain, with each consumer's registration records, records describing any IP CTS equipment provided, directly or indirectly, to such consumer, stating the

amount paid for such equipment, and stating whether the label required by paragraph (c)(11)(iii) of this section was affixed to such equipment prior to its provision to the consumer. For consumers to whom IP CTS equipment was provided directly or indirectly prior to the effective date of this paragraph (c)(11), such records shall state whether and when the label required by paragraph (c)(11)(iii) of this section was distributed to such consumer. Such records shall be maintained for a minimum period of five years after the consumer ceases to obtain service from the provider.

(12) *Discrimination and preferences.* A VRS provider shall not:

(i) Directly or indirectly, by any means or device, engage in any unjust or unreasonable discrimination related to practices, facilities, or services for or in connection with like relay service,

(ii) Engage in or give any undue or unreasonable preference or advantage to any particular person, class of persons, or locality, or

(ii) Subject any particular person, class of persons, or locality to any undue or unreasonable prejudice or disadvantage.

(13) *Unauthorized and unnecessary use of VRS.* A VRS provider shall not engage in any practice that causes or encourages, or that the provider knows or has reason to know will cause or encourage:

(i) False or unverified claims for TRS Fund compensation,

(ii) Unauthorized use of VRS,

(iii) The making of VRS calls that would not otherwise be made, or

(iv) The use of VRS by persons who do not need the service in order to communicate in a functionally equivalent manner. A VRS provider shall not seek payment from the TRS Fund for any minutes of service it knows or has reason to know are resulting from such practices. Any VRS provider that becomes aware of such practices being or having been committed by any person shall as soon as practicable report such practices to the Commission or the TRS Fund administrator.

(d) *Other standards.* The applicable requirements of §§ 64.605, 64.611, 64.615, 64.617, 64.621, 64.631, 64.632, 64.5105, 64.5107, 64.5108, 64.5109, and 64.5110 of this part are to be considered mandatory minimum standards.

[65 FR 38436, June 21, 2000]

EDITORIAL NOTE: For FEDERAL REGISTER citations affecting § 64.604, see the List of CFR Sections Affected, which appears in the Finding Aids section of the printed volume and at *www.fdsys.gov*.

EFFECTIVE DATE NOTE: At 78 FR 40607, July 5 2013, § 64.604 was amended by adding paragraph (c)(13). This paragraph contains information collection and recordkeeping requirements and will not become effective until approval has been given by the Office of Management and Budget.

§ 64.605 Emergency calling requirements.

(a) *Additional emergency calling requirements applicable to internet-based TRS providers.* (1) As of December 31, 2008, the requirements of paragraphs (a)(2)(i) and (a)(2)(iv) of this section shall not apply to providers of VRS and IP Relay to which § 64.605(b) applies.

(2) Each provider of Internet-based TRS shall:

(i) Accept and handle emergency calls and access, either directly or via a third party, a commercially available database that will allow the provider to determine an appropriate PSAP, designated statewide default answering point, or appropriate local emergency authority that corresponds to the caller's location, and to relay the call to that entity;

(ii) Implement a system that ensures that the provider answers an incoming emergency call before other non-emergency calls (*i.e.*, prioritize emergency calls and move them to the top of the queue);

(iii) Request, at the beginning of each emergency call, the caller's name and location information, unless the Internet-based TRS provider already has, or has access to, a Registered Location for the caller;

(iv) Deliver to the PSAP, designated statewide default answering point, or appropriate local emergency authority, at the outset of the outbound leg of an emergency call, at a minimum, the name of the relay user and location of the emergency, as well as the name of the relay provider, the CA's callback number, and the CA's identification

number, thereby enabling the PSAP, designated statewide default answering point, or appropriate local emergency authority to re-establish contact with the CA in the event the call is disconnected;

(v) In the event one or both legs of an emergency call are disconnected (*i.e.*, either the call between the TRS user and the CA, or the outbound voice telephone call between the CA and the PSAP, designated statewide default answering point, or appropriate local emergency authority), immediately re-establish contact with the TRS user and/or the appropriate PSAP, designated statewide default answering point, or appropriate local emergency authority and resume handling the call; and

(vi) Ensure that information obtained as a result of this section is limited to that needed to facilitate 911 services, is made available only to emergency call handlers and emergency response or law enforcement personnel, and is used for the sole purpose of ascertaining a user's location in an emergency situation or for other emergency or law enforcement purposes.

(b) *E911 Service for VRS and IP Relay*—(1) *Scope*. The following requirements are only applicable to providers of VRS or IP Relay. Further, the following requirements apply only to 911 calls placed by registered users whose Registered Location is in a geographic area served by a Wireline E911 Network and is available to the provider handling the call.

(2) *E911 Service*. As of December 31, 2008:

(i) VRS or IP Relay providers must, as a condition of providing service to a user, provide that user with E911 service as described in this section;

(ii) VRS or IP Relay providers must transmit all 911 calls, as well as ANI, the caller's Registered Location, the name of the VRS or IP Relay provider, and the CA's identification number for each call, to the PSAP, designated statewide default answering point, or appropriate local emergency authority that serves the caller's Registered Location and that has been designated for telecommunications carriers pursuant to § 64.3001 of this chapter, provided that ''all 911 calls'' is defined as ''any communication initiated by an VRS or IP Relay user dialing 911'';

(iii) All 911 calls must be routed through the use of ANI and, if necessary, pseudo-ANI, via the dedicated Wireline E911 Network; and

(iv) The Registered Location, the name of the VRS or IP Relay provider, and the CA's identification number must be available to the appropriate PSAP, designated statewide default answering point, or appropriate local emergency authority from or through the appropriate automatic location information (ALI) database.

(3) *Service level obligation*. Notwithstanding the provisions in paragraph (b)(2) of this section, if a PSAP, designated statewide default answering point, or appropriate local emergency authority is not capable of receiving and processing either ANI or location information, a VRS or IP Relay provider need not provide such ANI or location information; however, nothing in this paragraph affects the obligation under paragraph (c) of this section of a VRS or IP Relay provider to transmit via the Wireline E911 Network all 911 calls to the PSAP, designated statewide default answering point, or appropriate local emergency authority that serves the caller's Registered Location and that has been designated for telecommunications carriers pursuant to § 64.3001 of this chapter.

(4) *Registered location requirement*. As of December 31, 2008, VRS and IP Relay providers must:

(i) Obtain from each Registered Internet-based TRS User, prior to the initiation of service, the physical location at which the service will first be utilized; and

(ii) If the VRS or IP Relay is capable of being used from more than one location, provide their registered Internet-based TRS users one or more methods of updating their Registered Location, including at least one option that requires use only of the iTRS access technology necessary to access the VRS or IP Relay. Any method utilized must allow a registered Internet-based TRS user to update the Registered Location at will and in a timely manner.

[73 FR 41294, July 18, 2008, as amended at 73 FR 79696, Dec. 30, 2008; 78 FR 40608, July 5, 2013]

§ 64.606 Internet-based TRS provider and TRS program certification.

(a) *Documentation*—(1) *Certified state program.* Any state, through its office of the governor or other delegated executive office empowered to provide TRS, desiring to establish a state program under this section shall submit, not later than October 1, 1992, documentation to the Commission addressed to the Federal Communications Commission, Chief, Consumer & Governmental Affairs Bureau, TRS Certification Program, Washington, DC 20554, and captioned ''TRS State Certification Application.'' All documentation shall be submitted in narrative form, shall clearly describe the state program for implementing intrastate TRS, and the procedures and remedies for enforcing any requirements imposed by the state program. The Commission shall give public notice of states filing for certification including notification in the FEDERAL REGISTER.

(2) *Internet-based TRS provider.* Any entity desiring to provide Internet-based TRS and to receive compensation from the Interstate TRS Fund, shall submit documentation to the Commission addressed to the Federal Communications Commission, Chief, Consumer and Governmental Affairs Bureau, TRS Certification Program, Washington, DC 20554, and captioned ''Internet-based TRS Certification Application.'' The documentation shall include, in narrative form:

(i) A description of the forms of Internet-based TRS to be provided (*i.e.,* VRS, IP Relay, and/or IP captioned telephone relay service);

(ii) A detailed description of how the applicant will meet all non-waived mandatory minimum standards applicable to each form of TRS offered, including documentary and other evidence, and in the case of VRS, such documentary and other evidence shall demonstrate that the applicant leases, licenses or has acquired its own facilities and operates such facilities associated with TRS call centers and employs communications assistants, on a full or part-time basis, to staff such call centers at the date of the application. Such evidence shall include, but not be limited to:

(A) In the case of VRS applicants or providers,

(*1*) Operating five or fewer call centers within the United States, a copy of each deed or lease for each call center operated by the applicant within the United States;

(*2*) Operating more than five call centers within the United States, a copy of each deed or lease for a representative sampling (taking into account size (by number of communications assistants) and location) of five call centers operated by the applicant within the United States, together with a list of all other call centers that they operate that includes the information required under § 64.604(c)(5)(iii)(N)(*2*);

(*3*) Operating call centers outside of the United States, a copy of each deed or lease for each call center operated by the applicant outside of the United States;

(*4*) A description of the technology and equipment used to support their call center functions—including, but not limited to, automatic call distribution, routing, call setup, mapping, call features, billing for compensation from the TRS Fund, and registration—and for each core function of each call center for which the applicant must provide a copy of technology and equipment proofs of purchase, leases or license agreements in accordance with paragraphs (a)(2)(ii)(A)(*5*) through (*7*) of this section, a statement whether such technology and equipment is owned, leased or licensed (and from whom if leased or licensed);

(*5*) Operating five or fewer call centers within the United States, a copy of each proof of purchase, lease or license agreement for all technology and equipment used to support their call center functions for each call center operated by the applicant within the United States;

(*6*) Operating more than five call centers within the United States, a copy of each proof of purchase, lease or license agreement for technology and equipment used to support their call center functions for a representative sampling (taking into account size (by number of communications assistants) and location) of five call centers operated by the applicant within the United States; a copy of each proof of purchase, lease

or license agreement for technology and equipment used to support their call center functions for all call centers operated by the applicant within the United States must be retained by the applicant for three years from the date of the application, and submitted to the Commission upon request;

(*7*) Operating call centers outside of the United States, a copy of each proof of purchase, lease or license agreement for all technology and equipment used to support their call center functions for each call center operated by the applicant outside of the United States; and

(*8*) A complete copy of each lease or license agreement for automatic call distribution.

(B) For all applicants, a list of individuals or entities that hold at least a 10 percent equity interest in the applicant, have the power to vote 10 percent or more of the securities of the applicant, or exercise de jure or de facto control over the applicant, a description of the applicant's organizational structure, and the names of its executives, officers, members of its board of directors, general partners (in the case of a partnership), and managing members (in the case of a limited liability company);

(C) For all applicants, a list of the number of applicant's full-time and part-time employees involved in TRS operations, including and divided by the following positions: executives and officers; video phone installers (in the case of VRS), communications assistants, and persons involved in marketing and sponsorship activities;

(D) For all applicants, copies of employment agreements for all of the provider's employees directly involved in TRS operations, executives, and communications assistants, and a list of names of employees directly involved in TRS operations, need not be submitted with the application, but must be retained by the applicant for five years from the date of application, and submitted to the Commission upon request; and

(E) For all applicants, a list of all sponsorship arrangements relating to Internet-based TRS, including on that list a description of any associated written agreements; copies of all such arrangements and agreements must be retained by the applicant for three years from the date of the application, and submitted to the Commission upon request;

(F) In the case of applicants to provide IP CTS or IP CTS providers, a description of measures taken by such applicants or providers to ensure that they do not and will not request or collect payment from the TRS Fund for service to consumers who do not satisfy the registration and certification requirements in § 64.604(c)(9), and an explanation of how these measures provide such assurance.

(iii) A description of the provider's complaint procedures; and

(iv) A statement that the provider will file annual compliance reports demonstrating continued compliance with these rules.

(v) The chief executive officer (CEO), chief financial officer (CFO), or other senior executive of an applicant for Internet-based TRS certification under this section with first hand knowledge of the accuracy and completeness of the information provided, when submitting an application for certification under paragraph (a)(2) of this section, must certify as follows: I swear under penalty of perjury that I am _____(name and title), _____an officer of the above-named applicant, and that I have examined the foregoing submissions, and that all information required under the Commission's rules and orders has been provided and all statements of fact, as well as all documentation contained in this submission, are true, accurate, and complete.

(3) *Assessment of internet-based TRS provider certification application.* In order to assess the merits of a certification application submitted by an Internet-based TRS provider, the Commission may conduct one or more on-site visits of the applicant's premises, to which the applicant must consent.

(4) For the purposes of paragraphs (a)(2)(ii)(A)(*4*) and (a)(2)(ii)(A)(*6*) of this section, VRS CA Service Providers shall, in their description of the technology and equipment used to support their call center functions, describe:

(i) How they provide connectivity to the Neutral Video Communication Service Platform; and

(ii) How they internally route calls to CAs and then back to the Neutral Video Communication Service Platform. VRS CA service providers need not describe ACD platform functionality if it is not used for these purposes.

(b)(1) *Requirements for state certification.* After review of state documentation, the Commission shall certify, by letter, or order, the state program if the Commission determines that the state certification documentation:

(i) Establishes that the state program meets or exceeds all operational, technical, and functional minimum standards contained in § 64.604;

(ii) Establishes that the state program makes available adequate procedures and remedies for enforcing the requirements of the state program, including that it makes available to TRS users informational materials on state and Commission complaint procedures sufficient for users to know the proper procedures for filing complaints; and

(iii) Where a state program exceeds the mandatory minimum standards contained in § 64.604, the state establishes that its program in no way conflicts with federal law.

(2) *Requirements for Internet-based TRS Provider FCC certification.* After review of certification documentation, the Commission shall certify, by Public Notice, that the Internet-based TRS provider is eligible for compensation from the Interstate TRS Fund if the Commission determines that the certification documentation:

(i) Establishes that the provision of Internet-based TRS will meet or exceed all non-waived operational, technical, and functional minimum standards contained in § 64.604;

(ii) Establishes that the Internet-based TRS provider makes available adequate procedures and remedies for ensuring compliance with the requirements of this section and the mandatory minimum standards contained in § 64.604, including that it makes available for TRS users informational materials on complaint procedures sufficient for users to know the proper procedures for filing complaints.

(c)(1) *State certification period.* State certification shall remain in effect for five years. One year prior to expiration of certification, a state may apply for renewal of its certification by filing documentation as prescribed by paragraphs (a) and (b) of this section.

(2) *Internet-based TRS Provider FCC certification period.* Certification granted under this section shall remain in effect for five years. An Internet-based TRS provider applying for renewal of its certification must file documentation with the Commission containing the information described in paragraph (a)(2) of this section at least 90 days prior to expiration of its certification.

(d) *Method of funding.* Except as provided in § 64.604, the Commission shall not refuse to certify a state program based solely on the method such state will implement for funding intrastate TRS, but funding mechanisms, if labeled, shall be labeled in a manner that promote national understanding of TRS and do not offend the public.

(e)(1) *Suspension or revocation of state certification.* The Commission may suspend or revoke such certification if, after notice and opportunity for hearing, the Commission determines that such certification is no longer warranted. In a state whose program has been suspended or revoked, the Commission shall take such steps as may be necessary, consistent with this subpart, to ensure continuity of TRS. The Commission may, on its own motion, require a certified state program to submit documentation demonstrating ongoing compliance with the Commission's minimum standards if, for example, the Commission receives evidence that a state program may not be in compliance with the minimum standards.

(2) *Suspension or revocation of Internet-based TRS Provider FCC certification.* The Commission may suspend or revoke the certification of an Internet-based TRS provider if, after notice and opportunity for hearing, the Commission determines that such certification is no longer warranted. The Commission may, on its own motion, require a certified Internet-based TRS provider

to submit documentation demonstrating ongoing compliance with the Commission's minimum standards if, for example, the Commission receives evidence that a certified Internet-based TRS provider may not be in compliance with the minimum standards.

(f) *Notification of substantive change.* (1) States must notify the Commission of substantive changes in their TRS programs within 60 days of when they occur, and must certify that the state TRS program continues to meet federal minimum standards after implementing the substantive change.

(2) VRS and IP Relay providers certified under this section must notify the Commission of substantive changes in their TRS programs, services, and features within 60 days of when such changes occur, and must certify that the interstate TRS provider continues to meet Federal minimum standards after implementing the substantive change. Substantive changes shall include, but not be limited to:

(i) The use of new equipment or technologies to facilitate the manner in which relay services are provided;

(ii) Providing services from a new facility not previously identified to the Commission or the Fund administrator; and

(iii) Discontinuation of service from any facility.

(g) Internet-based TRS providers certified under this section shall file with the Commission, on an annual basis, a report demonstrating that they are in compliance with § 64.604.

(1) Such reports must update the information required in paragraph (a)(2) of this section and include updated documentation and a summary of the updates, or certify that there are no changes to the information and documentation submitted with the application for certification, application for renewal of certification, or the most recent annual report, as applicable.

(2) The chief executive officer (CEO), chief financial officer (CFO), or other senior executive of an Internet-based TRS provider under this section with first hand knowledge of the accuracy and completeness of the information provided, when submitting an annual report under paragraph (g) of this section, must, with each such submission, certify as follows:

> I swear under penalty of perjury that I am _____ (name and title), an officer of the above-named reporting entity, and that I have examined the foregoing submissions, and that all information required under the Commission's rules and orders has been provided and all statements of fact, as well as all documentation contained in this submission, are true, accurate, and complete.

(3) Each VRS provider shall include within its annual report a compliance plan describing the provider's policies, procedures, and practices for complying with the requirements of § 64.604(c)(13) of this subpart. Such compliance plan shall include, at a minimum:

(i) Identification of any officer(s) or managerial employee(s) responsible for ensuring compliance with § 64.604(c)(13) of this subpart;

(ii) A description of any compliance training provided to the provider's officers, employees, and contractors;

(iii) Identification of any telephone numbers, Web site addresses, or other mechanisms available to employees for reporting abuses;

(iv) A description of any internal audit processes used to ensure the accuracy and completeness of minutes submitted to the TRS Fund administrator; and

(v) A description of all policies and practices that the provider is following to prevent waste, fraud, and abuse of the TRS Fund. A provider that fails to file a compliance plan shall not be entitled to compensation for the provision of VRS during the period of noncompliance.

(4) If, at any time, the Commission determines that a VRS provider's compliance plan currently on file is inadequate to prevent waste, fraud, and abuse of the TRS Fund, the Commission shall so notify the provider, shall explain the reasons the plan is inadequate, and shall direct the provider to correct the identified defects and submit an amended compliance plan reflecting such correction within a specified time period not to exceed 60 days. A provider that fails to comply with such directive shall not be entitled to compensation for the provision of VRS

during the period of noncompliance. A submitted compliance plan shall not be prima facie evidence of the plan's adequacy; nor shall it be evidence that the provider has fulfilled its obligations under § 64.604(c)(13) of this subpart.

(h) *Unauthorized service interruptions.* (1) Each certified VRS provider must provide Internet-based TRS without unauthorized voluntary service interruptions.

(2) A VRS provider seeking to voluntarily interrupt service for a period of 30 minutes or more in duration must first obtain Commission authorization by submitting a written request to the Commission's Consumer and Governmental Affairs Bureau (CGB) at least 60 days prior to any planned service interruption, with detailed information of:

(i) Its justification for such interruption;

(ii) Its plan to notify customers about the impending interruption; and

(iii) Its plans for resuming service, so as to minimize the impact of such disruption on consumers through a smooth transition of temporary service to another provider, and restoration of its service at the completion of such interruption. CGB will grant or deny such a request and provide a response to the provider at least 35 days prior to the proposed interruption, in order to afford an adequate period of notification to consumers. In evaluating such a request, CGB will consider such factors as the length of time of the proposed interruption, the reason for such interruption, the frequency with which such requests have been made by the provider in the past, the potential impact of the interruption on consumers, and the provider's plans for a smooth service restoration.

(3) In the event of an unforeseen service interruption due to circumstances beyond an Internet-based TRS service provider's control, or in the event of a VRS provider's voluntary service interruption of less than 30 minutes in duration, the provider must submit a written notification to CGB within two business days of the commencement of the service interruption, with an explanation of when and how the provider has restored service or the provider's plan to do so imminently. In the event the provider has not restored service at the time such report is filed, the provider must submit a second report within two business days of the restoration of service with an explanation of when and how the provider has restored service. The provider also must provide notification of service outages covered by this paragraph to consumers on an accessible Web site, and that notification of service status must be updated in a timely manner.

(4) A VRS provider that fails to obtain prior Commission authorization for a voluntary service interruption or fails to provide written notification after a voluntary service interruption of less than 30 minutes in duration, or an Internet-based TRS provider that fails to provide written notification after the commencement of an unforeseen service interruption due to circumstances beyond the provider's control in accordance with this subsection, may be subject to revocation of certification, suspension of payment from the TRS Fund, or other enforcement action by the Commission, as appropriate.

[70 FR 76215, Dec. 23, 2005. Redesignated at 73 FR 21259, Apr. 21, 2008; 76 FR 24402, May 2, 2011; 76 FR 47474, 47477, Aug. 5, 2011; 76 FR 67073, Oct. 31, 2011;77 FR 33662, June 7, 2012; 78 FR 40608, July 5, 2013; 78 FR 53694, Aug. 30, 2013]

EFFECTIVE DATE NOTES: At 78 FR 40608, July 5, 2013, § 64.606 was amended by adding paragraphs (a)(4), (g)(3), and (g)(4). These paragraphs contain information collection and recordkeeping requirements and will not become effective until approval has been given by the Office of Management and Budget.

§ 64.607 Furnishing related customer premises equipment.

(a) Any communications common carrier may provide, under tariff, customer premises equipment (other than hearing aid compatible telephones as defined in part 68 of this chapter, needed by persons with hearing, speech, vision or mobility disabilities. Such equipment may be provided to persons with those disabilities or to associations or institutions who require such equipment regularly to communicate with persons with disabilities. Examples of such equipment include, but are not limited to, artificial larynxes, bone conductor receivers and TTs.

(b) Any carrier which provides telecommunications devices for persons with hearing and/or speech disabilities, whether or not pursuant to tariff, shall respond to any inquiry concerning:

(1) The availability (including general price levels) of TTs using ASCII, Baudot, or both formats; and

(2) The compatibility of any TT with other such devices and computers.

[56 FR 36731, Aug. 1, 1991, as amended at 72 FR 43560, Aug. 6, 2007; 73 FR 21252, Apr. 21, 2008. Redesignated at 73 FR 21259, Apr. 21, 2008]

§ 64.608 Provision of hearing aid compatible telephones by exchange carriers.

In the absence of alternative suppliers in an exchange area, an exchange carrier must provide a hearing aid compatible telephone, as defined in § 68.316 of this chapter, and provide related installation and maintenance services for such telephones on a detariffed basis to any customer with a hearing disability who requests such equipment or services.

[61 FR 42185, Aug. 14, 1996. Redesignated at 73 FR 21259, Apr. 21, 2008]

§ 64.609 Enforcement of related customer premises equipment rules.

Enforcement of §§ 64.607 and 64.608 is delegated to those state public utility or public service commissions which adopt those sections and provide for their enforcement. Subpart G—Furnishing of Enhanced Services and Customer-Premises Equipment by Communications Common Carriers

[56 FR 36731, Aug. 1, 1991. Redesignated and amended at 73 FR 21259, Apr. 21, 2008]

§ 64.610 Establishment of a National Deaf-Blind Equipment Distribution Program.

(a) The National Deaf-Blind Equipment Distribution Program (NDBEDP) is established as a pilot program to distribute specialized customer premises equipment (CPE) used for telecommunications service, Internet access service, and advanced communications, including interexchange services and advanced telecommunications and information services, to low-income individuals who are deaf-blind. The duration of this pilot program will be two years, with a Commission option to extend such program for an additional year.

(b) *Certification to receive funding.* For each state, the Commission will certify a single program as the sole authorized entity to participate in the NDBEDP and receive reimbursement for its program's activities from the Interstate Telecommunications Relay Service Fund (TRS Fund). Such entity will have full oversight and responsibility for distributing equipment and providing related services in that state, either directly or through collaboration, partnership, or contract with other individuals or entities in-state or out-of-state, including other NDBEDP certified programs.

(1) Any state with an equipment distribution program (EDP) may have its EDP apply to the Commission for certification as the sole authorized entity for the state to participate in the NDBEDP and receive reimbursement for its activities from the TRS Fund.

(2) Other public programs, including, but not limited to, vocational rehabilitation programs, assistive technology programs, or schools for the deaf, blind or deaf-blind; or private entities, including but not limited to, organizational affiliates, independent living centers, or private educational facilities, may apply to the Commission for certification as the sole authorized entity for the state to participate in the NDBEDP and receive reimbursement for its activities from the TRS Fund.

(3) The Commission shall review applications and determine whether to grant certification based on the ability of a program to meet the following qualifications, either directly or in coordination with other programs or entities, as evidenced in the application and any supplemental materials, including letters of recommendation:

(i) Expertise in the field of deaf-blindness, including familiarity with the culture and etiquette of people who are deaf-blind, to ensure that equipment distribution and the provision of related services occurs in a manner that is relevant and useful to consumers who are deaf-blind;

(ii) The ability to communicate effectively with people who are deaf-blind (for training and other purposes), by

among other things, using sign language, providing materials in Braille, ensuring that information made available online is accessible, and using other assistive technologies and methods to achieve effective communication;

(iii) Staffing and facilities sufficient to administer the program, including the ability to distribute equipment and provide related services to eligible individuals throughout the state, including those in remote areas;

(iv) Experience with the distribution of specialized CPE, especially to people who are deaf-blind;

(v) Experience in how to train users on how to use the equipment and how to set up the equipment for its effective use; and

(vi) Familiarity with the telecommunications, Internet access, and advanced communications services that will be used with the distributed equipment.

(c) *Definitions*. For purposes of this section, the following definitions shall apply:

(1) *Equipment*. Hardware, software, and applications, whether separate or in combination, mainstream or specialized, needed by an individual who is deaf-blind to achieve access to telecommunications service, Internet access service, and advanced communications, including interexchange services and advanced telecommunications and information services, as these services have been defined by the Communications Act.

(2) *Individual who is deaf-blind*. (i) Any person:

(A) Who has a central visual acuity of 20/200 or less in the better eye with corrective lenses, or a field defect such that the peripheral diameter of visual field subtends an angular distance no greater than 20 degrees, or a progressive visual loss having a prognosis leading to one or both these conditions;

(B) Who has a chronic hearing impairment so severe that most speech cannot be understood with optimum amplification, or a progressive hearing loss having a prognosis leading to this condition; and

(C) For whom the combination of impairments described in clauses (c)(2)(i)(A) and (B) of this section cause extreme difficulty in attaining independence in daily life activities, achieving psychosocial adjustment, or obtaining a vocation.

(ii) The definition in this paragraph also includes any individual who, despite the inability to be measured accurately for hearing and vision loss due to cognitive or behavioral constraints, or both, can be determined through functional and performance assessment to have severe hearing and visual disabilities that cause extreme difficulty in attaining independence in daily life activities, achieving psychosocial adjustment, or obtaining vocational objectives. An applicant's functional abilities with respect to using telecommunications, Internet access, and advanced communications services in various environments shall be considered when determining whether the individual is deaf-blind under clauses (c)(2)(i)(B) and (C) of this section.

(d) *Eligibility criteria* (1) *Verification of disability*. Individuals claiming eligibility under the NDBEDP must provide verification of disability from a professional with direct knowledge of the individual's disability.

(i) Such professionals may include, but are not limited to, community-based service providers, vision or hearing related professionals, vocational rehabilitation counselors, educators, audiologists, speech pathologists, hearing instrument specialists, and medical or health professionals.

(ii) Such professionals must attest, either to the best of their knowledge or under penalty of perjury, that the applicant is an individual who is deaf-blind (as defined in 47 CFR 64.610(b)). Such professionals may also include, in the attestation, information about the individual's functional abilities to use telecommunications, Internet access, and advanced communications services in various settings.

(iii) Existing documentation that a person is deaf-blind, such as an individualized education program (IEP) or a statement from a public or private agency, such as a Social Security determination letter, may serve as verification of disability.

(iv) The verification of disability must include the attesting professional's name, title, and contact information, including address, phone number, and e-mail address.

(2) *Verification of low income status.* An individual claiming eligibility under the NDBEDP must provide verification that he or she has an income that does not exceed 400 percent of the Federal Poverty Guidelines as defined at 42 U.S.C. 9902(2) or that he or she is enrolled in a federal program with a lesser income eligibility requirement, such as the Federal Public Housing Assistance or Section 8; Supplemental Nutrition Assistance Program, formerly known as Food Stamps; Low Income Home Energy Assistance Program; Medicaid; National School Lunch Program's free lunch program; Supplemental Security Income; or Temporary Assistance for Needy Families. The NDBEDP Administrator may identify state or other federal programs with income eligibility thresholds that do not exceed 400 percent of the Federal Poverty Guidelines for determining income eligibility for participation in the NDBEDP. Where an applicant is not already enrolled in a qualifying low-income program, low-income eligibility may be verified by the certified program using appropriate and reasonable means.

(3) *Prohibition against requiring employment.* No program certified under the NDBEDP may impose a requirement for eligibility in this program that an applicant be employed or actively seeking employment.

(4) *Access to communications services.* A program certified under the NDBEDP may impose, as a program eligibility criterion, a requirement that telecommunications, Internet access, or advanced communications services are available for use by the applicant.

(e) *Equipment distribution and related services.* (1) Each program certified under the NDBEDP must:

(i) Distribute specialized CPE and provide related services needed to make telecommunications service, Internet access service, and advanced communications, including interexchange services or advanced telecommunications and information services, accessible to individuals who are deaf-blind;

(ii) Obtain verification that NDBEDP applicants meet the definition of an individual who is deaf-blind contained in 47 CFR 64.610(c)(1) and the income eligibility requirements contained in 47 CFR 64.610(d)(2);

(iii) When a recipient relocates to another state, permit transfer of the recipient's account and any control of the distributed equipment to the new state's certified program; (iv) Permit transfer of equipment from a prior state, by that state's NDBEDP certified program;

[Reserved]

(v) Prohibit recipients from transferring equipment received under the NDBEDP to another person through sale or otherwise;

(vi) Conduct outreach, in accessible formats, to inform their state residents about the NDBEDP, which may include the development and maintenance of a program Web site;

(vii) Engage an independent auditor to perform annual audits designed to detect and prevent fraud, waste, and abuse, and submit, as necessary, to audits arranged by the Commission, the Consumer and Governmental Affairs Bureau, the NDBEDP Administrator, or the TRS Fund Administrator for such purpose;

(viii) Retain all records associated with the distribution of equipment and provision of related services under the NDBEDP for two years following the termination of the pilot program; and

(ix) Comply with the reporting requirements contained in 47 CFR 64.610(g).

(2) Each program certified under the NDBEDP may not:

(i) Impose restrictions on specific brands, models or types of communications technology that recipients may receive to access the communications services covered in this section;

(ii) Disable or otherwise intentionally make it difficult for recipients to use certain capabilities, functions, or features on distributed equipment that are needed to access the communications services covered in this section, or direct manufacturers or vendors of specialized CPE to disable or make it difficult for recipients to use

certain capabilities, functions, or features on distributed equipment that are needed to access the communications services covered in this section; or

(iii) Accept any type of financial arrangement from equipment vendors that could incentivize the purchase of particular equipment.

(f) *Payments to NDBEDP certified programs.* (1) Programs certified under the NDBEDP shall be reimbursed for the cost of equipment that has been distributed to eligible individuals and authorized related services, up to the state's funding allotment under this program as determined by the Commission or any entity authorized to act for the Commission on delegated authority.

(2) Within 30 days after the end of each six-month period of the Fund Year, each program certified under the NDBEDP pilot must submit documentation that supports its claim for reimbursement of the reasonable costs of the following:

(i) Equipment and related expenses, including maintenance, repairs, warranties, returns, refurbishing, upgrading, and replacing equipment distributed to consumers;

(ii) Individual needs assessments;

(iii) Installation of equipment and individualized consumer training;

(iv) Maintenance of an inventory of equipment that can be loaned to the consumer during periods of equipment repair;

(v) Outreach efforts to inform state residents about the NDBEDP; and

(vi) Administration of the program, but not to exceed 15 percent of the total reimbursable costs for the distribution of equipment and related services permitted under the NDBEDP.

(3) With each request for payment, the chief executive officer, chief financial officer, or other senior executive of the certified program, such as a manager or director, with first-hand knowledge of the accuracy and completeness of the claim in the request, must certify as follows:

I swear under penalty of perjury that I am (name and title), an officer of the above-named reporting entity and that I have examined all cost data associated with equipment and related services for the claims submitted herein, and that all such data are true and an accurate statement of the affairs of the above-named certified program.

(g) *Reporting requirements.* (1) Each program certified under the NDBEDP must submit the following data electronically to the Commission, as instructed by the NDBEDP Administrator, every six months, commencing with the start of the pilot program:

(i) For each piece of equipment distributed, the identity of and contact information, including street and e-mail addresses, and phone number, for the individual receiving that equipment;

(ii) For each piece of equipment distributed, the identity of and contact information, including street and e-mail addresses, and phone number, for the individual attesting to the disability of the individual who is deaf-blind;

(iii) For each piece of equipment distributed, its name, serial number, brand, function, and cost, the type of communications service with which it is used, and the type of relay service it can access;

(iv) For each piece of equipment distributed, the amount of time, following any assessment conducted, that the requesting individual waited to receive that equipment;

(v) The cost, time and any other resources allocated to assessing an individual's equipment needs;

(vi) The cost, time and any other resources allocated to installing equipment and training deaf-blind individuals on using equipment;

(vii) The cost, time and any other resources allocated to maintain, repair, cover under warranty, and refurbish equipment;

(viii) The cost, time and any other resources allocated to outreach activities related to the NDBEDP, and the type of outreach efforts undertaken;

(ix) The cost, time and any other resources allocated to upgrading the distributed equipment, along with the nature of such upgrades;

(x) To the extent that the program has denied equipment requests made by their deaf-blind residents, a summary of the number and types of equipment requests denied and reasons for such denials;

(xi) To the extent that the program has received complaints related to the program, a summary of the number and types of such complaints and their resolution; and

(xii) The number of qualified applicants on waiting lists to receive equipment.

(2) With each report, the chief executive officer, chief financial officer, or other senior executive of the certified program, such as a director or manager, with first-hand knowledge of the accuracy and completeness of the information provided in the report, must certify as follows:

I swear under penalty of perjury that I am (name and title), an officer of the above-named reporting entity and that I have examined the foregoing reports and that all requested information has been provided and all statements of fact are true and an accurate statement of the affairs of the above-named certified program.

(h) *Administration of the program.* The Consumer and Governmental Affairs Bureau shall designate a Commission official as the NDBEDP Administrator.

(1) The NDBEDP Administrator will work in collaboration with the TRS Fund Administrator, and be responsible for:

(i) Reviewing program applications received from state EDPs and alternate entities and certifying those that qualify to participate in the program;

(ii) Allocating NDBEDP funding as appropriate and in consultation with the TRS Fund Administrator;

(iii) Reviewing certified program submissions for reimbursement of costs under the NDBEDP, in consultation with the TRS Fund Administrator;

(iv) Working with Commission staff to establish and maintain an NDBEDP Web site, accessible to individuals with disabilities, that includes contact information for certified programs by state and links to their respective Web sites, if any, and overseeing other outreach efforts that may be undertaken by the Commission;

(v) Obtaining, reviewing, and evaluating reported data for the purpose of assessing the pilot program and determining best practices;

(vi) Conferring with stakeholders, jointly or separately, during the course of the pilot program to obtain input and feedback on, among other things, the effectiveness of the pilot program, new technologies, equipment and services that are needed, and suggestions for the permanent program;

(vii) Working with Commission staff to adopt permanent rules for the NDBEDP; and

(viii) Serving as the Commission point of contact for the NDBEDP, including responding to inquiries from certified programs and consumer complaints filed directly with the Commission.

(2) The TRS Fund Administrator, as directed by the NDBEDP Administrator, shall have responsibility for:

(i) Reviewing cost submissions and releasing funds for equipment that has been distributed and authorized related services, including outreach efforts;

(ii) Releasing funds for other authorized purposes, as requested by the Commission or the Consumer and Governmental Affairs Bureau; and

(iii) Collecting data as needed for delivery to the Commission and the NDBEDP Administrator.

(i) *Whistleblower protections.* (1) NDBEDP certified programs shall permit, without reprisal in the form of an adverse personnel action, purchase or contract cancellation or discontinuance, eligibility disqualification, or otherwise, any current or former employee, agent, contractor, manufacturer, vendor, applicant, or recipient, to disclose to a designated official of the certified program, the NDBEDP Administrator, the TRS Fund Administrator, the Commission's Office of Inspector General, or to any federal or state law enforcement entity, any known or suspected violations of the Act or Commission rules, or any other activity that the reporting person reasonably believes to be unlawful, wasteful, fraudulent, or abusive, or that otherwise could result in the improper distribution of equipment, provision of services, or billing to the TRS Fund.

(2) NDBEDP certified programs shall include these whistleblower protections with the information they provide about the program in any employee handbooks or manuals, on their Web sites, and in other appropriate publications.

(j) *Suspension or revocation of certification.* (1) The Commission may suspend or revoke NDBEDP certification if, after notice and opportunity for hearing, the Commission determines that such certification is no longer warranted.

(2) In the event of suspension or revocation, the Commission shall take such steps as may be necessary, consistent with this subpart, to ensure continuity of the NDBEDP for the state whose program has been suspended or revoked.

(3) The Commission may, at its discretion and on its own motion, require a certified program to submit documentation demonstrating ongoing compliance with the Commission's rules if, for example, the Commission receives evidence that a state program may not be in compliance with those rules.

(k) *Expiration of rules.* These rules will expire at the termination of the NDBEDP pilot program.

[76 FR 26647, May 9, 2011; 76 FR 31261, May 31, 2011]

§ 64.611 Internet-based TRS registration.

(a) *Default provider registration.* Every provider of VRS or IP Relay must, no later than December 31, 2008, provide users with the capability to register with that VRS or IP Relay provider as a ''default provider.'' Upon a user's registration, the VRS or IP Relay provider shall:

(1) Either:

(i) Facilitate the user's valid number portability request as set forth in 47 CFR 52.34; or, if the user does not wish to port a number,

(ii) Assign that user a geographically appropriate North American Numbering Plan telephone number; and

(2) Route and deliver all of that user's inbound and outbound calls unless the user chooses to place a call with, or receives a call from, an alternate provider.

(3) *Certification of eligibility of VRS users.* (i) A VRS provider seeking compensation from the TRS Fund for providing VRS to a particular user registered with that provider must first obtain a written certification from the user, attesting that the user is eligible to use VRS.

(ii) The certification required by paragraph (a)(3)(i) of this section must include the user's attestation that:

(A) The user has a hearing or speech disability; and

(B) The user understands that the cost of VRS calls is paid for by contributions from other telecommunications users to the TRS Fund.

(iii) The certification required by paragraph (a)(3)(i) of this section must be made on a form separate from any other agreement or form, and must include a separate user signature specific to the certification. For the purposes of this rule, an electronic signature, defined by the Electronic Signatures in Global and National Commerce Act, as an electronic sound, symbol, or process, attached to or logically associated with a contract or other record and executed or adopted by a person with the intent to sign the record, has the same legal effect as a written signature. For the purposes of this rule, an electronic record, defined by the Electronic Signatures in Global and National Commerce Act as a contract or other record created, generated, sent, communicated, received, or stored by electronic means, constitutes a record.

(iv) Each VRS provider shall maintain the confidentiality of any registration and certification information obtained by the provider, and may not disclose such registration and certification information or the content of such registration and certification information except as required by law or regulation.

(v) VRS providers must, for existing registered Internet-based TRS users, submit the certification required by paragraph (a)(3)(i) of this section to the TRS User Registration Database within 60 days of notice from the Managing Director that the TRS User Registration Database is ready to accept such information.

(vi) When registering a user that is transferring service from another VRS provider, VRS providers shall obtain and submit a properly executed certification if a query of the TRS User Registration Database shows a properly executed certification has not been filed.

(vii) VRS providers shall require their CAs to terminate any call which does not involve an individual eligible to use VRS due to a hearing or speech disability or, pursuant to the provider's policies, the call does not appear to be a legitimate VRS call, and VRS providers may not seek compensation for such calls from the TRS Fund.

(4) TRS User Registration Database information. Each VRS provider shall collect and transmit to the TRS User Registration Database, in a format prescribed by the administrator of the TRS User Registration Database, the following information for each of its new and existing registered Internet-based TRS users: full name; full residential address; ten-digit telephone number assigned in the TRS numbering directory; last four digits of the social security number or Tribal Identification number, if the registered Internet-based TRS user is a member of a Tribal nation and does not have a social security number; date of birth; Registered Location; VRS provider name and dates of service initiation and termination; a digital copy of the user's self-certification of eligibility for VRS and the date obtained by the provider; the date on which the user's identification was verified; and (for existing users only) the date on which the registered Internet-based TRS user last placed a point-to-point or relay call.

(i) Each VRS provider must obtain, from each new and existing registered Internet-based TRS user, consent to transmit the registered Internet-based TRS user's information to the TRS User Registration Database. Prior to obtaining consent, the VRS provider must describe to the registered Internet-based TRS user, using clear, easily understood language, the specific information being transmitted, that the information is being transmitted to the TRS User Registration Database to ensure proper administration of the TRS program, and that failure to provide consent will result in the registered Internet-based TRS user being denied service. VRS providers must obtain and keep a record of affirmative acknowledgment by every registered Internet-based TRS user of such consent.

(ii) VRS providers must, for existing registered Internet-based TRS users, submit the information in paragraph (a)(3) of this section to the TRS User Registration Database within 60 days of notice from the Commission that the TRS User Registration Database is ready to accept such information. Calls from or to existing registered Internet-based TRS users that have not had their information populated in the TRS User Registration Database within 60 days of notice from the Commission that the TRS User Registration Database is ready to accept such information shall not be compensable.

(iii) VRS providers must submit the information in paragraph (a)(4) of this section upon initiation of service for users registered after 60 days of notice from the Commission that the TRS User Registration Database is ready to accept such information.

(b) *Mandatory registration of new users.* As of December 31, 2008, VRS and IP Relay providers must, prior to the initiation of service for an individual that has not previously utilized VRS or IP Relay, register that new user as described in paragraph (a) of this section.

(c) *Obligations of default providers and former default providers.* (1) Default providers must:

(i) Obtain current routing information, including IP addresses or domain names and user names, from their Registered Internet-based TRS Users;

(ii) Provision such information to the TRS Numbering Directory; and

(iii) Maintain such information in their internal databases and in the TRS Numbering Directory.

(2) Internet-based TRS providers (and, to the extent necessary, their Numbering Partners) must:

(i) Take such steps as are necessary to cease acquiring routing information from any VRS or IP Relay user that ports his or her number to another VRS or IP Relay provider or otherwise selects a new default provider;

(ii) Communicate among themselves as necessary to ensure that:

(A) Only the default provider provisions routing information to the central database; and

(B) VRS and IP Relay providers other than the default provider are aware

that they must query the TRS Numbering Directory in order to obtain accurate routing information for a particular user of VRS or IP Relay.

(d) *Proxy numbers*. After December 31, 2008, a VRS or IP Relay provider:

(1) May not assign or issue a proxy or alias for a NANP telephone number to any user; and

(2) Must cease to use any proxy or alias for a NANP telephone number assigned or issued to any Registered Internet-based TRS User.

(e) *Toll free numbers*. A VRS or IP Relay provider:

(1) May not assign or issue a toll free number to any VRS or IP Relay user.

(2) That has already assigned or provided a toll free number to a VRS or IP Relay user must, at the VRS or IP Relay user's request, facilitate the transfer of the toll free number to a toll free subscription with a toll free service provider that is under the direct control of the user.

(3) Must within one year after the effective date of this Order remove from the Internet-based TRS Numbering Directory any toll free number that has not been transferred to a subscription with a toll free service provider and for which the user is the subscriber of record.

(f) *iTRS access technology*. (1) Every VRS or IP Relay provider must ensure that all iTRS access technology they have issued, leased, or otherwise provided to VRS or IP Relay users delivers routing information or other information only to the user's default provider, except as is necessary to complete or receive ''dial around'' calls on a case-by-case basis.

(2) All iTRS access technology issued, leased, or otherwise provided to VRS or IP Relay users by Internet-based TRS providers must be capable of facilitating the requirements of this section.

(g) *User notification*. Every VRS or IP Relay provider must include an advisory on its website and in any promotional materials addressing numbering or E911 services for VRS or IP Relay.

(1) At a minimum, the advisory must address the following issues:

(i) The process by which VRS or IP Relay users may obtain ten-digit telephone numbers, including a brief summary of the numbering assignment and administration processes adopted herein;

(ii) The portability of ten-digit telephone numbers assigned to VRS or IP Relay users;

(iii) The process by which persons using VRS or IP Relay may submit, update, and confirm receipt by the provider of their Registered Location information;

(iv) An explanation emphasizing the importance of maintaining accurate, up-to-date Registered Location information with the user's default provider in the event that the individual places an emergency call via an Internet-based relay service;

(v) The process by which a VRS or IP Relay user may acquire a toll free number, or transfer control of a toll free number from a VRS or IP Relay provider to the user; and

(vi) The process by which persons holding a toll free number request that the toll free number be linked to their ten-digit telephone number in the TRS Numbering Directory.

(2) VRS and IP Relay providers must obtain and keep a record of affirmative acknowledgment by every Registered Internet-based TRS User of having received and understood the advisory described in this subsection.

(h) A VRS CA service provider shall fulfill its obligations under paragraphs (a), (c), (d), and (e) of this section using the Neutral Video Communication Service Platform.

[73 FR 41295, July 18, 2008, as amended at 76 FR 59557, Sept. 27, 2011; 78 FR 40608, July 5, 2013]

EFFECTIVE DATE NOTE: At 78 FR 40608, July 5, 2013, § 64.611 was amended by adding paragraphs (a)(3) and (a)(4). These paragraphs contains information collection and recordkeeping requirements and will not become effective until approval has been given by the Office of Management and Budget.

§ 64.613 Numbering directory for Internet-based TRS users.

(a) *TRS Numbering Directory*. (1) The TRS Numbering Directory shall contain records mapping the geographically appropriate NANP telephone number of each Registered Internet-

based TRS User to a unique Uniform Resource Identifier (URI).

(2) For each record associated with a VRS user's geographically appropriate NANP telephone number, the URI shall contain the IP address of the user's device. For each record associated with an IP Relay user's geographically appropriate NANP telephone number, the URI shall contain the user's user name and domain name that can be subsequently resolved to reach the user.

(3) Within one year after the effective date of this Order, Internet-based TRS providers must ensure that a user's toll free number that is associated with a geographically appropriate NANP number will be associated with the same URI as that geographically appropriate NANP telephone number.

(4) Only the TRS Numbering Administrator and Internet-based TRS providers may access the TRS Numbering Directory.

(b) *Administration*—(1) *Neutrality*. (i) The TRS Numbering Administrator shall be a non-governmental entity that is impartial and not an affiliate of any Internet-based TRS provider.

(ii) Neither the TRS Numbering Administrator nor any affiliate may issue a majority of its debt to, nor derive a majority of its revenues from, any Internet-based TRS provider.

(iii) Nor may the TRS Numbering Administrator nor any affiliate be unduly influenced, as determined by the North American Numbering Council, by parties with a vested interest in the outcome of TRS-related numbering administration and activities.

(iv) Any subcontractor that performs any function of the TRS Numbering Administrator must also meet these neutrality criteria.

(2) *Terms of Administration*. The TRS Numbering Administrator shall administer the TRS Numbering Directory pursuant to the terms of its contract.

(3) *Compensation*. The TRS Fund, as defined by 47 CFR 64.604(a)(5)(iii), may compensate the TRS Numbering Administrator for the reasonable costs of administration pursuant to the terms of its contract.

[73 FR 41296, July 18, 2008, as amended at 76 FR 59577, Sept. 27, 2011]

§ 64.615 TRS User Registration Database and administrator.

(a) *TRS User Registration Database*. (1) VRS providers shall validate the eligibility of the party on the video side of each call by querying the TRS User Registration Database on a per-call basis. Emergency 911 calls are excepted from this requirement.

(i) Validation shall occur during the call setup process, prior to the placement of the call.

(ii) If the eligibility of at least one party to the call is not validated using the TRS User Registration Database, the call shall not be completed, and the VRS provider shall either terminate the call or, if appropriate, offer to register the user if they are able to demonstrate eligibility.

(iii) Calls that VRS providers are prohibited from completing because the user's eligibility cannot be validated shall not be included in speed of answer calculations and shall not be eligible for compensation from the TRS Fund.

(2) The administrator of the TRS User Registration Database shall assign a unique identifier to each user in the TRS User Registration Database.

(3) *Data integrity*. (i) Each VRS provider shall request that the administrator of the TRS User Registration Database remove from the TRS User Registration Database user information for any registered user:

(A) Who informs its default provider that it no longer wants use of a ten-digit number for TRS services; or;

(B) For whom the provider obtains information that the user is not eligible to use the service.

(ii) The administrator of the TRS User Registration Database shall remove the data of:

(A) Any user that has neither placed nor received a VRS or point to point call in a one year period; and

(B) Any user for which a VRS provider makes a request under paragraph (a)(3)(i) of this section.

(4) VRS providers may query the TRS User Registration Database only for the purposes provided in this subpart, and to determine whether information with respect to its registered users already in the database is correct and complete.

(5) *User verification*. (i) The TRS User Registration Database shall have the capability of performing an identification verification check when a VRS provider or other party submits a query to the database about an existing or potential user.

(ii) VRS providers shall not register individuals that do not pass the identification verification check conducted through the TRS User Registration Database.

(iii) VRS providers shall not seek compensation for calls placed by individuals that do not pass the identification verification check conducted through the TRS User Registration Database.

(b) *Administration*—(1) *Terms of administration*. The administrator of the TRS User Registration Database shall administer the TRS User Registration Database pursuant to the terms of its contract.

(2) *Compensation*. The TRS Fund, as defined by § 64.604(a)(5)(iii) of this subpart, may be used to compensate the administrator of the TRS User Registration Database for the reasonable costs of administration pursuant to the terms of its contract.

[78 FR 40609, July 5, 2013]

EFFECTIVE DATE NOTE: At 78 FR 40609, July 5, 2013, § 64.615 was added. Paragraph (a) contains information collection and recordkeeping requirements and will not become effective until approval has been given by the Office of Management and Budget.

§ 64.617 Neutral Video Communication Service Platform.

(a) VRS CA service providers certified by the Commission are required to utilize the Neutral Video Communication Service Platform to process VRS calls. Each VRS CA service provider shall be responsible for providing sign language interpretation services and for ensuring that the Neutral Video Communication Service Platform has the information it needs to provide video communication service on the VRS CA service provider's behalf.

(b) *Administration*—(1) *Terms of administration*. The provider of the Neutral Video Communication Service Platform shall administer the Neutral Video Communication Service Platform pursuant to the terms of its contract.

(2) *Compensation*. The TRS Fund, as defined by § 64.604(a)(5)(iii) of this subpart, may be used to compensate the provider of the Neutral Video Communication Service Platform for the reasonable costs of administration pursuant to the terms of its contract.

[78 FR 40609, July 5, 2013]

§ 64.619 VRS Access Technology Reference Platform and administrator.

(a) *VRS Access Technology Reference Platform*. (1) The VRS Access Technology Reference Platform shall be a software product that performs consistently with the rules in this subpart, including any standards adopted in § 64.621 of this subpart.

(2) The VRS Access Technology Reference Platform shall be available for use by the public and by developers.

(b) *Administration*—(1) Terms of administration. The administrator of the VRS Access Technology Reference Platform shall administer the VRS Access Technology Reference Platform pursuant to the terms of its contract.

(2) *Compensation*. The TRS Fund, as defined by § 64.604(a)(5)(iii) of this subpart, may be used to compensate the administrator of the VRS Access Technology Reference Platform for the reasonable costs of administration pursuant to the terms of its contract.

[78 FR 40609, July 5, 2013]

§ 64.621 Interoperability and portability.

(a) *General obligations of VRS providers*. (1) All VRS users must be able to place a VRS call through any of the VRS providers' services, and all VRS providers must be able to receive calls from, and make calls to, any VRS user.

(2) A VRS provider may not take steps that restrict a user's unfettered access to another provider's service, such as providing degraded service quality to VRS users using VRS equipment or service with another provider's service.

(3) All VRS providers must ensure that their VRS access technologies and their video communication service platforms are interoperable with the VRS Access Technology Reference

Platform, including for point-to-point calls. No VRS provider shall be compensated for minutes of use involving their VRS access technologies or video communication service platforms that are not interoperable with the VRS Access Technology Reference Platform.

(4) All VRS providers must ensure that their VRS access technologies and their video communication service platforms are interoperable with the Neutral Video Communication Service Platform, including for point-to-point calls. No VRS provider shall be compensated for minutes of use involving their VRS access technologies or video communication service platforms that are not interoperable with the Neutral Video Communication Service Platform.

(b) [Reserved]

[78 FR 40609, July 5, 2013]

§ 64.623 Administrator requirements.

(a) For the purposes of this section, the term ''Administrator'' shall refer to each of the TRS Numbering administrator, the administrator of the TRS User Registration Database, the administrator of the VRS Access Technology Reference Platform, and the provider of the Neutral Video Communication Service Platform. A single entity may serve in one or more of these capacities.

(b) *Neutrality*. (1) The Administrator shall be a non-governmental entity that is impartial and not an affiliate of any Internet-based TRS provider.

(2) Neither the Administrator nor any affiliate thereof shall issue a majority of its debt to, nor derive a majority of its revenues from, any Internet-based TRS provider.

(3) Neither the TRS Numbering administrator nor any affiliate thereof shall be unduly influenced, as determined by the North American Numbering Council, by parties with a vested interest in the outcome of TRS-related numbering administration and activities.

(4) None of the administrator of the TRS User Registration Database, the administrator of the VRS Access Technology Reference Platform, or the provider of the Neutral Video Communication Service Platform, nor any affiliates thereof, shall be unduly influenced, as determined by the Commission, by parties with a vested interest in the outcome of TRS-related activities.

(5) Any subcontractor that performs any function of any Administrator shall also meet the neutrality criteria applicable to such Administrator.

(c) *Terms of administration*. The Administrator shall administer pursuant to the terms of its contract.

(d) *Compensation*. The TRS Fund, as defined by § 64.604(a)(5)(iii) of this subpart, may be used to compensate the Administrator for the reasonable costs of administration pursuant to the terms of its contract.

[78 FR 40609, July 5, 2013]

§ 64.630 Applicability of change of default TRS provider rules.

Sections 64.630 through 64.636 of this part governing changes in default TRS providers shall apply to any provider of IP Relay or VRS eligible to receive payments from the TRS Fund.

[78 FR 40609, July 5, 2013]

§ 64.631 Verification of orders for change of default TRS providers.

(a) No iTRS provider, either directly or through its numbering partner, shall initiate or implement the process to change an iTRS user's selection of a default provider prior to obtaining:

(1) Authorization from the iTRS user, and

(2) Verification of that authorization in accordance with the procedures prescribed in this section. The new default provider shall maintain and preserve without alteration or modification all records of verification of the iTRS user's authorization for a minimum period of five years after obtaining such verification and shall make such records available to the Commission upon request. In any case where the iTRS provider is unable, unwilling or otherwise fails to make such records available to the Commission upon request, it shall be presumed that the iTRS provider has failed to comply with its verification obligations under the rules.

(b) Where an iTRS provider is offering more than one type of TRS, that

provider must obtain separate authorization from the iTRS user for each service, although the authorizations may be obtained within the same transaction. Each authorization must be verified separately from any other authorizations obtained in the same transaction. Each authorization must be verified in accordance with the verification procedures prescribed in this part.

(c) A new iTRS provider shall not, either directly or through its numbering partner, initiate or implement the process to change a default provider unless and until the order has been verified in accordance with one of the following procedures:

(1) The iTRS provider has obtained the iTRS user's written or electronically signed authorization in a form that meets the requirements of § 64.632 of this part; or

(2) An independent third party meeting the qualifications in this subsection has obtained, in accordance with the procedures set forth in paragraphs (c)(2)(i) through (iv) of this section, the iTRS user's authorization to implement the default provider change order that confirms and includes appropriate verification of registration data with the TRS User Registration Database as defined in § 64.601(a) of this part. The independent third party must not be owned, managed, controlled, or directed by the iTRS provider or the iTRS provider's marketing agent; must not have any financial incentive to confirm default provider change orders for the iTRS provider or the iTRS provider's marketing agent; and must operate in a location physically separate from the iTRS provider or the iTRS provider's marketing agent.

(i) Methods of third party verification. Third party verification systems and three-way conference calls may be used for verification purposes so long as the requirements of paragraphs (c)(3)(ii) through (iv) of this section are satisfied. It shall be a per se violation of these rules if at any time the iTRS provider, an iTRS provider's marketing representative, or any other person misleads the iTRS user with respect to the authorization that the iTRS user is giving, the purpose of that authorization, the purpose of the verification, the verification process, or the identity of the person who is placing the call as well as on whose behalf the call is being placed, if applicable.

(ii) Provider initiation of third party verification. An iTRS provider or an iTRS provider's marketing representative initiating a three-way conference call must drop off the call once the three-way connection has been established.

(iii) Requirements for content and format of third party verification. Any description of the default provider change transaction by a third party verifier must not be misleading. At the start of the third party verification process, the third party verifier shall identify the new default provider to the iTRS user and shall confirm that the iTRS user understands that the iTRS user is changing default providers and will no longer receive service from the iTRS user's current iTRS provider. In addition, all third party verification methods shall elicit, at a minimum: The date of the verification; the identity of the iTRS user; confirmation that the person on the call is the iTRS user; confirmation that the iTRS user wants to make the default provider change; confirmation that the iTRS user understands that a default provider change, not an upgrade to existing service, or any other misleading description of the transaction, is being authorized; confirmation that the iTRS user understands what the change in default provider means, including that the iTRS user may need to return any video equipment belonging to the original default provider; the name of the new default provider affected by the change; the telephone number of record to be transferred to the new default provider; and the type of TRS used with the telephone number being transferred. If the iTRS user has additional questions for the iTRS provider's marketing representative during the verification process, the verifier shall instruct the iTRS user that they are terminating the verification process, that the iTRS user may contact the marketing representative with additional questions, and that the iTRS user's default provider will not be changed. The marketing representative

may again initiate the verification process following the procedures set out in this section after the iTRS user contacts the marketing representative with any additional questions. Third party verifiers may not market the iTRS provider's services by providing additional information.

(iv) Other requirements for third party verification. All third party verifications shall be conducted in the same language and format that were used in the underlying marketing transaction and shall be recorded in their entirety. In the case of VRS, this means that if the marketing process was conducted in American Sign Language (ASL), then the third party verification shall be conducted in ASL. In the event that the underlying marketing transaction was conducted via text over IP Relay, such text format shall be used for the third party verification. The third party verifier shall inform both the iTRS user and, where applicable, the communications assistant relaying the call, that the call is being recorded. The third party verifier shall provide the new default provider an audio, video, or IP Relay transcript of the verification of the iTRS user authorization. New default providers shall maintain and preserve audio and video records of verification of iTRS user authorization in accordance with the procedures set forth in paragraph (a)(2) of this section.

(d) A new default provider shall implement an iTRS user's default provider change order within 60 days of obtaining either:

(1) A written or electronically signed letter of agency in accordance with § 64.632 of this part or

(2) Third party verification of the iTRS user's default provider change order in accordance with paragraph (c)(2) of this section. If not implemented within 60 days as required herein, such default provider change order shall be deemed void.

(e) At any time during the process of changing an iTRS user's default provider, and until such process is completed, which is when the new default provider assumes the role of default provider, the original default provider shall not:

(1) Reduce the level or quality of iTRS service provided to such iTRS user, or

(2) Reduce the functionality of any VRS access technology provided by the iTRS provider to such iTRS user.

(f) An iTRS provider that is certified pursuant to § 64.606(a)(2) of this part may acquire, through a sale or transfer, either part or all of another iTRS provider's iTRS user base without obtaining each iTRS user's authorization and verification in accordance with paragraph (c) of this section, provided that the acquiring iTRS provider complies with the following streamlined procedures. An iTRS provider shall not use these streamlined procedures for any fraudulent purpose, including any attempt to avoid liability for violations under part 64 of the Commission rules.

(1) Not later than 30 days before the transfer of the affected iTRS users from the selling or transferring iTRS provider to the acquiring iTRS provider, the acquiring iTRS provider shall provide notice to each affected iTRS user of the information specified herein. The acquiring iTRS provider is required to fulfill the obligations set forth in the advance iTRS user notice. In the case of VRS, the notice shall be provided as a pre-recorded video message in American Sign Language sent to all affected iTRS users. In the case of IP Relay, the notice shall be provided as a pre-recorded text message sent to all affected iTRS users. The advance iTRS user notice shall be provided in a manner consistent with 47 U.S.C. 255, 617, 619 and the Commission's rules regarding accessibility to blind and visually-impaired consumers, §§ 6.3, 6.5, 14.20, and 14.21 of this chapter. The following information must be included in the advance iTRS user notice:

(i) The date on which the acquiring iTRS provider will become the iTRS user's new default provider;

(ii) The iTRS user's right to select a different default provider for the iTRS at issue, if an alternative iTRS provider is available;

(iii) Whether the acquiring iTRS provider will be responsible for handling any complaints filed, or otherwise raised, prior to or during the transfer

against the selling or transferring iTRS provider, and

(iv) The toll-free customer service telephone number of the acquiring iTRS provider.

(2) All iTRS users receiving the notice will be transferred to the acquiring iTRS provider, unless they have selected a different default provider before the transfer date.

[78 FR 40609, July 5, 2013]

EFFECTIVE DATE NOTE: At 78 FR 40609, July 5, 2013, § 64.631 was added. Paragraphs (a) through (d) and (f) contain information collection and recordkeeping requirements and will not become effective until approval has been given by the Office of Management and Budget.

§ 64.632 Letter of authorization form and content.

(a) An iTRS provider may use a written or electronically signed letter of authorization to obtain authorization of an iTRS user's request to change his or her default provider. A letter of authorization that does not conform with this section is invalid for purposes of this subpart.

(b) The letter of authorization shall be a separate document or located on a separate screen or Web page. The letter of authorization shall contain the following title ''Letter of Authorization to Change my Default Provider'' at the top of the page, screen, or Web page, as applicable, in clear and legible type.

(c) The letter of authorization shall contain only the authorizing language described in paragraph (d) of this section and be strictly limited to authorizing the new default provider to implement a default provider change order. The letter of authorization shall be signed and dated by the iTRS user requesting the default provider change.

(d) At a minimum, the letter of authorization must be printed with a type of sufficient size and readable type to be clearly legible and must contain clear and unambiguous language that confirms:

(1) The iTRS user's registered name and address and each telephone number to be covered by the default provider change order;

(2) The decision to change the default provider from the original default provider to the new default provider;

(3) That the iTRS user designates [insert the name of the new default provider] to act as the iTRS user's agent and authorizing the new default provider to implement the default provider change; and

(4) That the iTRS user understands that only one iTRS provider may be designated as the TRS user's default provider for any one telephone number.

(e) If any portion of a letter of authorization is translated into another language then all portions of the letter of authorization must be translated into that language. Every letter of authorization must be translated into the same language as any promotional materials, descriptions or instructions provided with the letter of authorization.

(f) Letters of authorization submitted with an electronically signed authorization must include the consumer disclosures required by Section 101(c) of the Electronic Signatures in Global and National Commerce Act.

[78 FR 40609, July 5, 2013]

§ 64.633 Procedures for resolution of unauthorized changes in default provider.

(a) *Notification of alleged unauthorized provider change.* Original default providers who are informed of an unauthorized default provider change by an iTRS user shall immediately notify the allegedly unauthorized provider and the Commission's Consumer and Governmental Affairs Bureau of the incident.

(b) *Referral of complaint.* Any iTRS provider that is informed by an iTRS user or original default provider of an unauthorized default provider change shall:

(1) Notify the Commission's Consumer and Governmental Affairs Bureau, and

(2) Shall inform that iTRS user of the iTRS user's right to file a complaint with the Commission's Consumer and Governmental Affairs Bureau. iTRS providers shall also inform the iTRS user that the iTRS user may contact and file a complaint with the alleged unauthorized default provider. An original default provider shall have the

right to file a complaint with the Commission in the event that one of its respective iTRS users is the subject of an alleged unauthorized default provider change.

(c) *Notification of receipt of complaint.* Upon receipt of an unauthorized default provider change complaint or notification filed pursuant to this section, the Commission will notify the allegedly unauthorized provider and the Fund administrator of the complaint or notification and order that the unauthorized provider identify to the Fund administrator all minutes attributable to the iTRS user after the alleged unauthorized change of default provider is alleged to have occurred. The Fund administrator shall withhold reimbursement for such minutes pending Commission determination of whether an unauthorized change, as defined by § 64.601(a) of this part, has occurred, if it has not already done so.

(d) *Proof of verification.* Not more than 30 days after notification of the complaint or other notification, the alleged unauthorized default provider shall provide to the Commission's Consumer and Governmental Affairs Bureau a copy of any valid proof of verification of the default provider change. This proof of verification must clearly demonstrate a valid authorized default provider change, as that term is defined in §§ 64.631 through 64.632 of this part. The Commission will determine whether an unauthorized change, as defined by § 64.601(a) of this part, has occurred using such proof and any evidence supplied by the iTRS user or other iTRS providers. Failure by the allegedly unauthorized provider to respond or provide proof of verification will be presumed to be sufficient evidence of a violation.

[78 FR 40609, July 5, 2013]

§ 64.634 Procedures where the Fund has not yet reimbursed the provider.

(a) This section shall only apply after an iTRS user or iTRS provider has complained to or notified the Commission that an allegedly unauthorized change, as defined by § 64.601(a) of this part, has occurred, and the TRS Fund (Fund), as defined in § 64.604(c)(5)(iii) of this part, has not reimbursed the allegedly unauthorized default provider for service attributable to the iTRS user after the allegedly unauthorized change occurred.

(b) An allegedly unauthorized provider shall identify to the Fund administrator all minutes submitted by the allegedly unauthorized provider to the Fund for reimbursement that are attributable to the iTRS user after the allegedly unauthorized change of default provider, as defined by § 64.601(a) of this part, is alleged to have occurred.

(c) If the Commission determines that an unauthorized change, as defined by § 64.601(a) of this part, has occurred, the Commission shall direct the Fund administrator to not reimburse for any minutes attributable to the iTRS user after the unauthorized change occurred, and neither the authorized nor the unauthorized default provider may seek reimbursement from the fund for those charges. The remedies provided in this section are in addition to any other remedies available by law.

(d) If the Commission determines that the default provider change was authorized, the default provider may seek reimbursement from the Fund for minutes of service provided to the iTRS user.

[78 FR 40609, July 5, 2013]

EFFECTIVE DATE NOTE: At 78 FR 40609, July 5, 2013, § 64.634 was added. Paragraph (b) contains information collection and recordkeeping requirements and will not become effective until approval has been given by the Office of Management and Budget.

§ 64.635 Procedures where the Fund has already reimbursed the provider.

(a) The procedures in this section shall only apply after an iTRS user or iTRS provider has complained to or notified the Commission that an unauthorized change, as defined by § 64.601(a) of this part, has occurred, and the Fund has reimbursed the allegedly unauthorized default provider for minutes of service provided to the iTRS user.

(b) If the Commission determines that an unauthorized change, as defined by § 64.601(a) of this part, has occurred, it shall direct the unauthorized

default provider to remit to the Fund an amount equal to 100% of all payments the unauthorized default provider received from the Fund for minutes attributable to the iTRS user after the unauthorized change occurred. The remedies provided in this section are in addition to any other remedies available by law.

[78 FR 40609, July 5, 2013]

§ 64.636 Prohibition of default provider freezes.

(a) A default provider freeze prevents a change in an iTRS user's default provider selection unless the iTRS user gives the provider from whom the freeze was requested his or her express consent.

(b) Default provider freezes shall be prohibited.

[78 FR 40609, July 5, 2013]

Subpart G—Furnishing of Enhanced Services and Customer-Premises Equipment by Bell Operating Companies; Telephone Operator Services

§ 64.702 Furnishing of enhanced services and customer-premises equipment.

(a) For the purpose of this subpart, the term *enhanced service* shall refer to services, offered over common carrier transmission facilities used in interstate communications, which employ computer processing applications that act on the format, content, code, protocol or similar aspects of the subscriber's transmitted information; provide the subscriber additional, different, or restructured information; or involve subscriber interaction with stored information. Enhanced services are not regulated under title II of the Act.

(b) Bell Operating Companies common carriers subject, in whole or in part, to the Communications Act may directly provide enhanced services and customer-premises equipment; provided, however, that the Commission may prohibit any such common carrier from engaging directly or indirectly in furnishing enhanced services or customer-premises equipment to others except as provided for in paragraph (c) of this section, or as otherwise authorized by the Commission.

(c) A Bell Operating Company common carrier prohibited by the Commission pursuant to paragraph (b) of this section from engaging in the furnishing of enhanced services or customer-premises equipment may, subject to other provisions of law, have a controlling or lesser interest in, or be under common control with, a separate corporate entity that furnishes enhanced services or customer-premises equipment to others provided the following conditions are met:

(1) Each such separate corporation shall obtain all transmission facilities necessary for the provision of enhanced services pursuant to tariff, and may not own any network or local distribution transmission facilities or equipment.

(2) Each such separate corporation shall operate independently in the furnishing of enhanced services and customer-premises equipment. It shall maintain its own books of account, have separate officers, utilize separate operating, marketing, installation, and maintenance personnel, and utilize separate computer facilities in the provision of enhanced services.

(3) Each such separate corporation which provides customer-premises equipment or enhanced services shall deal with any affiliated manufacturing entity only on an arm's length basis.

(4) Any research or development performed on a joint or separate basis for the subsidiary must be done on a compensatory basis. Except for generic software within equipment, manufactured by an affiliate, that is sold ''off the shelf'' to any interested purchaser, the separate corporation must develop its own software, or contract with non-affiliated vendors.

(5) All transactions between the separate corporation and the carrier or its affiliates which involve the transfer, either direct or by accounting or other record entries, of money, personnel, resources, other assets or anything of value, shall be reduced to writing. A copy of any contract, agreement, or other arrangement entered into between such entities shall be filed with the Commission within 30 days after

the contract, agreement, or other arrangement is made. This provision shall not apply to any transaction governed by the provision of an effective state or federal tariff.

(d) A carrier subject to the proscription set forth in paragraph (c) of this section:

(1) Shall not engage in the sale or promotion of enhanced services or customer-premises equipment, on behalf of the separate corporation, or sell, lease or otherwise make available to the separate corporation any capacity or computer system component on its computer system or systems which are used in any way for the provision of its common carrier communications services. (This does not apply to communications services offered the separate subsidiary pursuant to tariff);

(2) Shall disclose to the public all information relating to network design and technical standards and information affecting changes to the telecommunications network which would affect either intercarrier interconnection or the manner in which customer-premises equipment is attached to the interstate network prior to implementation and with reasonable advance notification. Such information shall be disclosed in compliance with the procedures set forth in 47 CFR 51.325 through 51.335.

(3) [Reserved]

(4) Must obtain Commission approval as to the manner in which the separate corporation is to be capitalized, prior to obtaining any interest in the separate corporation or transferring any assets, and must obtain Commission approval of any modification to a Commission approved capitalization plan.

(e) Except as otherwise ordered by the Commission, the carrier provision of customer premises equipment used in conjunction with the interstate telecommunications network may be offered in combination with the provision of common carrier communications services, except that the customer premises equipment shall not be offered on a tariffed basis.

[45 FR 31364, May 13, 1980, as amended at 46 FR 6008, Jan. 21, 1981; 63 FR 20338, Apr. 24, 1998; 64 FR 14148, Mar. 24, 1999; 66 FR 19402, Apr. 16, 2001]

§ 64.703 Consumer information.

(a) Each provider of operator services shall:

(1) Identify itself, audibly and distinctly, to the consumer at the beginning of each telephone call and before the consumer incurs any charge for the call;

(2) Permit the consumer to terminate the telephone call at no charge before the call is connected;

(3) Disclose immediately to the consumer, upon request and at no charge to the consumer—

(i) A quotation of its rates or charges for the call;

(ii) The methods by which such rates or charges will be collected; and

(iii) The methods by which complaints concerning such rates, charges, or collection practices will be resolved; and

(4) Disclose, audibly and distinctly to the consumer, at no charge and before connecting any interstate non-access code operator service call, how to obtain the total cost of the call, including any aggregator surcharge, or the maximum possible total cost of the call, including any aggregator surcharge, before providing further oral advice to the consumer on how to proceed to make the call. The oral disclosure required in this subsection shall instruct consumers that they may obtain applicable rate and surcharge quotations either, at the option of the provider of operator services, by dialing no more than two digits or by remaining on the line. The phrase ''total cost of the call'' as used in this paragraph means both the variable (duration-based) charges for the call and the total per-call charges, exclusive of taxes, that the carrier, or its billing agent, may collect from the consumer for the call. It does not include additional charges that may be assessed and collected without the involvement of the carrier, such as a hotel surcharge billed by a hotel. Such charges are addressed in paragraph (b) of this section.

(b) Each aggregator shall post on or near the telephone instrument, in plain view of consumers:

(1) The name, address, and toll-free telephone number of the provider of operator services;

(2) Except for CMRS aggregators, a written disclosure that the rates for all operator-assisted calls are available on request, and that consumers have a right to obtain access to the interstate common carrier of their choice and may contact their preferred interstate common carriers for information on accessing that carrier's service using that telephone;

(3) In the case of a pay telephone, the local coin rate for the pay telephone location; and

(4) The name and address of the Consumer Information Bureau of the Commission (Federal Communications Commission, Consumer Information Bureau, Consumer Complaints—Telephone, Washington, D.C. 20554), to which the consumer may direct complaints regarding operator services. An existing posting that displays the address that was required prior to the amendment of this rules (*i.e.*, the address of the Common Carrier Bureau's Enforcement Division, which no longer exists) may remain until such time as the posting is replaced for any other purpose. Any posting made after the effective date of this amendment must display the updated address (*i.e.*, the address of the Consumer Information Bureau).

(c) *Updating of postings*. The posting required by this section shall be updated as soon as practicable following any change of the carrier presubscribed to provide interstate service at an aggregator location, but no later than 30 days following such change. This requirement may be satisfied by applying to a payphone a temporary sticker displaying the required posting information, provided that any such temporary sticker shall be replaced with permanent signage during the next regularly scheduled maintenance visit.

(d) *Effect of state law or regulation*. The requirements of paragraph (b) of this section shall not apply to an aggregator in any case in which State law or State regulation requires the aggregator to take actions that are substantially the same as those required in paragraph (b) of this section.

(e) Each provider of operator services shall ensure, by contract or tariff, that each aggregator for which such provider is the presubscribed provider of operator services is in compliance with the requirements of paragraph (b) of this section.

[56 FR 18523, Apr. 23, 1991, as amended at 61 FR 14981, Apr. 4, 1996; 61 FR 52323, Oct. 7, 1996; 63 FR 11617, Mar. 10, 1998; 63 FR 43041, Aug. 11, 1998; 64 FR 47119, Aug. 30, 1999; 67 FR 2819, Jan. 22, 2002]

§ 64.704 Call blocking prohibited.

(a) Each aggregator shall ensure that each of its telephones presubscribed to a provider of operator services allows the consumer to use ''800'' and ''950'' access code numbers to obtain access to the provider of operator services desired by the consumer.

(b) Each provider of operator services shall:

(1) Ensure, by contract or tariff, that each aggregator for which such provider is the presubscribed provider of operator services is in compliance with the requirements of paragraphs (a) and (c) of this section; and

(2) Withhold payment (on a location-by-location basis) of any compensation, including commissions, to aggregators if such provider reasonably believes that the aggregator is blocking access to interstate common carriers in violation of paragraphs (a) or (c) of this section.

(c) Each aggregator shall, by the earliest applicable date set forth in this paragraph, ensure that any of its equipment presubscribed to a provider of operator services allows the consumer to use equal access codes to obtain access to the consumer's desired provider of operator services.

(1) Each pay telephone shall, within six (6) months of the effective date of this paragraph, allow the consumer to use equal access codes to obtain access to the consumer's desired provider of operator services.

(2) All equipment that is technologically capable of identifying the dialing of an equal access code followed by any sequence of numbers that will result in billing to the originating telephone and that is technologically capable of blocking access through such dialing sequences without blocking access through other dialing sequences involving equal access codes, shall, within six (6) months of the effective

date of this paragraph or upon installation, whichever is sooner, allow the consumer to use equal access codes to obtain access to the consumer's desired provider of operator services.

(3) All equipment or software that is manufactured or imported on or after April 17, 1992, and installed by any aggregator shall, immediately upon installation by the aggregator, allow the consumer to use equal access codes to obtain access to the consumer's desired provider of operator services.

(4) All equipment that can be modified at a cost of no more than $15.00 per line to be technologically capable of identifying the dialing of an equal access code followed by any sequence of numbers that will result in billing to the originating telephone and to be technologically capable of blocking access through such dialing sequences without blocking access through other dialing sequences involving equal access codes, shall, within eighteen (18) months of the effective date of this paragraph, allow the consumer to use equal access codes to obtain access to the consumer's desired provider of operator services.

(5) All equipment not included in paragraphs (c)(1), (c)(2), (c)(3), or (c)(4) of this section shall, no later than April 17, 1997, allow the consumer to use equal access codes to obtain access to the consumer's desired provider of operator services.

(6) This paragraph does not apply to the use by consumers of equal access code dialing sequences that result in billing to the originating telephone.

(d) All providers of operator services, except those employing a store-and-forward device that serves only consumers at the location of the device, shall establish an ''800'' or ''950'' access code number within six (6) months of the effective date of this paragraph.

(e) The requirements of this section shall not apply to CMRS aggregators and providers of CMRS operator services.

[56 FR 18523, Apr. 23, 1991, as amended at 56 FR 40799, Aug. 16, 1991; 57 FR 34260, Aug. 4, 1992; 63 FR 43041, Aug. 11, 1998]

§ 64.705 Restrictions on charges related to the provision of operator services.

(a) A provider of operator services shall:

(1) Not bill for unanswered telephone calls in areas where equal access is available;

(2) Not knowingly bill for unanswered telephone calls where equal access is not available;

(3) Not engage in call splashing, unless the consumer requests to be transferred to another provider of operator services, the consumer is informed prior to incurring any charges that the rates for the call may not reflect the rates from the actual originating location of the call, and the consumer then consents to be transferred;

(4) Except as provided in paragraph (a)(3) of this section, not bill for a call that does not reflect the location of the origination of the call; and

(5) Ensure, by contract or tariff, that each aggregator for which such provider is the presubscribed provider of operator services is in compliance with the requirements of paragraph (b) of this section.

(b) An aggregator shall ensure that no charge by the aggregator to the consumer for using an ''800'' or ''950'' access code number, or any other access code number, is greater than the amount the aggregator charges for calls placed using the presubscribed provider of operator services.

(c) The requirements of paragraphs (a)(5) and (b) of this section shall not apply to CMRS aggregators and providers of CMRS operator services.

[56 FR 18523, Apr. 23, 1991, as amended at 63 FR 43041, Aug. 11, 1998]

§ 64.706 Minimum standards for the routing and handling of emergency telephone calls.

Upon receipt of any emergency telephone call, providers of operator services and aggregators shall ensure immediate connection of the call to the appropriate emergency service of the reported location of the emergency, if known, and, if not known, of the originating location of the call.

[61 FR 14981, Apr. 4, 1996]

§ 64.707 Public dissemination of information by providers of operator services.

Providers of operator services shall regularly publish and make available at no cost to inquiring consumers written materials that describe any recent changes in operator services and in the choices available to consumers in that market.

[56 FR 18524, Apr. 23, 1991]

§ 64.708 Definitions.

As used in §§ 64.703 through 64.707 of this part and § 68.318 of this chapter (47 CFR 64.703–64.707, 68.318):

(a) *Access code* means a sequence of numbers that, when dialed, connect the caller to the provider of operator services associated with that sequence;

(b) *Aggregator* means any person that, in the ordinary course of its operations, makes telephones available to the public or to transient users of its premises, for interstate telephone calls using a provider of operator services;

(c) *Call splashing* means the transfer of a telephone call from one provider of operator services to another such provider in such a manner that the subsequent provider is unable or unwilling to determine the location of the origination of the call and, because of such inability or unwillingness, is prevented from billing the call on the basis of such location;

(d) *CMRS aggregator* means an aggregator that, in the ordinary course of its operations, makes telephones available to the public or to transient users of its premises for interstate telephone calls using a provider of CMRS operator services;

(e) *CMRS operator services* means operator services provided by means of a commercial mobile radio service as defined in section 20.3 of this chapter.

(f) *Consumer* means a person initiating any interstate telephone call using operator services. In collect calling arrangements handled by a provider of operator services, the term consumer also includes the party on the terminating end of the call. For bill-to-third-party calling arrangements handled by a provider of operator services, the term consumer also includes the party to be billed for the call if the latter is contacted by the operator service provider to secure billing approval.

(g) *Equal access* has the meaning given that term in Appendix B of the Modification of Final Judgment entered by the United States District Court on August 24, 1982, in *United States* v. *Western Electric*, Civil Action No. 82–0192 (D.D.C. 1982), as amended by the Court in its orders issued prior to October 17, 1990;

(h) *Equal access code* means an access code that allows the public to obtain an equal access connection to the carrier associated with that code;

(i) *Operator services* means any interstate telecommunications service initiated from an aggregator location that includes, as a component, any automatic or live assistance to a consumer to arrange for billing or completion, or both, of an interstate telephone call through a method other than:

(1) Automatic completion with billing to the telephone from which the call originated; or

(2) Completion through an access code used by the consumer, with billing to an account previously established with the carrier by the consumer;

(j) *Presubscribed provider of operator services* means the interstate provider of operator services to which the consumer is connected when the consumer places a call using a provider of operator services without dialing an access code;

(k) *Provider of CMRS operator services* means a provider of operator services that provides CMRS operator services;

(l) *Provider of operator services* means any common carrier that provides operator services or any other person determined by the Commission to be providing operator services.

[56 FR 18524, Apr. 23, 1991; 56 FR 25721, June 5, 1991, as amended at 61 FR 14981, Apr. 4, 1996; 63 FR 43041, Aug. 11, 1998; 67 FR 2820, Jan. 22, 2002]

§ 64.709 Informational tariffs.

(a) Informational tariffs filed pursuant to 47 U.S.C. 226(h)(1)(A) shall contain specific rates expressed in dollars and cents for each interstate operator service of the carrier and shall also contain applicable per call aggregator surcharges or other per-call fees, if

any, collected from consumers by, or on behalf of, the carrier.

(b) Per call fees, if any, billed on behalf of aggregators or others, shall be specified in informational tariffs in dollars and cents.

(c) In order to remove all doubt as to their proper application, all informational tariffs must contain clear and explicit explanatory statements regarding the rates, *i.e.*, the tariffed price per unit of service, and the regulations governing the offering of service in that tariff.

(d) Informational tariffs shall be accompanied by a cover letter, addressed to the Secretary of the Commission, explaining the purpose of the filing.

(1) The original of the cover letter shall be submitted to the Secretary without attachments, along with FCC Form 159, and the appropriate fee to the address set forth in § 1.1105 of this chapter.

(2) Carriers should file informational tariffs and associated documents, such as cover letters and attachments, electronically in accordance with §§ 61.13 and 61.14 of this chapter.

(e) Any changes to the tariff shall be submitted under a new cover letter with a complete copy of the tariff, including changes.

(1) Changes to a tariff shall be explained in the cover letter but need not be symbolized on the tariff pages.

(2) Revised tariffs shall be filled pursuant to the procedures specified in this section.

[63 FR 11617, Mar. 10, 1998; 63 FR 15316, Mar. 31, 1998, as amended at 67 FR 2820, Jan. 22, 2002; 73 FR 9031, Feb. 19, 2008; 76 FR 43217, July 20, 2011]

§ 64.710 Operator services for prison inmate phones.

(a) Each provider of inmate operator services shall:

(1) Identify itself and disclose, audibly and distinctly to the consumer, at no charge and before connecting any interstate, non-access code operator service call, how to obtain the total cost of the call, including any surcharge or premises-imposed-fee. The oral disclosure required in this paragraph shall instruct consumers that they may obtain applicable rate and surcharge quotations either, at the option of the provider of inmate operator services, by dialing no more than two digits or by remaining on the line. The phrase ''total cost of the call,'' as used in this paragraph, means both the variable (duration-based) charges for the call and the total per-call charges, exclusive of taxes, that the carrier, or its billing agent, may collect from the consumer for the call. Such phrase shall include any per-call surcharge imposed by the correctional institution, unless it is subject to regulation itself as a common carrier for imposing such surcharges, if the contract between the carrier and the correctional institution prohibits both resale and the use of pre-paid calling card arrangements.

(2) Permit the consumer to terminate the telephone call at no charge before the call is connected; and

(3) Disclose immediately to the consumer, upon request and at no charge to the consumer—

(i) The methods by which its rates or charges for the call will be collected; and

(ii) The methods by which complaints concerning such rates, charges or collection practices will be resolved.

(b) As used in this subpart:

(1) *Consumer* means the party to be billed for any interstate call from an inmate telephone;

(2) *Inmate telephone* means a telephone instrument set aside by authorities of a prison or other correctional institution for use by inmates.

(3) *Inmate operator services* means any interstate telecommunications service initiated from an inmate telephone that includes, as a component, any automatic or live assistance to a consumer to arrange for billing or completion, or both, of an interstate telephone call through a method other than:

(i) Automatic completion with billing to the telephone from which the call originated; or

(ii) Completion through an access code used by the consumer, with billing to an account previously established with the carrier by the consumer;

(4) *Provider of inmate operator services* means any common carrier that provides outbound interstate operator services from inmate telephones.

[63 FR 11617, Mar. 10, 1998, as amended at 67 FR 2820, Jan. 22, 2002]

Subpart H—Extension of Unsecured Credit for Interstate and Foreign Communications Services to Candidates for Federal Office

AUTHORITY: Secs. 4, 201, 202, 203, 218, 219, 48 Stat. 1066, 1070, 1077; 47 U.S.C. 154, 201, 202, 203, 218, 219; sec. 401, 86 Stat. 19; 2 U.S.C. 451.

SOURCE: 37 FR 9393, May 10, 1972, unless otherwise noted.

§ 64.801 Purpose.

Pursuant to section 401 of the Federal Election Campaign Act of 1971, Public Law 92–225, these rules prescribe the general terms and conditions for the extension of unsecured credit by a communication common carrier to a candidate or person on behalf of such candidate for Federal office.

§ 64.802 Applicability.

These rules shall apply to each communication common carrier subject to the whole or part of the Communications Act of 1934, as amended.

§ 64.803 Definitions.

For the purposes of this subpart:

(a) *Candidate* means an individual who seeks nomination for election, or election, to Federal office, whether or not such individual is elected, and an individual shall be deemed to seek nomination for election, or election, if he has (1) taken the action necessary under the law of a State to qualify himself for nomination for election, or election, to Federal office, or (2) received contributions or made expenditures, or has given his consent for any other person to receive contributions or make expenditures, with a view to bringing about his nomination for election, or election, to such office.

(b) *Election* means (1) a general, special, primary, or runoff election, (2) a convention or caucus of a political party held to nominate a candidate, (3) a primary election held for the selection of delegates to a national nominating convention of a political party, and (4) a primary election held for the expression of a preference for the nomination of persons for election to the office of President.

(c) *Federal office* means the office of President or Vice President of the United States: or of Senator or Representative in, or Delegate or Resident Commissioner to, the Congress of the United States.

(d) *Person* means an individual, partnership, committee, association, corporation, labor organization, and any other organization or group of persons.

(e) *Unsecured credit* means the furnishing of service without maintaining on a continuing basis advance payment, deposit, or other security, that is designed to assure payment of the estimated amount of service for each future 2 months period, with revised estimates to be made on at least a monthly basis.

§ 64.804 Rules governing the extension of unsecured credit to candidates or persons on behalf of such candidates for Federal office for interstate and foreign common carrier communication services.

(a) There is no obligation upon a carrier to extend unsecured credit for interstate and foreign communication services to a candidate or person on behalf of such candidate for Federal office. However, if the carrier chooses to extend such unsecured credit, it shall comply with the requirements set forth in paragraphs (b) through (g) of this section.

(b) If a carrier decides to extend unsecured credit to any candidate for Federal office or any person on behalf of such candidate, then unsecured credit shall be extended on substantially equal terms and conditions to all candidates and all persons on behalf of all candidates for the same office, with due regard for differences in the estimated quantity of service to be furnished each such candidate or person.

(c) Before extending unsecured credit, a carrier shall obtain a signed written application for service which shall identify the applicant and the candidate and state whether or not the candidate assumes responsibility for

the charges, and which shall also expressly state as follows:

(1) That service is being requested by the applicant or applicants and that the person or persons making the application will be individually, jointly and severally liable for the payment of all charges; and

(2) That the applicant(s) understands that the carrier will (under the provisions of paragraph (d) of this section) discontinue service upon written notice if any amount due is not paid upon demand.

(d) If charges for services rendered are not paid to the carrier within 15 days from rendition of a bill therefor, the carrier shall forthwith at the end of the 15-day period serve written notice on the applicant of intent to discontinue service within 7 days of date of such notice for nonpayment and shall discontinue service at the end of the 7-day period unless all such sums due are paid in full within such 7-day period.

(e) Each carrier shall take appropriate action at law to collect any unpaid balance on an account for interstate and foreign communication services rendered to a candidate or person on behalf of such candidate prior to the expiration of the statute of limitations under section 415(a) of the Communications Act of 1934, as amended.

(f) The records of each account, involving the extension by a carrier of unsecured credit to a candidate or person on behalf of such candidate for common carrier communications services shall be maintained by the carrier so as to show separately, for interstate and foreign communication services all charges, credits, adjustments, and security, if any, and balance receivable.

(g) On or before January 31, 1973, and on corresponding dates of each year thereafter, each carrier which had operating revenues in the preceding year in excess of $1 million shall file with the Commission a report by account of any amount due and unpaid, as of the end of the month prior to the reporting date, for interstate and foreign communications services to a candidate or person on behalf of such candidate when such amount results from the extension of unsecured credit. Each report shall include the following information:

(1) Name of candidate.

(2) Name and address of person or persons applying for service.

(3) Balance due carrier.

(4) Reason for nonpayment.

(5) Payment arrangements, if any.

(6) Date service discontinued.

(7) Date, nature and status of any action taken at law in compliance with paragraph (e) of this section.

[37 FR 9393, May 10, 1972, as amended at 62 FR 5166, Feb. 4, 1997]

Subpart I—Allocation of Costs

§ 64.901 Allocation of costs.

(a) Carriers required to separate their regulated costs from nonregulated costs shall use the attributable cost method of cost allocation for such purpose.

(b) In assigning or allocating costs to regulated and nonregulated activities, carriers shall follow the principles described herein.

(1) Tariffed services provided to a nonregulated activity will be charged to the nonregulated activity at the tariffed rates and credited to the regulated revenue account for that service. Nontariffed services, offered pursuant to a section 252(e) agreement, provided to a nonregulated activity will be charged to the nonregulated activity at the amount set forth in the applicable interconnection agreement approved by a state commission pursuant to section 252(e) and credited to the regulated revenue account for that service.

(2) Costs shall be directly assigned to either regulated or nonregulated activities whenever possible.

(3) Costs which cannot be directly assigned to either regulated or nonregulated activities will be described as common costs. Common costs shall be grouped into homogeneous cost categories designed to facilitate the proper allocation of costs between a carrier's regulated and nonregulated activities. Each cost category shall be allocated between regulated and nonregulated activities in accordance with the following hierarchy:

(i) Whenever possible, common cost categories are to be allocated based

upon direct analysis of the origin of the cost themselves.

(ii) When direct analysis is not possible, common cost categories shall be allocated based upon an indirect, cost-causative linkage to another cost category (or group of cost categories) for which a direct assignment or allocation is available.

(iii) When neither direct nor indirect measures of cost allocation can be found, the cost category shall be allocated based upon a general allocator computed by using the ratio of all expenses directly assigned or attributed to regulated and nonregulated activities.

(4) The allocation of central office equipment and outside plant investment costs between regulated and nonregulated activities shall be based upon the relative regulated and nonregulated usage of the investment during the calendar year when nonregulated usage is greatest in comparison to regulated usage during the three calendar years beginning with the calendar year during which the investment usage forecast is filed.

(c) A telecommunications carrier may not use services that are not competitive to subsidize services subject to competition. Services included in the definition of universal service shall bear no more than a reasonable share of the joint and common costs of facilities used to provide those services.

[52 FR 6560, Mar. 4, 1987, as amended at 52 FR 39534, Oct. 22, 1987; 54 FR 49762, Dec. 1, 1989; 62 FR 45588, Aug. 28, 1997; 67 FR 5702, Feb. 6, 2002]

§ 64.902 Transactions with affiliates.

Except for carriers which employ average schedules in lieu of determining their costs, all carriers subject to § 64.901 are also subject to the provisions of § 32.27 of this chapter concerning transactions with affiliates.

[55 FR 30461, July 26, 1990]

§ 64.903 Cost allocation manuals.

(a) Each incumbent local exchange carrier having annual revenues from regulated telecommunications operations that are equal to or above the indexed revenue threshold (as defined in § 32.9000 of this chapter) except mid-sized incumbent local exchange carriers is required to file a cost allocation manual describing how it separates regulated from nonregulated costs. The manual shall contain the following information regarding the carrier's allocation of costs between regulated and nonregulated activities:

(1) A description of each of the carrier's nonregulated activities;

(2) A list of all the activities to which the carrier now accords incidental accounting treatment and the justification therefor;

(3) A chart showing all of the carrier's corporate affiliates;

(4) A statement identifying each affiliate that engages in or will engage in transactions with the carrier and describing the nature, terms and frequency of each transaction;

(5) A cost apportionment table showing, for each account containing costs incurred in providing regulated services, the cost pools with that account, the procedures used to place costs into each cost pool, and the method used to apportion the costs within each cost pool between regulated and nonregulated activities; and

(6) A description of the time reporting procedures that the carrier uses, including the methods or studies designed to measure and allocate nonproductive time.

(b) Each carrier shall ensure that the information contained in its cost allocation manual is accurate. Carriers must update their cost allocation manuals at least annually, except that changes to the cost apportionment table and to the description of time reporting procedures must be filed at the time of implementation. Annual cost allocation manual updates shall be filed on or before the last working day of each calendar year. Proposed changes in the description of time reporting procedures, the statement concerning affiliate transactions, and the cost apportionment table must be accompanied by a statement quantifying the impact of each change on regulated operations. Changes in the description of time reporting procedures and the statement concerning affiliate transactions must be quantified in $100,000 increments at the account level. Changes in cost apportionment tables

must be quantified in $100,000 increments at the cost pool level. The Chief, Wireline Competition Bureau may suspend any such changes for a period not to exceed 180 days, and may thereafter allow the change to become effective or prescribe a different procedure.

(c) The Commission may by order require any other communications common carrier to file and maintain a cost allocation manual as provided in this section.

[57 FR 4375, Feb. 5, 1992, as amended at 59 FR 46358, Sept. 8, 1994; 61 FR 50246, Sept. 25, 1996; 62 FR 39779, July 24, 1997; 65 FR 16335, Mar. 28, 2000; 67 FR 5702, Feb. 6, 2002; 67 FR 13229, Mar. 21, 2002]

§ 64.904 Independent audits.

(a) Each carrier required to file a cost allocation manual shall elect to either have an attest engagement performed by an independent auditor every two years, covering the prior two year period, or have a financial audit performed by an independent auditor every two years, covering the prior two year period. In either case, the initial engagement shall be performed in the calendar year after the carrier is first required to file a cost allocation manual.

(b) The attest engagement shall be an examination engagement and shall provide a written communication that expresses an opinion that the systems, processes, and procedures applied by the carrier to generate the results reported pursuant to § 43.21(e)(2) of this chapter comply with the Commission's Joint Cost Orders issued in conjunction with CC Docket No. 86–111, the Commission's Accounting Safeguards proceeding in CC Docket No. 96–150, and the Commission's rules and regulations including §§ 32.23 and 32.27 of this chapter, and §§ 64.901, and 64.903 in force as of the date of the auditor's report. At least 30 days prior to beginning the attestation engagement, the independent auditors shall provide the Commission with the audit program. The attest engagement shall be conducted in accordance with the attestation standards established by the American Institute of Certified Public Accountants, except as otherwise directed by the Chief, Enforcement Bureau.

(c) The biennial financial audit shall provide a positive opinion on whether the applicable date shown in the carrier's annual report required by § 43.21(e)(2) of this chapter present fairly, in all material respects, the information of the Commission's Joint Cost Orders issued in conjunction with CC Docket No. 86–111, the Commission's Accounting Safeguards proceeding in CC Docket No. 96–150, and the Commission's rules and regulations including §§ 32.23 and 32.27 of this chapter, and §§ 64.901, and 64.903 in force as of the date of the auditor's report. The audit shall be conducted in accordance with generally accepted auditing standards, except as otherwise directed by the Chief, Enforcement Bureau. The report of the independent auditor shall be filed at the time that the carrier files the annual reports required by § 43.21(e)(2) of this chapter.

[67 FR 5702, Feb. 6, 2002, as amended at 67 FR 13229, Mar. 21, 2002]

§ 64.905 Annual certification.

A mid-sized incumbent local exchange carrier, as defined in § 32.9000 of this chapter, shall file a certification with the Commission stating that it is complying with § 64.901. The certification must be signed, under oath, by an officer of the mid-sized incumbent LEC, and filed with the Commission on an annual basis at the time that the mid-sized incumbent LEC files the annual reports required by § 43.21(e)(2) of this chapter.

[67 FR 5702, Feb. 6, 2002]

Subpart J [Reserved]

Subpart K—Changes in Preferred Telecommunications Service Providers

§ 64.1100 Definitions.

(a) The term *submitting carrier* is generally any telecommunications carrier that requests on the behalf of a subscriber that the subscriber's telecommunications carrier be changed, and seeks to provide retail services to the end user subscriber. A carrier may be treated as a submitting carrier, however, if it is responsible for any unreasonable delays in the submission of

carrier change requests or for the submission of unauthorized carrier change requests, including fraudulent authorizations.

(b) The term *executing carrier* is generally any telecommunications carrier that effects a request that a subscriber's telecommunications carrier be changed. A carrier may be treated as an executing carrier, however, if it is responsible for any unreasonable delays in the execution of carrier changes or for the execution of unauthorized carrier changes, including fraudulent authorizations.

(c) The term *authorized carrier* is generally any telecommunications carrier that submits a change, on behalf of a subscriber, in the subscriber's selection of a provider of telecommunications service with the subscriber's authorization verified in accordance with the procedures specified in this part.

(d) The term *unauthorized carrier* is generally any telecommunications carrier that submits a change, on behalf of a subscriber, in the subscriber's selection of a provider of telecommunications service but fails to obtain the subscriber's authorization verified in accordance with the procedures specified in this part.

(e) The term *unauthorized change* is a change in a subscriber's selection of a provider of telecommunications service that was made without authorization verified in accordance with the verification procedures specified in this part.

(f) The term *state commission* shall include any state entity with the state-designated authority to resolve the complaints of such state's residents arising out of an allegation that an unauthorized change of a telecommunication service provider has occurred that has elected, in accordance with the requirements of § 64.1110(a), to administer the Federal Communications Commission's slamming rules and remedies, as enumerated in §§ 64.1100 through 64.1190.

(g) The term *relevant governmental agency* shall be the state commission if the complainant files a complaint with the state commission or if the complaint is forwarded to the state commission by the Federal Communications Commission, and the Federal Communications Commission if the complainant files a complaint with the Federal Communications Commission, and the complaint is not forwarded to a state commission.

(h) The term *subscriber* is any one of the following:

(1) The party identified in the account records of a common carrier as responsible for payment of the telephone bill;

(2) Any adult person authorized by such party to change telecommunications services or to charge services to the account; or

(3) Any person contractually or otherwise lawfully authorized to represent such party.

[65 FR 47690, Aug. 3, 2000, as amended at 66 FR 12892, Mar. 1, 2001]

§ 64.1110 State notification of election to administer FCC rules.

(a) *Initial Notification*. State notification of an intention to administer the Federal Communications Commission's unauthorized carrier change rules and remedies, as enumerated in §§ 64.1100 through 64.1190, shall be filed with the Commission Secretary in CC Docket No. 94–129 with a copy of such notification provided to the Consumer & Governmental Affairs Bureau Chief. Such notification shall contain, at a minimum, information on where consumers should file complaints, the type of documentation, if any, that must accompany a complaint, and the procedures the state will use to adjudicate complaints.

(b) *Withdrawal of Notification*. State notification of an intention to discontinue administering the Federal Communications Commission's unauthorized carrier change rules and remedies, as enumerated in §§ 64.1100 through 64.1190, shall be filed with the Commission Secretary in CC Docket No. 94–129 with a copy of such amended notification provided to the Consumer & Governmental Affairs Bureau Chief. Such discontinuance shall become effective 60 days after the Commission's receipt of the state's letter.

[65 FR 47691, Aug. 3, 2000, as amended at 73 FR 13149, Mar. 12, 2008]

§ 64.1120 Verification of orders for telecommunications service.

(a) No telecommunications carrier shall submit or execute a change on the behalf of a subscriber in the subscriber's selection of a provider of telecommunications service except in accordance with the procedures prescribed in this subpart. Nothing in this section shall preclude any State commission from enforcing these procedures with respect to intrastate services.

(1) No submitting carrier shall submit a change on the behalf of a subscriber in the subscriber's selection of a provider of telecommunications service prior to obtaining:

(i) Authorization from the subscriber, and

(ii) Verification of that authorization in accordance with the procedures prescribed in this section. The submitting carrier shall maintain and preserve records of verification of subscriber authorization for a minimum period of two years after obtaining such verification.

(2) An executing carrier shall not verify the submission of a change in a subscriber's selection of a provider of telecommunications service received from a submitting carrier. For an executing carrier, compliance with the procedures described in this part shall be defined as prompt execution, without any unreasonable delay, of changes that have been verified by a submitting carrier.

(3) Commercial mobile radio services (CMRS) providers shall be excluded from the verification requirements of this part as long as they are not required to provide equal access to common carriers for the provision of telephone toll services, in accordance with 47 U.S.C. 332(c)(8).

(b) Where a telecommunications carrier is selling more than one type of telecommunications service (*e.g.*, local exchange, intraLATA toll, and interLATA toll), that carrier must obtain separate authorization from the subscriber for each service sold, although the authorizations may be obtained within the same solicitation. Each authorization must be verified separately from any other authorizations obtained in the same solicitation. Each authorization must be verified in accordance with the verification procedures prescribed in this part.

(c) No telecommunications carrier shall submit a preferred carrier change order unless and until the order has been confirmed in accordance with one of the following procedures:

(1) The telecommunications carrier has obtained the subscriber's written or electronically signed authorization in a form that meets the requirements of § 64.1130; or

(2) The telecommunications carrier has obtained the subscriber's electronic authorization to submit the preferred carrier change order. Such authorization must be placed from the telephone number(s) on which the preferred carrier is to be changed and must confirm the information in paragraph (a)(1) of this section. Telecommunications carriers electing to confirm sales electronically shall establish one or more toll-free telephone numbers exclusively for that purpose. Calls to the number(s) will connect a subscriber to a voice response unit, or similar mechanism, that records the required information regarding the preferred carrier change, including automatically recording the originating automatic number identification; or

(3) An appropriately qualified independent third party has obtained, in accordance with the procedures set forth in paragraphs (c)(3)(i) through (c)(3)(iv) of this section, the subscriber's oral authorization to submit the preferred carrier change order that confirms and includes appropriate verification data (*e.g.*, the subscriber's date of birth or social security number). The independent third party must not be owned, managed, controlled, or directed by the carrier or the carrier's marketing agent; must not have any financial incentive to confirm preferred carrier change orders for the carrier or the carrier's marketing agent; and must operate in a location physically separate from the carrier or the carrier's marketing agent.

(i) *Methods of third party verification.* Automated third party verification systems and three-way conference calls may be used for verification purposes

so long as the requirements of paragraphs (c)(3)(ii) through (c)(3)(iv) of this section are satisfied.

(ii) *Carrier initiation of third party verification*. A carrier or a carrier's sales representative initiating a three-way conference call or a call through an automated verification system must drop off the call once the three-way connection has been established.

(iii) *Requirements for content and format of third party verification*. Any description of the carrier change transaction by a third party verifier must not be misleading, and all third party verification methods shall elicit, at a minimum: The date of the verification; the identity of the subscriber; confirmation that the person on the call is authorized to make the carrier change; confirmation that the person on the call wants to make the carrier change; confirmation that the person on the call understands that a carrier change, not an upgrade to existing service, bill consolidation, or any other misleading description of the transaction, is being authorized; the names of the carriers affected by the change (not including the name of the displaced carrier); the telephone numbers to be switched; and the types of service involved (including a brief description of a service about which the subscriber demonstrates confusion regarding the nature of that service). Except in Hawaii, any description of interLATA or long distance service shall convey that it encompasses both international and state-to-state calls, as well as some intrastate calls where applicable. If the subscriber has additional questions for the carrier's sales representative during the verification, the verifier shall indicate to the subscriber that, upon completion of the verification process, the subscriber will have authorized a carrier change. Third party verifiers may not market the carrier's services by providing additional information, including information regarding preferred carrier freeze procedures.

(iv) *Other requirements for third party verification*. All third party verifications shall be conducted in the same language that was used in the underlying sales transaction and shall be recorded in their entirety. In accordance with the procedures set forth in 64.1120(a)(1)(ii), submitting carriers shall maintain and preserve audio records of verification of subscriber authorization for a minimum period of two years after obtaining such verification. Automated systems must provide consumers with an option to speak with a live person at any time during the call.

(4) Any State-enacted verification procedures applicable to intrastate preferred carrier change orders only.

(d) Telecommunications carriers must provide subscribers the option of using one of the authorization and verification procedures specified in § 64.1120(c) in addition to an electronically signed authorization and verification procedure under 64.1120(c)(1).

(e) A telecommunications carrier may acquire, through a sale or transfer, either part or all of another telecommunica- tions carrier's subscriber base without obtaining each subscriber's authorization and verification in accordance with § 64.1120(c), provided that the acquiring carrier complies with the following streamlined procedures. A telecommunications carrier may not use these streamlined procedures for any fraudulent purpose, including any attempt to avoid liability for violations under part 64, subpart K of the Commission rules.

(1) No later than 30 days before the planned transfer of the affected subscribers from the selling or transferring carrier to the acquiring carrier, the acquiring carrier shall file with the Commission's Office of the Secretary a letter notification in CC Docket No. 00–257 providing the names of the parties to the transaction, the types of telecommunications services to be provided to the affected subscribers, and the date of the transfer of the subscriber base to the acquiring carrier. In the letter notification, the acquiring carrier also shall certify compliance with the requirement to provide advance subscriber notice in accordance with § 64.1120(e)(3), with the obligations specified in that notice, and with other statutory and Commission requirements that apply to this streamlined

process. In addition, the acquiring carrier shall attach a copy of the notice sent to the affected subscribers.

(2) If, subsequent to the filing of the letter notification with the Commission required by § 64.1120(e)(1), any material changes to the required information should develop, the acquiring carrier shall file written notification of these changes with the Commission no more than 10 days after the transfer date announced in the prior notification. The Commission reserves the right to require the acquiring carrier to send an additional notice to the affected subscribers regarding such material changes.

(3) Not later than 30 days before the transfer of the affected subscribers from the selling or transferring carrier to the acquiring carrier, the acquiring carrier shall provide written notice to each affected subscriber of the information specified. The acquiring carrier is required to fulfill the obligations set forth in the advance subscriber notice. The advance subscriber notice shall be provided in a manner consistent with 47 U.S.C. 255 and the Commission's rules regarding accessibility to blind and visually-impaired consumers, 47 CFR 6.3, 6.5 of this chapter. The following information must be included in the advance subscriber notice:

(i) The date on which the acquiring carrier will become the subscriber's new provider of telecommunications service,

(ii) The rates, terms, and conditions of the service(s) to be provided by the acquiring carrier upon the subscriber's transfer to the acquiring carrier, and the means by which the acquiring carrier will notify the subscriber of any change(s) to these rates, terms, and conditions.

(iii) The acquiring carrier will be responsible for any carrier change charges associated with the transfer, except where the carrier is acquiring customers by default, other than through bankruptcy, and state law requires the exiting carrier to pay these costs;

(iv) The subscriber's right to select a different preferred carrier for the telecommunications service(s) at issue, if an alternative carrier is available,

(v) All subscribers receiving the notice, even those who have arranged preferred carrier freezes through their local service providers on the service(s) involved in the transfer, will be transferred to the acquiring carrier, unless they have selected a different carrier before the transfer date; existing preferred carrier freezes on the service(s) involved in the transfer will be lifted; and the subscribers must contact their local service providers to arrange a new freeze.

(vi) Whether the acquiring carrier will be responsible for handling any complaints filed, or otherwise raised, prior to or during the transfer against the selling or transferring carrier, and

(vii) The toll-free customer service telephone number of the acquiring carrier.

[65 FR 47691, Aug. 3, 2000, as amended at 66 FR 12892, Mar. 1, 2001; 66 FR 28124, May 22, 2001; 68 FR 19159, Apr. 18, 2003; 70 FR 12611, Mar. 15, 2005; 73 FR 13149, Mar. 12, 2008]

§ 64.1130 Letter of agency form and content.

(a) A telecommunications carrier may use a written or electronically signed letter of agency to obtain authorization and/or verification of a subscriber's request to change his or her preferred carrier selection. A letter of agency that does not conform with this section is invalid for purposes of this part.

(b) The letter of agency shall be a separate document (or an easily separable document) or located on a separate screen or webpage containing only the authorizing language described in paragraph (e) of this section having the sole purpose of authorizing a telecommunications carrier to initiate a preferred carrier change. The letter of agency must be signed and dated by the subscriber to the telephone line(s) requesting the preferred carrier change.

(c) The letter of agency shall not be combined on the same document, screen, or webpage with inducements of any kind.

(d) Notwithstanding paragraphs (b) and (c) of this section, the letter of agency may be combined with checks that contain only the required letter of

agency language as prescribed in paragraph (e) of this section and the necessary information to make the check a negotiable instrument. The letter of agency check shall not contain any promotional language or material. The letter of agency check shall contain in easily readable, bold-face type on the front of the check, a notice that the subscriber is authorizing a preferred carrier change by signing the check. The letter of agency language shall be placed near the signature line on the back of the check.

(e) At a minimum, the letter of agency must be printed with a type of sufficient size and readable type to be clearly legible and must contain clear and unambiguous language that confirms:

(1) The subscriber's billing name and address and each telephone number to be covered by the preferred carrier change order;

(2) The decision to change the preferred carrier from the current telecommunications carrier to the soliciting telecommunications carrier;

(3) That the subscriber designates [insert the name of the submitting carrier] to act as the subscriber's agent for the preferred carrier change;

(4) That the subscriber understands that only one telecommunications carrier may be designated as the subscriber's interstate or interLATA preferred interexchange carrier for any one telephone number. To the extent that a jurisdiction allows the selection of additional preferred carriers (*e.g.*, local exchange, intraLATA toll, interLATA toll, or international interexchange), the letter of agency must contain separate statements regarding those choices, although a separate letter of agency for each choice is not necessary; and

(5) That the subscriber may consult with the carrier as to whether a fee will apply to the change in the subscriber's preferred carrier.

(f) Any carrier designated in a letter of agency as a preferred carrier must be the carrier directly setting the rates for the subscriber.

(g) Letters of agency shall not suggest or require that a subscriber take some action in order to retain the subscriber's current telecommunications carrier.

(h) If any portion of a letter of agency is translated into another language then all portions of the letter of agency must be translated into that language. Every letter of agency must be translated into the same language as any promotional materials, oral descriptions or instructions provided with the letter of agency.

(i) Letters of agency submitted with an electronically signed authorization must include the consumer disclosures required by Section 101(c) of the Electronic Signatures in Global and National Commerce Act.

(j) A telecommunications carrier shall submit a preferred carrier change order on behalf of a subscriber within no more than 60 days of obtaining a written or electronically signed letter of agency. However, letters of agency for multi-line and/or multi-location business customers that have entered into negotiated agreements with carriers to add presubscribed lines to their business locations during the course of a term agreement shall be valid for the period specified in the term agreement.

[64 FR 7760, Feb. 16, 1999. Redesignated at 65 FR 47692, Aug. 3, 2000, as amended at 66 FR 12893, Mar. 1, 2001; 66 FR 16151, Mar. 23, 2001; 68 FR 19159, Apr. 18, 2003; 73 FR 13149, Mar. 12, 2008]

§ 64.1140 Carrier liability for slamming.

(a) *Carrier Liability for Charges.* Any submitting telecommunications carrier that fails to comply with the procedures prescribed in this part shall be liable to the subscriber's properly authorized carrier in an amount equal to 150% of all charges paid to the submitting telecommunications carrier by such subscriber after such violation, as well as for additional amounts as prescribed in § 64.1170. The remedies provided in this part are in addition to any other remedies available by law.

(b) *Subscriber Liability for Charges.* Any subscriber whose selection of telecommunications services provider is changed without authorization verified in accordance with the procedures set for in this part is liable for charges as follows:

(1) If the subscriber has not already paid charges to the unauthorized carrier, the subscriber is absolved of liability for charges imposed by the unauthorized carrier for service provided during the first 30 days after the unauthorized change. Upon being informed by a subscriber that an unauthorized change has occurred, the authorized carrier, the unauthorized carrier, or the executing carrier shall inform the subscriber of this 30-day absolution period. Any charges imposed by the unauthorized carrier on the subscriber for service provided after this 30–day period shall be paid by the subscriber to the authorized carrier at the rates the subscriber was paying to the authorized carrier at the time of the unauthorized change in accordance with the provisions of § 64.1160(e).

(2) If the subscriber has already paid charges to the unauthorized carrier, and the authorized carrier receives payment from the unauthorized carrier as provided for in paragraph (a) of this section, the authorized carrier shall refund or credit to the subscriber any amounts determined in accordance with the provisions of § 64.1170(c).

(3) If the subscriber has been absolved of liability as prescribed by this section, the unauthorized carrier shall also be liable to the subscriber for any charge required to return the subscriber to his or her properly authorized carrier, if applicable.

[65 FR 47691, Aug. 3, 2000]

§ 64.1150 Procedures for resolution of unauthorized changes in preferred carrier.

(a) *Notification of alleged unauthorized carrier change.* Executing carriers who are informed of an unauthorized carrier change by a subscriber must immediately notify both the authorized and allegedly unauthorized carrier of the incident. This notification must include the identity of both carriers.

(b) *Referral of complaint.* Any carrier, executing, authorized, or allegedly unauthorized, that is informed by a subscriber or an executing carrier of an unauthorized carrier change shall direct that subscriber either to the state commission or, where the state commission has not opted to administer these rules, to the Federal Communications Commission's Consumer & Governmental Affairs Bureau, for resolution of the complaint. Carriers shall also inform the subscriber that he or she may contact and seek resolution from the alleged unauthorized carrier and, in addition, may contact the authorized carrier.

(c) *Notification of receipt of complaint.* Upon receipt of an unauthorized carrier change complaint, the relevant governmental agency will notify the allegedly unauthorized carrier of the complaint and order that the carrier remove all unpaid charges for the first 30 days after the slam from the subscriber's bill pending a determination of whether an unauthorized change, as defined by § 64.1100(e), has occurred, if it has not already done so.

(d) *Proof of verification.* Not more than 30 days after notification of the complaint, or such lesser time as is required by the state commission if a matter is brought before a state commission, the alleged unauthorized carrier shall provide to the relevant government agency a copy of any valid proof of verification of the carrier change. This proof of verification must contain clear and convincing evidence of a valid authorized carrier change, as that term is defined in §§ 64.1120 through 64.1130. The relevant governmental agency will determine whether an unauthorized change, as defined by § 64.1100(e), has occurred using such proof and any evidence supplied by the subscriber. Failure by the carrier to respond or provide proof of verification will be presumed to be clear and convincing evidence of a violation.

(e) *Election of forum.* The Federal Communications Commission will not adjudicate a complaint filed pursuant to § 1.719 or §§ 1.720 through 1.736 of this chapter, involving an alleged unauthorized change, as defined by § 64.1100(e), while a complaint based on the same set of facts is pending with a state commission.

[65 FR 47692, Aug. 3, 2000, as amended at 68 FR 19159, Apr. 18, 2003; 73 FR 13149, Mar. 12, 2008]

§ 64.1160 Absolution procedures where the subscriber has not paid charges.

(a) This section shall only apply after a subscriber has determined that an unauthorized change, as defined by § 64.1100(e), has occurred and the subscriber has not paid charges to the allegedly unauthorized carrier for service provided for 30 days, or a portion thereof, after the unauthorized change occurred.

(b) An allegedly unauthorized carrier shall remove all charges incurred for service provided during the first 30 days after the alleged unauthorized change occurred, as defined by § 64.1100(e), from a subscriber's bill upon notification that such unauthorized change is alleged to have occurred.

(c) An allegedly unauthorized carrier may challenge a subscriber's allegation that an unauthorized change, as defined by § 64.1100(e), occurred. An allegedly unauthorized carrier choosing to challenge such allegation shall immediately notify the complaining subscriber that: The complaining subscriber must file a complaint with a State commission that has opted to administer the FCC's rules, pursuant to § 64.1110, or the FCC within 30 days of either the date of removal of charges from the complaining subscriber's bill in accordance with paragraph (b) of this section, or the date the allegedly unauthorized carrier notifies the complaining subscriber of the requirements of this paragraph, whichever is later; and a failure to file such a complaint within this 30-day time period will result in the charges removed pursuant to paragraph (b) of this section being reinstated on the subscriber's bill and, consequently, the complaining subscriber will only be entitled to remedies for the alleged unauthorized change other than those provided for in § 64.1140(b)(1). No allegedly unauthorized carrier shall reinstate charges to a subscriber's bill pursuant to the provisions of this paragraph without first providing such subscriber with a reasonable opportunity to demonstrate that the requisite complaint was timely filed within the 30-day period described in this paragraph.

(d) If the relevant governmental agency determines after reasonable investigation that an unauthorized change, as defined by § 64.1100(e), has occurred, an order shall be issued providing that the subscriber is entitled to absolution from the charges incurred during the first 30 days after the unauthorized carrier change occurred, and neither the authorized or unauthorized carrier may pursue any collection against the subscriber for those charges.

(e) If the subscriber has incurred charges for more than 30 days after the unauthorized carrier change, the unauthorized carrier must forward the billing information for such services to the authorized carrier, which may bill the subscriber for such services using either of the following means:

(1) The amount of the charge may be determined by a re-rating of the services provided based on what the authorized carrier would have charged the subscriber for the same services had an unauthorized change, as described in § 64.1100(e), not occurred; or

(2) The amount of the charge may be determined using a 50% Proxy Rate as follows: Upon receipt of billing information from the unauthorized carrier, the authorized carrier may bill the subscriber for 50% of the rate the unauthorized carrier would have charged the subscriber for the services provided. However, the subscriber shall have the right to reject use of this 50% proxy method and require that the authorized carrier perform a re-rating of the services provided, as described in paragraph (e)(1) of this section.

(f) If the unauthorized carrier received payment from the subscriber for services provided after the first 30 days after the unauthorized change occurred, the obligations for payments and refunds provided for in § 64.1170 shall apply to those payments. If the relevant governmental agency determines after reasonable investigation that the carrier change was authorized, the carrier may re-bill the subscriber for charges incurred.

(g) When a LEC has assigned a subscriber to a carrier without authorization, and where the subscriber has not paid the unauthorized charges, the LEC

shall switch the subscriber to the desired carrier at no cost to the subscriber, and shall also secure the removal of the unauthorized charges from the subscriber's bill in accordance with the procedures specified in paragraphs (a) through (f) of this section.

[65 FR 47692, Aug. 3, 2000, as amended at 68 FR 19159, Apr. 18, 2003; 73 FR 13149, Mar. 12, 2008]

§ 64.1170 Reimbursement procedures where the subscriber has paid charges.

(a) The procedures in this section shall only apply after a subscriber has determined that an unauthorized change, as defined by § 64.1100(e), has occurred and the subscriber has paid charges to an allegedly unauthorized carrier.

(b) If the relevant governmental agency determines after reasonable investigation that an unauthorized change, as defined by § 64.1100(e), has occurred, it shall issue an order directing the unauthorized carrier to forward to the authorized carrier the following, in addition to any appropriate state remedies:

(1) An amount equal to 150% of all charges paid by the subscriber to the unauthorized carrier; and

(2) Copies of any telephone bills issued from the unauthorized carrier to the subscriber. This order shall be sent to the subscriber, the unauthorized carrier, and the authorized carrier.

(c) Within ten days of receipt of the amount provided for in paragraph (b)(1) of this section, the authorized carrier shall provide a refund or credit to the subscriber in the amount of 50% of all charges paid by the subscriber to the unauthorized carrier. The subscriber has the option of asking the authorized carrier to re-rate the unauthorized carrier's charges based on the rates of the authorized carrier and, on behalf of the subscriber, seek an additional refund from the unauthorized carrier, to the extent that the re-rated amount exceeds the 50% of all charges paid by the subscriber to the unauthorized carrier. The authorized carrier shall also send notice to the relevant governmental agency that it has given a refund or credit to the subscriber.

(d) If an authorized carrier incurs billing and collection expenses in collecting charges from the unauthorized carrier, the unauthorized carrier shall reimburse the authorized carrier for reasonable expenses.

(e) If the authorized carrier has not received payment from the unauthorized carrier as required by paragraph (c) of this section, the authorized carrier is not required to provide any refund or credit to the subscriber. The authorized carrier must, within 45 days of receiving an order as described in paragraph (b) of this section, inform the subscriber and the relevant governmental agency that issued the order if the unauthorized carrier has failed to forward to it the appropriate charges, and also inform the subscriber of his or her right to pursue a claim against the unauthorized carrier for a refund of all charges paid to the unauthorized carrier.

(f) Where possible, the properly authorized carrier must reinstate the subscriber in any premium program in which that subscriber was enrolled prior to the unauthorized change, if the subscriber's participation in that program was terminated because of the unauthorized change. If the subscriber has paid charges to the unauthorized carrier, the properly authorized carrier shall also provide or restore to the subscriber any premiums to which the subscriber would have been entitled had the unauthorized change not occurred. The authorized carrier must comply with the requirements of this section regardless of whether it is able to recover from the unauthorized carrier any charges that were paid by the subscriber.

(g) When a LEC has assigned a subscriber to a non-affiliated carrier without authorization, and when a subscriber has paid the non-affiliated carrier the charges for the billed service, the LEC shall reimburse the subscriber for all charges paid by the subscriber to the unauthorized carrier and shall switch the subscriber to the desired carrier at no cost to the subscriber. When a LEC makes an unauthorized carrier change to an affiliated carrier, and when the customer has paid the charges, the LEC must pay to the authorized carrier 150% of the amounts

collected from the subscriber in accordance with paragraphs (a) through (f) of this section.

[65 FR 47693, Aug. 3, 2000, as amended at 68 FR 19159, Apr. 18, 2003]

§ 64.1190 Preferred carrier freezes.

(a) A preferred carrier freeze (or freeze) prevents a change in a subscriber's preferred carrier selection unless the subscriber gives the carrier from whom the freeze was requested his or her express consent. All local exchange carriers who offer preferred carrier freezes must comply with the provisions of this section.

(b) All local exchange carriers who offer preferred carrier freezes shall offer freezes on a nondiscriminatory basis to all subscribers, regardless of the subscriber's carrier selections.

(c) Preferred carrier freeze procedures, including any solicitation, must clearly distinguish among telecommunications services (*e.g.*, local exchange, intraLATA toll, and interLATA toll) subject to a preferred carrier freeze. The carrier offering the freeze must obtain separate authorization for each service for which a preferred carrier freeze is requested.

(d) *Solicitation and imposition of preferred carrier freezes.* (1) All carrier-provided solicitation and other materials regarding preferred carrier freezes must include:

(i) An explanation, in clear and neutral language, of what a preferred carrier freeze is and what services may be subject to a freeze;

(ii) A description of the specific procedures necessary to lift a preferred carrier freeze; an explanation that these steps are in addition to the Commission's verification rules in §§ 64.1120 and 64.1130 for changing a subscriber's preferred carrier selections; and an explanation that the subscriber will be unable to make a change in carrier selection unless he or she lifts the freeze.

(iii) An explanation of any charges associated with the preferred carrier freeze.

(2) No local exchange carrier shall implement a preferred carrier freeze unless the subscriber's request to impose a freeze has first been confirmed in accordance with one of the following procedures:

(i) The local exchange carrier has obtained the subscriber's written or electronically signed authorization in a form that meets the requirements of § 64.1190(d)(3); or

(ii) The local exchange carrier has obtained the subscriber's electronic authorization, placed from the telephone number(s) on which the preferred carrier freeze is to be imposed, to impose a preferred carrier freeze. The electronic authorization should confirm appropriate verification data (e.g., the subscriber's date of birth or social security number) and the information required in §§ 64.1190(d)(3)(ii)(A) through (D). Telecommunications carriers electing to confirm preferred carrier freeze orders electronically shall establish one or more toll-free telephone numbers exclusively for that purpose. Calls to the number(s) will connect a subscriber to a voice response unit, or similar mechanism that records the required information regarding the preferred carrier freeze request, including automatically recording the originating automatic numbering identification; or

(iii) An appropriately qualified independent third party has obtained the subscriber's oral authorization to submit the preferred carrier freeze and confirmed the appropriate verification data (e.g., the subscriber's date of birth or social security number) and the information required in § 64.1190(d)(3)(ii)(A) through (D). The independent third party must not be owned, managed, or directly controlled by the carrier or the carrier's marketing agent; must not have any financial incentive to confirm preferred carrier freeze requests for the carrier or the carrier's marketing agent; and must operate in a location physically separate from the carrier or the carrier's marketing agent. The content of the verification must include clear and conspicuous confirmation that the subscriber has authorized a preferred carrier freeze.

(3) *Written authorization to impose a preferred carrier freeze.* A local exchange carrier may accept a subscriber's written and signed authorization to impose a freeze on his or her preferred carrier selection. Written authorization that does not conform with this section is

invalid and may not be used to impose a preferred carrier freeze.

(i) The written authorization shall comply with §§ 64.1130(b), (c), and (h) of the Commission's rules concerning the form and content for letters of agency.

(ii) At a minimum, the written authorization must be printed with a readable type of sufficient size to be clearly legible and must contain clear and unambiguous language that confirms:

(A) The subscriber's billing name and address and the telephone number(s) to be covered by the preferred carrier freeze;

(B) The decision to place a preferred carrier freeze on the telephone number(s) and particular service(s). To the extent that a jurisdiction allows the imposition of preferred carrier freezes on additional preferred carrier selections (*e.g.*, for local exchange, intraLATA toll, and interLATA toll), the authorization must contain separate statements regarding the particular selections to be frozen;

(C) That the subscriber understands that she or he will be unable to make a change in carrier selection unless she or he lifts the preferred carrier freeze; and

(D) That the subscriber understands that any preferred carrier freeze may involve a charge to the subscriber.

(e) *Procedures for lifting preferred carrier freezes.* All local exchange carriers who offer preferred carrier freezes must, at a minimum, offer subscribers the following procedures for lifting a preferred carrier freeze:

(1) A local exchange carrier administering a preferred carrier freeze must accept a subscriber's written or electronically signed authorization stating his or her intent to lift a preferred carrier freeze; and

(2) A local exchange carrier administering a preferred carrier freeze must accept a subscriber's oral authorization stating her or his intent to lift a preferred carrier freeze and must offer a mechanism that allows a submitting carrier to conduct a three-way conference call with the carrier administering the freeze and the subscriber in order to lift a freeze. When engaged in oral authorization to lift a preferred carrier freeze, the carrier administering the freeze shall confirm appropriate verification data (e.g., the subscriber's date of birth or social security number) and the subscriber's intent to lift the particular freeze.

[64 FR 7762, Feb. 16, 1999, as amended at 66 FR 12893, Mar. 1, 2001; 73 FR 13150, Mar. 12, 2008]

§ 64.1195 Registration requirement.

(a) *Applicability.* A telecommunications carrier that will provide interstate telecommunications service shall file the registration information described in paragraph (b) of this section in accordance with the procedures described in paragraphs (c) and (g) of this section. Any telecommunications carrier already providing interstate telecommunications service on the effective date of these rules shall submit the relevant portion of its FCC Form 499–A in accordance with paragraphs (b) and (c) of this section.

(b) *Information required for purposes of part 64.* A telecommunications carrier that is subject to the registration requirement pursuant to paragraph (a) of this section shall provide the following information:

(1) The carrier's business name(s) and primary address;

(2) The names and business addresses of the carrier's chief executive officer, chairman, and president, or, in the event that a company does not have such executives, three similarly senior-level officials of the company;

(3) The carrier's regulatory contact and/or designated agent;

(4) All names that the carrier has used in the past; and

(5) The state(s) in which the carrier provides telecommunications service.

(c) *Submission of registration.* A carrier that is subject to the registration requirement pursuant to paragraph (a) of this section shall submit the information described in paragraph (b) of this section in accordance with the Instructions to FCC Form 499–A. FCC Form 499–A must be submitted under oath and penalty of perjury.

(d) *Rejection of registration.* The Commission may reject or suspend a carrier's registration for any of the reasons identified in paragraphs (e) or (f) of this section.

(e) *Revocation or suspension of operating authority.* After notice and opportunity to respond, the Commission may revoke or suspend the authorization of a carrier to provide service if the carrier provides materially false or incomplete information in its FCC Form 499–A or otherwise fails to comply with paragraphs (a), (b), and (c) of this section.

(f) *Imposition of fine.* After notice and opportunity to respond, the Commission may impose a fine on a carrier that is subject to the registration requirement pursuant to paragraph (a) of this section if that carrier fails to submit an FCC Form 499–A in accordance with paragraphs (a), (b), and (c) of this section.

(g) *Changes in information.* A carrier must notify the Commission of any changes to the information provided pursuant to paragraph (b) of this section within no more than one week of the change. Carriers may satisfy this requirement by filing the relevant portion of FCC Form 499–A in accordance with the Instructions to such form.

(h) *Duty to confirm registration of other carriers.* The Commission shall make available to the public a comprehensive listing of registrants and the information that they have provided pursuant to paragraph (b) of this section. A telecommunications carrier providing telecommunications service for resale shall have an affirmative duty to ascertain whether a potential carrier-customer (*i.e.*, reseller) that is subject to the registration requirement pursuant to paragraph (a) of this section has filed an FCC Form 499–A with the Commission prior to offering service to that carrier-customer. After notice and opportunity to respond, the Commission may impose a fine on a carrier for failure to confirm the registration status of a potential carrier-customer before providing that carrier-customer with service.

[66 FR 12894, Mar. 1, 2001]

Subpart L—Restrictions on Telemarketing, Telephone Solicitation, and Facsimile Advertising

§ 64.1200 Delivery restrictions.

(a) No person or entity may:

(1) Except as provided in paragraph (a)(2) of this section, initiate any telephone call (other than a call made for emergency purposes or is made with the prior express consent of the called party) using an automatic telephone dialing system or an artificial or prerecorded voice;

(i) To any emergency telephone line, including any 911 line and any emergency line of a hospital, medical physician or service office, health care facility, poison control center, or fire protection or law enforcement agency;

(ii) To the telephone line of any guest room or patient room of a hospital, health care facility, elderly home, or similar establishment; or

(iii) To any telephone number assigned to a paging service, cellular telephone service, specialized mobile radio service, or other radio common carrier service, or any service for which the called party is charged for the call.

(iv) A person will not be liable for violating the prohibition in paragraph (a)(1)(iii) of this section when the call is placed to a wireless number that has been ported from wireline service and such call is a voice call; not knowingly made to a wireless number; and made within 15 days of the porting of the number from wireline to wireless service, provided the number is not already on the national do-not-call registry or caller's company-specific do-not-call list.

(2) Initiate, or cause to be initiated, any telephone call that includes or introduces an advertisement or constitutes telemarketing, using an automatic telephone dialing system or an artificial or prerecorded voice, to any of the lines or telephone numbers described in paragraphs (a)(1)(i) through (iii) of this section, other than a call made with the prior express written consent of the called party or the prior express consent of the called party when the call is made by or on behalf of a tax-exempt nonprofit organization,

or a call that delivers a ''health care'' message made by, or on behalf of, a ''covered entity'' or its ''business associate,'' as those terms are defined in the HIPAA Privacy Rule, 45 CFR 160.103.

(3) Initiate any telephone call to any residential line using an artificial or prerecorded voice to deliver a message without the prior express written consent of the called party, unless the call;

(i) Is made for emergency purposes;

(ii) Is not made for a commercial purpose;

(iii) Is made for a commercial purpose but does not include or introduce an advertisement or constitute telemarketing;

(iv) Is made by or on behalf of a tax-exempt nonprofit organization; or

(v) Delivers a ''health care'' message made by, or on behalf of, a ''covered entity'' or its ''business associate,'' as those terms are defined in the HIPAA Privacy Rule, 45 CFR 160.103.

(4) Use a telephone facsimile machine, computer, or other device to send an unsolicited advertisement to a telephone facsimile machine, unless—

(i) The unsolicited advertisement is from a sender with an established business relationship, as defined in paragraph (f)(6) of this section, with the recipient; and

(ii) The sender obtained the number of the telephone facsimile machine through—

(A) The voluntary communication of such number by the recipient directly to the sender, within the context of such established business relationship; or

(B) A directory, advertisement, or site on the Internet to which the recipient voluntarily agreed to make available its facsimile number for public distribution. If a sender obtains the facsimile number from the recipient's own directory, advertisement, or Internet site, it will be presumed that the number was voluntarily made available for public distribution, unless such materials explicitly note that unsolicited advertisements are not accepted at the specified facsimile number. If a sender obtains the facsimile number from other sources, the sender must take reasonable steps to verify that the recipient agreed to make the number available for public distribution.

(C) This clause shall not apply in the case of an unsolicited advertisement that is sent based on an established business relationship with the recipient that was in existence before July 9, 2005 if the sender also possessed the facsimile machine number of the recipient before July 9, 2005. There shall be a rebuttable presumption that if a valid established business relationship was formed prior to July 9, 2005, the sender possessed the facsimile number prior to such date as well; and

(iii) The advertisement contains a notice that informs the recipient of the ability and means to avoid future unsolicited advertisements. A notice contained in an advertisement complies with the requirements under this paragraph only if—

(A) The notice is clear and conspicuous and on the first page of the advertisement;

(B) The notice states that the recipient may make a request to the sender of the advertisement not to send any future advertisements to a telephone facsimile machine or machines and that failure to comply, within 30 days, with such a request meeting the requirements under paragraph (a)(4)(v) of this section is unlawful;

(C) The notice sets forth the requirements for an opt-out request under paragraph (a)(4)(v) of this section;

(D) The notice includes—

(*1*) A domestic contact telephone number and facsimile machine number for the recipient to transmit such a request to the sender; and

(*2*) If neither the required telephone number nor facsimile machine number is a toll-free number, a separate cost-free mechanism including a Web site address or email address, for a recipient to transmit a request pursuant to such notice to the sender of the advertisement. A local telephone number also shall constitute a cost-free mechanism so long as recipients are local and will not incur any long distance or other separate charges for calls made to such number; and

(E) The telephone and facsimile numbers and cost-free mechanism identified in the notice must permit an individual or business to make an opt-out request 24 hours a day, 7 days a week.

(iv) A facsimile advertisement that is sent to a recipient that has provided prior express invitation or permission to the sender must include an opt-out notice that complies with the requirements in paragraph (a)(4)(iii) of this section.

(v) A request not to send future unsolicited advertisements to a telephone facsimile machine complies with the requirements under this subparagraph only if—

(A) The request identifies the telephone number or numbers of the telephone facsimile machine or machines to which the request relates;

(B) The request is made to the telephone number, facsimile number, Web site address or email address identified in the sender's facsimile advertisement; and

(C) The person making the request has not, subsequent to such request, provided express invitation or permission to the sender, in writing or otherwise, to send such advertisements to such person at such telephone facsimile machine.

(vi) A sender that receives a request not to send future unsolicited advertisements that complies with paragraph (a)(4)(v) of this section must honor that request within the shortest reasonable time from the date of such request, not to exceed 30 days, and is prohibited from sending unsolicited advertisements to the recipient unless the recipient subsequently provides prior express invitation or permission to the sender. The recipient's opt-out request terminates the established business relationship exemption for purposes of sending future unsolicited advertisements. If such requests are recorded or maintained by a party other than the sender on whose behalf the unsolicited advertisement is sent, the sender will be liable for any failures to honor the opt-out request.

(vii) A facsimile broadcaster will be liable for violations of paragraph (a)(4) of this section, including the inclusion of opt-out notices on unsolicited advertisements, if it demonstrates a high degree of involvement in, or actual notice of, the unlawful activity and fails to take steps to prevent such facsimile transmissions.

(5) Use an automatic telephone dialing system in such a way that two or more telephone lines of a multi-line business are engaged simultaneously.

(6) Disconnect an unanswered telemarketing call prior to at least 15 seconds or four (4) rings.

(7) Abandon more than three percent of all telemarketing calls that are answered live by a person, as measured over a 30-day period for a single calling campaign. If a single calling campaign exceeds a 30-day period, the abandonment rate shall be calculated separately for each successive 30-day period or portion thereof that such calling campaign continues. A call is ''abandoned'' if it is not connected to a live sales representative within two (2) seconds of the called person's completed greeting.

(i) Whenever a live sales representative is not available to speak with the person answering the call, within two (2) seconds after the called person's completed greeting, the telemarketer or the seller must provide:

(A) A prerecorded identification and opt-out message that is limited to disclosing that the call was for ''telemarketing purposes'' and states the name of the business, entity, or individual on whose behalf the call was placed, and a telephone number for such business, entity, or individual that permits the called person to make a do-not-call request during regular business hours for the duration of the telemarketing campaign; provided, that, such telephone number may not be a 900 number or any other number for which charges exceed local or long distance transmission charges, and

(B) An automated, interactive voice- and/or key press-activated opt-out mechanism that enables the called person to make a do-not-call request prior to terminating the call, including brief explanatory instructions on how to use such mechanism. When the called person elects to opt-out using such mechanism, the mechanism must automatically record the called person's number to the seller's do-not-call list and immediately terminate the call.

(ii) A call for telemarketing purposes that delivers an artificial or prerecorded voice message to a residential telephone line or to any of the lines or telephone numbers described in paragraphs (a)(1)(i) through (iii) of this section after the subscriber to such line has granted prior express written consent for the call to be made shall not be considered an abandoned call if the message begins within two (2) seconds of the called person's completed greeting.

(iii) The seller or telemarketer must maintain records establishing compliance with paragraph (a)(7) of this section.

(iv) Calls made by or on behalf of tax-exempt nonprofit organizations are not covered by this paragraph (a)(7).

(8) Use any technology to dial any telephone number for the purpose of determining whether the line is a facsimile or voice line.

(b) All artificial or prerecorded voice telephone messages shall:

(1) At the beginning of the message, state clearly the identity of the business, individual, or other entity that is responsible for initiating the call. If a business is responsible for initiating the call, the name under which the entity is registered to conduct business with the State Corporation Commission (or comparable regulatory authority) must be stated;

(2) During or after the message, state clearly the telephone number (other than that of the autodialer or prerecorded message player that placed the call) of such business, other entity, or individual. The telephone number provided may not be a 900 number or any other number for which charges exceed local or long distance transmission charges. For telemarketing messages to residential telephone subscribers, such telephone number must permit any individual to make a do-not-call request during regular business hours for the duration of the telemarketing campaign; and

(3) In every case where the artificial or prerecorded voice telephone message includes or introduces an advertisement or constitutes telemarketing and is delivered to a residential telephone line or any of the telephone numbers described in paragraphs (a)(1)(i) through (iii), provide an automated, interactive voice- and/or key press-activated opt-out mechanism for the called person to make a do-not-call request, including brief explanatory instructions on how to use such mechanism, within two (2) seconds of providing the identification information required in paragraph (b)(1) of this section. When the called person elects to opt out using such mechanism, the mechanism, must automatically record the called person's number to the seller's do-not-call list and immediately terminate the call. When the artificial or prerecorded voice telephone message is left on an answering machine or a voice mail service, such message must also provide a toll free number that enables the called person to call back at a later time and connect directly to the automated, interactive voice- and/or key press-activated opt-out mechanism and automatically record the called person's number to the seller's do-not-call list.

(c) No person or entity shall initiate any telephone solicitation to:

(1) Any residential telephone subscriber before the hour of 8 a.m. or after 9 p.m. (local time at the called party's location), or

(2) A residential telephone subscriber who has registered his or her telephone number on the national do-not-call registry of persons who do not wish to receive telephone solicitations that is maintained by the Federal Government. Such do-not-call registrations must be honored indefinitely, or until the registration is cancelled by the consumer or the telephone number is removed by the database administrator. Any person or entity making telephone solicitations (or on whose behalf telephone solicitations are made) will not be liable for violating this requirement if:

(i) It can demonstrate that the violation is the result of error and that as part of its routine business practice, it meets the following standards:

(A) Written procedures. It has established and implemented written procedures to comply with the national do-not-call rules;

(B) Training of personnel. It has trained its personnel, and any entity

assisting in its compliance, in procedures established pursuant to the national do-not-call rules;

(C) Recording. It has maintained and recorded a list of telephone numbers that the seller may not contact;

(D) Accessing the national do-not-call database. It uses a process to prevent telephone solicitations to any telephone number on any list established pursuant to the do-not-call rules, employing a version of the national do-not-call registry obtained from the administrator of the registry no more than 31 days prior to the date any call is made, and maintains records documenting this process.

NOTE TO PARAGRAPH (c)(2)(i)(D): The requirement in paragraph 64.1200(c)(2)(i)(D) for persons or entities to employ a version of the national do-not-call registry obtained from the administrator no more than 31 days prior to the date any call is made is effective January 1, 2005. Until January 1, 2005, persons or entities must continue to employ a version of the registry obtained from the administrator of the registry no more than three months prior to the date any call is made.

(E) Purchasing the national do-not-call database. It uses a process to ensure that it does not sell, rent, lease, purchase or use the national do-not-call database, or any part thereof, for any purpose except compliance with this section and any such state or federal law to prevent telephone solicitations to telephone numbers registered on the national database. It purchases access to the relevant do-not-call data from the administrator of the national database and does not participate in any arrangement to share the cost of accessing the national database, including any arrangement with telemarketers who may not divide the costs to access the national database among various client sellers; or

(ii) It has obtained the subscriber's prior express invitation or permission. Such permission must be evidenced by a signed, written agreement between the consumer and seller which states that the consumer agrees to be contacted by this seller and includes the telephone number to which the calls may be placed; or

(iii) The telemarketer making the call has a personal relationship with the recipient of the call.

(d) No person or entity shall initiate any call for telemarketing purposes to a residential telephone subscriber unless such person or entity has instituted procedures for maintaining a list of persons who request not to receive telemarketing calls made by or on behalf of that person or entity. The procedures instituted must meet the following minimum standards:

(1) *Written policy*. Persons or entities making calls for telemarketing purposes must have a written policy, available upon demand, for maintaining a do-not-call list.

(2) *Training of personnel engaged in telemarketing*. Personnel engaged in any aspect of telemarketing must be informed and trained in the existence and use of the do-not-call list.

(3) *Recording, disclosure of do-not-call requests*. If a person or entity making a call for telemarketing purposes (or on whose behalf such a call is made) receives a request from a residential telephone subscriber not to receive calls from that person or entity, the person or entity must record the request and place the subscriber's name, if provided, and telephone number on the do-not-call list at the time the request is made. Persons or entities making calls for telemarketing purposes (or on whose behalf such calls are made) must honor a residential subscriber's do-not-call request within a reasonable time from the date such request is made. This period may not exceed thirty days from the date of such request. If such requests are recorded or maintained by a party other than the person or entity on whose behalf the telemarketing call is made, the person or entity on whose behalf the telemarketing call is made will be liable for any failures to honor the do-not-call request. A person or entity making a call for telemarketing purposes must obtain a consumer's prior express permission to share or forward the consumer's request not to be called to a party other than the person or entity on whose behalf a telemarketing call is made or an affiliated entity.

(4) *Identification of sellers and telemarketers*. A person or entity making a call for telemarketing purposes must provide the called party with the name of the individual caller, the name of

the person or entity on whose behalf the call is being made, and a telephone number or address at which the person or entity may be contacted. The telephone number provided may not be a 900 number or any other number for which charges exceed local or long distance transmission charges.

(5) *Affiliated persons or entities.* In the absence of a specific request by the subscriber to the contrary, a residential subscriber's do-not-call request shall apply to the particular business entity making the call (or on whose behalf a call is made), and will not apply to affiliated entities unless the consumer reasonably would expect them to be included given the identification of the caller and the product being advertised.

(6) *Maintenance of do-not-call lists.* A person or entity making calls for telemarketing purposes must maintain a record of a consumer's request not to receive further telemarketing calls. A do-not-call request must be honored for 5 years from the time the request is made.

(7) Tax-exempt nonprofit organizations are not required to comply with 64.1200(d).

(e) The rules set forth in paragraph (c) and (d) of this section are applicable to any person or entity making telephone solicitations or telemarketing calls to wireless telephone numbers to the extent described in the Commission's Report and Order, CG Docket No. 02–278, FCC 03–153, ''Rules and Regulations Implementing the Telephone Consumer Protection Act of 1991.''

(f) As used in this section:

(1) The term *advertisement* means any material advertising the commercial availability or quality of any property, goods, or services.

(2) The terms *automatic telephone dialing system* and *autodialer* mean equipment which has the capacity to store or produce telephone numbers to be called using a random or sequential number generator and to dial such numbers.

(3) The term *clear and conspicuous* means a notice that would be apparent to the reasonable consumer, separate and distinguishable from the advertising copy or other disclosures. With respect to facsimiles and for purposes of paragraph (a)(4)(iii)(A) of this section, the notice must be placed at either the top or bottom of the facsimile.

(4) The term *emergency purposes* means calls made necessary in any situation affecting the health and safety of consumers.

(5) The term *established business relationship* for purposes of telephone solicitations means a prior or existing relationship formed by a voluntary two-way communication between a person or entity and a residential subscriber with or without an exchange of consideration, on the basis of the subscriber's purchase or transaction with the entity within the eighteen (18) months immediately preceding the date of the telephone call or on the basis of the subscriber's inquiry or application regarding products or services offered by the entity within the three months immediately preceding the date of the call, which relationship has not been previously terminated by either party.

(i) The subscriber's seller-specific do-not-call request, as set forth in paragraph (d)(3) of this section, terminates an established business relationship for purposes of telemarketing and telephone solicitation even if the subscriber continues to do business with the seller.

(ii) The subscriber's established business relationship with a particular business entity does not extend to affiliated entities unless the subscriber would reasonably expect them to be included given the nature and type of goods or services offered by the affiliate and the identity of the affiliate.

(6) The term *established business relationship* for purposes of paragraph (a)(4) of this section on the sending of facsimile advertisements means a prior or existing relationship formed by a voluntary two-way communication between a person or entity and a business or residential subscriber with or without an exchange of consideration, on the basis of an inquiry, application, purchase or transaction by the business or residential subscriber regarding products or services offered by such person or entity, which relationship has not been previously terminated by either party.

(7) The term *facsimile broadcaster* means a person or entity that transmits messages to telephone facsimile machines on behalf of another person or entity for a fee.

(8) The term *prior express written consent* means an agreement, in writing, bearing the signature of the person called that clearly authorizes the seller to deliver or cause to be delivered to the person called advertisements or telemarketing messages using an automatic telephone dialing system or an artificial or prerecorded voice, and the telephone number to which the signatory authorizes such advertisements or telemarketing messages to be delivered.

(i) The written agreement shall include a clear and conspicuous disclosure informing the person signing that:

(A) By executing the agreement, such person authorizes the seller to deliver or cause to be delivered to the signatory telemarketing calls using an automatic telephone dialing system or an artificial or prerecorded voice; and

(B) The person is not required to sign the agreement (directly or indirectly), or agree to enter into such an agreement as a condition of purchasing any property, goods, or services.

(ii) The term ''signature'' shall include an electronic or digital form of signature, to the extent that such form of signature is recognized as a valid signature under applicable federal law or state contract law.

(9) The term *seller* means the person or entity on whose behalf a telephone call or message is initiated for the purpose of encouraging the purchase or rental of, or investment in, property, goods, or services, which is transmitted to any person.

(10) The term *sender* for purposes of paragraph (a)(4) of this section means the person or entity on whose behalf a facsimile unsolicited advertisement is sent or whose goods or services are advertised or promoted in the unsolicited advertisement.

(11) The term *telemarketer* means the person or entity that initiates a telephone call or message for the purpose of encouraging the purchase or rental of, or investment in, property, goods, or services, which is transmitted to any person.

(12) The term *telemarketing* means the initiation of a telephone call or message for the purpose of encouraging the purchase or rental of, or investment in, property, goods, or services, which is transmitted to any person.

(13) The term *telephone facsimile machine* means equipment which has the capacity to transcribe text or images, or both, from paper into an electronic signal and to transmit that signal over a regular telephone line, or to transcribe text or images (or both) from an electronic signal received over a regular telephone line onto paper.

(14) The term *telephone solicitation* means the initiation of a telephone call or message for the purpose of encouraging the purchase or rental of, or investment in, property, goods, or services, which is transmitted to any person, but such term does not include a call or message:

(i) To any person with that person's prior express invitation or permission;

(ii) To any person with whom the caller has an established business relationship; or

(iii) By or on behalf of a tax-exempt nonprofit organization.

(15) The term *unsolicited advertisement* means any material advertising the commercial availability or quality of any property, goods, or services which is transmitted to any person without that person's prior express invitation or permission, in writing or otherwise.

(16) The term *personal relationship* means any family member, friend, or acquaintance of the telemarketer making the call.

(g) Beginning January 1, 2004, common carriers shall:

(1) When providing local exchange service, provide an annual notice, via an insert in the subscriber's bill, of the right to give or revoke a notification of an objection to receiving telephone solicitations pursuant to the national do-not-call database maintained by the federal government and the methods by which such rights may be exercised by the subscriber. The notice must be clear and conspicuous and include, at a minimum, the Internet address and toll-free number that residential telephone subscribers may use to register on the national database.

(2) When providing service to any person or entity for the purpose of making telephone solicitations, make a one-time notification to such person or entity of the national do-not-call requirements, including, at a minimum, citation to 47 CFR 64.1200 and 16 CFR 310. Failure to receive such notification will not serve as a defense to any person or entity making telephone solicitations from violations of this section.

(h) The administrator of the national do-not-call registry that is maintained by the federal government shall make the telephone numbers in the database available to the States so that a State may use the telephone numbers that relate to such State as part of any database, list or listing system maintained by such State for the regulation of telephone solicitations.

[68 FR 44177, July 25, 2003, as amended at 68 FR 59131, Oct. 14, 2003; 69 FR 60316, Oct. 8, 2004; 70 FR 19337, Apr. 13, 2005; 71 FR 25977, May 3, 2006; 71 FR 56893, Sept. 28, 2006; 71 FR 75122, Dec. 14, 2006; 73 FR 40185, July 14, 2008; 77 FR 34246, June 11, 2012]

§ 64.1201 Restrictions on billing name and address disclosure.

(a) As used in this section:

(1) The term *billing name and address* means the name and address provided to a local exchange company by each of its local exchange customers to which the local exchange company directs bills for its services.

(2) The term ''telecommunications service provider'' means interexchange carriers, operator service providers, enhanced service providers, and any other provider of interstate telecommunications services.

(3) The term *authorized billing agent* means a third party hired by a telecommunications service provider to perform billing and collection services for the telecommunications service provider.

(4) The term *bulk basis* means billing name and address information for all the local exchange service subscribers of a local exchange carrier.

(5) The term *LEC joint use card* means a calling card bearing an account number assigned by a local exchange carrier, used for the services of the local exchange carrier and a designated interexchange carrier, and validated by access to data maintained by the local exchange carrier.

(b) No local exchange carrier providing billing name and address shall disclose billing name and address information to any party other than a telecommunications service provider or an authorized billing and collection agent of a telecommunications service provider.

(c)(1) No telecommunications service provider or authorized billing and collection agent of a telecommunications service provider shall use billing name and address information for any purpose other than the following:

(i) Billing customers for using telecommunications services of that service provider and collecting amounts due;

(ii) Any purpose associated with the ''equal access'' requirement of *United States* v. *AT&T* 552 F.Supp. 131 (D.D.C. 1982); and

(iii) Verification of service orders of new customers, identification of customers who have moved to a new address, fraud prevention, and similar nonmarketing purposes.

(2) In no case shall any telecommunications service provider or authorized billing and collection agent of a telecommunications service provider disclose the billing name and address information of any subscriber to any third party, except that a telecommunications service provider may disclose billing name and address information to its authorized billing and collection agent.

(d) [Reserved]

(e)(1) All local exchange carriers providing billing name and address information shall notify their subscribers that:

(i) The subscriber's billing name and address will be disclosed, pursuant to Policies and Rules Concerning Local Exchange Carrier Validation and Billing Information for Joint Use Calling Cards, CC Docket No. 91–115, FCC 93–254, adopted May 13, 1993, whenever the subscriber uses a LEC joint use card to pay for services obtained from the telecommunications service provider, and

(ii) The subscriber's billing name and address will be disclosed, pursuant to Policies and Rules Concerning Local

Exchange Carrier Validation and Billing Information for Joint Use Calling Cards, CC Docket No. 91–115, FCC 93–254, adopted May 13, 1993, whenever the subscriber accepts a third party or collect call to a telephone station provided by the LEC to the subscriber.

(2) In addition to the notification specified in paragraph (e)(1) of this section, all local exchange carriers providing billing name and address information shall notify their subscribers with unlisted or nonpublished telephone numbers that:

(i) Customers have a right to request that their BNA not be disclosed, and that customers may prevent BNA disclosure for third party and collect calls as well as calling card calls;

(ii) LECs will presume that unlisted and nonpublished end users consent to disclosure and use of their BNA if customers do not affirmatively request that their BNA not be disclosed; and

(iii) The presumption in favor of consent for disclosure will begin 30 days after customers receive notice.

(3) No local exchange carrier shall disclose the billing name and address information associated with any calling card call made by any subscriber who has affirmatively withheld consent for disclosure of BNA information, or for any third party or collect call charged to any subscriber who has affirmatively withheld consent for disclosure of BNA information.

[53 FR 36145, July 6, 1993, as amended at 58 FR 65671, Dec. 16, 1993; 61 FR 8880, Mar. 6, 1996]

§ 64.1202 Public safety answering point do-not-call registry.

(a) As used in this section, the following terms are defined as:

(1) *Operators of automatic dialing or robocall equipment*. Any person or entity who uses an automatic telephone dialing system, as defined in section 227(a)(1) of the Communications Act of 1934, as amended, to make telephone calls with such equipment.

(2) *Public Safety Answering Point (PSAP)*. A facility that has been designated to receive emergency calls and route them to emergency service personnel pursuant to section 222(h)(4) of the Communications Act of 1934, as amended. As used in this section, this term includes both primary and secondary PSAPs.

(3) *Emergency purpose*. A call made necessary in any situation affecting the health and safety of any person.

(b) *PSAP numbers and registration*. Each PSAP may designate a representative who shall be required to file a certification with the administrator of the PSAP registry, under penalty of law, that they are authorized and eligible to place numbers onto the PSAP Do-Not-Call registry on behalf of that PSAP. The designated PSAP representative shall provide contact information, including the PSAP represented, contact name, title, address, telephone number, and email address. Verified PSAPs shall be permitted to upload to the registry any PSAP telephone numbers associated with the provision of emergency services or communications with other public safety agencies. On an annual basis designated PSAP representatives shall access the registry, review their numbers placed on the registry to ensure that they remain eligible for inclusion on the registry, and remove ineligible numbers.

(c) *Prohibiting the use of autodialers to contact registered PSAP numbers*. An operator of automatic dialing or robocall equipment is prohibited from using such equipment to contact any telephone number registered on the PSAP Do-Not-Call registry other than for an emergency purpose. This prohibition encompasses both voice and text calls.

(d) *Granting and tracking access to the PSAP registry*. An operator of automatic dialing or robocall equipment may not obtain access or use the PSAP Do-Not-Call registry until it provides to the designated registry administrator contact information that includes the operator's name and all alternative names under which the registrant operates, a business address, a contact person, the contact person's telephone number, the operator's email address, and all outbound telephone numbers used to place autodialed calls, including both actual originating numbers and numbers that are displayed on caller identification services, and thereafter obtains a unique identification number or password from the designated registry administrator. All such contact information provided to

the designated registry administrator must be updated within 30 days of any change to such information. In addition, an operator of automatic dialing equipment must certify when it accesses the registry, under penalty of law, that it is accessing the registry solely to prevent autodialed calls to numbers on the registry.

(e) *Accessing the registry*. An operator of automatic dialing equipment or robocall equipment shall, to prevent such calls to any telephone number on the registry, access and employ a version of the PSAP Do-Not-Call registry obtained from the registry administrator no more than 31 days prior to the date any call is made, and shall maintain records documenting this process. It shall not be a violation of paragraph (c) of this section to contact a number added to the registry subsequent to the last required access to the registry by operators of automatic dialing or robocall equipment.

(f) *Restrictions on disclosing or dissemination of the PSAP registry*. No person or entity, including an operator of automatic dialing equipment or robocall equipment, may sell, rent, lease, purchase, share, or use the PSAP Do-Not-Call registry, or any part thereof, for any purpose except to comply with this section and any such state or Federal law enacted to prevent autodialed calls to telephone numbers in the PSAP registry.

[77 FR 71137, Nov. 29, 2012]

Subpart M—Provision of Payphone Service

§ 64.1300 Payphone compensation obligation.

(a) For purposes of this subpart, a Completing Carrier is a long distance carrier or switch-based long distance reseller that completes a coinless access code or subscriber toll-free payphone call or a local exchange carrier that completes a local, coinless access code or subscriber toll-free payphone call.

(b) Except as provided herein, a Completing Carrier that completes a coinless access code or subscriber toll-free payphone call from a switch that the Completing Carrier either owns or leases shall compensate the payphone service provider for that call at a rate agreed upon by the parties by contract.

(c) The compensation obligation set forth herein shall not apply to calls to emergency numbers, calls by hearing disabled persons to a telecommunications relay service or local calls for which the caller has made the required coin deposit.

(d) In the absence of an agreement as required by paragraph (b) of this section, the carrier is obligated to compensate the payphone service provider at a per-call rate of $.494.

[71 FR 3014, Jan. 19, 2006]

§ 64.1301 Per-payphone compensation.

(a) *Interim access code and subscriber 800 calls*. In the absence of a negotiated agreement to pay a different amount, each entity listed in Appendix A of the *Fifth Order on Reconsideration and Order on Remand* in CC Docket No. 96–128, FCC 02–292, must pay default compensation to payphone service providers for payphone access code calls and payphone subscriber 800 calls for the period beginning November 7, 1996, and ending October 6, 1997, in the amount listed in Appendix A per payphone per month. A complete copy of Appendix A is available at *www.fcc.gov*.

(b) *Interim payphone compensation for inmate calls*. In the absence of a negotiated agreement to pay a different amount, if a payphone service provider providing inmate service was not compensated for calls originating at an inmate telephone during the period starting on November 7, 1996, and ending on October 6, 1997, an interexchange carrier to which the inmate telephone was presubscribed during this same time period must compensate the payphone service provider providing inmate service at the default rate of $0.238 per inmate call originating during the same time period, except that a payphone service provider that is affiliated with a local exchange carrier is not eligible to receive payphone compensation prior to April 16, 1997, or, in the alternative, the first day following both the termination of subsidies and payphone reclassification and transfer, whichever date is latest.

(c) *Interim compensation for 0+ payphone calls.* In the absence of a negotiated agreement to pay a different amount, if a payphone service provider was not compensated for 0+ calls originating during the period starting on November 7, 1996, and ending on October 6, 1997, an interexchange carrier to which the payphone was presubscribed during this same time period must compensate the payphone service provider in the default amount of $4.2747 per payphone per month during the same time period, except that a payphone service provider that is affiliated with a local exchange carrier is not eligible to receive payphone compensation prior to April 16, 1997, or, in the alternative, the first day following both the termination of subsidies and payphone reclassification and transfer, whichever date is latest.

(d) *Intermediate access code and subscriber 800 calls.* In the absence of a negotiated agreement to pay a different amount, each entity listed in Appendix B of the *Fifth Order on Reconsideration and Order on Remand* in CC Docket No. 96–128, FCC 02–292, must pay default compensation to payphone service providers for access code calls and payphone subscriber 800 calls for the period beginning October 7, 1997, and ending April 20, 1999, in the amount listed in Appendix B for any payphone for any month during which per-call compensation for that payphone for that month was not paid by the listed entity. A complete copy of Appendix B is available at *www.fcc.gov*.

(e) *Post-intermediate access code and subscriber 800 calls.* In the absence of a negotiated agreement to pay a different amount, each entity listed in Appendix C of the *Fifth Order on Reconsideration and Order on Remand* in CC Docket No. 96–128, FCC 02–292, must pay default compensation to payphone service providers for access code calls and payphone subscriber 800 calls for the period beginning April 21, 1999, in the amount listed in Appendix C for any payphone for any month during which per-call compensation for that payphone for that month was or is not paid by the listed entity. A complete copy of Appendix C is available at *www.fcc.gov*.

[67 FR 71890, Dec. 3, 2002]

§ 64.1310 Payphone compensation procedures.

(a) Unless the payphone service provider consents to an alternative compensation arrangement, each Completing Carrier identified in § 64.1300(a) shall compensate the payphone service provider in accordance with paragraphs (a)(1) through (a)(4) of this section. A payphone service provider may not unreasonably withhold its consent to an alternative compensation arrangement.

(1) Each Completing Carrier shall establish a call tracking system that accurately tracks coinless access code or subscriber toll-free payphone calls to completion.

(2) Each Completing Carrier shall pay compensation to payphone service providers on a quarterly basis for each completed payphone call identified in the Completing Carrier's quarterly report required by paragraph (a)(4) of this section.

(3) When payphone compensation is tendered for a quarter, the chief financial officer of the Completing Carrier shall submit to each payphone service provider to which compensation is tendered a sworn statement that the payment amount for that quarter is accurate and is based on 100% of all completed calls that originated from that payphone service provider's payphones. Instead of transmitting individualized statements to each payphone service provider, a Completing Carrier may provide a single, blanket sworn statement addressed to all payphone service providers to which compensation is tendered for that quarter and may notify the payphone service providers of the sworn statement through any electronic method, including transmitting the sworn statement with the § 64.1310(a)(4) quarterly report, or posting the sworn statement on the Completing Carrier or clearinghouse website. If a Completing Carrier chooses to post the sworn statement on its website, the Completing Carrier shall state in its § 64.1310(a)(4) quarterly report the web address of the sworn statement.

(4) At the conclusion of each quarter, the Completing Carrier shall submit to

the payphone service provider, in computer readable format, a report on that quarter that includes:

(i) A list of the toll-free and access numbers dialed and completed by the Completing Carrier from each of that payphone service provider's payphones and the ANI for each payphone;

(ii) The volume of calls for each number identified in paragraph (a)(4)(i) of this section that were completed by the Completing Carrier;

(iii) The name, address, and phone number of the person or persons responsible for handling the Completing Carrier's payphone compensation; and

(iv) The carrier identification code (''CIC'') of all facilities-based long distance carriers that routed calls to the Completing Carrier, categorized according to the list of toll-free and access code numbers identified in paragraph (a)(4)(i) of this section.

(b) For purposes of this subpart, an Intermediate Carrier is a facilities-based long distance carrier that switches payphone calls to other facilities-based long distance carriers.

(c) Unless the payphone service provider agrees to other reporting arrangements, each Intermediate Carrier shall provide the payphone service provider with quarterly reports, in computer readable format, that include:

(1) A list of all the facilities-based long distance carriers to which the Intermediate Carrier switched toll-free and access code calls dialed from each of that payphone service provider's payphones;

(2) For each facilities-based long distance carrier identified in paragraph (c)(1) of this section, a list of the toll-free and access code numbers dialed from each of that payphone service provider's payphones that all local exchange carriers have delivered to the Intermediate Carrier and that the Intermediate Carrier switched to the identified facilities-based long distance carrier;

(3) The volume of calls for each number identified in paragraph (c)(2) of this section that the Intermediate Carrier has received from each of that payphone service provider's payphones, identified by their ANIs, and switched to each facilities-based long distance carrier identified in paragraph (c)(1) of this section; and

(4) The name, address and telephone number and other identifying information of the person or persons for each facilities-based long distance carrier identified in paragraph (c)(1) of this section who serves as the Intermediate Carrier's contact at each identified facilities-based long distance carrier.

(d) Local Exchange Carriers must provide to carriers required to pay compensation pursuant to § 64.1300(a) a list of payphone numbers in their service areas. The list must be provided on a quarterly basis. Local Exchange Carriers must verify disputed numbers in a timely manner, and must maintain verification data for 18 months after close of the compensation period.

(e) Local Exchange Carriers must respond to all carrier requests for payphone number verification in connection with the compensation requirements herein, even if such verification is a negative response.

(f) A payphone service provider that seeks compensation for payphones that are not included on the Local Exchange Carrier's list satisfies its obligation to provide alternative reasonable verification to a payor carrier if it provides to that carrier:

(1) A notarized affidavit attesting that each of the payphones for which the payphone service provider seeks compensation is a payphone that was in working order as of the last day of the compensation period; and

(2) Corroborating evidence that each such payphone is owned by the payphone service provider seeking compensation and was in working order on the last day of the compensation period. Corroborating evidence shall include, at a minimum, the telephone bill for the last month of the billing quarter indicating use of a line screening service.

(g) Each Completing Carrier and each Intermediate Carrier must maintain verification data to support the quarterly reports submitted pursuant to paragraphs (a)(4) and (c) of this section for 27 months after the close of that quarter. This data must include the time and date that each call identified

in paragraphs (a)(4) and (c) of this section was made. This data must be provided to the payphone service provider upon request.

[68 FR 62755, Nov. 6, 2003, as amended at 70 FR 722, Jan. 5, 2005]

§ 64.1320 Payphone call tracking system audits.

(a) Unless it has entered into an alternative compensation arrangement pursuant to § 64.1310(a) that relieves it of its § 64.1310(a)(1) tracking system obligation, each Completing Carrier must undergo an audit of its § 64.1310(a)(1) tracking system by an independent third party auditor whose responsibility shall be, using audit methods approved by the American Institute for Certified Public Accountants, to determine whether the call tracking system accurately tracks payphone calls to completion.

(b) By the effective date of these rules, each Completing Carrier in paragraph (a) of this section must file an audit report from the auditor (the ''System Audit Report'') regarding the Completing Carrier's compliance with § 64.1310(a)(1) as of the date of the audit:

(1) With the Commission's Secretary in CC Docket No. 96–128;

(2) With each payphone service provider for which it completes calls and a Completing Carrier may comply with this paragraph's requirement to file copies of the System Audit Report with each payphone service provider by posting the System Audit Report on its website or a clearinghouse website; and

(3) With each facilities-based long distance carrier from which it receives payphone calls.

(c) The Completing Carrier must comply with, and the third-party auditor must verify, the Completing Carrier's compliance with the following factors in establishing a call tracking system pursuant to § 64.1310(a)(1):

(1) Whether the Completing Carrier's procedures accurately track calls to completion;

(2) Whether the Completing Carrier has a person or persons responsible for tracking, compensating, and resolving disputes concerning payphone completed calls;

(3) Whether the Completing Carrier has effective data monitoring procedures;

(4) Whether the Completing Carrier adheres to established protocols to ensure that any software, personnel or any other network changes do not adversely affect its payphone call tracking ability;

(5) Whether the Completing Carrier has created a compensable payphone call file by matching call detail records against payphone identifiers;

(6) Whether the Completing Carrier has procedures to incorporate call data into required reports;

(7) Whether the Completing Carrier has implemented procedures and controls needed to resolve payphone compensation disputes;

(8) Whether the independent third-party auditor can test all critical controls and procedures to verify that errors are insubstantial; and

(9) Whether the Completing Carriers has in place adequate and effective business rules for implementing and paying payphone compensation, including rules used to:

(i) Identify calls originated from payphones;

(ii) Identify compensable payphone calls;

(iii) Identify incomplete or otherwise noncompensable calls; and

(iv) Determine the identities of the payphone service providers to which the Completing Carrier owes compensation.

(d) Consistent with standards established by the American Institute of Certified Public Accountants for attestation engagements, the System Audit Report shall consist of:

(1) The Completing Carrier's representation concerning its compliance; and

(2) The independent auditor's opinion concerning the Completing Carrier's representation of compliance. The Completing Carrier's representation must disclose

(i) Its criteria for identifying calls originating from payphones;

(ii) Its criteria for identifying compensable payphone calls;

(iii) Its criteria for identifying incomplete or otherwise noncompensable calls;

(iv) Its criteria used to determine the identities of the payphone service providers to which the completing carrier owes compensation;

(v) The identity of any clearinghouses the Completing Carrier uses; and

(vi) The types of information that the Completing Carrier needs from the payphone service providers in order to compensate them.

(e) At the time of filing of a System Audit Report with the Commission, the Completing Carrier shall file with the Commission's Secretary, the payphone service providers and the facilities-based long distance carriers identified in paragraph (b) of this section, a statement that includes the name of the Completing Carrier, and the name, address and phone number for the person or persons responsible for handling the Completing Carrier's payphone compensation and for resolving disputes with payphone service providers over compensation, and this statement shall be updated within 60 days of any changes of such persons. If a Completing Carrier chooses to notify payphone service providers of this statement and its System Audit Report by posting these two documents on its website or a clearinghouse website, then this statement shall include the web address for these two documents.

(f) One year after the filing of the System Audit Report, and annually thereafter, the Completing Carrier shall engage an independent third-party auditor to:

(1) Verify that no material changes have occurred concerning the Completing Carrier's compliance with the criteria of the prior year's System Audit Report; or

(2) If a material change has occurred concerning the Completing Carrier's compliance with the prior year's System Audit Report, verify that the material changes do not affect compliance with the audit criteria set forth in paragraph (c) of this section. The Completing Carrier must fully disclose any material changes concerning its call tracking system in its representation to the auditor. The Completing Carrier shall file and provide copies of all System Audit Reports pursuant to the procedures set forth in paragraph (b) of this section.

(g) Subject to protections safeguarding the auditor's and the Completing Carrier's confidential and proprietary information, the Completing Carrier shall provide, upon request, to the payphone service provider for inspection any documents, including working papers, underlying the System Audit Report.

[68 FR 62756, Nov. 6, 2003, as amended at 70 FR 723, Jan. 5, 2005]

§ 64.1330 State review of payphone entry and exit regulations and public interest payphones.

(a) Each state must review and remove any of its regulations applicable to payphones and payphone service providers that impose market entry or exit requirements.

(b) Each state must ensure that access to dialtone, emergency calls, and telecommunications relay service calls for the hearing disabled is available from all payphones at no charge to the caller.

(c) Each state must review its rules and policies to determine whether it has provided for public interest payphones consistent with applicable Commission guidelines, evaluate whether it needs to take measures to ensure that such payphones will continue to exist in light of the Commission's implementation of Section 276 of the Communications Act, and administer and fund such programs so that such payphones are supported fairly and equitably.

[61 FR 52323, Oct. 7, 1996, as amended at 71 FR 65751, Nov. 9, 2006]

§ 64.1340 Right to negotiate.

Unless prohibited by Commission order, payphone service providers have the right to negotiate with the location provider on the location provider's selecting and contracting with, and, subject to the terms of any agreement with the location provider, to select and contract with, the carriers that carry interLATA and intraLATA calls from their payphones.

[61 FR 52323, Oct. 7, 1996]

Subpart N—Expanded Interconnection

§64.1401 Expanded interconnection.

(a) Every local exchange carrier that is classified as a Class A company under §32.11 of this chapter and that is not a National Exchange Carrier Association interstate tariff participant, as provided in part 69, subpart G of this chapter, shall offer expanded interconnection for interstate special access services at their central offices that are classified as end offices or serving wire centers, and at other rating points used for interstate special access.

(b) The local exchange carriers specified in paragraph (a) of this section shall offer expanded interconnection for interstate switched transport services:

(1) In their central offices that are classified as end offices or serving wire centers, as well as at all tandem offices housed in buildings containing such carriers' end offices or serving wire centers for which interstate switched transport expanded interconnection has been tariffed;

(2) Upon *bona fide* request, in tandem offices housed in buildings not containing such carriers' end offices or serving wire centers, or in buildings containing the carriers' end offices or serving wire centers for which interstate switched transport expanded interconnection has not been tariffed; and

(3) Upon *bona fide* request, at remote nodes/switches that serve as rating points for interstate switched transport and that are capable of routing outgoing interexchange access traffic to interconnectors and in which interconnectors can route terminating traffic to such carriers. No such carrier is required to enhance remote nodes/switches or to build additional space to accommodate interstate switched transport expanded interconnection at these locations.

(c) The local exchange carriers specified in paragraph (a) of this section shall offer expanded interconnection for interstate special access and switched transport services through virtual collocation, except that they may offer physical collocation, instead of virtual collocation, in specific central offices, as a service subject to nonstreamlined communications common carrier regulation under Title II of the Communications Act (47 U.S.C. 201–228).

(d) For the purposes of this subpart, physical collocation means an offering that enables interconnectors:

(1) To place their own equipment needed to terminate basic transmission facilities, including optical terminating equipment and multiplexers, within or upon the local exchange carrier's central office buildings;

(2) To use such equipment to connect interconnectors' fiber optic systems or microwave radio transmission facilities (where reasonably feasible) with the local exchange carrier's equipment and facilities used to provide interstate special access services;

(3) To enter the local exchange carrier's central office buildings, subject to reasonable terms and conditions, to install, maintain, and repair the equipment described in paragraph (d)(1) of this section; and

(4) To obtain reasonable amounts of space in central offices for the equipment described in paragraph (d)(1) of this section, allocated on a first-come, first-served basis.

(e) For purposes of this subpart, virtual collocation means an offering that enables interconnectors:

(1) To designate or specify equipment needed to terminate basic transmission facilities, including optical terminating equipment and multiplexers, to be located within or upon the local exchange carrier's buildings, and dedicated to such interconnectors' use,

(2) To use such equipment to connect interconnectors' fiber optic systems or microwave radio transmission facilities (where reasonably feasible) with the local exchange carrier's equipment and facilities used to provide interstate special and switched access services, and

(3) To monitor and control their communications channels terminating in such equipment.

(f) Under both physical collocation offering and virtual collocation offerings for expanded interconnection of fiber optic facilities, local exchange carriers shall provide:

(1) An interconnection point or points at which the fiber optic cable carrying an interconnectors' circuits can enter each local exchange carrier location, provided that the local exchange carrier shall designate interconnection points as close as reasonably possible to each location; and

(2) At least two such interconnection points at any local exchange carrier location at which there are at least two entry points for the local exchange carrier's cable facilities, and space is available for new facilities in at least two of those entry points.

(g) The local exchange carriers specified in paragraph (a) of this section shall offer signalling for tandem switching, as defined in § 69.2(vv) of this chapter, at central offices that are classified as equal office end offices or serving wire centers, or at signal transfer points if such information is offered via common channel signalling.

[57 FR 54331, Nov. 18, 1992, as amended at 58 FR 48762, Sept. 17, 1993; 59 FR 32930, June 27, 1994; 59 FR 38930, Aug. 1, 1994]

§ 64.1402 Rights and responsibilities of interconnectors.

(a) For the purposes of this subpart, an interconnector means a party taking expanded interconnection offerings. Any party shall be eligible to be an interconnector.

(b) Interconnectors shall have the right, under expanded interconnection, to interconnect their fiber optic systems and, where reasonably feasible, their microwave transmission facilities.

(c) Interconnectors shall not be allowed to use interstate special access expanded interconnection offerings to connect their transmission facilities with the local exchange carrier's interstate switched services until that local exchange carrier's tariffs implementing expanded interconnection for switched transport have become effective.

[57 FR 54331, Nov. 18, 1992, as amended at 61 FR 43160, Aug. 21, 1996]

Subpart O—Interstate Pay-Per-Call and Other Information Services

SOURCE: 58 FR 44773, Aug. 25, 1993, unless otherwise noted.

§ 64.1501 Definitions.

For purposes of this subpart, the following definitions shall apply:

(a) *Pay-per-call service* means any service:

(1) In which any person provides or purports to provide:

(i) Audio information or audio entertainment produced or packaged by such person;

(ii) Access to simultaneous voice conversation services; or

(iii) Any service, including the provision of a product, the charges for which are assessed on the basis of the completion of the call;

(2) For which the caller pays a per-call or per-time-interval charge that is greater than, or in addition to, the charge for transmission of the call; and

(3) Which is accessed through use of a 900 number;

(4) Provided, however, such term does not include directory services provided by a common carrier or its affiliate or by a local exchange carrier or its affiliate, or any service for which users are assessed charges only after entering into a presubscription or comparable arrangement with the provider of such service.

(b) *Presubscription or comparable arrangement* means a contractual agreement in which:

(1) The service provider clearly and conspicuously discloses to the consumer all material terms and conditions associated with the use of the service, including the service provider's name and address, a business telephone number which the consumer may use to obtain additional information or to register a complaint, and the rates for the service;

(2) The service provider agrees to notify the consumer of any future rate changes;

(3) The consumer agrees to use the service on the terms and conditions disclosed by the service provider; and

(4) The service provider requires the use of an identification number or

other means to prevent unauthorized access to the service by nonsubscribers;

(5) Provided, however, that disclosure of a credit, prepaid account, debit, charge, or calling card number, along with authorization to bill that number, made during the course of a call to an information service shall constitute a presubscription or comparable arrangement if an introductory message containing the information specified in § 64.1504(c)(2) is provided prior to, and independent of, assessment of any charges. No other action taken by a consumer during the course of a call to an information service, for which charges are assessed, can create a presubscription or comparable arrangement.

(6) Provided, that a presubscription arrangement to obtain information services provided by means of a toll-free number shall conform to the requirements of § 64.1504(c).

(c) *Calling card* means an identifying number or code unique to the individual, that is issued to the individual by a common carrier and enables the individual to be charged by means of a phone bill for charges incurred independent of where the call originates.

[61 FR 39087, July 26, 1996]

§ 64.1502 Limitations on the provision of pay-per-call services.

Any common carrier assigning a telephone number to a provider of interstate pay-per-call service shall require, by contract or tariff, that such provider comply with the provisions of this subpart and of titles II and III of the Telephone Disclosure and Dispute Resolution Act (Pub. L. No. 102–556) (TDDRA) and the regulations prescribed by the Federal Trade Commission pursuant to those titles.

§ 64.1503 Termination of pay-per-call and other information programs.

(a) Any common carrier assigning a telephone number to a provider of interstate pay-per-call service shall specify by contract or tariff that pay-per-call programs not in compliance with § 64.1502 shall be terminated following written notice to the information provider. The information provider shall be afforded a period of no less than seven and no more than 14 days during which a program may be brought into compliance. Programs not in compliance at the expiration of such period shall be terminated immediately.

(b) Any common carrier providing transmission or billing and collection services to a provider of interstate information service through any 800 telephone number, or other telephone number advertised or widely understood to be toll-free, shall promptly investigate any complaint that such service is not provided in accordance with § 64.1504 or § 64.1510(c), and, if the carrier reasonably determines that the complaint is valid, may terminate the provision of service to an information provider unless the provider supplies evidence of a written agreement that meets the requirements of this § 64.1504(c)(1).

[61 FR 39087, July 26, 1996]

§ 64.1504 Restrictions on the use of toll-free numbers.

A common carrier shall prohibit by tariff or contract the use of any 800 telephone number, or other telephone number advertised or widely understood to be toll-free, in a manner that would result in:

(a) The calling party or the subscriber to the originating line being assessed, by virtue of completing the call, a charge for a call;

(b) The calling party being connected to a pay-per-call service;

(c) The calling party being charged for information conveyed during the call unless:

(1) The calling party has a written agreement (including an agreement transmitted through electronic medium) that specifies the material terms and conditions under which the information is offered and includes:

(i) The rate at which charges are assessed for the information;

(ii) The information provider's name;

(iii) The information provider's business address;

(iv) The information provider's regular business telephone number;

(v) The information provider's agreement to notify the subscriber at least one billing cycle in advance of all future changes in the rates charged for the information;

(vi) The subscriber's choice of payment method, which may be by direct remit, debit, prepaid account, phone bill, or credit or calling card and, if a subscriber elects to pay by means of phone bill, a clear explanation that the subscriber will be assessed for calls made to the information service from the subscriber's phone line;

(vii) A unique personal identification number or other subscriber-specific identifier that must be used to obtain access to the information service and instructions on its use, and, in addition, assures that any charges for services accessed by use of the subscriber's personal identification number or subscriber-specific identifier be assessed to subscriber's source of payment elected pursuant to paragraph (c)(1)(vi) of this section; or

(2) The calling party is charged for the information by means of a credit, prepaid, debit, charge, or calling card and the information service provider includes in response to each call an introductory message that:

(i) Clearly states that there is a charge for the call;

(ii) Clearly states the service's total cost per minute and any other fees for the service or for any service to which the caller may be transferred;

(iii) Explains that the charges must be billed on either a credit, prepaid, debit, charge, or calling card;

(iv) Asks the caller for the card number;

(v) Clearly states that charges for the call begin at the end of the introductory message; and

(vi) Clearly states that the caller can hang up at or before the end of the introductory message without incurring any charge whatsoever.

(d) The calling party being called back collect for the provision of audio or data information services, simultaneous voice conversation services, or products; and

(e) The calling party being assessed by virtue of the caller being asked to connect or otherwise transfer to a pay-per-call service, a charge for the call.

(f) Provided, however, that:

(1) Notwithstanding paragraph (c)(1) of this section, a written agreement that meets the requirements of that paragraph is not required for:

(i) Calls utilizing telecommunications devices for the deaf;

(ii) Directory services provided by a common carrier or its affiliate or by a local exchange carrier or its affiliate; or

(iii) Any purchase of goods or of services that are not information services.

(2) The requirements of paragraph (c)(2) of this section shall not apply to calls from repeat callers using a bypass mechanism to avoid listening to the introductory message: *Provided*, That information providers shall disable such a bypass mechanism after the institution of any price increase for a period of time determined to be sufficient by the Federal Trade Commission to give callers adequate and sufficient notice of a price increase.

[61 FR 39087, July 26, 1996, as amended at 69 FR 61154, Oct. 15, 2004]

§ 64.1505 Restrictions on collect telephone calls.

(a) No common carrier shall provide interstate transmission or billing and collection services to an entity offering any service within the scope of § 64.1501(a)(1) that is billed to a subscriber on a collect basis at a per-call or per-time-interval charge that is greater than, or in addition to, the charge for transmission of the call.

(b) No common carrier shall provide interstate transmission services for any collect information services billed to a subscriber at a tariffed rate unless the called party has taken affirmative action clearly indicating that it accepts the charges for the collect service.

§ 64.1506 Number designation.

Any interstate service described in § 64.1501(a)(1)–(2), and not subject to the exclusions contained in § 64.1501(a)(4), shall be offered only through telephone numbers beginning with a 900 service access code.

[59 FR 46770, Sept. 12, 1994]

§ 64.1507 Prohibition on disconnection or interruption of service for failure to remit pay-per-call and similar service charges.

No common carrier shall disconnect or interrupt in any manner, or order the disconnection or interruption of, a

telephone subscriber's local exchange or long distance telephone service as a result of that subscriber's failure to pay:

(a) Charges for interstate pay-per-call service;

(b) Charges for interstate information services provided pursuant to a presubscription or comparable arrangement; or

(c) Charges for interstate information services provided on a collect basis which have been disputed by the subscriber.

[58 FR 44773, Aug. 25, 1993, as amended at 59 FR 46770, Sept. 12, 1994]

§ 64.1508 Blocking access to 900 service.

(a) Local exchange carriers must offer to their subscribers, where technically feasible, an option to block access to services offered on the 900 service access code. Blocking is to be offered at no charge, on a one-time basis, to:

(1) All telephone subscribers during the period from November 1, 1993 through December 31, 1993; and

(2) Any subscriber who subscribes to a new telephone number for a period of 60 days after the new number is effective.

(b) For blocking requests not within the one-time option or outside the time frames specified in paragraph (a) of this section, and for unblocking requests, local exchange carriers may charge a reasonable one-time fee. Requests by subscribers to remove 900 services blocking must be in writing.

(c) The terms and conditions under which subscribers may obtain 900 services blocking are to be included in tariffs filed with this Commission.

§ 64.1509 Disclosure and dissemination of pay-per-call information.

(a) Any common carrier assigning a telephone number to a provider of interstate pay-per-call services shall make readily available, at no charge, to Federal and State agencies and all other interested persons:

(1) A list of the telephone numbers for each of the pay-per-call services it carries;

(2) A short description of each such service;

(3) A statement of the total cost or the cost per minute and any other fees for each such service; and

(4) A statement of the pay-per-call service provider's name, business address, and business telephone number.

(b) Any common carrier assigning a telephone number to a provider of interstate pay-per-call services and offering billing and collection services to such provider shall:

(1) Establish a local or toll-free telephone number to answer questions and provide information on subscribers' rights and obligations with regard to their use of pay-per-call services and to provide to callers the name and mailing address of any provider of pay-per-call services offered by that carrier; and

(2) Provide to all its telephone subscribers, either directly or through contract with any local exchange carrier providing billing and collection services to that carrier, a disclosure statement setting forth all rights and obligations of the subscriber and the carrier with respect to the use and payment of pay-per-call services. Such statement must include the prohibition against disconnection of basic communications services for failure to pay pay-per-call charges established by § 64.1507, the right of a subscriber to obtain blocking in accordance with § 64.1508, the right of a subscriber not to be billed for pay-per-call services not offered in compliance with federal laws and regulations established by § 64.1510(a)(1), and the possibility that a subscriber's access to 900 services may be involuntarily blocked pursuant to § 64.1512 for failure to pay legitimate pay-per-call charges. Disclosure statements must be forwarded to:

(i) All telephone subscribers no later than 60 days after these regulations take effect;

(ii) All new telephone subscribers no later than 60 days after service is established;

(iii) All telephone subscribers requesting service at a new location no later than 60 days after service is established; and

(iv) Thereafter, to all subscribers at least once per calendar year, at intervals of not less than 6 months nor more than 18 months.

[58 FR 44773, Aug. 25, 1993, as amended at 61 FR 55582, Oct. 28, 1996]

§ 64.1510 Billing and collection of pay-per-call and similar service charges.

(a) Any common carrier assigning a telephone number to a provider of interstate pay-per-call services and offering billing and collection services to such provider shall:

(1) Ensure that a subscriber is not billed for interstate pay-per-call services that such carrier knows or reasonably should know were provided in violation of the regulations set forth in this subpart or prescribed by the Federal Trade Commission pursuant to titles II or III of the TDDRA or any other federal law;

(2) In any billing to telephone subscribers that includes charges for any interstate pay-per-call service:

(i) Include a statement indicating that:

(A) Such charges are for non-communications services;

(B) Neither local nor long distances services can be disconnected for non-payment although an information provider may employ private entities to seek to collect such charges;

(C) 900 number blocking is available upon request; and

(D) Access to pay-per-call services may be involuntarily blocked for failure to pay legitimate charges;

(ii) Display any charges for pay-per-call services in a part of the bill that is identified as not being related to local and long distance telephone charges;

(iii) Specify, for each pay-per-call charge made, the type of service, the amount of the charge, and the date, time, and, for calls billed on a time-sensitive basis, the duration of the call; and

(iv) Identify the local or toll-free number established in accordance with § 64.1509(b)(1).

(b) Any common carrier offering billing and collection services to an entity providing interstate information services on a collect basis shall, to the extent possible, display the billing information in the manner described in paragraphs (a)(2)(i), (A), (B), (D) and (a)(2)(ii) of this section.

(c) If a subscriber elects, pursuant to § 64.1504(c)(1)(vi), to pay by means of a phone bill for any information service provided by through any 800 telephone number, or other telephone number advertised or widely understood to be toll-free, the phone bill shall:

(1) Include, in prominent type, the following disclaimer: ''Common carriers may not disconnect local or long distance telephone service for failure to pay disputed charges for information services;'' and

(2) Clearly list the 800 or other toll-free number dialed.

[58 FR 44773, Aug. 25, 1993, as amended at 59 FR 46771, Sept. 12, 1994; 61 FR 39088, July 26, 1996]

§ 64.1511 Forgiveness of charges and refunds.

(a) Any carrier assigning a telephone number to a provider of interstate pay-per-call services or providing transmission for interstate information services provided pursuant to a presubscription or comparable arrangement or on a collect basis, and providing billing and collection for such services, shall establish procedures for the handling of subscriber complaints regarding charges for those services. A billing carrier is afforded discretion to set standards for determining when a subscriber's complaint warrants forgiveness, refund or credit of interstate pay-per-call or information services charges provided that such charges must be forgiven, refunded, or credited when a subscriber has complained about such charges and either this Commission, the Federal Trade Commission, or a court of competent jurisdiction has found or the carrier has determined, upon investigation, that the service has been offered in violation of federal law or the regulations that are either set forth in this subpart or prescribed by the Federal Trade Commission pursuant to titles II or III of the TDDRA. Carriers shall observe the record retention requirements set forth in § 42.6 of this chapter except that relevant records shall be retained by carriers beyond the requirements of part 42 of this chapter when a complaint is

pending at the time the specified retention period expires.

(b) Any carrier assigning a telephone number to a provider of interstate pay-per-call services but not providing billing and collection services for such services, shall, by tariff or contract, require that the provider and/or its billing and collection agents have in place procedures whereby, upon complaint, pay-per-call charges may be forgiven, refunded, or credited, provided that such charges must be forgiven, refunded, or credited when a subscriber has complained about such charges and either this Commission, the Federal Trade Commission, or a court of competent jurisdiction has found or the carrier has determined, upon investigation, that the service has been offered in violation of federal law or the regulations that are either set forth in this subpart or prescribed by the Federal Trade Commission pursuant to titles II or III of the TDDRA.

[58 FR 44773, Aug. 25, 1993, as amended at 59 FR 46771, Sept. 12, 1994]

§ 64.1512 Involuntary blocking of pay-per-call services.

Nothing in this subpart shall preclude a common carrier or information provider from blocking or ordering the blocking of its interstate pay-per-call programs from numbers assigned to subscribers who have incurred, but not paid, legitimate pay-per-call charges, except that a subscriber who has filed a complaint regarding a particular pay-per-call program pursuant to procedures established by the Federal Trade Commission under title III of the TDDRA shall not be involuntarily blocked from access to that program while such a complaint is pending. This restriction is not intended to preclude involuntary blocking when a carrier or IP has decided in one instance to sustain charges against a subscriber but that subscriber files additional separate complaints.

§ 64.1513 Verification of charitable status.

Any common carrier assigning a telephone number to a provider of interstate pay-per-call services that the carrier knows or reasonably should know is engaged in soliciting charitable contributions shall obtain verification that the entity or individual for whom contributions are solicited has been granted tax exempt status by the Internal Revenue Service.

§ 64.1514 Generation of signalling tones.

No common carrier shall assign a telephone number for any pay-per-call service that employs broadcast advertising which generates the audible tones necessary to complete a call to a pay-per-call service.

§ 64.1515 Recovery of costs.

No common carrier shall recover its cost of complying with the provisions of this subpart from local or long distance ratepayers.

Subpart P—Calling Party Telephone Number; Privacy

SOURCE: 59 FR 18319, Apr. 18, 1994, unless otherwise noted.

§ 64.1600 Definitions.

(a) *Aggregate information.* The term ''aggregate information'' means collective data that relate to a group or category of services or customers, from which individual customer identities or characteristics have been removed.

(b) *ANI.* The term ''ANI'' (automatic number identification) refers to the delivery of the calling party's billing number by a local exchange carrier to any interconnecting carrier for billing or routing purposes, and to the subsequent delivery of such number to end users.

(c) *Caller identification information.* The term ''caller identification information'' means information provided by a caller identification service regarding the telephone number of, or other information regarding the origination of, a call made using a telecommunications service or interconnected VoIP service.

(d) *Caller identification service.* The term ''caller identification service'' means any service or device designed to provide the user of the service or device with the telephone number of, or

other information regarding the origination of, a call made using a telecommunications service or interconnected VoIP service.

(e) *Calling party number*. The term ''Calling Party Number'' refers to the subscriber line number or the directory number contained in the calling party number parameter of the call set-up message associated with an interstate call on a Signaling System 7 network.

(f) *Intermediate Provider*. The term *Intermediate Provider* means any entity that carries or processes traffic that traverses or will traverse the PSTN at any point insofar as that entity neither originates nor terminates that traffic.

(g) *Charge number*. The term ''charge number'' refers to the delivery of the calling party's billing number in a Signaling System 7 environment by a local exchange carrier to any interconnecting carrier for billing or routing purposes, and to the subsequent delivery of such number to end users.

(h) *Information regarding the origination*. The term ''information regarding the origination'' means any:

(1) Telephone number;

(2) Portion of a telephone number, such as an area code;

(3) Name;

(4) Location information;

(5) Billing number information, including charge number, ANI, or pseudo-ANI; or

(6) Other information regarding the source or apparent source of a telephone call.

(i) *Interconnected VoIP service*. The term ''interconnected VoIP service'' has the same meaning given the term ''interconnected VoIP service'' in 47 CFR 9.3 as it currently exists or may hereafter be amended.

(j) *Privacy indicator*. The term ''Privacy Indicator'' refers to information, contained in the calling party number parameter of the call set-up message associated with an interstate call on an Signaling System 7 network, that indicates whether the calling party authorizes presentation of the calling party number to the called party.

(k) *Signaling System 7*. The term ''Signaling System 7'' (SS7) refers to a carrier to carrier out-of-band signaling network used for call routing, billing and management.

[60 FR 29490, June 5, 1995, as amended at 76 FR 43205, July 20, 2011; 76 FR 73882, Nov. 29, 2011]

§ 64.1601 Delivery requirements and privacy restrictions.

(a) *Delivery*. Except as provided in paragraphs (d) and (e) of this section:

(1) Telecommunications carriers and providers of interconnected Voice over Internet Protocol (VoIP) services, in originating interstate or intrastate traffic on the public switched telephone network (PSTN) or originating interstate or intrastate traffic that is destined for the PSTN (collectively ''PSTN Traffic''), are required to transmit for all PSTN Traffic the telephone number received from or assigned to or otherwise associated with the calling party to the next provider in the path from the originating provider to the terminating provider. This provision applies regardless of the voice call signaling and transmission technology used by the carrier or VoIP provider. Entities subject to this provision that use Signaling System 7 (SS7) are required to transmit the calling party number (CPN) associated with all PSTN Traffic in the SS7 ISUP (ISDN User Part) CPN field to interconnecting providers, and are required to transmit the calling party's charge number (CN) in the SS7 ISUP CN field to interconnecting providers for any PSTN Traffic where CN differs from CPN. Entities subject to this provision who use multi-frequency (MF) signaling are required to transmit CPN, or CN if it differs from CPN, associated with all PSTN Traffic in the MF signaling automatic numbering information (ANI) field.

(2) Intermediate providers within an interstate or intrastate call path that originates and/or terminates on the PSTN must pass unaltered to subsequent providers in the call path signaling information identifying the telephone number, or billing number, if different, of the calling party that is received with a call. This requirement applies to SS7 information including but not limited to CPN and CN, and

also applies to MF signaling information or other signaling information intermediate providers receive with a call. This requirement also applies to VoIP signaling messages, such as calling party and charge information identifiers contained in Session Initiation Protocol (SIP) header fields, and to equivalent identifying information as used in other VoIP signaling technologies, regardless of the voice call signaling and transmission technology used by the carrier or VoIP provider.

(b) *Privacy*. Except as provided in paragraph (d) of this section, originating carriers using Signaling System 7 and offering or subscribing to any service based on Signaling System 7 functionality will recognize *67 dialed as the first three digits of a call (or 1167 for rotary or pulse dialing phones) as a caller's request that the CPN not be passed on an interstate call. Such carriers providing line blocking services will recognize *82 as a caller's request that the CPN be passed on an interstate call. No common carrier subscribing to or offering any service that delivers CPN may override the privacy indicator associated with an interstate call. Carriers must arrange their CPN-based services, and billing practices, in such a manner that when a caller requests that the CPN not be passed, a carrier may not reveal that caller's number or name, nor may the carrier use the number or name to allow the called party to contact the calling party. The terminating carrier must act in accordance with the privacy indicator unless the call is made to a called party that subscribes to an ANI or charge number based service and the call is paid for by the called party.

(c) *Charges*. No common carrier subscribing to or offering any service that delivers calling party number may

(1) Impose on the calling party charges associated with per call blocking of the calling party's telephone number, or

(2) Impose charges upon connecting carriers for the delivery of the calling party number parameter or its associated privacy indicator.

(d) *Exemptions*. Section 64.1601(a) and (b) shall not apply when:

(1) A call originates from a payphone.

(2) A local exchange carrier with Signaling System 7 capability does not have the software to provide *67 or *82 functionalities. Such carriers are prohibited from passing CPN.

(3) A Private Branch Exchange or Centrex system does not pass end user CPN. Centrex systems that rely on *6 or *8 for a function other than CPN blocking or unblocking, respectively, are also exempt if they employ alternative means of blocking or unblocking.

(4) CPN delivery—

(i) Is used solely in connection with calls within the same limited system, including (but not limited to) a Centrex system, virtual private network, or Private Branch Exchange;

(ii) Is used on a public agency's emergency telephone line or in conjunction with 911 emergency services, or on any entity's emergency assistance poison control telephone line; or

(iii) Is provided in connection with legally authorized call tracing or trapping procedures specifically requested by a law enforcement agency.

(e) Any person or entity that engages in telemarketing, as defined in section 64.1200(f)(10) must transmit caller identification information.

(1) For purposes of this paragraph, caller identification information must include either CPN or ANI, and, when available by the telemarketer's carrier, the name of the telemarketer. It shall not be a violation of this paragraph to substitute (for the name and phone number used in, or billed for, making the call) the name of the seller on behalf of which the telemarketing call is placed and the seller's customer service telephone number. The telephone number so provided must permit any individual to make a do-not-call request during regular business hours.

(2) Any person or entity that engages in telemarketing is prohibited from blocking the transmission of caller identification information.

(3) Tax-exempt nonprofit organizations are not required to comply with this paragraph.

[60 FR 29490, June 5, 1995; 60 FR 54449, Oct. 24, 1995, as amended at 62 FR 34015, June 24, 1997; 68 FR 44179, July 25, 2003; 71 FR 75122, Dec. 14, 2006; 76 FR 73882, Nov. 29, 2011]

§ 64.1602 Restrictions on use and sale of telephone subscriber information provided pursuant to automatic number identification or charge number services.

(a) Any common carrier providing Automatic Number Identification or charge number services on interstate calls to any person shall provide such services under a contract or tariff containing telephone subscriber information requirements that comply with this subpart. Such requirements shall:

(1) Permit such person to use the telephone number and billing information for billing and collection, routing, screening, and completion of the originating telephone subscriber's call or transaction, or for services directly related to the originating telephone subscriber's call or transaction;

(2) Prohibit such person from reusing or selling the telephone number or billing information without first

(i) Notifying the originating telephone subscriber and,

(ii) Obtaining the affirmative consent of such subscriber for such reuse or sale; and,

(3) Prohibit such person from disclosing, except as permitted by paragraphs (a) (1) and (2) of this section, any information derived from the automatic number identification or charge number service for any purpose other than

(i) Performing the services or transactions that are the subject of the originating telephone subscriber's call,

(ii) Ensuring network performance security, and the effectiveness of call delivery,

(iii) Compiling, using, and disclosing aggregate information, and

(iv) Complying with applicable law or legal process.

(b) The requirements imposed under paragraph (a) of the section shall not prevent a person to whom automatic number identification or charge number services are provided from using

(1) The telephone number and billing information provided pursuant to such service, and

(2) Any information derived from the automatic number identification or charge number service, or from the analysis of the characteristics of a telecommunications transmission, to offer a product or service that is directly related to the products or services previously acquired by that customer from such person. Use of such information is subject to the requirements of 47 CFR 64.1200 and 64.1504(c).

[60 FR 29490, June 5, 1995]

§ 64.1603 Customer notification.

Any common carrier participating in the offering of services providing calling party number, ANI, or charge number on interstate calls must notify its subscribers, individually or in conjunction with other carriers, that their telephone numbers may be identified to a called party. Such notification must be made not later than December 1, 1995, and at such times thereafter as to ensure notice to subscribers. The notification must be effective in informing subscribers how to maintain privacy by dialing *67 (or 1167 for rotary or pulse-dialing phones) on interstate calls. The notice shall inform subscribers whether dialing *82 (or 1182 for rotary or pulse-dialing phones) on interstate calls is necessary to present calling party number to called parties. For ANI or charge number services for which such privacy is not provided, the notification shall inform subscribers of the restrictions on the reuse or sale of subscriber information.

[60 FR 29491, June 5, 1995; 60 FR 54449, Oct. 24, 1995]

§ 64.1604 Prohibition on transmission of inaccurate or misleading caller identification information.

(a) No person or entity in the United States shall, with the intent to defraud, cause harm, or wrongfully obtain anything of value, knowingly cause, directly or indirectly, any caller identification service to transmit or display misleading or inaccurate caller identification information.

(b) *Exemptions.* Paragraph (a) of this section shall not apply to:

(1) Lawfully authorized investigative, protective, or intelligence activity of a law enforcement agency of the United States, a State, or a political subdivision of a State, or of an intelligence agency of the United States; or

(2) Activity engaged in pursuant to a court order that specifically authorizes

the use of caller identification manipulation.

(c) A person or entity that blocks or seeks to block a caller identification service from transmitting or displaying that person or entity's own caller identification information pursuant to § 64.1601(b) of this part shall not be liable for violating the prohibition in paragraph (a) of this section. This paragraph (c) does not relieve any person or entity that engages in telemarketing, as defined in § 64.1200(f)(10) of this part, of the obligation to transmit caller identification information under § 64.1601(e).

[76 FR 43205, July 20, 2011]

§ 64.1605 Effective date.

The provisions of §§ 64.1600 and 64.1602 are effective April 12, 1995. The provisions of §§ 64.1601 and 64.1603 are effective December 1, 1995, except §§ 64.1601 and 64.1603 do not apply to public payphones and partylines until January 1, 1997.

[60 FR 29491, June 5, 1995; 60 FR 54449, Oct. 24, 1995. Redesignated at 76 FR 43205, July 20, 2011]

Subpart Q—Implementation of Section 273(d)(5) of the Communications Act: Dispute Resolution Regarding Equipment Standards

SOURCE: 61 FR 24903, May 17, 1996, unless otherwise noted.

§ 64.1700 Purpose and scope.

The purpose of this subpart is to implement the Telecommunications Act of 1996 which amended the Communications Act by creating section 273(d)(5), 47 U.S.C. 273(d)(5). Section 273(d) sets forth procedures to be followed by non-accredited standards development organizations when these organizations set industry-wide standards and generic requirements for telecommunications equipment or customer premises equipment. The statutory procedures allow outside parties to fund and participate in setting the organization's standards and require the organization and the parties to develop a process for resolving any technical disputes. In cases where all parties cannot agree to a mutually satisfactory dispute resolution process, section 273(d)(5) requires the Commission to prescribe a dispute resolution process.

§ 64.1701 Definitions.

For purposes of this subpart, the terms *accredited standards development organization*, *funding party*, *generic requirement*, and *industry-wide* have the same meaning as found in 47 U.S.C. 273.

§ 64.1702 Procedures.

If a non-accredited standards development organization (NASDO) and the funding parties are unable to agree unanimously on a dispute resolution process prior to publishing a text for comment pursuant to 47 U.S.C. 273(d)(4)(A)(v), a funding party may use the default dispute resolution process set forth in section 64.1703.

§ 64.1703 Dispute resolution default process.

(a) *Tri-Partite Panel*. Technical disputes governed by this section shall be resolved in accordance with the recommendation of a three-person panel, subject to a vote of the funding parties in accordance with paragraph (b) of this section. Persons who participated in the generic requirements or standards development process are eligible to serve on the panel. The panel shall be selected and operate as follows:

(1) Within two (2) days of the filing of a dispute with the NASDO invoking the dispute resolution default process, both the funding party seeking dispute resolution and the NASDO shall select a representative to sit on the panel;

(2) Within four (4) days of their selection, the two panelists shall select a neutral third panel member to create a tri-partite panel;

(3) The tri-partite panel shall, at a minimum, review the proposed text of the NASDO and any explanatory material provided to the funding parties by the NASDO, the comments and any alternative text provided by the funding party seeking dispute resolution, any relevant standards which have been established or which are under development by an accredited-standards development organization, and any comments submitted by other funding parties;

(4) Any party in interest submitting information to the panel for consideration (including the NASDO, the party seeking dispute resolution and the other funding parties) shall be asked by the panel whether there is knowledge of patents, the use of which may be essential to the standard or generic requirement being considered. The fact that the question was asked along with any affirmative responses shall be recorded, and considered, in the panel's recommendation; and

(5) The tri-partite panel shall, within fifteen (15) days after being established, decide by a majority vote, the issue or issues raised by the party seeking dispute resolution and produce a report of their decision to the funding parties. The tri-partite panel must adopt one of the five options listed below:

(i) The NASDO's proposal on the issue under consideration;

(ii) The position of the party seeking dispute resolution on the issue under consideration;

(iii) A standard developed by an accredited standards development organization that addresses the issue under consideration;

(iv) A finding that the issue is not ripe for decision due to insufficient technical evidence to support the soundness of any one proposal over any other proposal; or

(v) Any other resolution that is consistent with the standard described in section 64.1703(a)(6).

(6) The tri-partite panel must choose, from the five options outlined above, the option that they believe provides the most technically sound solution and base its recommendation upon the substantive evidence presented to the panel. The panel is not precluded from taking into account complexity of implementation and other practical considerations in deciding which option is most technically sound. Neither of the disputants (i.e., the NASDO and the funding party which invokes the dispute resolution process) will be permitted to participate in any decision to reject the mediation panel's recommendation.

(b) The tri-partite panel's recommendation(s) must be included in the final industry-wide standard or industry-wide generic requirement, unless three-fourths of the funding parties who vote decide within thirty (30) days of the filing of the dispute to reject the recommendation and accept one of the options specified in paragraphs (a)(5) (i) through (v) of this section. Each funding party shall have one vote.

(c) All costs sustained by the tri-partite panel will be incorporated into the cost of producing the industry-wide standard or industry-wide generic requirement.

§ 64.1704 Frivolous disputes/penalties.

(a) No person shall willfully refer a dispute to the dispute resolution process under this subpart unless to the best of his knowledge, information and belief there is good ground to support the dispute and the dispute is not interposed for delay.

(b) Any person who fails to comply with the requirements in paragraph (a) of this section, may be subject to forfeiture pursuant to section 503(b) of the Communications Act, 47 U.S.C. 503(b).

Subpart R—Geographic Rate Averaging and Rate Integration

AUTHORITY: 47 U.S.C. §§151, 154(i), 201–205, 214(e), 215 and 254(g).

§ 64.1801 Geographic rate averaging and rate integration.

(a) The rates charged by providers of interexchange telecommunications services to subscribers in rural and high-cost areas shall be no higher than the rates charged by each such provider to its subscribers in urban areas.

(b) A provider of interstate interexchange telecommunications services shall provide such services to its subscribers in each U.S. state at rates no higher than the rates charged to its subscribers in any other state.

[61 FR 42564, Aug. 16, 1996]

Subpart S—Nondominant Interexchange Carrier Certifications Regarding Geographic Rate Averaging and Rate Integration Requirements

§ 64.1900 Nondominant interexchange carrier certifications regarding geographic rate averaging and rate integration requirements.

(a) A nondominant provider of interexchange telecommunications services, which provides detariffed interstate, domestic, interexchange services, shall file with the Commission, on an annual basis, a certification that it is providing such services in compliance with its geographic rate averaging and rate integration obligations pursuant to section 254(g) of the Communications Act of 1934, as amended.

(b) The certification filed pursuant to paragraph (a) of this section shall be signed by an officer of the company under oath.

[61 FR 59366, Nov. 22, 1996]

Subpart T—Separate Affiliate Requirements for Incumbent Independent Local Exchange Carriers That Provide In-Region, Interstate Domestic Interexchange Services or In-Region International Interexchange Services

SOURCE: 62 FR 36017, July 3, 1997, unless otherwise noted.

§ 64.1901 Basis and purpose.

(a) *Basis*. These rules are issued pursuant to the Communications Act of 1934, as amended.

(b) *Purpose*. The purpose of these rules is to regulate the provision of in-region, interstate, domestic, interexchange services and in-region international interexchange services by incumbent independent local exchange carriers.

§ 64.1902 Terms and definitions.

Terms used in this part have the following meanings:

Books of account. Books of account refer to the financial accounting system a company uses to record, in monetary terms, the basic transactions of a company. These books of account reflect the company's assets, liabilities, and equity, and the revenues and expenses from operations. Each company has its own separate books of account.

Incumbent Independent Local Exchange Carrier (Incumbent Independent LEC). The term incumbent independent local exchange carrier means, with respect to an area, the independent local exchange carrier that:

(1) On February 8, 1996, provided telephone exchange service in such area; and

(2)(i) On February 8, 1996, was deemed to be a member of the exchange carrier association pursuant to § 69.601(b) of this title; or

(ii) Is a person or entity that, on or after February 8, 1996, became a successor or assign of a member described in paragraph (2)(i) of this section. The Commission may also, by rule, treat an independent local exchange carrier as an incumbent independent local exchange carrier pursuant to section 251(h)(2) of the Communications Act of 1934, as amended.

Independent Local Exchange Carrier (Independent LEC). Independent local exchange carriers are local exchange carriers, including GTE, other than the BOCs.

Independent Local Exchange Carrier Affiliate (Independent LEC Affiliate). An independent local exchange carrier affiliate is a carrier that is owned (in whole or in part) or controlled by, or under common ownership (in whole or in part) or control with, an independent local exchange carrier.

In-region service. In-region service means telecommunications service originating in an independent local exchange carrier's local service areas or 800 service, private line service, or their equivalents that:

(1) Terminate in the independent LEC's local exchange areas; and

(2) Allow the called party to determine the interexchange carrier, even if the service originates outside the independent LEC's local exchange areas.

Local Exchange Carrier. The term local exchange carrier means any person that is engaged in the provision of

telephone exchange service or exchange access. Such term does not include a person insofar as such person is engaged in the provision of a commercial mobile service under section 332(c), except to the extent that the Commission finds that such service should be included in the definition of that term.

[64 FR 44425, Aug. 16, 1999]

§ 64.1903 Obligations of all incumbent independent local exchange carriers.

(a) An incumbent independent LEC providing in-region, interstate, interexchange services or in-region international interexchange services shall provide such services through an affiliate that satisfies the following requirements:

(1) The affiliate shall maintain separate books of account from its affiliated exchange companies. Nothing in this section requires the affiliate to maintain separate books of account that comply with part 32 of this title;

(2) The affiliate shall not jointly own transmission or switching facilities with its affiliated exchange companies. Nothing in this section prohibits an affiliate from sharing personnel or other resources or assets with an affiliated exchange company; and

(3) The affiliate shall acquire any services from its affiliated exchange companies for which the affiliated exchange companies are required to file a tariff at tariffed rates, terms, and conditions. Nothing in this section shall prohibit the affiliate from acquiring any unbundled network elements or exchange services for the provision of a telecommunications service from its affiliated exchange companies, subject to the same terms and conditions as provided in an agreement approved under section 252 of the Communications Act of 1934, as amended.

(b) Except as provided in paragraph (b)(1) of this section, the affiliate required in paragraph (a) of this section shall be a separate legal entity from its affiliated exchange companies. The affiliate may be staffed by personnel of its affiliated exchange companies, housed in existing offices of its affiliated exchange companies, and use its affiliated exchange companies' marketing and other services, subject to paragraph (a)(3) of this section.

(1) For an incumbent independent LEC that provides in-region, interstate domestic interexchange services or in-region international interexchange services using no interexchange switching or transmission facilities or capability of the LEC's own (i.e., ''independent LEC reseller,'') the affiliate required in paragraph (a) of this section may be a separate corporate division of such incumbent independent LEC. All other provisions of this Subpart applicable to an independent LEC affiliate shall continue to apply, as applicable, to such separate corporate division.

(2) [Reserved]

[64 FR 44425, Aug. 16, 1999, as amended at 71 FR 65751, Nov. 9, 2006]

Subpart U—Customer Proprietary Network Information

SOURCE: 63 FR 20338, Apr. 24, 1998, unless otherwise noted.

§ 64.2001 Basis and purpose.

(a) *Basis*. The rules in this subpart are issued pursuant to the Communications Act of 1934, as amended.

(b) *Purpose*. The purpose of the rules in this subpart is to implement section 222 of the Communications Act of 1934, as amended, 47 U.S.C. 222.

§ 64.2003 Definitions.

(a) *Account information*. ''Account information'' is information that is specifically connected to the customer's service relationship with the carrier, including such things as an account number or any component thereof, the telephone number associated with the account, or the bill's amount.

(b) *Address of record*. An ''address of record,'' whether postal or electronic, is an address that the carrier has associated with the customer's account for at least 30 days.

(c) *Affiliate*. The term ''affiliate'' has the same meaning given such term in section 3(1) of the Communications Act of 1934, as amended, 47 U.S.C. 153(1).

(d) *Call detail information*. Any information that pertains to the transmission of specific telephone calls, including, for outbound calls, the number

called, and the time, location, or duration of any call and, for inbound calls, the number from which the call was placed, and the time, location, or duration of any call.

(e) *Communications-related services.* The term ''communications-related services'' means telecommunications services, information services typically provided by telecommunications carriers, and services related to the provision or maintenance of customer premises equipment.

(f) *Customer.* A customer of a telecommunications carrier is a person or entity to which the telecommunications carrier is currently providing service.

(g) *Customer proprietary network information (CPNI).* The term ''customer proprietary network information (CPNI)'' has the same meaning given to such term in section 222(h)(1) of the Communications Act of 1934, as amended, 47 U.S.C. 222(h)(1).

(h) *Customer premises equipment (CPE).* The term ''customer premises equipment (CPE)'' has the same meaning given to such term in section 3(14) of the Communications Act of 1934, as amended, 47 U.S.C. 153(14).

(i) *Information services typically provided by telecommunications carriers.* The phrase ''information services typically provided by telecommunications carriers'' means only those information services (as defined in section 3(20) of the Communication Act of 1934, as amended, 47 U.S.C. 153(20)) that are typically provided by telecommunications carriers, such as Internet access or voice mail services. Such phrase ''information services typically provided by telecommunications carriers,'' as used in this subpart, shall not include retail consumer services provided using Internet Web sites (such as travel reservation services or mortgage lending services), whether or not such services may otherwise be considered to be information services.

(j) *Local exchange carrier (LEC).* The term ''local exchange carrier (LEC)'' has the same meaning given to such term in section 3(26) of the Communications Act of 1934, as amended, 47 U.S.C. 153(26).

(k) *Opt-in approval.* The term ''opt-in approval'' refers to a method for obtaining customer consent to use, disclose, or permit access to the customer's CPNI. This approval method requires that the carrier obtain from the customer affirmative, express consent allowing the requested CPNI usage, disclosure, or access after the customer is provided appropriate notification of the carrier's request consistent with the requirements set forth in this subpart.

(l) *Opt-out approval.* The term ''opt-out approval'' refers to a method for obtaining customer consent to use, disclose, or permit access to the customer's CPNI. Under this approval method, a customer is deemed to have consented to the use, disclosure, or access to the customer's CPNI if the customer has failed to object thereto within the waiting period described in § 64.2008(d)(1) after the customer is provided appropriate notification of the carrier's request for consent consistent with the rules in this subpart.

(m) *Readily available biographical information.* ''Readily available biographical information'' is information drawn from the customer's life history and includes such things as the customer's social security number, or the last four digits of that number; mother's maiden name; home address; or date of birth.

(n) *Subscriber list information (SLI).* The term ''subscriber list information (SLI)'' has the same meaning given to such term in section 222(h)(3) of the Communications Act of 1934, as amended, 47 U.S.C. 222(h)(3).

(o) *Telecommunications carrier or carrier.* The terms ''telecommunications carrier'' or ''carrier'' shall have the same meaning as set forth in section 3(44) of the Communications Act of 1934, as amended, 47 U.S.C. 153(44). For the purposes of this subpart, the term ''telecommunications carrier'' or ''carrier'' shall include an entity that provides interconnected VoIP service, as that term is defined in section 9.3 of these rules.

(p) *Telecommunications service.* The term ''telecommunications service'' has the same meaning given to such term in section 3(46) of the Communications Act of 1934, as amended, 47 U.S.C. 153(46).

(q) *Telephone number of record.* The telephone number associated with the underlying service, not the telephone number supplied as a customer's ''contact information.''

(r) *Valid photo ID.* A ''valid photo ID'' is a government-issued means of personal identification with a photograph such as a driver's license, passport, or comparable ID that is not expired.

[72 FR 31961, June 8, 2007]

§ 64.2005 Use of customer proprietary network information without customer approval.

(a) Any telecommunications carrier may use, disclose, or permit access to CPNI for the purpose of providing or marketing service offerings among the categories of service (*i.e.*, local, interexchange, and CMRS) to which the customer already subscribes from the same carrier, without customer approval.

(1) If a telecommunications carrier provides different categories of service, and a customer subscribes to more than one category of service offered by the carrier, the carrier is permitted to share CPNI among the carrier's affiliated entities that provide a service offering to the customer.

(2) If a telecommunications carrier provides different categories of service, but a customer does not subscribe to more than one offering by the carrier, the carrier is not permitted to share CPNI with its affiliates, except as provided in § 64.2007(b).

(b) A telecommunications carrier may not use, disclose, or permit access to CPNI to market to a customer service offerings that are within a category of service to which the subscriber does not already subscribe from that carrier, unless that carrier has customer approval to do so, except as described in paragraph (c) of this section.

(1) A wireless provider may use, disclose, or permit access to CPNI derived from its provision of CMRS, without customer approval, for the provision of CPE and information service(s). A wireline carrier may use, disclose or permit access to CPNI derived from its provision of local exchange service or interexchange service, without customer approval, for the provision of CPE and call answering, voice mail or messaging, voice storage and retrieval services, fax store and forward, and protocol conversion.

(2) A telecommunications carrier may not use, disclose or permit access to CPNI to identify or track customers that call competing service providers. For example, a local exchange carrier may not use local service CPNI to track all customers that call local service competitors.

(c) A telecommunications carrier may use, disclose, or permit access to CPNI, without customer approval, as described in this paragraph (c).

(1) A telecommunications carrier may use, disclose, or permit access to CPNI, without customer approval, in its provision of inside wiring installation, maintenance, and repair services.

(2) CMRS providers may use, disclose, or permit access to CPNI for the purpose of conducting research on the health effects of CMRS.

(3) LECs, CMRS providers, and entities that provide interconnected VoIP service as that term is defined in § 9.3 of this chapter, may use CPNI, without customer approval, to market services formerly known as adjunct-to-basic services, such as, but not limited to, speed dialing, computer-provided directory assistance, call monitoring, call tracing, call blocking, call return, repeat dialing, call tracking, call waiting, caller I.D., call forwarding, and certain centrex features.

(d) A telecommunications carrier may use, disclose, or permit access to CPNI to protect the rights or property of the carrier, or to protect users of those services and other carriers from fraudulent, abusive, or unlawful use of, or subscription to, such services.

[63 FR 20338, Apr. 24, 1998, as amended at 64 FR 53264, Oct. 1, 1999; 67 FR 59211, Sept. 20, 2002; 72 FR 31962, June 8, 2007]

§ 64.2007 Approval required for use of customer proprietary network information.

(a) A telecommunications carrier may obtain approval through written, oral or electronic methods.

(1) A telecommunications carrier relying on oral approval shall bear the burden of demonstrating that such approval has been given in compliance

with the Commission's rules in this part.

(2) Approval or disapproval to use, disclose, or permit access to a customer's CPNI obtained by a telecommunications carrier must remain in effect until the customer revokes or limits such approval or disapproval.

(3) A telecommunications carrier must maintain records of approval, whether oral, written or electronic, for at least one year.

(b) *Use of Opt-Out and Opt-In Approval Processes.* A telecommunications carrier may, subject to opt-out approval or opt-in approval, use its customer's individually identifiable CPNI for the purpose of marketing communications-related services to that customer. A telecommunications carrier may, subject to opt-out approval or opt-in approval, disclose its customer's individually identifiable CPNI, for the purpose of marketing communications-related services to that customer, to its agents and its affiliates that provide communications-related services. A telecommunications carrier may also permit such persons or entities to obtain access to such CPNI for such purposes. Except for use and disclosure of CPNI that is permitted without customer approval under section § 64.2005, or that is described in this paragraph, or as otherwise provided in section 222 of the Communications Act of 1934, as amended, a telecommunications carrier may only use, disclose, or permit access to its customer's individually identifiable CPNI subject to opt-in approval.

[67 FR 59212, Sept. 20, 2002, as amended at 72 FR 31962, June 8, 2007]

§ 64.2008 Notice required for use of customer proprietary network information.

(a) *Notification, Generally.* (1) Prior to any solicitation for customer approval, a telecommunications carrier must provide notification to the customer of the customer's right to restrict use of, disclosure of, and access to that customer's CPNI.

(2) A telecommunications carrier must maintain records of notification, whether oral, written or electronic, for at least one year.

(b) Individual notice to customers must be provided when soliciting approval to use, disclose, or permit access to customers' CPNI.

(c) *Content of Notice.* Customer notification must provide sufficient information to enable the customer to make an informed decision as to whether to permit a carrier to use, disclose, or permit access to, the customer's CPNI.

(1) The notification must state that the customer has a right, and the carrier has a duty, under federal law, to protect the confidentiality of CPNI.

(2) The notification must specify the types of information that constitute CPNI and the specific entities that will receive the CPNI, describe the purposes for which CPNI will be used, and inform the customer of his or her right to disapprove those uses, and deny or withdraw access to CPNI at any time.

(3) The notification must advise the customer of the precise steps the customer must take in order to grant or deny access to CPNI, and must clearly state that a denial of approval will not affect the provision of any services to which the customer subscribes. However, carriers may provide a brief statement, in clear and neutral language, describing consequences directly resulting from the lack of access to CPNI.

(4) The notification must be comprehensible and must not be misleading.

(5) If written notification is provided, the notice must be clearly legible, use sufficiently large type, and be placed in an area so as to be readily apparent to a customer.

(6) If any portion of a notification is translated into another language, then all portions of the notification must be translated into that language.

(7) A carrier may state in the notification that the customer's approval to use CPNI may enhance the carrier's ability to offer products and services tailored to the customer's needs. A carrier also may state in the notification that it may be compelled to disclose CPNI to any person upon affirmative written request by the customer.

(8) A carrier may not include in the notification any statement attempting to encourage a customer to freeze third-party access to CPNI.

(9) The notification must state that any approval, or denial of approval for the use of CPNI outside of the service to which the customer already subscribes from that carrier is valid until the customer affirmatively revokes or limits such approval or denial.

(10) A telecommunications carrier's solicitation for approval must be proximate to the notification of a customer's CPNI rights.

(d) *Notice Requirements Specific to Opt-Out.* A telecommunications carrier must provide notification to obtain opt-out approval through electronic or written methods, but not by oral communication (except as provided in paragraph (f) of this section). The contents of any such notification must comply with the requirements of paragraph (c) of this section.

(1) Carriers must wait a 30-day minimum period of time after giving customers notice and an opportunity to opt-out before assuming customer approval to use, disclose, or permit access to CPNI. A carrier may, in its discretion, provide for a longer period. Carriers must notify customers as to the applicable waiting period for a response before approval is assumed.

(i) In the case of an electronic form of notification, the waiting period shall begin to run from the date on which the notification was sent; and

(ii) In the case of notification by mail, the waiting period shall begin to run on the third day following the date that the notification was mailed.

(2) Carriers using the opt-out mechanism must provide notices to their customers every two years.

(3) Telecommunications carriers that use e-mail to provide opt-out notices must comply with the following requirements in addition to the requirements generally applicable to notification:

(i) Carriers must obtain express, verifiable, prior approval from consumers to send notices via e-mail regarding their service in general, or CPNI in particular;

(ii) Carriers must allow customers to reply directly to e-mails containing CPNI notices in order to opt-out;

(iii) Opt-out e-mail notices that are returned to the carrier as undeliverable must be sent to the customer in another form before carriers may consider the customer to have received notice;

(iv) Carriers that use e-mail to send CPNI notices must ensure that the subject line of the message clearly and accurately identifies the subject matter of the e-mail; and

(v) Telecommunications carriers must make available to every customer a method to opt-out that is of no additional cost to the customer and that is available 24 hours a day, seven days a week. Carriers may satisfy this requirement through a combination of methods, so long as all customers have the ability to opt-out at no cost and are able to effectuate that choice whenever they choose.

(e) *Notice Requirements Specific to Opt-In.* A telecommunications carrier may provide notification to obtain opt-in approval through oral, written, or electronic methods. The contents of any such notification must comply with the requirements of paragraph (c) of this section.

(f) *Notice Requirements Specific to One-Time Use of CPNI.* (1) Carriers may use oral notice to obtain limited, one-time use of CPNI for inbound and outbound customer telephone contacts for the duration of the call, regardless of whether carriers use opt-out or opt-in approval based on the nature of the contact.

(2) The contents of any such notification must comply with the requirements of paragraph (c) of this section, except that telecommunications carriers may omit any of the following notice provisions if not relevant to the limited use for which the carrier seeks CPNI:

(i) Carriers need not advise customers that if they have opted-out previously, no action is needed to maintain the opt-out election;

(ii) Carriers need not advise customers that they may share CPNI with their affiliates or third parties and need not name those entities, if the limited CPNI usage will not result in use by, or disclosure to, an affiliate or third party;

(iii) Carriers need not disclose the means by which a customer can deny or withdraw future access to CPNI, so long as carriers explain to customers

that the scope of the approval the carrier seeks is limited to one-time use; and

(iv) Carriers may omit disclosure of the precise steps a customer must take in order to grant or deny access to CPNI, as long as the carrier clearly communicates that the customer can deny access to his CPNI for the call.

[67 FR 59212, Sept. 20, 2002]

§ 64.2009 Safeguards required for use of customer proprietary network information.

(a) Telecommunications carriers must implement a system by which the status of a customer's CPNI approval can be clearly established prior to the use of CPNI.

(b) Telecommunications carriers must train their personnel as to when they are and are not authorized to use CPNI, and carriers must have an express disciplinary process in place.

(c) All carriers shall maintain a record, electronically or in some other manner, of their own and their affiliates' sales and marketing campaigns that use their customers' CPNI. All carriers shall maintain a record of all instances where CPNI was disclosed or provided to third parties, or where third parties were allowed access to CPNI. The record must include a description of each campaign, the specific CPNI that was used in the campaign, and what products and services were offered as a part of the campaign. Carriers shall retain the record for a minimum of one year.

(d) Telecommunications carriers must establish a supervisory review process regarding carrier compliance with the rules in this subpart for outbound marketing situations and maintain records of carrier compliance for a minimum period of one year. Specifically, sales personnel must obtain supervisory approval of any proposed outbound marketing request for customer approval.

(e) A telecommunications carrier must have an officer, as an agent of the carrier, sign and file with the Commission a compliance certificate on an annual basis. The officer must state in the certification that he or she has personal knowledge that the company has established operating procedures that are adequate to ensure compliance with the rules in this subpart. The carrier must provide a statement accompanying the certificate explaining how its operating procedures ensure that it is or is not in compliance with the rules in this subpart. In addition, the carrier must include an explanation of any actions taken against data brokers and a summary of all customer complaints received in the past year concerning the unauthorized release of CPNI. This filing must be made annually with the Enforcement Bureau on or before March 1 in EB Docket No. 06–36, for data pertaining to the previous calendar year.

(f) Carriers must provide written notice within five business days to the Commission of any instance where the opt-out mechanisms do not work properly, to such a degree that consumers' inability to opt-out is more than an anomaly.

(1) The notice shall be in the form of a letter, and shall include the carrier's name, a description of the opt-out mechanism(s) used, the problem(s) experienced, the remedy proposed and when it will be/was implemented, whether the relevant state commission(s) has been notified and whether it has taken any action, a copy of the notice provided to customers, and contact information.

(2) Such notice must be submitted even if the carrier offers other methods by which consumers may opt-out.

[63 FR 20338, Apr. 24, 1998, as amended at 64 FR 53264, Oct. 1, 1999; 67 FR 59213, Sept. 20, 2002; 72 FR 31962, June 8, 2007]

§ 64.2010 Safeguards on the disclosure of customer proprietary network information.

(a) *Safeguarding CPNI.* Telecommunications carriers must take reasonable measures to discover and protect against attempts to gain unauthorized access to CPNI. Telecommunications carriers must properly authenticate a customer prior to disclosing CPNI based on customer-initiated telephone contact, online account access, or an in-store visit.

(b) *Telephone access to CPNI.* Telecommunications carriers may only disclose call detail information over the telephone, based on customer-initiated

telephone contact, if the customer first provides the carrier with a password, as described in paragraph (e) of this section, that is not prompted by the carrier asking for readily available biographical information, or account information. If the customer does not provide a password, the telecommunications carrier may only disclose call detail information by sending it to the customer's address of record, or by calling the customer at the telephone number of record. If the customer is able to provide call detail information to the telecommunications carrier during a customer-initiated call without the telecommunications carrier's assistance, then the telecommunications carrier is permitted to discuss the call detail information provided by the customer.

(c) *Online access to CPNI.* A telecommunications carrier must authenticate a customer without the use of readily available biographical information, or account information, prior to allowing the customer online access to CPNI related to a telecommunications service account. Once authenticated, the customer may only obtain online access to CPNI related to a telecommunications service account through a password, as described in paragraph (e) of this section, that is not prompted by the carrier asking for readily available biographical information, or account information.

(d) *In-store access to CPNI.* A telecommunications carrier may disclose CPNI to a customer who, at a carrier's retail location, first presents to the telecommunications carrier or its agent a valid photo ID matching the customer's account information.

(e) *Establishment of a Password and Back-up Authentication Methods for Lost or Forgotten Passwords.* To establish a password, a telecommunications carrier must authenticate the customer without the use of readily available biographical information, or account information. Telecommunications carriers may create a back-up customer authentication method in the event of a lost or forgotten password, but such back-up customer authentication method may not prompt the customer for readily available biographical information, or account information. If a customer cannot provide the correct password or the correct response for the back-up customer authentication method, the customer must establish a new password as described in this paragraph.

(f) *Notification of account changes.* Telecommunications carriers must notify customers immediately whenever a password, customer response to a back-up means of authentication for lost or forgotten passwords, online account, or address of record is created or changed. This notification is not required when the customer initiates service, including the selection of a password at service initiation. This notification may be through a carrier-originated voicemail or text message to the telephone number of record, or by mail to the address of record, and must not reveal the changed information or be sent to the new account information.

(g) *Business customer exemption.* Telecommunications carriers may bind themselves contractually to authentication regimes other than those described in this section for services they provide to their business customers that have both a dedicated account representative and a contract that specifically addresses the carriers' protection of CPNI.

[72 FR 31962, June 8, 2007]

§ 64.2011 Notification of customer proprietary network information security breaches.

(a) A telecommunications carrier shall notify law enforcement of a breach of its customers' CPNI as provided in this section. The carrier shall not notify its customers or disclose the breach publicly, whether voluntarily or under state or local law or these rules, until it has completed the process of notifying law enforcement pursuant to paragraph (b) of this section.

(b) As soon as practicable, and in no event later than seven (7) business days, after reasonable determination of the breach, the telecommunications carrier shall electronically notify the United States Secret Service (USSS) and the Federal Bureau of Investigation (FBI) through a central reporting facility. The Commission will maintain

a link to the reporting facility at *http://www.fcc.gov/eb/cpni*.

(1) Notwithstanding any state law to the contrary, the carrier shall not notify customers or disclose the breach to the public until 7 full business days have passed after notification to the USSS and the FBI except as provided in paragraphs (b)(2) and (b)(3) of this section.

(2) If the carrier believes that there is an extraordinarily urgent need to notify any class of affected customers sooner than otherwise allowed under paragraph (b)(1) of this section, in order to avoid immediate and irreparable harm, it shall so indicate in its notification and may proceed to immediately notify its affected customers only after consultation with the relevant investigating agency. The carrier shall cooperate with the relevant investigating agency's request to minimize any adverse effects of such customer notification.

(3) If the relevant investigating agency determines that public disclosure or notice to customers would impede or compromise an ongoing or potential criminal investigation or national security, such agency may direct the carrier not to so disclose or notify for an initial period of up to 30 days. Such period may be extended by the agency as reasonably necessary in the judgment of the agency. If such direction is given, the agency shall notify the carrier when it appears that public disclosure or notice to affected customers will no longer impede or compromise a criminal investigation or national security. The agency shall provide in writing its initial direction to the carrier, any subsequent extension, and any notification that notice will no longer impede or compromise a criminal investigation or national security and such writings shall be contemporaneously logged on the same reporting facility that contains records of notifications filed by carriers.

(c) *Customer notification*. After a telecommunications carrier has completed the process of notifying law enforcement pursuant to paragraph (b) of this section, it shall notify its customers of a breach of those customers' CPNI.

(d) *Recordkeeping*. All carriers shall maintain a record, electronically or in some other manner, of any breaches discovered, notifications made to the USSS and the FBI pursuant to paragraph (b) of this section, and notifications made to customers. The record must include, if available, dates of discovery and notification, a detailed description of the CPNI that was the subject of the breach, and the circumstances of the breach. Carriers shall retain the record for a minimum of 2 years.

(e) *Definitions*. As used in this section, a ''breach'' has occurred when a person, without authorization or exceeding authorization, has intentionally gained access to, used, or disclosed CPNI.

(f) This section does not supersede any statute, regulation, order, or interpretation in any State, except to the extent that such statute, regulation, order, or interpretation is inconsistent with the provisions of this section, and then only to the extent of the inconsistency.

[72 FR 31963, June 8, 2007]

Subpart V—Recording, Retention and Reporting of Data on Long-Distance Telephone Calls to Rural Areas and Reporting of Data on Long-Distance Telephone Calls to Nonrural Areas

SOURCE: 78 FR 76239, Dec. 17, 2013, unless otherwise noted.

§ 64.2101 Definitions.

For purposes of this subpart, the following definitions will apply:

Affiliate. The term ''affiliate'' has the same meaning as in 47 U.S.C. 153(2).

Call attempt. The term ''call attempt'' means a call that results in transmission by the covered provider toward an incumbent local exchange carrier (LEC) of the initial call setup message, regardless of the voice call signaling and transmission technology used.

Covered provider. The term ''covered provider'' means a provider of long-distance voice service that makes the initial long-distance call path choice for more than 100,000 domestic retail subscriber lines, counting the total of all

business and residential fixed subscriber lines and mobile phones and aggregated over all of the providers' affiliates. A covered provider may be a local exchange carrier as defined in § 64.4001(e), an interexchange carrier as defined in § 64.4001(d), a provider of commercial mobile radio service as defined in § 20.3 of this chapter, a provider of interconnected voice over Internet Protocol (VoIP) service as defined in 47 U.S.C. 153(25), or a provider of non-interconnected VoIP service as defined in 47 U.S.C. 153(36) to the extent such a provider offers the capability to place calls to the public switched telephone network.

Initial long-distance call path choice. The term ''initial long-distance call path choice'' means the static or dynamic selection of the path for a long-distance call based on the called number of the individual call.

Intermediate provider. The term ''intermediate provider'' has the same meaning as in § 64.1600(f).

Long-distance voice service. The term ''long-distance voice service'' includes interstate interLATA, intrastate interLATA, interstate interexchange, intrastate interexchange, inter-MTA interstate and inter-MTA intrastate voice services.

Operating company number (OCN). The term ''operating company number'' means a four-place alphanumeric code that uniquely identifies a local exchange carrier.

Rural OCN. The term ''rural OCN'' means an operating company number that uniquely identifies an incumbent LEC (as defined in § 51.5 of this chapter) that is a rural telephone company (as defined in § 51.5 of this chapter). The term ''nonrural OCN'' means an operating company number that uniquely identifies an incumbent LEC (as defined in § 51.5 of this chapter) that is not a rural telephone company (as defined in § 51.5 of this chapter). We direct NECA to update the lists of rural and nonrural OCNs annually and provide them to the Wireline Competition Bureau in time for the Bureau to publish the lists no later than November 15. These lists will be the definitive lists of rural OCNs and nonrural OCNs for purposes of this subpart for the following calendar year.

§ 64.2103 Retention of call attempt records.

(a) Except as described in § 64.2107, each covered provider shall record and retain information about each call attempt to a rural OCN from subscriber lines for which the covered provider makes the initial long-distance call path choice in a readily retrievable form for a period that includes the six most recent complete calendar months.

(b) Affiliated covered providers may record and retain the information required by this rule individually or in the aggregate.

(c) A call attempt that is returned by an intermediate provider to the covered provider and reassigned shall count as a single call attempt.

(d) Call attempts to toll-free numbers, as defined in § 52.101(f) of this chapter, are excluded from these requirements.

(e) The information contained in each record shall include:

(1) The calling party number;

(2) The called party number;

(3) The date;

(4) The time;

(5) An indication whether the call attempt was handed off to an intermediate provider or not and, if so, which intermediate provider;

(6) The rural OCN associated with the called party number;

(7) An indication whether the call attempt was interstate or intrastate;

(8) An indication whether the call attempt was answered, which may take the form of an SS7 signaling cause code or SIP signaling message code associated with each call attempt; and

(9) An indication whether the call attempt was completed to the incumbent local exchange carrier but signaled as busy, ring no answer, or unassigned number. This indication may take the form of an SS7 signaling cause code or SIP signaling message code associated with each call attempt.

EFFECTIVE DATE NOTE: At 78 FR 76239, Dec. 17, 2013, § 64.2103 was added. This section contains information collection and recordkeeping requirements and will not become effective until approval has been given by the Office of Management and Budget.

§ 64.2105 Reporting requirements.

(a) Except as described in § 64.2107, each covered provider shall submit a certified report to the Commission in electronic form on the following quarterly schedule: February 1 (reflecting monthly data from October through December), May 1 (reflecting monthly data from January through March), August 1 (reflecting monthly data from April through June), and November 1 (reflecting monthly data from July through September). An officer or director of each covered provider must certify to the accuracy of each report.

(b) The information contained in the certified report shall include the following information about subscriber lines for which the covered provider makes the initial long-distance call path choice, reported separately for each month in that quarter:

(1) For each rural OCN:

(i) The OCN;

(ii) The State;

(iii) The number of interstate call attempts;

(iv) The number of interstate call attempts that were answered;

(v) The number of interstate call attempts that were not answered, reported separately for call attempts signaled as busy, ring no answer, or unassigned number;

(vi) The number of intrastate call attempts;

(vii) The number of intrastate call attempts that were answered; and

(viii) The number of intrastate call attempts that were not answered, reported separately for call attempts signaled as busy, ring no answer, or unassigned number.

(2) For nonrural OCNs in the aggregate:

(i) The number of interstate call attempts;

(ii) The number of interstate call attempts that were answered;

(iii) The number of interstate call attempts that were not answered, reported separately for call attempts signaled as busy, ring no answer, or unassigned number;

(iv) The number of intrastate call attempts;

(v) The number of intrastate call attempts that were answered; and

(vi) The number of intrastate call attempts that were not answered, reported separately for call attempts signaled as busy, ring no answer, or unassigned number.

(c) In reporting the information described in paragraph (b) of this section, a covered provider may disaggregate calls originated by automatic telephone dialing systems (as defined in § 64.1200(f)) if it includes an explanation of the method used to identify those calls.

(d) Affiliated covered providers may report this information individually or in the aggregate.

EFFECTIVE DATE NOTE: At 78 FR 76239, Dec. 17, 2013, § 64.2105 was added. This section contains information collection and recordkeeping requirements and will not become effective until approval has been given by the Office of Management and Budget.

§ 64.2107 Reduced retention and reporting requirements for qualifying providers under the Safe Harbor.

(a)(1) A covered provider may reduce its retention and reporting obligations under this subpart if it files one of the following certifications, signed by an officer or director of the covered provider regarding the accuracy and completeness of the information provided, in WC Docket No. 13–39 on any of the four quarterly filing dates established in § 64.2105 and annually thereafter.

I _____ (name), _____ (title), an officer of _____ (entity), certify that_____ (entity) uses no intermediate providers;

or

I _____ (name), _____ (title), an officer of _____ (entity), certify that_____ (entity) restricts by contract any intermediate provider to which a call is directed by _____ (entity) from permitting more than one additional intermediate provider in the call path before the call reaches the terminating provider or terminating tandem. I certify that any nondisclosure agreement with an intermediate provider permits _____ (entity) to reveal the identity of the intermediate provider and any additional intermediate provider to the Commission and to the rural incumbent local exchange carrier(s) whose incoming long-distance calls are affected by the intermediate provider's

performance. I certify that _____ (entity) has a process in place to monitor the performance of its intermediate providers.

(2) Covered providers that file the second certification must describe the process they have in place to monitor the performance of their intermediate providers.

(b) A covered provider that meets the requirements described in paragraph (a) of this section must comply with the data retention requirements in § 64.2103 for a period that includes only the three most recent complete calendar months, so long as it continues to meet the requirements of paragraph (a) of this section. A covered provider that ceases to meet the requirements described in paragraph (a) of this must immediately begin retaining data for six months, as required by § 64.2103.

(c) A covered provider that meets the requirements described in paragraph (a) of this section must comply with the reporting requirements in § 64.2105 for a period of one year commencing when it first filed the certification described in paragraph (a) of this section, so long as it continues to meet those paragraph (a) of this section requirements. A covered provider that ceases to meet the requirements described in paragraph (a) of this section must begin filing the reports required by § 64.2105 on the next filing deadline.

(d) Affiliated covered providers may meet the requirements of paragraph (a) of this section individually or in the aggregate.

EFFECTIVE DATE NOTE: At 78 FR 76239, Dec. 17, 2013, § 64.2107 was added. This section contains information collection and recordkeeping requirements and will not become effective until approval has been given by the Office of Management and Budget.

§ 64.2109 Disclosure of data.

(a) Providers subject to the reporting requirements in § 64.2105 of this chapter may make requests for Commission nondisclosure of the data submitted under § 0.459 of this chapter by so indicating on the report at the time that the data are submitted.

(b) The Chief of the Wireline Competition Bureau will release information to states upon request, if the states are able to maintain the confidentiality of this information.

Subpart W—Ring Signaling Integrity

SOURCE: 78 FR 76241, Dec. 17, 2013, unless otherwise noted.

§ 64.2201 Ringing indication requirements.

(a) A long-distance voice service provider shall not convey a ringing indication to the calling party until the terminating provider has signaled that the called party is being alerted to an incoming call, such as by ringing.

(1) If the terminating provider signals that the called party is being alerted and provides an audio tone or announcement, originating providers must cease any locally generated audible tone or announcement and convey the terminating provider's tone or announcement to the calling party.

(2) The requirements in this paragraph apply to all voice call signaling and transmission technologies and to all long-distance voice service providers, including local exchange carriers as defined in § 64.4001(e), interexchange carriers as defined in § 64.4001(d), providers of commercial mobile radio service as defined in § 20.3 of this chapter, providers of interconnected voice over Internet Protocol (VoIP) service as defined in 47 U.S.C. 153(25), and providers of non-interconnected VoIP service as defined in 47 U.S.C. 153(36) to the extent such providers offer the capability to place calls to or receive calls from the public switched telephone network.

(b) Intermediate providers must return unaltered to providers in the call path any signaling information that indicates that the terminating provider is alerting the called party, such as by ringing.

(1) An intermediate provider may not generate signaling information that indicates the terminating provider is alerting the called party. An intermediate provider must pass the signaling information indicating that the called party is being alerted unaltered to subsequent providers in the call path.

(2) Intermediate providers must also return unaltered any audio tone or announcement provided by the terminating provider.

(3) In this section, the term ''intermediate provider'' has the same meaning as in § 64.1600(f).

(4) The requirements in this section apply to all voice call signaling and transmission technologies.

(c) The requirements in paragraphs (a) and (b) of this section apply to both interstate and intrastate calls, as well as to both originating and terminating international calls while they are within the United States.

Subpart X—Subscriber List Information

SOURCE: 64 FR 53947, Oct. 5, 2000, unless otherwise noted.

§ 64.2301 Basis and purpose.

(a) *Basis*. These rules are issued pursuant to the Communications Act of 1934, as amended.

(b) *Purpose*. The purpose of these rules is to implement section 222(e) of the Communications Act of 1934, as amended, 47 U.S.C. 222. Section 222(e) requires that ''a telecommunications carrier that provides telephone exchange service shall provide subscriber list information gathered in its capacity as a provider of such service on a timely and unbundled basis, under nondiscriminatory and reasonable rates, terms, and conditions, to any person upon request for the purpose of publishing directories in any format.''

§ 64.2305 Definitions.

Terms used in this subpart have the following meanings:

(a) *Base file subscriber list information*. A directory publisher requests base file subscriber list information when the publisher requests, as of a given date, all of a carrier's subscriber list information that the publisher wishes to include in one or more directories.

(b) *Business subscriber*. Business subscriber refers to a subscriber to telephone exchange service for businesses.

(c) *Primary advertising classification*. A primary advertising classification is the principal business heading under which a subscriber to telephone exchange service for businesses chooses to be listed in the yellow pages, if the carrier either assigns that heading or is obligated to provide yellow pages listings as part of telephone exchange service to businesses. In other circumstances, a primary advertising classification is the classification of a subscriber to telephone exchange service as a business subscriber.

(d) *Residential subscriber*. Residential subscriber refers to a subscriber to telephone exchange service that is not a business subscriber.

(e) *Subscriber list information*. Subscriber list information is any information:

(1) Identifying the listed names of subscribers of a carrier and such subscribers' telephone numbers, addresses, or primary advertising classifications (as such classifications are assigned at the time of the establishment of such service), or any combination of such listed names, numbers, addresses, or classifications; and

(2) That the carrier or an affiliate has published, caused to be published, or accepted for publication in any directory format.

(f) *Telecommunications carrier*. A telecommunications carrier is any provider of telecommunications services, except that such term does not include aggregators of telecommunications services (as defined in 47 U.S.C. 226(a)(2)).

(g) *Telephone exchange service*. Telephone exchange service means:

(1) Service within a telephone exchange, or within a connected system of telephone exchanges within the same exchange area operated to furnish to subscribers intercommunicating service of the character ordinarily furnished by a single exchange, and which is covered by the exchange service charge, or

(B) Comparable service provided through a system of switches, transmission equipment, or other facilities (or combination thereof) by which a subscriber can originate and terminate a telecommunications service.

(h) *Updated subscriber list information*. A directory publisher requests updated subscriber list information when the publisher requests changes to all or any part of a carrier's subscriber list

information occurring between specified dates.

§ 64.2309 Provision of subscriber list information.

(a) A telecommunications carrier that provides telephone exchange service shall provide subscriber list information gathered in its capacity as a provider of such service on a timely and unbundled basis, under nondiscriminatory and reasonable rates, terms, and conditions, to any person upon request for the purpose of publishing directories in any format.

(b) The obligation under paragraph (a) to provide a particular telephone subscriber's subscriber list information extends only to the carrier that provides that subscriber with telephone exchange service.

§ 64.2313 Timely basis.

(a) For purposes of § 64.2309, a telecommunications carrier provides subscriber list information on a timely basis only if the carrier provides the requested information to the requesting directory publisher either:

(1) At the time at which, or according to the schedule under which, the directory publisher requests that the subscriber list information be provided;

(2) When the carrier does not receive at least thirty days advance notice of the time the directory publisher requests that subscriber list information be provided, on the first business day that is at least thirty days from date the carrier receives that request; or

(3) At a time determined in accordance with paragraph (b) of this section.

(b) If a carrier's internal systems do not permit the carrier to provide subscriber list information within either of the time frames specified in paragraph (a)(1) of this section, the carrier shall:

(1) Within thirty days of receiving the publisher's request, inform the directory publisher that the requested schedule cannot be accommodated and tell the directory publisher which schedules can be accommodated; and

(2) Adhere to the schedule the directory publisher chooses from among the available schedules.

§ 64.2317 Unbundled basis.

(a) A directory publisher may request that a carrier unbundle subscriber list information on any basis for the purpose of publishing one or more directories.

(b) For purposes of § 64.2309, a telecommunications carrier provides subscriber list information on an unbundled basis only if the carrier provides:

(1) The listings the directory publisher requests and no other listings, products, or services; or

(2) Subscriber list information on a basis determined in accordance with paragraph (c) of this section.

(c) If the carrier's internal systems do not permit it unbundle subscriber list information on the basis a directory publisher requests, the carrier must:

(1) Within thirty days of receiving the publisher's request, inform the directory publisher that it cannot unbundle subscriber list information on the requested basis and tell the directory publisher the bases on which the carrier can unbundle subscriber list information; and

(2) In accordance with paragraph (d) of this section, provide subscriber list information to the directory publisher unbundled on the basis the directory publisher chooses from among the available bases.

(d) If a carrier provides a directory publisher listings in addition to those the directory publisher requests, the carrier may impose charges for, and the directory publisher may publish, only the requested listings.

(e) A carrier must not require directory publishers to purchase any product or service other than subscriber list information as a condition of obtaining subscriber list information.

§ 64.2321 Nondiscriminatory rates, terms, and conditions.

For purposes of § 64.2309, a telecommunications carrier provides subscriber list information under nondiscriminatory rates, terms, and conditions only if the carrier provides subscriber list information gathered in its capacity as a provider of telephone exchange service to a requesting directory publisher at the same rates,

terms, and conditions that the carrier provides the information to its own directory publishing operation, its directory publishing affiliate, or other directory publishers.

§ 64.2325 Reasonable rates, terms, and conditions.

(a) For purposes of § 64.2309, a telecommunications carrier will be presumed to provide subscriber list information under reasonable rates if its rates are no more than $0.04 a listing for base file subscriber list information and no more than $0.06 a listing for updated subscriber list information.

(b) For purposes of § 64.2309, a telecommunications carrier provides subscriber list information under reasonable terms and conditions only if the carrier does not restrict a directory publisher's choice of directory format.

§ 64.2329 Format.

(a) A carrier shall provide subscriber list information obtained in its capacity as a provider of telephone exchange service to a requesting directory publisher in the format the publisher specifies, if the carrier's internal systems can accommodate that format.

(b) If a carrier's internal systems do not permit the carrier to provide subscriber list information in the format the directory publisher specifies, the carrier shall:

(1) Within thirty days of receiving the publisher's request, inform the directory publisher that the requested format cannot be accommodated and tell the directory publisher which formats can be accommodated; and

(2) Provide the requested subscriber list information in the format the directory publisher chooses from among the available formats.

§ 64.2333 Burden of proof.

(a) In any future proceeding arising under section 222(e) of the Communications Act or § 64.2309, the burden of proof will be on the carrier to the extent it claims its internal subscriber list information systems cannot accommodate the delivery time, delivery schedule, unbundling level, or format requested by a directory publisher.

(b) In any future proceeding arising under section 222(e) of the Communications Act or § 64.2309, the burden of proof will be on the carrier to the extent it seeks a rate exceeding $0.04 per listing for base file subscriber list information or $0.06 per listing for updated subscriber list information.

§ 64.2337 Directory publishing purposes.

(a) Except to the extent the carrier and directory publisher otherwise agree, a directory publisher shall use subscriber list information obtained pursuant to section 222(e) of the Communications Act or § 64.2309 only for the purpose of publishing directories.

(b) A directory publisher uses subscriber list information ''for the purpose of publishing directories'' if the publisher includes that information in a directory, or uses that information to determine what information should be included in a directory, solicit advertisers for a directory, or deliver directories.

(c) A telecommunications carrier may require any person requesting subscriber list information pursuant to section 222(e) of the Communications Act or § 64.2309 to certify that the publisher will use the information only for purposes of publishing a directory.

(d) A carrier must provide subscriber list information to a requesting directory publisher even if the carrier believes that the directory publisher will use that information for purposes other than or in addition to directory publishing.

§ 64.2341 Record keeping.

(a) A telecommunications carrier must retain, for at least one year after its expiration, each written contract that it has executed for the provision of subscriber list information for directory publishing purposes to itself, an affiliate, or an entity that publishes directories on the carrier's behalf.

(b) A telecommunications carrier must maintain, for at least one year after the carrier provides subscriber list information for directory publishing purposes to itself, an affiliate, or an entity that publishes directories on the carrier's behalf, records of any of its rates, terms, and conditions for

providing that subscriber list information which are not set forth in a written contract.

(c) Except to the extent specified in paragraph (d), a carrier shall make the contracts and records described in paragraphs (a) and (b) available, upon request, to the Commission and to any directory publisher that requests those contracts and records for the purpose of publishing a directory.

(d) A carrier need not disclose to a directory publisher pursuant to paragraph (c) portions of requested contracts that are wholly unrelated to the rates, terms, or conditions under which the carrier provides subscriber list information to itself, an affiliate, or an entity that publishes directories on the carrier's behalf.

(e) A carrier may subject its disclosure of subscriber list information contracts or records to a directory publisher pursuant to paragraph (c) to a confidentiality agreement that limits access to and use of the information to the purpose of determining the rates, terms, and conditions under which the carrier provides subscriber list information to itself, an affiliate, or an entity that publishes directories on the carrier's behalf.

[28 FR 13239, Dec. 5, 1963, as amended at 69 FR 62816, Oct. 28, 2004]

§ 64.2345 Primary advertising classification.

A primary advertising classification is assigned at the time of the establishment of telephone exchange service if the carrier that provides telephone exchange service assigns the classification or if a tariff or State requirement obligates the carrier to provide yellow pages listings as part of telephone exchange service to businesses.

Subpart Y—Truth-in-Billing Requirements for Common Carriers; Billing for Unauthorized Charges

SOURCE: 64 FR 34497, June 25, 1999, unless otherwise noted.

§ 64.2400 Purpose and scope.

(a) The purpose of these rules is to reduce slamming and other telecommunications fraud by setting standards for bills for telecommunications service. These rules are also intended to aid customers in understanding their telecommunications bills, and to provide them with the tools they need to make informed choices in the market for telecommunications service.

(b) These rules shall apply to all telecommunications common carriers and to all bills containing charges for intrastate or interstate services, except as follows:

(1) Sections 64.2401(a)(2), 64.2401(a)(3), 64.2401(c), and 64.2401(f) shall not apply to providers of Commercial Mobile Radio Service as defined in § 20.9 of this chapter, or to other providers of mobile service as defined in § 20.7 of this chapter, unless the Commission determines otherwise in a further rulemaking.

(2) Sections 64.2401(a)(3) and 64.2401(f) shall not apply to bills containing charges only for intrastate services.

(c) *Preemptive effect of rules.* The requirements contained in this subpart are not intended to preempt the adoption or enforcement of consistent truth-in-billing requirements by the states.

[64 FR 34497, June 25, 1999; 64 FR 56177, Oct. 18, 1999; 65 FR 36637, June 9, 2000, as amended at 65 FR 43258, July 13, 2000; 69 FR 34950, June 23, 2004; 70 FR 29983, May 25, 2005; 77 FR 30919, May 24, 2012]

§ 64.2401 Truth-in-Billing Requirements.

(a) *Bill organization.* Telephone bills shall be clearly organized, and must comply with the following requirements:

(1) The name of the service provider associated with each charge must be clearly and conspicuously identified on the telephone bill.

(2) Where charges for two or more carriers appear on the same telephone bill, the charges must be separated by service provider.

(3) Carriers that place on their telephone bills charges from third parties for non-telecommunications services must place those charges in a distinct section of the bill separate from all

carrier charges. Charges in each distinct section of the bill must be separately subtotaled. These separate subtotals for carrier and non-carrier charges also must be clearly and conspicuously displayed along with the bill total on the payment page of a paper bill or equivalent location on an electronic bill. For purposes of this subparagraph ''equivalent location on an electronic bill'' shall mean any location on an electronic bill where the bill total is displayed and any location where the bill total is displayed before the bill recipient accesses the complete electronic bill, such as in an electronic mail message notifying the bill recipient of the bill and an electronic link or notice on a Web site or electronic payment portal.

(4) The telephone bill must clearly and conspicuously identify any change in service provider, including identification of charges from any new service provider. For purpose of this subparagraph ''new service provider'' means a service provider that did not bill the subscriber for service during the service provider's last billing cycle. This definition shall include only providers that have continuing relationships with the subscriber that will result in periodic charges on the subscriber's bill, unless the service is subsequently canceled.

(b) *Descriptions of billed charges.* Charges contained on telephone bills must be accompanied by a brief, clear, non-misleading, plain language description of the service or services rendered. The description must be sufficiently clear in presentation and specific enough in content so that customers can accurately assess that the services for which they are billed correspond to those that they have requested and received, and that the costs assessed for those services conform to their understanding of the price charged.

(c) *''Deniable'' and ''Non-Deniable'' Charges.* Where a bill contains charges for basic local service, in addition to other charges, the bill must distinguish between charges for which non-payment will result in disconnection of basic, local service, and charges for which non-payment will not result in such disconnection. The carrier must explain this distinction to the customer, and must clearly and conspicuously identify on the bill those charges for which non-payment will not result in disconnection of basic, local service. Carriers may also elect to devise other methods of informing consumers on the bill that they may contest charges prior to payment.

(d) *Clear and conspicuous disclosure of inquiry contacts.* Telephone bills must contain clear and conspicuous disclosure of any information that the subscriber may need to make inquiries about, or contest, charges on the bill. Common carriers must prominently display on each bill a toll-free number or numbers by which subscribers may inquire or dispute any charges on the bill. A carrier may list a toll-free number for a billing agent, clearinghouse, or other third party, provided such party possesses sufficient information to answer questions concerning the subscriber's account and is fully authorized to resolve the consumer's complaints on the carrier's behalf. Where the subscriber does not receive a paper copy of his or her telephone bill, but instead accesses that bill only by e-mail or internet, the carrier may comply with this requirement by providing on the bill an e-mail or web site address. Each carrier must make a business address available upon request from a consumer.

(e) *Definition of clear and conspicuous.* For purposes of this section, ''clear and conspicuous'' means notice that would be apparent to the reasonable consumer.

(f) *Blocking of third-party charges.* (1) Carriers that offer subscribers the option to block third-party charges from appearing on telephone bills must clearly and conspicuously notify subscribers of this option at the point of sale and on each carrier's Web site.

(2) Carriers that offer subscribers the option to block third-party charges from appearing on telephone bills must clearly and conspicuously notify subscribers of this option on each telephone bill.

[64 FR 34497, June 25, 1999, as amended at 65 FR 43258, July 13, 2000; 76 FR 63563, Oct. 13, 2011; 77 FR 30919, May 24, 2012; 77 FR 71354, Nov. 30, 2012]

Subpart Z—Prohibition on Exclusive Telecommunications Contracts

SOURCE: 66 FR 2334, Jan. 11, 2001, unless otherwise noted.

§ 64.2500 Prohibited agreements.

(a) No common carrier shall enter into any contract, written or oral, that would in any way restrict the right of any commercial multiunit premises owner, or any agent or representative thereof, to permit any other common carrier to access and serve commercial tenants on that premises.

(b) No common carrier shall enter into or enforce any contract, written or oral, that would in any way restrict the right of any residential multiunit premises owner, or any agent or representative thereof, to permit any other common carrier to access and serve residential tenants on that premises.

[73 FR 28057, May 15, 2008]

§ 64.2501 Scope of limitation.

For the purposes of this subpart, a multiunit premises is any contiguous area under common ownership or control that contains two or more distinct units. A commercial multiunit premises is any multiunit premises that is predominantly used for non-residential purposes, including for-profit, nonprofit, and governmental uses. A residential multiunit premises is any multiunit premises that is predominantly used for residential purposes.

73 FR 28057, May 15, 2008]

§ 64.2502 Effect of state law or regulation.

This subpart shall not preempt any state law or state regulation that requires a governmental entity to enter into a contract or understanding with a common carrier which would restrict such governmental entity's right to obtain telecommunications service from another common carrier.

Subpart AA—Universal Emergency Telephone Number

SOURCE: 67 FR 1649, Jan. 14, 2002, unless otherwise noted.

AUTHORITY: 47 U.S.C. 151, 154(i), 154(j), 157, 160, 210, 202, 208, 214, 251(e), 301, 303, 308, 309(j), and 310.

§ 64.3000 Definitions.

(a) *911 calls*. Any call initiated by an end user by dialing 911 for the purpose of accessing an emergency service provider. For wireless carriers, all 911 calls include those they are required to transmit pursuant to § 20.18 of the Commission's rules.

(b) *Appropriate local emergency authority*. An emergency answering point that has not been officially designated as a Public Safety Answering Point (PSAP), but has the capability of receiving 911 calls and either dispatching emergency services personnel or, if necessary, relaying the call to another emergency service provider. An appropriate local emergency authority may include, but is not limited to, an existing local law enforcement authority, such as the police, county sheriff, local emergency medical services provider, or fire department.

(c) *Public Safety Answering Point (PSAP)*. A facility that has been designated to receive 911 calls and route them to emergency services personnel.

(d) *Statewide default answering point*. An emergency answering point designated by the State to receive 911 calls for either the entire State or those portions of the State not otherwise served by a local PSAP.

§ 64.3001 Obligation to transmit 911 calls.

All telecommunications carriers shall transmit all 911 calls to a PSAP, to a designated statewide default answering point, or to an appropriate local emergency authority as set forth in § 64.3002.

§ 64.3002 Transition to 911 as the universal emergency telephone number.

As of December 11, 2001, except where 911 is already established as the exclusive emergency number to reach a

PSAP within a given jurisdiction, telecommunications carriers shall comply with the following transition periods:

(a) Where a PSAP has been designated, telecommunications carriers shall complete all translation and routing necessary to deliver 911 calls to a PSAP no later than September 11, 2002.

(b) Where no PSAP has been designated, telecommunications carriers shall complete all translation and routing necessary to deliver 911 calls to the statewide default answering point no later than September 11, 2002.

(c) Where neither a PSAP nor a statewide default answering point has been designated, telecommunications carriers shall complete the translation and routing necessary to deliver 911 calls to an appropriate local emergency authority, within nine months of a request by the State or locality.

(d) Where no PSAP nor statewide default answering point has been designated, and no appropriate local emergency authority has been selected by an authorized state or local entity, telecommunications carriers shall identify an appropriate local emergency authority, based on the exercise of reasonable judgment, and complete all translation and routing necessary to deliver 911 calls to such appropriate local emergency authority no later than September 11, 2002.

(e) Once a PSAP is designated for an area where none had existed as of December 11, 2001, telecommunications carriers shall complete the translation and routing necessary to deliver 911 calls to that PSAP within nine months of that designation.

§ 64.3003 Obligation for providing a permissive dialing period.

Upon completion of translation and routing of 911 calls to a PSAP, a statewide default answering point, to an appropriate local emergency authority, or, where no PSAP nor statewide default answering point has been designated and no appropriate local emergency authority has been selected by an authorized state or local entity, to an appropriate local emergency authority, identified by a telecommunications carrier based on the exercise of reasonable judgment, the telecommunications carrier shall provide permissive dialing between 911 and any other seven-or ten-digit emergency number or an abbreviated dialing code other than 911 that the public has previously used to reach emergency service providers until the appropriate State or local jurisdiction determines to phase out the use of such seven-or ten-digit number entirely and use 911 exclusively.

§ 64.3004 Obligation for providing an intercept message.

Upon termination of permissive dialing, as provided under § 64.3003, telecommunications carriers shall provide a standard intercept message announcement that interrupts calls placed to the emergency service provider using either a seven-or ten-digit emergency number or an abbreviated dialing code other than 911 and informs the caller of the dialing code change.

Subpart BB—Restrictions on Unwanted Mobile Service Commercial Messages

AUTHORITY: 15 U.S.C. 7701–7713, Public Law 108–187, 117 Stat. 2699.

§ 64.3100 Restrictions on mobile service commercial messages.

(a) No person or entity may initiate any mobile service commercial message, as those terms are defined in paragraph (c)(7) of this section, unless:

(1) That person or entity has the express prior authorization of the addressee;

(2) That person or entity is forwarding that message to its own address;

(3) That person or entity is forwarding to an address provided that

(i) The original sender has not provided any payment, consideration or other inducement to that person or entity; and

(ii) That message does not advertise or promote a product, service, or Internet website of the person or entity forwarding the message; or

(4) The address to which that message is sent or directed does not include a reference to a domain name that has been posted on the FCC's wireless domain names list for a period of at least 30 days before that message

was initiated, provided that the person or entity does not knowingly initiate a mobile service commercial message.

(b) Any person or entity initiating any mobile service commercial message must:

(1) Cease sending further messages within ten (10) days after receiving such a request by a subscriber;

(2) Include a functioning return electronic mail address or other Internet-based mechanism that is clearly and conspicuously displayed for the purpose of receiving requests to cease the initiating of mobile service commercial messages and/or commercial electronic mail messages, and that does not require the subscriber to view or hear further commercial content other than institutional identification;

(3) Provide to a recipient who electronically grants express prior authorization to send commercial electronic mail messages with a functioning option and clear and conspicuous instructions to reject further messages by the same electronic means that was used to obtain authorization;

(4) Ensure that the use of at least one option provided in paragraphs (b)(2) and (b)(3) of this section does not result in additional charges to the subscriber;

(5) Identify themselves in the message in a form that will allow a subscriber to reasonably determine that the sender is the authorized entity; and

(6) For no less than 30 days after the transmission of any mobile service commercial message, remain capable of receiving messages or communications made to the electronic mail address, other Internet-based mechanism or, if applicable, other electronic means provided by the sender as described in paragraph (b)(2) and (b)(3) of this section.

(c) *Definitions.* For the purpose of this subpart:

(1) *Commercial Mobile Radio Service Provider* means any provider that offers the services defined in 47 CFR Section 20.9.

(2) *Commercial electronic mail message* means the term as defined in the CAN–SPAM Act, 15 U.S.C 7702 and as further defined under 16 CFR 316.3. The term is defined as ''an electronic message for which the primary purpose is commercial advertisement or promotion of a commercial product or service (including content on an Internet Web site operated for a commercial purpose).'' The term ''commercial electronic mail message'' does not include a transactional or relationship message.

(3) *Domain name* means any alphanumeric designation which is registered with or assigned by any domain name registrar, domain name registry, or other domain name registration authority as part of an electronic address on the Internet.

(4) *Electronic mail address* means a destination, commonly expressed as a string of characters, consisting of a unique user name or mailbox and a reference to an Internet domain, whether or not displayed, to which an electronic mail message can be sent or delivered.

(5) *Electronic mail message* means a message sent to a unique electronic mail address.

(6) *Initiate,* with respect to a commercial electronic mail message, means to originate or transmit such messages or to procure the origination or transmission of such message, but shall not include actions that constitute routine conveyance of such message. For purposes of this paragraph, more than one person may be considered to have initiated a message. ''Routine conveyance'' means the transmission, routing, relaying, handling, or storing, through an automatic technical process, or an electronic mail message for which another person has identified the recipients or provided the recipient addresses.

(7) *Mobile Service Commercial Message* means a commercial electronic mail message that is transmitted directly to a wireless device that is utilized by a subscriber of a commercial mobile service (as such term is defined in section 332(d) of the Communications Act of 1934 (47 U.S.C. 332(d)) in connection with such service. A commercial message is presumed to be a mobile service commercial message if it is sent or directed to any address containing a reference, whether or not displayed, to an Internet domain listed on the FCC's wireless domain names list. The FCC's wireless domain names list will be available on the FCC's website and at

the Commission headquarters, 445 12th St., SW., Washington, DC 20554.

(8) *Transactional or relationship message* means the following and is further defined under 16 CFR 316.3 as any electronic mail message the primary purpose of which is:

(i) To facilitate, complete, or confirm a commercial transaction that the recipient has previously agreed to enter into with the sender;

(ii) To provide warranty information, product recall information, or safety or security information with respect to a commercial product or service used or purchased by the recipient;

(iii) To provide:

(A) Notification concerning a change in the terms or features of;

(B) Notification of a change in the recipient's standing or status with respect to; or

(C) At regular periodic intervals, account balance information or other type of account statement with respect to a subscription, membership, account, loan, or comparable ongoing commercial relationship involving the ongoing purchase or use by the recipient of products or services offered by the sender;

(D) To provide information directly related to an employment relationship or related benefit plan in which the recipient is currently involved, participating, or enrolled; or

(E) To deliver goods or services, including product updates or upgrades, that the recipient is entitled to receive under the terms of a transaction that the recipient has previously agreed to enter into with the sender.

(d) *Express Prior Authorization* may be obtained by oral or written means, including electronic methods.

(1) Written authorization must contain the subscriber's signature, including an electronic signature as defined by 15 U.S.C. 7001 (E-Sign Act).

(2) All authorizations must include the electronic mail address to which mobile service commercial messages can be sent or directed. If the authorization is made through a website, the website must allow the subscriber to input the specific electronic mail address to which commercial messages may be sent.

(3) Express Prior Authorization must be obtained by the party initiating the mobile service commercial message. In the absence of a specific request by the subscriber to the contrary, express prior authorization shall apply only to the particular person or entity seeking the authorization and not to any affiliated entities unless the subscriber expressly agrees to their being included in the express prior authorization.

(4) Express Prior Authorization may be revoked by a request from the subscriber, as noted in paragraph (b)(2) and (b)(3) of this section.

(5) All requests for express prior authorization must include the following disclosures:

(i) That the subscriber is agreeing to receive mobile service commercial messages sent to his/her wireless device from a particular sender. The disclosure must state clearly the identity of the business, individual, or other entity that will be sending the messages;

(ii) That the subscriber may be charged by his/her wireless service provider in connection with receipt of such messages; and

(iii) That the subscriber may revoke his/her authorization to receive MSCMs at any time.

(6) All notices containing the required disclosures must be clearly legible, use sufficiently large type or, if audio, be of sufficiently loud volume, and be placed so as to be readily apparent to a wireless subscriber. Any such disclosures must be presented separately from any other authorizations in the document or oral presentation. If any portion of the notice is translated into another language, then all portions of the notice must be translated into the same language.

(e) All CMRS providers must identify all electronic mail domain names used to offer subscribers messaging specifically for wireless devices in connection with commercial mobile service in the manner and time-frame described in a public notice to be issued by the Consumer & Governmental Affairs Bureau.

(f) Each CMRS provider is responsible for the continuing accuracy and completeness of information furnished for the FCC's wireless domain names list. CMRS providers must:

(1) File any future updates to listings with the Commission not less than 30 days before issuing subscribers any new or modified domain name;

(2) Remove any domain name that has not been issued to subscribers or is no longer in use within 6 months of placing it on the list or last date of use; and

(3) Certify that any domain name placed on the FCC's wireless domain names list is used for mobile service messaging.

[69 FR 55779, Sept. 16, 2004, as amended at 70 FR 34666, June 15, 2005]

Subpart CC—Customer Account Record Exchange Requirements

AUTHORITY: 47 U.S.C. 154, 201, 202, 222, 258 unless otherwise noted.

SOURCE: 70 FR 32263, June 2, 2005, unless otherwise noted.

§ 64.4000 Basis and purpose.

(a) *Basis*. The rules in this subpart are issued pursuant to the Communications Act of 1934, as amended.

(b) *Purpose*. The purpose of these rules is to facilitate the timely and accurate establishment, termination, and billing of customer telephone service accounts.

§ 64.4001 Definitions.

Terms in this subpart have the following meanings:

(a) *Automatic number identification (ANI)*. The term automatic number identification refers to the delivery of the calling party's billing telephone number by a local exchange carrier to any interconnecting carrier for billing or routing purposes.

(b) *Billing name and address (BNA)*. The term billing name and address means the name and address provided to a [LEC] by each of its local exchange customers to which the [LEC] directs bills for its services.

(c) *Customer*. The term customer means the end user to whom a local exchange carrier or interexchange carrier is providing local exchange or telephone toll service.

(d) *Interexchange carrier (IXC)*. The term interexchange carrier means a telephone company that provides telephone toll service. An interexchange carrier does not include commercial mobile radio service providers as defined by federal law.

(e) *Local exchange carrier (LEC)*. The term local exchange carrier means any person that is engaged in the provision of telephone exchange service or exchange access. Such term does not include a person insofar as such person is engaged in the provision of a commercial mobile service under § 332(c), except to the extent that the Commission finds that such service should be included in the definition of that term.

(f) *Preferred interexchange carrier (PIC)*. The term preferred interexchange carrier means the carrier to which a customer chooses to be presubscribed for purposes of receiving intraLATA and/or interLATA and/or international toll services.

§ 64.4002 Notification obligations of LECs.

To the extent that the information is reasonably available to a LEC, the LEC shall provide to an IXC the customer account information described in this section consistent with § 64.4004. Nothing in this section shall prevent a LEC from providing additional customer account information to an IXC to the extent that such additional information is necessary for billing purposes or to properly execute a customer's PIC order.

(a) *Customer-submitted PIC order*. Upon receiving and processing a PIC selection submitted by a customer and placing the customer on the network of the customer's preferred interexchange carrier at the LEC's local switch, the LEC must notify the IXC of this event. The notification provided by the LEC to the IXC must contain all of the customer account information necessary to allow for proper billing of the customer by the IXC including but not limited to:

(1) The customer's billing telephone number, working telephone number, and billing name and address;

(2) The effective date of the PIC change;

(3) A statement describing the customer type (i.e., business or residential);

(4) A statement indicating, to the extent appropriate, that the customer's telephone service listing is not printed in a directory and is not available from directory assistance or is not printed in a directory but is available from directory assistance;

(5) The jurisdictional scope of the PIC installation (i.e., intraLATA and/or interLATA and/or international);

(6) The carrier identification code of the IXC; and

(7) If relevant, a statement indicating that the customer's account is subject to a PIC freeze. The notification also must contain information, if relevant and to the extent that it is available, reflecting the fact that a customer's PIC selection was the result of:

(i) A move (an end user customer has moved from one location to another within a LEC's service territory);

(ii) A change in responsible billing party; or

(iii) The resolution of a PIC dispute.

(b) *Confirmation of IXC-submitted PIC order*. When a LEC has placed a customer on an IXC's network at the local switch in response to an IXC-submitted PIC order, the LEC must send a confirmation to the submitting IXC. The confirmation provided by the LEC to the IXC must include:

(1) The customer's billing telephone number, working telephone number, and billing name and address;

(2) The effective date of the PIC change;

(3) A statement describing the customer type (i.e., business or residential);

(4) A statement indicating, to the extent appropriate, if the customer's telephone service listing is not printed in a directory and is not available from directory assistance, or is not printed in a directory but is available from directory assistance;

(5) The jurisdictional scope of the PIC installation (i.e., intraLATA and/or interLATA and/or international); and

(6) The carrier identification code of the IXC. If the PIC order at issue originally was submitted by an underlying IXC on behalf of a toll reseller, the confirmation provided by the LEC to the IXC must indicate, to the extent that this information is known, a statement indicating that the customer's PIC is a toll reseller.

(c) *Rejection of IXC-submitted PIC order*. When a LEC rejects or otherwise does not act upon a PIC order submitted to it by an IXC, the LEC must notify the IXC and provide the reason(s) why the PIC order could not be processed. The notification provided by the LEC to the IXC must state that it has rejected the IXC-submitted PIC order and specify the reason(s) for the rejection (e.g., due to a lack of information, incorrect information, or a PIC freeze on the customer's account). The notification must contain the identical data elements that were provided to the LEC in the original IXC-submitted PIC order (i.e., mirror image of the original order), unless otherwise specified by this paragraph. If a LEC rejects an IXC-submitted PIC order for a multi-line account (i.e., the customer has selected the IXC as his PIC for two or more lines or terminals associated with his billing telephone number), the notification provided by the LEC rejecting that order must explain the effect of the rejection with respect to each line (working telephone number or terminal) associated with the customer's billing telephone number. A LEC is not required to generate a line-specific or terminal-specific response, however, and may communicate the rejection at the billing telephone level, when the LEC is unable to process an entire order, including all working telephone numbers and terminals associated with a particular billing telephone number. In addition, the notification must indicate the jurisdictional scope of the PIC order rejection (i.e., intraLATA and/or interLATA and/or international). If a LEC rejects a PIC order because:

(1) The customer's telephone number has been ported to another LEC; or

(2) The customer has otherwise changed local service providers, the LEC must include in its notification, to the extent that it is available, the identity of the customer's new LEC.

(d) *Customer contacts LEC or new IXC to change PIC(s) or customer contacts LEC or current IXC to change PIC to No-PIC*. When a LEC has removed at its local switch a presubscribed customer from an IXC's network in response to a

customer order, upon receipt of a properly verified PIC order submitted by another IXC, or in response to a notification from the customer's current IXC relating to the customer's request to change his or her PIC to No-PIC, the LEC must notify the customer's former IXC of this event. The LEC must provide to the IXC the customer account information that is necessary to allow for proper final billing of the customer by the IXC including but not limited to:

(1) The customer's billing telephone number, working telephone number, and billing name and address;

(2) The effective date of the PIC change;

(3) A description of the customer type (i.e., business or residential);

(4) The jurisdictional scope of the lines or terminals affected (i.e., intraLATA and/or interLATA and/or international); and

(5) The carrier identification code of the IXC. If a customer changes PICs but retains the same LEC, the LEC is responsible for notifying both the old PIC and new PIC of the PIC change. The notification also must contain information, if relevant and to the extent that it is available, reflecting the fact that a customer's PIC removal was the result of:

(i) The customer moving from one location to another within the LEC's service territory, but where there is no change in local service provider;

(ii) A change of responsible party on an account; or

(iii) A disputed PIC selection.

(e) *Particular changes to customer's local service account.* When, according to a LEC's records, certain account or line information changes occur on a presubscribed customer's account, the LEC must communicate this information to the customer's PIC. For purposes of this paragraph, the LEC must provide to the appropriate IXC account change information that is necessary for the IXC to issue timely and accurate bills to its customers including but not limited to:

(1) The customer's billing telephone number, working telephone number, and billing name and address;

(2) The customer code assigned to that customer by the LEC;

(3) The type of customer account (i.e., business or residential);

(4) The status of the customer's telephone service listing, to the extent appropriate, as not printed in a directory and not available from directory assistance, or not printed in a directory but available from directory assistance; and

(5) The jurisdictional scope of the PIC installation (i.e., intraLATA and/or interLATA and/or international);

(6) The effective date of any change to a customer's local service account; and

(7) The carrier identification code of the IXC. If there are changes to the customer's billing or working telephone number, customer code, or customer type, the LEC must supply both the old and new information for each of these categories.

(f) *Local service disconnection.* Upon receipt of an end user customer's request to terminate his entire local service account or disconnect one or more lines (but not all lines) of a multi-line account, the LEC must notify the PIC(s) for the billing telephone number or working telephone number on the account of the account termination or lines disconnected. In conjunction with this notification requirement, the LEC must provide to a customer's PIC(s) all account termination or single/multi-line disconnection change information necessary for the PIC(s) to maintain accurate billing and PIC records, including but not limited to:

(1) The effective date of the termination/disconnection; and

(2) The customer's working and billing telephone numbers and billing name and address;

(3) The type of customer account (i.e., business or residential);

(4) The jurisdictional scope of the PIC installation (i.e., intraLATA and/or interLATA and/or international); and

(5) The carrier identification code of the IXC.

(g) *Change of local service provider.* When a customer changes LECs, the customer's former LEC must notify the customer's PIC(s) of the customer's change in LEC and, if known, the identity of the customer's new LEC. If the

customer also makes a PIC change, the customer's former LEC must also notify the customer's former PIC(s) of the change. When a customer only changes LECs, the new LEC must notify the customer's current PIC(s) that the customer's PIC selection has not changed. If the customer also makes a PIC change, the new LEC must notify the customer's new PIC of the customer's PIC selection. If the customer's former LEC is unable to identify the customer's new LEC, the former LEC must notify the customer's PIC(s) of a local service disconnection as described in paragraph (f).

(1) The required notifications also must contain information, if relevant and to the extent that it is available, reflecting the fact that an account change was the result of:

(i) The customer porting his number to a new LEC;

(ii) A local resale arrangement (customer has transferred to local reseller); or

(iii) The discontinuation of a local resale arrangement;

(2) The notification provided by the LEC to the IXC must include:

(i) The customer's billing telephone number, working telephone number, and, billing name and address;

(ii) The effective date of the change of local service providers or PIC change;

(iii) A description of the customer type (i.e., business or residential);

(iv) The jurisdictional scope of the lines or terminals affected (i.e., intraLATA and/or interLATA and/or international); and

(v) The carrier identification code of the IXC.

(h) *IXC requests for customer BNA information*. Upon the request of an IXC, a LEC must provide the billing name and address information necessary to facilitate a customer's receipt of a timely, accurate bill for services rendered and/or to prevent fraud, regardless of the type of service the end user receives/has received from the requesting carrier (i.e., presubscribed, dial-around, casual). In response to an IXC's BNA request for ANI, a LEC must provide the BNA for the submitted ANI along with:

(1) The working telephone number for the ANI;

(2) The date of the BNA response;

(3) The carrier identification code of the submitting IXC; and

(4) A statement indicating, to the extent appropriate, if the customer's telephone service listing is not printed in a directory and is not available from directory assistance, or is not printed in a directory but is available from directory assistance. A LEC that is unable to provide the BNA requested must provide the submitting carrier with the identical information contained in the original BNA request (i.e., the mirror image of the original request), along with the specific reason(s) why the requested information could not be provided. If the BNA is not available because the customer has changed local service providers or ported his telephone number, the LEC must include the identity of the new provider when this information is available.

[71 FR 74821, Dec. 13, 2006]

§ 64.4003 Notification obligations of IXCs.

To the extent that the information is reasonably available to an IXC, the IXC shall provide to a LEC the customer account information described in this section consistent with § 64.4004. Nothing in this section shall prevent an IXC from providing additional customer account information to a LEC to the extent that such additional information is necessary for billing purposes or to properly execute a customer's PIC Order.

(a) *IXC-submitted PIC Order*. When a customer contacts an IXC to establish interexchange service on a presubscribed basis, the IXC selected must submit the customer's properly verified PIC Order (*see* 47 CFR 64.1120(a)) to the customer's LEC, instructing the LEC to install or change the PIC for the customer's line(s) to that IXC. The notification provided by the IXC to the LEC must contain all of the information necessary to properly execute the Order including but not limited to:

(1) The customer's billing telephone number or working telephone number

associated with the lines or terminals that are to be presubscribed to the IXC;

(2) The date of the IXC-submitted PIC Order;

(3) The jurisdictional scope of the PIC Order (*i.e*, intraLATA and/or interLATA and/or international); and

(4) The carrier identification code of the submitting IXC.

(b) *Customer contacts IXC to cancel PIC and to select no-PIC status*. When an end user customer contacts an IXC to discontinue interexchange service on a presubscribed basis, the IXC must confirm that it is the customer's desire to have no PIC and, if that is the case, the IXC must notify the customer's LEC. The IXC also is encouraged to instruct the customer to notify his LEC. An IXC may satisfy this requirement by establishing a three-way call with the customer and the customer's LEC to confirm that it is the customer's desire to have no PIC and, where appropriate, to provide the customer the opportunity to withdraw any PIC freeze that may be in place. The notification provided by the IXC to the LEC must contain the customer account information necessary to properly execute the cancellation Order including but not limited to:

(1) The customer's billing telephone number or working telephone number associated with the lines or terminals that are affected;

(2) The date of the IXC-submitted PIC removal Order;

(3) The jurisdictional scope of the PIC removal Order (*i.e.*, intraLATA and/or interLATA and/or international); and

(4) The carrier identification code of the submitting IXC.

[70 FR 32263, June 2, 2005; 70 FR 54301, Sept. 14, 2005]

§ 64.4004 Timeliness of required notifications.

Carriers subject to the requirements of this section shall provide the required notifications promptly and without unreasonable delay.

§ 64.4005 Unreasonable terms or conditions on the provision of customer account information.

To the extent that a carrier incurs costs associated with providing the notifications required by this section, the carrier may recover such costs, consistent with federal and state laws, through the filing of tariffs, via negotiated agreements, or by other appropriate mechanisms. Any cost recovery method must be reasonable and must recover only costs that are associated with providing the particular information. The imposition of unreasonable terms or conditions on the provision of information required by this section may be considered an unreasonable carrier practice under section 201(b) of the Communications Act of 1934, as amended, and may subject the carrier to appropriate enforcement action.

§ 64.4006 Limitations on use of customer account information.

A carrier that receives customer account information under this section shall use such information to ensure timely and accurate billing of a customer's account and to ensure timely and accurate execution of a customer's preferred interexchange carrier instructions. Such information shall not be used for marketing purposes without the express consent of the customer.

Subpart DD—Prepaid Calling Card Providers

SOURCE: 71 FR 43673, Aug. 2, 2006, unless otherwise noted.

§ 64.5000 Definitions.

(a) *Prepaid calling card*. The term ''prepaid calling card'' means a card or similar device that allows users to pay in advance for a specified amount of calling, without regard to additional features, functions, or capabilities available in conjunction with the calling service.

(b) *Prepaid calling card provider*. The term ''prepaid calling card provider'' means any entity that provides telecommunications service to consumers through the use of a prepaid calling card.

§ 64.5001 Reporting and certification requirements.

(a) All prepaid calling card providers must report prepaid calling card percentage of interstate use (PIU) factors,

and call volumes from which these factors were calculated, based on not less than a one-day representative sample, to those carriers from which they purchase transport services. Such reports must be provided no later than the 45th day of each calendar quarter for the previous quarter.

(b) If a prepaid calling card provider fails to provide the appropriate PIU information to a transport provider in the time allowed, the transport provider may apply a 50 percent default PIU factor to the prepaid calling card provider's traffic.

(c) On a quarterly basis, every prepaid calling card provider must submit to the Commission a certification, signed by an officer of the company under penalty of perjury, providing the following information with respect to the prior quarter:

(1) The percentage of intrastate, interstate, and international calling card minutes for that reporting period;

(2) The percentage of total prepaid calling card service revenue (excluding revenue from prepaid calling cards sold by, to, or pursuant to contract with the Department of Defense (DoD) or a DoD entity) attributable to interstate and international calls for that reporting period;

(3) A statement that it is making the required Universal Service Fund contribution based on the reported information; and

(4) A statement that it has complied with the reporting requirements described in paragraph (a) of this section.

Subpart EE—TRS Customer Proprietary Network Information.

SOURCE: 78 FR 40613, July 5, 2013, unless otherwise noted.

§ 64.5101 Basis and purpose.

(a) *Basis*. The rules in this subpart are issued pursuant to the Communications Act of 1934, as amended.

(b) *Purpose*. The purpose of the rules in this subpart is to implement customer proprietary network information protections for users of telecommunications relay services pursuant to sections 4, 222, and 225 of the Communications Act of 1934, as amended, 47 U.S.C. 4, 222, and 225.

§ 64.5103 Definitions.

(a) *Address of record*. An ''address of record,'' whether postal or electronic, is an address that the TRS provider has associated with the customer for at least 30 days.

(b) *Affiliate*. The term ''affiliate'' shall have the same meaning given such term in section 3 of the Communications Act of 1934, as amended, 47 U.S.C. 153.

(c) *Call data information*. The term ''call data information'' means any information that pertains to the handling of specific TRS calls, including the call record identification sequence, the communications assistant identification number, the session start and end times, the conversation start and end times, incoming and outbound telephone numbers, incoming and outbound internet protocol (IP) addresses, total conversation minutes, total session minutes, and the electronic serial number of the consumer device.

(d) *Communications assistant (CA)*. The term ''communications assistant'' or ''CA'' shall have the same meaning given to the term in § 64.601(a) of this part.

(e) *Customer*. The term ''customer'' means a person:

(1) To whom the TRS provider provides TRS or point-to-point service, or

(2) Who is registered with the TRS provider as a default provider.

(f) *Customer proprietary network information (CPNI)*. The term ''customer proprietary network information'' or ''CPNI'' means information that relates to the quantity, technical configuration, type, destination, location, and amount of use of a telecommunications service used by any customer of a TRS provider; and information regarding a customer's use of TRS contained in the documentation submitted by a TRS provider to the TRS Fund administrator in connection with a request for compensation for the provision of TRS.

(g) *Customer premises equipment (CPE)*. The term ''customer premises equipment'' or ''CPE'' shall have the same meaning given to such term in section 3 of the Communications Act of 1934, as amended, 47 U.S.C. 153.

(h) *Default provider*. The term ''default provider'' shall have the same

meaning given such term in § 64.601(a) of this part.

(i) *Internet-based TRS (iTRS).* The term ''Internet-based TRS'' or ''iTRS shall have the same meaning given to the term in § 64.601(a) of this part.

(j) *iTRS access technology.* The term ''iTRS access technology'' shall have the same meaning given to the term in § 64.601(a) of this part.

(k) *Opt-in approval.* The term ''opt-in approval'' shall have the same meaning given such term in § 64.5107(b)(1) of this subpart.

(l) *Opt-out approval.* The term ''opt-out approval'' shall have the same meaning given such term in § 64.5107(b)(2) of this subpart.

(m) *Point-to-point service.* The term ''point-to-point service'' means a service that enables a VRS customer to place and receive non-relay calls without the assistance of a CA over the VRS provider facilities using VRS access technology. Such calls are made by means of ten-digit NANP numbers assigned to customers by VRS providers. The term ''point-to-point call'' shall refer to a call placed via a point-to-point service.

(n) *Readily available biographical information.* The term ''readily available biographical information'' means information drawn from the customer's life history and includes such things as the customer's social security number, or the last four digits of that number; mother's maiden name; home address; or date of birth.

(o) *Sign language.* The term ''sign language'' shall have the same meaning given to the term in § 64.601(a) of this part.

(p) *Telecommunications relay services (TRS).* The term ''telecommunications relay services'' or ''TRS'' shall have the same meaning given to such term in § 64.601(a) of this part.

(q) *Telephone number of record.* The term ''telephone number of record'' means the telephone number associated with the provision of TRS, which may or may not be the telephone number supplied as part of a customer's ''contact information.''

(r) *TRS Fund.* The term ''TRS Fund'' shall have the same meaning given to the term in § 64.604(c)(5)(iii) of this part.

(s) *TRS provider.* The term ''TRS provider'' means an entity that provides TRS and shall include an entity that provides point-to-point service.

(t) *TRS-related services.* The term ''TRS-related services'' means, in the case of traditional TRS, services related to the provision or maintenance of customer premises equipment, and in the case of iTRS, services related to the provision or maintenance of iTRS access technology, including features and functions typically provided by TRS providers in association with iTRS access technology.

(u) *Valid photo ID.* The term ''valid photo ID'' means a government-issued means of personal identification with a photograph such as a driver's license, passport, or comparable ID that has not expired.

(v) *Video relay service.* The term ''video relay service'' or VRS shall have the same meaning given to the term in § 64.601(a) of this part.

(w) *VRS access technology.* The term ''VRS access technology'' shall have the same meaning given to the term in § 64.601(a) of this part.

EFFECTIVE DATE NOTE: At 78 FR 40613, July 5, 2013, § 64.5104 was added. Paragraphs (c)(4) and (c)(5) contain information collection and recordkeeping requirements and will not become effective until approval has been given by the Office of Management and Budget.

§ 64.5105 Use of customer proprietary network information without customer approval.

(a) A TRS provider may use, disclose, or permit access to CPNI for the purpose of providing or lawfully marketing service offerings among the categories of service (*i.e.*, type of TRS) for which the TRS provider is currently the default provider for that customer, without customer approval.

(1) If a TRS provider provides different categories of TRS, and the TRS provider is currently the default provider for that customer for more than one category of TRS offered by the TRS provider, the TRS provider may share CPNI among the TRS provider's affiliated entities that provide a TRS offering to the customer.

(2) If a TRS provider provides different categories of TRS, but the TRS provider is currently not the default

provider for that customer for more than one offering by the TRS provider, the TRS provider shall not share CPNI with its affiliates, except as provided in § 64.5107(b) of this subpart.

(b) A TRS provider shall not use, disclose, or permit access to CPNI as described in this paragraph (b).

(1) A TRS provider shall not use, disclose, or permit access to CPNI to market to a customer TRS offerings that are within a category of TRS for which the TRS provider is not currently the default provider for that customer, unless that TRS provider has customer approval to do so.

(2) A TRS provider shall not identify or track CPNI of customers that call competing TRS providers and, notwithstanding any other provision of this subpart, a TRS provider shall not use, disclose or permit access to CPNI related to a customer call to a competing TRS provider.

(c) A TRS provider may use, disclose, or permit access to CPNI, without customer approval, as described in this paragraph (c).

(1) A TRS provider may use, disclose or permit access to CPNI derived from its provision of TRS without customer approval, for the provision of CPE or iTRS access technology, and call answering, voice or video mail or messaging, voice or video storage and retrieval services.

(2) A TRS provider may use, disclose, or permit access to CPNI, without customer approval, in its provision of inside wiring installation, maintenance, and repair services.

(3) A TRS provider may use CPNI, without customer approval, to market services formerly known as adjunct-to-basic services, such as, but not limited to, speed dialing, call waiting, caller I.D., and call forwarding, only to those customers that are currently registered with that TRS provider as their default provider.

(4) A TRS provider shall use, disclose, or permit access to CPNI to the extent necessary to:

(i) Accept and handle 911/E911 calls;

(ii) Access, either directly or via a third party, a commercially available database that will allow the TRS provider to determine an appropriate Public Safety Answering Point, designated statewide default answering point, or appropriate local emergency authority that corresponds to the caller's location;

(iii) Relay the 911/E911 call to that entity; and

(iv) Facilitate the dispatch and response of emergency service or law enforcement personnel to the caller's location, in the event that the 911/E911 call is disconnected or the caller becomes incapacitated.

(5) A TRS provider shall use, disclose, or permit access to CPNI upon request by the administrator of the TRS Fund, as that term is defined in § 64.604(c)(5)(iii) of this part, or by the Commission for the purpose of administration and oversight of the TRS Fund, including the investigation and prevention of fraud, abuse, and misuse of TRS and seeking repayment to the TRS Fund for non-compensable minutes.

(6) A TRS provider may use, disclose, or permit access to CPNI to protect the rights or property of the TRS provider, or to protect users of those services, other TRS providers, and the TRS Fund from fraudulent, abusive, or unlawful use of such services.

EFFECTIVE DATE NOTES: At 78 FR 40613, July 5, 2013, § 64.5105 was added, however, paragraphs (c)(4) and (c)(5) contain information collection and recordkeeping requirements and will not become effective until approval has been given by the Office of Management and Budget.

§ 64.5107 Approval required for use of customer proprietary network information.

(a) A TRS provider may obtain approval through written, oral, electronic, or sign language methods.

(1) A TRS provider relying on oral or sign language approval shall bear the burden of demonstrating that such approval has been given in compliance with the Commission's rules in this part.

(2) Approval or disapproval to use, disclose, or permit access to a customer's CPNI obtained by a TRS provider must remain in effect until the customer revokes or limits such approval or disapproval. A TRS provider shall accept any such customer revocation, whether in written, oral, electronic, or sign language methods.

(3) A TRS provider must maintain records of approval, whether oral, written, electronic, or sign language, during the time period that the approval or disapproval is in effect and for at least one year thereafter.

(b) *Use of opt-in and opt-out approval processes.* (1) Opt-in approval requires that the TRS provider obtain from the customer affirmative, express consent allowing the requested CPNI usage, disclosure, or access after the customer is provided appropriate notification of the TRS provider's request consistent with the requirements set forth in this subpart.

(2) With opt-out approval, a customer is deemed to have consented to the use, disclosure, or access to the customer's CPNI if the customer has failed to object thereto within the waiting period described in § 64.5108(d)(1) of this subpart after the TRS provider has provided to the customer appropriate notification of the TRS provider's request for consent consistent with the rules in this subpart.

(3) A TRS provider may only use, disclose, or permit access to the customer's individually identifiable CPNI with the customer's opt-in approval, except as follows:

(i) Where a TRS provider is permitted to use, disclose, or permit access to CPNI without customer approval under § 64.5105 of this subpart.

(ii) Where a TRS provider is permitted to use, disclose, or permit access to CPNI by making use of customer opt-in or opt-out approval under paragraph (?)(4) of this section.

(4) A TRS provider may make use of customer opt-in or opt-out approval to take the following actions with respect to CPNI:

(i) Use its customer's individually identifiable CPNI for the purpose of lawfully marketing TRS-related services to that customer.

(ii) Disclose its customer's individually identifiable CPNI to its agents and its affiliates that provide TRS-related services for the purpose of lawfully marketing TRS-related services to that customer. A TRS provider may also permit such persons or entities to obtain access to such CPNI for such purposes.

EFFECTIVE DATE NOTE: At 78 FR 40613, July 5, 2013, § 64.5107 was added. This section contain information collection and recordkeeping requirements and will not become effective until approval has been given by the Office of Management and Budget.

§ 64.5108 Notice required for use of customer proprietary network information.

(a) *Notification, generally.* (1) Prior to any solicitation for customer approval to use, disclose, or permit access to CPNI, a TRS provider shall provide notification to the customer of the customer's right to deny or restrict use of, disclosure of, and access to that customer's CPNI.

(2) A TRS provider shall maintain records of notification, whether oral, written, electronic, or sign language, during the time period that the approval is in effect and for at least one year thereafter.

(b) *Individual notice.* A TRS provider shall provide individual notice to customers when soliciting approval to use, disclose, or permit access to customers' CPNI.

(c) *Content of notice.* Customer notification shall provide sufficient information in clear and unambiguous language to enable the customer to make an informed decision as to whether to permit a TRS provider to use, disclose, or permit access to, the customer's CPNI.

(1) The notification shall state that the customer has a right to deny any TRS provider the right to use, disclose or permit access to the customer's CPNI, and the TRS provider has a duty, under federal law, to honor the customer's right and to protect the confidentiality of CPNI.

(2) The notification shall specify the types of information that constitute CPNI and the specific entities that will use, receive or have access to the CPNI, describe the purposes for which CPNI will be used, and inform the customer of his or her right to disapprove those uses, and deny or withdraw the customer's consent to use, disclose, or permit access to access to CPNI at any time.

(3) The notification shall advise the customer of the precise steps the customer must take in order to grant or deny use, disclosure, or access to CPNI,

and must clearly state that customer denial of approval will not affect the TRS provider's provision of any services to the customer. However, TRS providers may provide a brief statement, in clear and neutral language, describing consequences directly resulting from the lack of access to CPNI.

(4) TRS providers shall provide the notification in a manner that is accessible to the customer, comprehensible, and not misleading.

(5) If the TRS provider provides written notification to the customer, the notice shall be clearly legible, use sufficiently large type, and be placed in an area so as to be readily apparent to a customer.

(6) If any portion of a notification is translated into another language, then all portions of the notification must be translated into that language.

(7) A TRS provider may state in the notification that the customer's approval to use CPNI may enhance the TRS provider's ability to offer products and services tailored to the customer's needs. A TRS provider also may state in the notification that it may be compelled to disclose CPNI to any person upon affirmative written request by the customer.

(8) The notification shall state that any approval or denial of approval for the use of CPNI outside of the service for which the TRS provider is the default provider for the customer is valid until the customer affirmatively revokes or limits such approval or denial.

(9) A TRS provider's solicitation for approval to use, disclose, or have access to the customer's CPNI must be proximate to the notification of a customer's CPNI rights to non-disclosure.

(d) *Notice requirements specific to opt-out.* A TRS provider shall provide notification to obtain opt-out approval through electronic or written methods, but not by oral or sign language communication (except as provided in paragraph (f) of this section). The contents of any such notification shall comply with the requirements of paragraph (c) of this section.

(1) TRS providers shall wait a 30-day minimum period of time after giving customers notice and an opportunity to opt-out before assuming customer approval to use, disclose, or permit access to CPNI. A TRS provider may, in its discretion, provide for a longer period. TRS providers shall notify customers as to the applicable waiting period for a response before approval is assumed.

(i) In the case of an electronic form of notification, the waiting period shall begin to run from the date on which the notification was sent; and

(ii) In the case of notification by mail, the waiting period shall begin to run on the third day following the date that the notification was mailed.

(2) TRS providers using the opt-out mechanism shall provide notices to their customers every two years.

(3) TRS providers that use email to provide opt-out notices shall comply with the following requirements in addition to the requirements generally applicable to notification:

(i) TRS providers shall obtain express, verifiable, prior approval from consumers to send notices via email regarding their service in general, or CPNI in particular;

(ii) TRS providers shall either:

(A) Allow customers to reply directly to the email containing the CPNI notice in order to opt-out; or

(B) Include within the email containing the CPNI notice a conspicuous link to a Web page that provides to the customer a readily usable opt-out mechanism;

(iii) Opt-out email notices that are returned to the TRS provider as undeliverable shall be sent to the customer in another form before the TRS provider may consider the customer to have received notice;

(iv) TRS providers that use email to send CPNI notices shall ensure that the subject line of the message clearly and accurately identifies the subject matter of the email; and

(v) TRS providers shall make available to every customer a method to opt-out that is of no additional cost to the customer and that is available 24 hours a day, seven days a week. TRS providers may satisfy this requirement through a combination of methods, so long as all customers have the ability to opt-out at no cost and are able to effectuate that choice whenever they choose.

(e) *Notice requirements specific to opt-in.* A TRS provider may provide notification to obtain opt-in approval through oral, sign language, written, or electronic methods. The contents of any such notification shall comply with the requirements of paragraph (c) of this section.

(f) *Notice requirements specific to one-time use of CPNI.* (1) TRS providers may use oral, text, or sign language notice to obtain limited, one-time use of CPNI for inbound and outbound customer telephone, TRS, or point-to-point contacts for the duration of the call, regardless of whether TRS providers use opt-out or opt-in approval based on the nature of the contact.

(2) The contents of any such notification shall comply with the requirements of paragraph (c) of this section, except that TRS providers may omit any of the following notice provisions if not relevant to the limited use for which the TRS provider seeks CPNI:

(i) TRS providers need not advise customers that if they have opted-out previously, no action is needed to maintain the opt-out election;

(ii) TRS providers need not advise customers that the TRS provider may share CPNI with the TRS provider's affiliates or third parties and need not name those entities, if the limited CPNI usage will not result in use by, or disclosure to, an affiliate or third party;

(iii) TRS providers need not disclose the means by which a customer can deny or withdraw future access to CPNI, so long as the TRS provider explains to customers that the scope of the approval the TRS provider seeks is limited to one-time use; and

(iv) TRS providers may omit disclosure of the precise steps a customer must take in order to grant or deny access to CPNI, as long as the TRS provider clearly communicates that the customer can deny access to his or her CPNI for the call.

EFFECTIVE DATE NOTE: At 78 FR 40613, July 5, 2013, § 64.5108 was added. This section contain information collection and recordkeeping requirements and will not become effective until approval has been given by the Office of Management and Budget.

§ 64.5109 Safeguards required for use of customer proprietary network information.

(a) TRS providers shall implement a system by which the status of a customer's CPNI approval can be clearly established prior to the use of CPNI. Except as provided for in §§ 64.5105 and 64.5108(f) of this subpart, TRS providers shall provide access to and shall require all personnel, including any agents, contractors, and subcontractors, who have contact with customers to verify the status of a customer's CPNI approval before using, disclosing, or permitting access to the customer's CPNI.

(b) TRS providers shall train their personnel, including any agents, contractors, and subcontractors, as to when they are and are not authorized to use CPNI, including procedures for verification of the status of a customer's CPNI approval. TRS providers shall have an express disciplinary process in place, including in the case of agents, contractors, and subcontractors, a right to cancel the applicable contract(s) or otherwise take disciplinary action.

(c) TRS providers shall maintain a record, electronically or in some other manner, of their own and their affiliates' sales and marketing campaigns that use their customers' CPNI. All TRS providers shall maintain a record of all instances where CPNI was disclosed or provided to third parties, or where third parties were allowed access to CPNI. The record shall include a description of each campaign, the specific CPNI that was used in the campaign, including the customer's name, and what products and services were offered as a part of the campaign. TRS providers shall retain the record for a minimum of three years.

(d) TRS providers shall establish a supervisory review process regarding TRS provider compliance with the rules in this subpart for outbound marketing situations and maintain records of TRS provider compliance for a minimum period of three years. Sales personnel must obtain supervisory approval of any proposed outbound marketing request for customer approval.

(e) A TRS provider shall have an officer, as an agent of the TRS provider,

sign and file with the Commission a compliance certification on an annual basis. The officer shall state in the certification that he or she has personal knowledge that the company has established operating procedures that are adequate to ensure compliance with the rules in this subpart. The TRS provider must provide a statement accompanying the certification explaining how its operating procedures ensure that it is or is not in compliance with the rules in this subpart. In addition, the TRS provider must include an explanation of any actions taken against data brokers, a summary of all customer complaints received in the past year concerning the unauthorized release of CPNI, and a report detailing all instances where the TRS provider, or its agents, contractors, or subcontractors, used, disclosed, or permitted access to CPNI without complying with the procedures specified in this subpart. In the case of iTRS providers, this filing shall be included in the annual report filed with the Commission pursuant to § 64.606(g) of this part for data pertaining to the previous year. In the case of all other TRS providers, this filing shall be made annually with the Disability Rights Office of the Consumer and Governmental Affairs Bureau on or before March 1 in CG Docket No. 03–123 for data pertaining to the previous calendar year.

(f) TRS providers shall provide written notice within five business days to the Disability Rights Office of the Consumer and Governmental Affairs Bureau of the Commission of any instance where the opt-out mechanisms do not work properly, to such a degree that consumers' inability to opt-out is more than an anomaly.

(1) The notice shall be in the form of a letter, and shall include the TRS provider's name, a description of the opt-out mechanism(s) used, the problem(s) experienced, the remedy proposed and when it will be/was implemented, whether the relevant state commission(s) has been notified, if applicable, and whether the state commission(s) has taken any action, a copy of the notice provided to customers, and contact information.

(2) Such notice shall be submitted even if the TRS provider offers other methods by which consumers may opt-out.

EFFECTIVE DATE NOTE: At 78 FR 40613, July 5, 2013, § 64.5109 was added. This section contain information collection and recordkeeping requirements and will not become effective until approval has been given by the Office of Management and Budget.

§ 64.5110 Safeguards on the disclosure of customer proprietary network information.

(a) *Safeguarding CPNI.* TRS providers shall take all reasonable measures to discover and protect against attempts to gain unauthorized access to CPNI. TRS providers shall authenticate a customer prior to disclosing CPNI based on a customer-initiated telephone contact, TRS call, point-to-point call, online account access, or an in-store visit.

(b) *Telephone, TRS, and point-to-point access to CPNI.* A TRS provider shall authenticate a customer without the use of readily available biographical information, or account information, prior to allowing the customer telephonic, TRS, or point-to-point access to CPNI related to his or her TRS account. Alternatively, the customer may obtain telephonic, TRS, or point-to-point access to CPNI related to his or her TRS account through a password, as described in paragraph (e) of this section.

(c) *Online access to CPNI.* A TRS provider shall authenticate a customer without the use of readily available biographical information, or account information, prior to allowing the customer online access to CPNI related to his or her TRS account. Once authenticated, the customer may only obtain online access to CPNI related to his or her TRS account through a password, as described in paragraph (e) of this section.

(d) *In-store access to CPNI.* A TRS provider may disclose CPNI to a customer who, at a TRS provider's retail location, first presents to the TRS provider or its agent a valid photo ID matching the customer's account information.

(e) *Establishment of a password and back-up authentication methods for lost or forgotten passwords.* To establish a password, a TRS provider shall authenticate the customer without the use of

readily available biographical information, or account information. TRS providers may create a back-up customer authentication method in the event of a lost or forgotten password, but such back-up customer authentication method may not prompt the customer for readily available biographical information, or account information. If a customer cannot provide the correct password or the correct response for the back-up customer authentication method, the customer shall establish a new password as described in this paragraph.

(f) *Notification of account changes.* TRS providers shall notify customers immediately whenever a password, customer response to a back-up means of authentication for lost or forgotten passwords, online account, or address of record is created or changed. This notification is not required when the customer initiates service, including the selection of a password at service initiation. This notification may be through a TRS provider-originated voicemail, text message, or video mail to the telephone number of record, by mail to the physical address of record, or by email to the email address of record, and shall not reveal the changed information or be sent to the new account information.

EFFECTIVE DATE NOTE: At 78 FR 40613, July 5, 2013, § 64.5110 was added. This section contain information collection and recordkeeping requirements and will not become effective until approval has been given by the Office of Management and Budget.

§ 64.5111 Notification of customer proprietary network information security breaches.

(a) A TRS provider shall notify law enforcement of a breach of its customers' CPNI as provided in this section. The TRS provider shall not notify its customers or disclose the breach publicly, whether voluntarily or under state or local law or these rules, until it has completed the process of notifying law enforcement pursuant to paragraph (b) of this section. The TRS provider shall file a copy of the notification with the Disability Rights Office of the Consumer and Governmental Affairs Bureau at the same time as when the TRS provider notifies the customers.

(b) As soon as practicable, and in no event later than seven (7) business days, after reasonable determination of the breach, the TRS provider shall electronically notify the United States Secret Service (USSS) and the Federal Bureau of Investigation (FBI) through a central reporting facility. The Commission will maintain a link to the reporting facility at *http://www.fcc.gov/eb/cpni*.

(1) Notwithstanding any state law to the contrary, the TRS provider shall not notify customers or disclose the breach to the public until 7 full business days have passed after notification to the USSS and the FBI except as provided in paragraphs (b)(2) and (3) of this section.

(2) If the TRS provider believes that there is an extraordinarily urgent need to notify any class of affected customers sooner than otherwise allowed under paragraph (b)(1) of this section, in order to avoid immediate and irreparable harm, it shall so indicate in its notification and may proceed to immediately notify its affected customers only after consultation with the relevant investigating agency. The TRS provider shall cooperate with the relevant investigating agency's request to minimize any adverse effects of such customer notification.

(3) If the relevant investigating agency determines that public disclosure or notice to customers would impede or compromise an ongoing or potential criminal investigation or national security, such agency may direct the TRS provider not to so disclose or notify for an initial period of up to 30 days. Such period may be extended by the agency as reasonably necessary in the judgment of the agency. If such direction is given, the agency shall notify the TRS provider when it appears that public disclosure or notice to affected customers will no longer impede or compromise a criminal investigation or national security. The agency shall provide in writing its initial direction to the TRS provider, any subsequent extension, and any notification that notice will no longer impede or compromise a criminal investigation or national security and such writings

shall be contemporaneously logged on the same reporting facility that contains records of notifications filed by TRS providers.

(c) *Customer notification*. After a TRS provider has completed the process of notifying law enforcement pursuant to paragraph (b) of this section, and consistent with the waiting requirements specified in paragraph (b) of this section, the TRS provider shall notify its customers of a breach of those customers' CPNI.

(d) *Recordkeeping*. All TRS providers shall maintain a record, electronically or in some other manner, of any breaches discovered, notifications made to the USSS and the FBI pursuant to paragraph (b) of this section, and notifications made to customers. The record must include, if available, dates of discovery and notification, a detailed description of the CPNI that was the subject of the breach, and the circumstances of the breach. TRS providers shall retain the record for a minimum of 2 years.

(e) *Definition*. As used in this section, a ''breach'' has occurred when a person, without authorization or exceeding authorization, has intentionally gained access to, used, or disclosed CPNI.

(f) This section does not supersede any statute, regulation, order, or interpretation in any State, except to the extent that such statute, regulation, order, or interpretation is inconsistent with the provisions of this section, and then only to the extent of the inconsistency.

EFFECTIVE DATE NOTE: At 78 FR 40613, July 5, 2013, § 64.5111 was added. This section contain information collection and recordkeeping requirements and will not become effective until approval has been given by the Office of Management and Budget.

Subpart FF—Inmate Calling Services

SOURCE: 78 FR 67975, Nov. 13, 2013, unless otherwise noted.

§ 64.6000 Definitions.

As used in this subpart:

Ancillary charges mean any charges to Consumers not included in the charges assessed for individual calls and that Consumers may be assessed for the use of Inmate Calling Services. Ancillary Charges include, but are not limited to, fees to create, maintain, or close an account with a Provider; fees in connection with account balances, including fees to add money to an account; and fees for obtaining refunds of outstanding funds in an account;

Collect calling means a calling arrangement whereby the called party agrees to pay for charges associated with an Inmate Calling Services call originating from an Inmate Telephone;

Consumer means the party paying a Provider of Inmate Calling Services;

Debit calling means a calling arrangement that allows a Consumer to pay for Inmate Calling Services from an existing or established account;

Inmate means a person detained at a correctional institution, regardless of the duration of the detention;

Inmate calling services means the offering of interstate calling capabilities from an Inmate Telephone;

Inmate telephone means a telephone instrument or other device capable of initiating telephone calls set aside by authorities of a correctional institution for use by Inmates;

Prepaid calling means a calling arrangement that allows Consumers to pay in advance for a specified amount of Inmate Calling Services;

Prepaid collect calling means a calling arrangement that allows an Inmate to initiate an Inmate Calling Services call without having a pre-established billing arrangement and also provides a means, within that call, for the called party to establish an arrangement to be billed directly by the Provider of Inmate Calling Services for future calls from the same Inmate;

Provider of Inmate Calling Services, or Provider, means any communications service provider that provides Inmate Calling Services, regardless of the technology used.

§ 64.6010 Cost-based rates for inmate calling services.

All rates charged for Inmate Calling Services and all Ancillary Charges must be based only on costs that are reasonably and directly related to the provision of ICS.

§ 64.6020 Interim safe harbor.

(a) A Provider's rates are presumptively in compliance with § 64.6010 (subject to rebuttal) if:

(1) None of the Provider's rates for Collect Calling exceed $0.14 per minute at any correctional institution, and

(2) None of the Provider's rates for Debit Calling, Prepaid Calling, or Prepaid Collect Calling exceed $0.12 per minute at any correctional institution.

(b) A Provider's rates shall be considered consistent with paragraph (a) of this section if the total charge for a 15-minute call, including any per-call or per-connection charges, does not exceed the appropriate rate in paragraph (a)(1) or (2) of this section for a 15-minute call.

(c) A Provider's rates that are consistent with paragraph (a) of this section will be treated as lawful unless and until the Commission or the Wireline Competition Bureau, acting under delegated authority, issues a decision finding otherwise.

§ 64.6030 Inmate calling services interim rate cap.

No provider shall charge a rate for Collect Calling in excess of $0.25 per minute, or a rate for Debit Calling, Prepaid Calling, or Prepaid Collect Calling in excess of $0.21 per minute. A Provider's rates shall be considered consistent with this section if the total charge for a 15-minute call, including any per-call or per-connection charges, does not exceed $3.75 for a 15-minute call using Collect Calling, or $3.15 for a 15-minute call using Debit Calling, Prepaid Calling, or Prepaid Collect Calling.

§ 64.6040 Rates for Telecommunications Relay Service (TRS) calling.

No Provider shall levy or collect any charge in addition to or in excess of the rates for Inmate Calling Services or charges for Ancillary Charges for any form of TRS call.

§ 64.6050 Billing-related call blocking.

No Provider shall prohibit or prevent completion of a Collect Calling call or decline to establish or otherwise degrade Collect Calling solely for the reason that it lacks a billing relationship with the called party's communications service provider unless the Provider offers Debit Calling, Prepaid Calling, or Prepaid Collect Calling.

§ 64.6060 Annual reporting and certification requirement.

(a) All Providers must submit a report to the Commission, by April 1st of each year, regarding their interstate and intrastate Inmate Calling Services for the prior calendar year. The report shall contain:

(1) The following information broken out by correctional institution; by jurisdictional nature to the extent that there are differences among interstate, intrastate, and local calls; and by the nature of the billing arrangement to the extent there are differences among Collect Calling, Debit Calling, Prepaid Calling, Prepaid Collect Calling, or any other type of billing arrangement:

(i) Rates for Inmate Calling Services, reporting separately per-minute rates and per-call or per-connection charges;

(ii) Ancillary charges;

(iii) Minutes of use;

(iv) The average duration of calls;

(v) The percentage of calls disconnected by the Provider for reasons other than expiration of time;

(vi) The number of calls disconnected by the Provider for reasons other than expiration of time;

(2) A certification that the Provider was in compliance during the entire prior calendar year with the rates for Telecommunications Relay Service as required by § 64.6040;

(3) A certification that the Provider was in compliance during the entire prior calendar year with the requirement that all rates and charges be cost-based as required by § 64.6010, including Ancillary Charges.

(b) An officer or director from each Provider must certify that the reported information and data are accurate and complete to the best of his or her knowledge, information, and belief.

APPENDIX A TO PART 64—TELECOMMUNICATIONS SERVICE PRIORITY (TSP) SYSTEM FOR NATIONAL SECURITY EMERGENCY PREPAREDNESS (NSEP)

1. Purpose and Authority

a. This appendix establishes policies and procedures and assigns responsibilities for

the National Security Emergency Preparedness (NSEP) Telecommunications Service Priority (TSP) System. The NSEP TSP System authorizes priority treatment to certain domestic telecommunications services (including portions of U.S. international telecommunication services provided by U.S. service vendors) for which provisioning or restoration priority (RP) levels are requested, assigned, and approved in accordance with this appendix.

b. This appendix is issued pursuant to sections 1, 4(i), 201 through 205 and 303(r) of the Communications Act of 1934, as amended, 47 U.S.C. 151, 154(i), 201 through 205 and 303(r). These sections grant to the Federal Communications Commission (FCC) the authority over the assignment and approval of priorities for provisioning and restoration of common carrier-provided telecommunications services. Under section 706 of the Communications Act, this authority may be superseded, and expanded to include non-common carrier telecommunication services, by the war emergency powers of the President of the United States. This appendix provides the Commission's Order to telecommunication service vendors and users to comply with policies and procedures establishing the NSEP TSP System, until such policies and procedures are superseded by the President's war emergency powers. This appendix is intended to be read in conjunction with regulations and procedures that the Executive Office of the President issues (1) to implement responsibilities assigned in section 6(b) of this appendix, or (2) for use in the event this appendix is superseded by the President's war emergency powers.

c. Together, this appendix and the regulations and procedures issued by the Executive Office of the President establish one uniform system of priorities for provisioning and restoration of NSEP telecommunication services both before and after invocation of the President's war emergency powers. In order that government and industry resources may be used effectively under all conditions, a single set of rules, regulations, and procedures is necessary, and they must be applied on a day-to-day basis to all NSEP services so that the priorities they establish can be implemented at once when the need arises.

*In sections 2(a)(2) and 2(b)(2) of Executive Order No. 12472, ''Assignment of National Security and Emergency Preparedness Telecommunications Functions'' April 3, 1984 (49 FR 13471 (1984)), the President assigned to the Director, Office of Science and Technology Policy, certain NSEP telecommunication resource management responsibilities. The term ''Executive Office of the President'' as used in this appendix refers to the official or organization designated by the President to act on his behalf.

2. Applicability and Revocation

a. This appendix applies to NSEP telecommunications services:

(1) For which initial or revised priority level assignments are requested pursuant to section 8 of this appendix.

(2) Which were assigned restoration priorities under the provision of FCC Order 80–581; 81 FCC 2d 441 (1980); 47 CFR part 64, appendix A, ''Priority System for the Restoration of Common Carrier Provided Intercity Private Line Services''; and are being resubmitted for priority level assignments pursuant to section 10 of this appendix. (Such services will retain assigned restoration priorities until a resubmission for a TSP assignment is completed or until the existing RP rules are terminated.)

b. FCC Order 80–581 will continue to apply to all other intercity, private line circuits assigned restoration priorities thereunder until the fully operating capability date of this appendix, 30 months after the initial operating capability date referred to in subsection d of this section.

c. In addition, FCC Order, ''Precedence System for Public Correspondence Services Provided by the Communications Common Carriers'' (34 FR 17292 (1969)); (47 CFR part 64, appendix B), is revoked as of the effective date of this appendix.

d. The initial operating capability (IOC) date for NSEP TSP will be nine months after release in the FEDERAL REGISTER of the FCC's order following review of procedures submitted by the Executive Office of the President. On this IOC date requests for priority assignments generally will be accepted only by the Executive Office of the President.

3. Definitions

As used in this part:

a. *Assignment* means the designation of priority level(s) for a defined NSEP telecommunications service for a specified time period.

b. *Audit* means a quality assurance review in response to identified problems.

c. *Government* refers to the Federal government or any foreign, state, county, municipal or other local government agency or organization. Specific qualifications will be supplied whenever reference to a particular level of government is intended (e.g., ''Federal government'', ''state government''). ''Foreign government'' means any sovereign empire, kingdom, state, or independent political community, including foreign diplomatic and consular establishments and coalitions or associations of governments (e.g., North Atlantic Treaty Organization (NATO), Southeast Asian Treaty Organization (SEATO), Organization of American States

(OAS), and government agencies or organization (e.g., Pan American Union, International Postal Union, and International Monetary Fund)).

d. *National Communications System (NCS)* refers to that organization established by the President in Executive Order No. 12472, ''Assignment of National Security and Emergency Preparedness Telecommunications Functions,'' April 3, 1984, 49 FR 13471 (1984).

e. *National Coordinating Center (NCC)* refers to the joint telecommunications industry-Federal government operation established by the National Communications System to assist in the initiation, coordination, restoration, and reconstitution of NSEP telecommunication services or facilities.

f. *National Security Emergency Preparedness (NSEP)* telecommunications services, or ''NSEP services,'' means telecommunication services which are used to maintain a state of readiness or to respond to and manage any event or crisis (local, national, or international), which causes or could cause injury or harm to the population, damage to or loss of property, or degrades or threatens the NSEP posture of the United States. These services fall into two specific categories, Emergency NSEP and Essential NSEP, and are assigned priority levels pursuant to section 9 of this appendix.

g. *NSEP treatment* refers to the provisioning of a telecommunication service before others based on the provisioning priority level assigned by the Executive Office of the President.

h. *Priority action* means assignment, revision, revocation, or revalidation by the Executive Office of the President of a priority level associated with an NSEP telecommunications service.

i. *Priority level* means the level that may be assigned to an NSEP telecommunications service specifying the order in which provisioning or restoration of the service is to occur relative to other NSEP and/or non-NSEP telecommunication services. Priority levels authorized by this appendix are designated (highest to lowest) ''E,'' ''1,'' ''2,'' ''3,'' ''4,'' and ''5,'' for provisioning and ''1,'' ''2,'' ''3,'' ''4,'' and ''5,'' for restoration.

j. *Priority level assignment* means the priority level(s) designated for the provisioning and/or restoration of a particular NSEP telecommunications service under section 9 of this appendix.

k. *Private NSEP telecommunications services* include non-common carrier telecommunications services including private line, virtual private line, and private switched network services.

l. *Provisioning* means the act of supplying telecommunications service to a user, including all associated transmission, wiring and equipment. As used herein, ''provisioning'' and ''initiation'' are synonymous and include altering the state of an existing priority service or capability.

m. *Public switched NSEP telecommunications services* include those NSEP telecommunications services utilizing public switched networks. Such services may include both interexchange and intraexchange network facilities (e.g., switching systems, interoffice trunks and subscriber loops).

n. *Reconciliation* means the comparison of NSEP service information and the resolution of identified discrepancies.

o. *Restoration* means the repair or returning to service of one or more telecommunication services that have experienced a service outage or are unusable for any reason, including a damaged or impaired telecommunications facility. Such repair or returning to service may be done by patching, rerouting, substitution of component parts or pathways, and other means, as determined necessary by a service vendor.

p. *Revalidation* means the rejustification by a service user of a priority level assignment. This may result in extension by the Executive Office of the President of the expiration date associated with the priority level assignment.

q. *Revision* means the change of priority level assignment for an NSEP telecommunications service. This includes any extension of an existing priority level assignment to an expanded NSEP service.

r. *Revocation* means the elimination of a priority level assignment when it is no longer valid. All priority level assignments for an NSEP service are revoked upon service termination.

s. *Service identification* refers to the information uniquely identifying an NSEP telecommunications service to the service vendor and/or service user.

t. *Service user* refers to any individual or organization (including a service vendor) supported by a telecommunications service for which a priority level has been requested or assigned pursuant to section 8 or 9 of this appendix.

u. *Service vendor* refers to any person, association, partnership, corporation, organization, or other entity (including common carriers and government organizations) that offers to supply any telecommunications equipment, facilities, or services (including customer premises equipment and wiring) or combination thereof. The term includes resale carriers, prime contractors, subcontractors, and interconnecting carriers.

v. *Spare circuits or services* refers to those not being used or contracted for by any customer.

w. *Telecommunication services* means the transmission, emission, or reception of signals, signs, writing, images, sounds, or intelligence of any nature, by wire, cable, satellite, fiber optics, laser, radio, visual or other electronic, electric, electromagnetic,

or acoustically coupled means, or any combination thereof. The term can include necessary telecommunication facilities.

x. *Telecommunications Service Priority (TSP) system user* refers to any individual, organization, or activity that interacts with the NSEP TSP System.

4. Scope

a. *Domestic NSEP services*. The NSEP TSP System and procedures established by this appendix authorize priority treatment to the following domestic telecommunication services (including portions of U.S. international telecommunication services provided by U.S. vendors) for which provisioning or restoration priority levels are requested, assigned, and approved in accordance with this appendix:

(1) Common carrier services which are:

(a) Interstate or foreign telecommunications services,

(b) Intrastate telecommunication services inseparable from interstate or foreign telecommunications services, and intrastate telecommunication services to which priority levels are assigned pursuant to section 9 of this appendix.

NOTE: Initially, the NSEP TSP System's applicability to public switched services is limited to (a) provisioning of such services (e.g., business, centrex, cellular, foreign exchange, Wide Area Telephone Service (WATS) and other services that the selected vendor is able to provision) and (b) restoration of services that the selected vendor is able to restore.

(2) Services which are provided by government and/or non-common carriers and are interconnected to common carrier services assigned a priority level pursuant to section 9 of this appendix.

b. *Control services and orderwires*. The NSEP TSP System and procedures established by this appendix are not applicable to authorize priority treatment to control services or orderwires owned by a service vendor and needed for provisioning, restoration, or maintenance of other services owned by that service vendor. Such control services and orderwires shall have priority provisioning and restoration over all other telecommunication services (including NSEP services) and shall be exempt from preemption. However, the NSEP TSP System and procedures established by this appendix are applicable to control services or orderwires leased by a service vendor.

c. *Other services*. The NSEP TSP System may apply, at the discretion of and upon special arrangements by the NSEP TSP System users involved, to authorize priority treatment to the following telecommunication services:

(1) Government or non-common carrier services which are not connected to common carrier provided services assigned a priority level pursuant to section 9 of this appendix.

(2) Portions of U.S. international services which are provided by foreign correspondents. (U.S. telecommunication service vendors are encouraged to ensure that relevant operating arrangements are consistent to the maximum extent practicable with the NSEP TSP System. If such arrangements do not exist, U.S. telecommunication service vendors should handle service provisioning and/or restoration in accordance with any system acceptable to their foreign correspondents which comes closest to meeting the procedures established in this appendix.)

5. Policy

The NSEP TSP System is the regulatory, administrative, and operational system authorizing and providing for priority treatment, *i.e.*, provisioning and restoration, of NSEP telecommunication services. As such, it establishes the framework for telecommunication service vendors to provision, restore, or otherwise act on a priority basis to ensure effective NSEP telecommunication services. The NSEP TSP System allows the assignment of priority levels to any NSEP service across three time periods, or stress conditions: Peacetime/Crisis/Mobilizations, Attack/War, and Post-Attack/Recovery. Although priority levels normally will be assigned by the Executive Office of the President and retained by service vendors only for the current time period, they may be preassigned for the other two time periods at the request of service users who are able to identify and justify in advance, their wartime or post-attack NSEP telecommunication requirements. Absent such preassigned priority levels for the Attack/War and Post-Attack/Recovery periods, priority level assignments for the Peacetime/Crisis/Mobilization period will remain in effect. At all times, priority level assignments will be subject to revision by the FCC or (on an interim basis) the Executive Office of the President, based upon changing NSEP needs. No other system of telecommunication service priorities which conflicts with the NSEP TSP System is authorized.

6. Responsibilities

a. The FCC will:

(1) Provide regulatory oversight of implementation of the NSEP TSP System.

(2) Enforce NSEP TSP System rules and regulations, which are contained in this appendix.

(3) Act as final authority for approval, revision, or disapproval of priority actions by the Executive Office of the President and adjudicate disputes regarding either priority actions or denials of requests for priority actions by the Executive Office of the President, until superseded by the President's war

emergency powers under section 706 of the Communications Act.

(4) Function (on a discretionary basis) as a sponsoring Federal organization. (See section 6(c) below.)

b. The Executive Office of the President will:

(1) During exercise of the President's war emergency powers under section 706 of the Communications Act, act as the final approval authority for priority actions or denials of requests for priority actions, adjudicating any disputes.

(2) Until the exercise of the President's war emergency powers, administer the NSEP TSP System which includes:

(a) Receiving, processing, and evaluating requests for priority actions from service users, or sponsoring Federal government organizations on behalf of service users (e.g., Department of State or Defense on behalf of foreign governments, Federal Emergency Management Agency on behalf of state and local governments, and any Federal organization on behalf of private industry entities). Action on such requests will be completed within 30 days of receipt.

(b) Assigning, revising, revalidating, or revoking priority levels as necessary or upon request of service users concerned, and denying requests for priority actions as necessary, using the categories and criteria specified in section 12 of this appendix. Action on such requests will be completed within 30 days of receipt.

(c) Maintaining data on priority level assignments.

(d) Periodically forwarding to the FCC lists of priority actions by the Executive Office of the President for review and approval.

(e) Periodically initiating reconciliation.

(f) Testing and evaluating the NSEP TSP System for effectiveness.

(g) Conducting audits as necessary. Any Telecommunications Service Priority (TSP) System user may request the Executive Office of the President to conduct an audit.

(h) Issuing, subject to review by the FCC, regulations and procedures supplemental to and consistent with this appendix regarding operation and use of the NSEP TSP System.

(i) Serving as a centralized point-of-contact for collecting and disseminating to all interested parties (consistent with requirements for treatment of classified and proprietary material) information concerning use and abuse of the NSEP TSP System.

(j) Establishing and assisting a TSP System Oversight Committee to identify and review any problems developing in the system and recommend actions to correct them or prevent recurrence. In addition to representatives of the Executive Office of the President, representatives from private industry (including telecommunication service vendors), state and local governments, the FCC, and other organizations may be appointed to that Committee.

(k) Reporting at least quarterly to the FCC and TSP System Oversight Committee, together with any recommendations for action, the operational status of and trends in the NSEP TSP System, including:

(i) Numbers of requests processed for the various priority actions, and the priority levels assigned.

(ii) Relative percentages of services assigned to each priority level under each NSEP category and subcategory.

(iii) Any apparent serious misassignment or abuse of priority level assignments.

(iv) Any existing or developing problem.

(l) Submitting semi-annually to the FCC and TSP System Oversight Committee a summary report identifying the time and event associated with each invocation of NSEP treatment under section 9(c) of this appendix, whether the NSEP service requirement was adequately handled, and whether any additional charges were incurred. These reports will be due by April 30th for the preceding July through December and by October 31 for the preceding January through June time periods.

(m) All reports submitted to the FCC should be directed to Chief, Public Safety and Homeland Security Bureau, Washington, DC 20554.

(3) Function (on a discretionary basis) as a sponsoring Federal organization. (See section 6(c) below.)

c. Sponsoring Federal organizations will:

(1) Review and decide whether to sponsor foreign, state, and local government and private industry (including telecommunication service vendors) requests for priority actions. Federal organizations will forward sponsored requests with recommendations for disposition to the Executive Office of the President. Recommendations will be based on the categories and criteria in section 12 of this appendix.

(2) Forward notification of priority actions or denials of requests for priority actions from the Executive Office of the President to the requesting foreign, state, and local government and private industry entities.

(3) Cooperate with the Executive Office of the President during reconciliation, revalidation, and audits.

(4) Comply with any regulations and procedures supplemental to and consistent with this appendix which are issued by the Executive Office of the President.

d. Service users will:

(1) Identify services requiring priority level assignments and request and justify priority level assignments in accordance with this appendix and any supplemental regulations and procedures issued by the Executive Office of the President that are consistent with this appendix.

(2) Request and justify revalidation of all priority level assignments at least every three years.

(3) For services assigned priority levels, ensure (through contractual means or otherwise) availability of customer premises equipment and wiring necessary for end-to-end service operation by the service due date, and continued operation; and, for such services in the Emergency NSEP category, by the time that vendors are prepared to provide the services. Additionally, designate the organization responsible for the service on an end-to-end basis.

(4) Be prepared to accept services assigned priority levels by the service due dates or, for services in the Emergency NSEP category, when they are available.

(5) Pay vendors any authorized costs associated with services that are assigned priority levels.

(6) Report to vendors any failed or unusable services that are assigned priority levels.

(7) Designate a 24-hour point-of-contact for matters concerning each request for priority action and apprise the Executive Office of the President thereof.

(8) Upon termination of services that are assigned priority levels, or circumstances warranting revisions in priority level assignment (e.g., expansion of service), request and justify revocation or revision.

(9) When NSEP treatment is invoked under section 9(c) of this appendix, within 90 days following provisioning of the service involved, forward to the National Coordinating Center (see section 3(e) of this appendix) complete information identifying the time and event associated with the invocation and regarding whether the NSEP service requirement was adequately handled and whether any additional charges were incurred.

(10) Cooperate with the Executive Office of the President during reconciliation, revalidation, and audits.

(11) Comply with any regulations and procedures supplemental to and consistent with this appendix that are issued by the Executive Office of the President.

e. Non-federal service users, in addition to responsibilities prescribed above in section 6(d), will obtain a sponsoring Federal organization for all requests for priority actions. If unable to find a sponsoring Federal organization, a non-federal service user may submit its request, which must include documentation of attempts made to obtain a sponsor and reasons given by the sponsor for its refusal, directly to the Executive Office of the President.

f. Service vendors will:

(1) When NSEP treatment is invoked by service users, provision NSEP telecommunication services before non-NSEP services, based on priority level assignments made by the Executive Office of the President. Provisioning will require service vendors to:

(a) Allocate resources to ensure best efforts to provide NSEP services by the time required. When limited resources constrain response capability, vendors will address conflicts for resources by:

(i) Providing NSEP services in order of provisioning priority level assignment (i.e., ''E'', ''1'', ''2'', ''3'', ''4'', or ''5'');

(ii) Providing Emergency NSEP services (i.e., those assigned provisioning priority level ''E'') in order of receipt of the service requests;

(iii) Providing Essential NSEP services (i.e., those assigned priority levels ''1'', ''2'', ''3'', ''4'', or ''5'') that have the same provisioning priority level in order of service due dates; and

(iv) Referring any conflicts which cannot be resolved (to the mutual satisfaction of servicer vendors and users) to the Executive Office of the President for resolution.

(b) Comply with NSEP service requests by:

(i) Allocating resources necessary to provide Emergency NSEP services as soon as possible, dispatching outside normal business hours when necessary;

(ii) Ensuring best efforts to meet requested service dates for Essential NSEP services, negotiating a mutually (customer and vendor) acceptable service due date when the requested service due date cannot be met; and

(iii) Seeking National Coordinating Center (NCC) assistance as authorized under the NCC Charter (see section 1.3, NCC Charter, dated October 9, 1985).

(2) Restore NSEP telecommunications services which suffer outage, or are reported as unusable or otherwise in need of restoration, before non-NSEP services, based on restoration priority level assignments. (NOTE: For broadband or multiple service facilities, restoration is permitted even though it might result in restoration of services assigned no or lower priority levels along with, or sometimes ahead of, some higher priority level services.) Restoration will require service vendors to restore NSEP services in order of restoration priority level assignment (i.e., ''1'', ''2'', ''3'', ''4'', or ''5'') by:

(a) Allocating available resources to restore NSEP services as quickly as practicable, dispatching outside normal business hours to restore services assigned priority levels ''1'', ''2'', and ''3'' when necessary, and services assigned priority level ''4'' and ''5'' when the next business day is more than 24 hours away;

(b) Restoring NSEP services assigned the same restoration priority level based upon which can be first restored. (However, restoration actions in progress should not normally be interrupted to restore another NSEP service assigned the same restoration priority level);

(c) Patching and/or rerouting NSEP services assigned restoration priority levels from ''1'' through ''5,'' when use of patching and/or rerouting will hasten restoration;

(d) Seeking National Coordinating Center (NCC) assistance authorized under the NCC Charter; and

(e) Referring any conflicts which cannot be resolved (to the mutual satisfaction of service vendors and users) to the Executive Office of the President for resolution.

(3) Respond to provisioning requests of customers and/or other service vendors, and to restoration priority level assignments when an NSEP service suffers an outage or is reported as unusable, by:

(a) Ensuring that vendor personnel understand their responsibilities to handle NSEP provisioning requests and to restore NSEP service; and

(b) Providing a 24-hour point-of-contact for receiving provisioning requests for Emergency NSEP services and reports of NSEP service outages or unusability.

(c) Seek verification from an authorized entity if legitimacy of a priority level assignment or provisioning request for an NSEP service is in doubt. However, processing of Emergency NSEP service requests will not be delayed for verification purposes.

(4) Cooperate with other service vendors involved in provisioning or restoring a portion of an NSEP service by honoring provisioning or restoration priority level assignments, or requests for assistance to provision or restore NSEP services, as detailed in sections 6(f)(1), (2), and (3) above.

(5) All service vendors, including resale carriers, are required to ensure that service vendors supplying underlying facilities are provided information necessary to implement priority treatment of facilities that support NSEP services.

(6) Preempt, when necessary, existing services to provide an NSEP service as authorized in section 7 of this appendix.

(7) Assist in ensuring that priority level assignments of NSEP services are accurately identified ''end-to-end'' by:

(a) Seeking verification from an authorized Federal government entity if the legitimacy of the restoration priority level assignment is in doubt;

(b) Providing to subcontractors and/or interconnecting carriers the restoration priority level assigned to a service;

(c) Supplying, to the Executive Office of the President, when acting as a prime contractor to a service user, confirmation information regarding NSEP service completion for that portion of the service they have contracted to supply;

(d) Supplying, to the Executive Office of the President, NSEP service information for the purpose of reconciliation.

(e) Cooperating with the Executive Office of the President during reconciliation.

(f) Periodically initiating reconciliation with their subcontractors and arranging for subsequent subcontractors to cooperate in the reconciliation process.

(8) Receive compensation for costs authorized through tariffs or contracts by:

(a) Provisions contained in properly filed state or Federal tariffs; or

(b) Provisions of properly negotiated contracts where the carrier is not required to file tariffs.

(9) Provision or restore only the portions of services for which they have agreed to be responsible (i.e., have contracted to supply), unless the President's war emergency powers under section 706 of the Communications Act are in effect.

(10) Cooperate with the Executive Office of the President during audits.

(11) Comply with any regulations or procedures supplemental to and consistent with this appendix that are issued by the Executive Office of the President and reviewed by the FCC.

(12) Insure that at all times a reasonable number of public switched network services are made available for public use.

(13) Not disclose information concerning NSEP services they provide to those not having a need-to-know or might use the information for competitive advantage.

7. Preemption of Existing Services

When necessary to provision or restore NSEP services, service vendors may preempt services they provide as specified below. ''User'' as used in this Section means any user of a telecommunications service, including both NSEP and non-NSEP services. Prior consent by a preempted user is not required.

a. The sequence in which existing services may be preempted to provision NSEP services assigned a provisioning priority level ''E'' or restore NSEP services assigned a restoration priority level from ''1'' through ''5'':

(1) Non-NSEP services: If suitable spare services are not available, then, based on the considerations in this appendix and the service vendor's best judgment, non-NSEP services will be preempted. After ensuring a sufficient number of public switched services are available for public use, based on the service vendor's best judgment, such services may be used to satisfy a requirement for provisioning or restoring NSEP services.

(2) NSEP services: If no suitable spare or non-NSEP services are available, then existing NSEP services may be preempted to provision or restore NSEP services with higher priority level assignments. When this is necessary, NSEP services will be selected for preemption in the inverse order of priority level assignment.

(3) Service vendors who are preempting services will ensure their best effort to notify the service user of the preempted service

and state the reason for and estimated duration of the preemption.

b. Service vendors may, based on their best judgment, determine the sequence in which existing services may be preempted to provision NSEP services assigned a provisioning priority of ''1'' through ''5''. Preemption is not subject to the consent of the user whose service will be preempted.

8. Requests for Priority Assignments.

All service users are required to submit requests for priority actions through the Executive Office of the President in the format and following the procedures prescribed by that Office.

9. Assignment, Approval, Use, and Invocation of Priority Levels

a. *Assignment and approval of priority levels.* Priority level assignments will be based upon the categories and criteria specified in section 12 of this appendix. A priority level assignment made by the Executive Office of the President will serve as that Office's recommendation to the FCC. Until the President's war emergency powers are invoked, priority level assignments must be approved by the FCC. However, service vendors are ordered to implement any priority level assignments that are pending FCC approval.

After invocation of the President's war emergency powers, these requirements may be superseded by other procedures issued by the Executive Office of the President.

b. *Use of Priority Level Assignments.*

(1) All provisioning and restoration priority level assignments for services in the Emergency NSEP category will be included in initial service orders to vendors. Provisioning priority level assignments for Essential NSEP services, however, will not usually be included in initial service orders to vendors. NSEP treatment for Essential NSEP services will be invoked and provisioning priority level assignments will be conveyed to service vendors only if the vendors cannot meet needed service dates through the normal provisioning process.

(2) Any revision or revocation of either provisioning or restoration priority level assignments will also be transmitted to vendors.

(3) Service vendors shall accept priority levels and/or revisions only after assignment by the Executive Office of the President.

NOTE: Service vendors acting as prime contractors will accept assigned NSEP priority levels only when they are accompanied by the Executive Office of the President designated service identification, *i.e.*, TSP Authorization Code. However, service vendors are authorized to accept priority levels and/or revisions from users and contracting activities before assignment by the Executive Office of the President when service vendor, user, and contracting activities are unable to communicate with either the Executive Office of the President or the FCC. Processing of Emergency NSEP service requests will not be delayed for verification purposes.

c. *Invocation of NSEP treatment.* To invoke NSEP treatment for the priority provisioning of an NSEP telecommunications service, an authorized Federal official either within, or acting on behalf of, the service user's organization must make a written or oral declaration to concerned service vendor(s) and the Executive Office of the President that NSEP treatment is being invoked. Authorized Federal officials include the head or director of a Federal agency, commander of a unified/specified military command, chief of a military service, or commander of a major military command; the delegates of any of the foregoing; or any other officials as specified in supplemental regulations or procedures issued by the Executive Office of the President. The authority to invoke NSEP treatment may be delegated only to a general or flag officer of a military service, civilian employee of equivalent grade (e.g., Senior Executive Service member), Federal Coordinating Officer or Federal Emergency Communications Coordinator/Manager, or any other such officials specified in supplemental regulations or procedures issued by the Executive Office of the President. Delegates must be designated as such in writing, and written or oral invocations must be accomplished, in accordance with supplemental regulations or procedures issued by the Executive Office of the President.

10. Resubmission of Circuits Presently Assigned Restoration Priorities

All circuits assigned restoration priorities must be reviewed for eligibility for initial restoration priority level assignment under the provisions of this appendix. Circuits currently assigned restoration priorities, and for which restoration priority level assignments are requested under section 8 of this appendix, will be resubmitted to the Executive Office of the President. To resubmit such circuits, service users will comply with applicable provisions of section 6(d) of this appendix.

11. Appeal

Service users or sponsoring Federal organizations may appeal any priority level assignment, denial, revision, revocation, approval, or disapproval to the Executive Office of the President within 30 days of notification to the service user. The appellant must use the form or format required by the Executive Office of the President and must serve the FCC with a copy of its appeal. The Executive Office of the President will act on the appeal within 90 days of receipt. Service users and sponsoring Federal organizations may only

then appeal directly to the FCC. Such FCC appeal must be filed within 30 days of notification of the Executive Office of the President's decision on appeal. Additionally, the Executive Office of the President may appeal any FCC revisions, approvals, or disapprovals to the FCC. All appeals to the FCC must be submitted using the form or format required. The party filing its appeal with the FCC must include factual details supporting its claim and must serve a copy on the Executive Office of the President and any other party directly involved. Such party may file a response within 20 days, and replies may be filed within 10 days thereafter. The Commission will not issue public notices of such submissions. The Commission will provide notice of its decision to the parties of record. Any appeals to the Executive Office of the President that include a claim of new information that has not been presented before for consideration may be submitted at any time.

12. NSEP TSP System Categories, Criteria, and Priority Levels

a. *General.* NSEP TSP System categories and criteria, and permissible priority level assignments, are defined and explained below.

(1) The Essential NSEP category has four subcategories: National Security Leadership; National Security Posture and U.S. Population Attack Warning; Public Health, Safety, and Maintenance of Law and Order; and Public Welfare and Maintenance of National Economic Posture. Each subcategory has its own criteria. Criteria are also shown for the Emergency NSEP category, which has no sub-categories.

(2) Priority levels of ''1,'' ''2,'' ''3,'' ''4,'' and ''5'' may be assigned for provisioning and/or restoration of Essential NSEP telecommunication services. However, for Emergency NSEP telecommunications services, a priority level ''E'' is assigned for provisioning. A restoration priority level from ''1'' through ''5'' may be assigned if an Emergency NSEP service also qualifies for such a restoration priority level under the Essential NSEP category.

(3) The NSEP TSP System allows the assignment of priority levels to any NSEP telecommunications service across three time periods, or stress conditions: Peacetime/Crisis/Mobilization, Attack/War, and Post-Attack/Recovery. Priority levels will normally be assigned only for the first time period. These assigned priority levels will apply through the onset of any attack, but it is expected that they would later be revised by surviving authorized telecommunication resource managers within the Executive Office of the President based upon specific facts and circumstances arising during the Attack/War and Post-Attack/Recovery time periods.

(4) Service users may, for their own internal use, assign subpriorities to their services assigned priority levels. Receipt of and response to any such subpriorities is optional for service vendors.

(5) The following paragraphs provide a detailed explanation of the categories, subcategories, criteria, and priority level assignments, beginning with the Emergency NSEP category.

b. *Emergency NSEP.* Telecommunications services in the Emergency NSEP category are those new services so critical as to be required to be provisioned at the earliest possible time, without regard to the costs of obtaining them.

(1) *Criteria.* To qualify under the Emergency NSEP category, the service must meet criteria directly supporting or resulting from at least one of the following NSEP functions:

(a) Federal government activity responding to a Presidentially declared disaster or emergency as defined in the Disaster Relief Act (42 U.S.C. 5122).

(b) State or local government activity responding to a Presidentially declared disaster or emergency.

(c) Response to a state of crisis declared by the National Command Authorities (e.g., exercise of Presidential war emergency powers under section 706 of the Communications Act.)

(d) Efforts to protect endangered U.S. personnel or property.

(e) Response to an enemy or terrorist action, civil disturbance, natural disaster, or any other unpredictable occurrence that has damaged facilities whose uninterrupted operation is critical to NSEP or the management of other ongoing crises.

(f) Certification by the head or director of a Federal agency, commander of a unified/specified command, chief of a military service, or commander of a major military command, that the telecommunications service is so critical to protection of life and property or to NSEP that it must be provided immediately.

(g) A request from an official authorized pursuant to the Foreign Intelligence Surveillance Act (50 U.S.C. 1801 *et seq.* and 18 U.S.C. 2511, 2518, 2519).

(2) *Priority Level Assignment.*

(a) Services qualifying under the Emergency NSEP category are assigned priority level ''E'' for provisioning.

(b) After 30 days, assignments of provisioning priority level ''E'' for Emergency NSEP services are automatically revoked unless extended for another 30-day period. A notice of any such revocation will be sent to service vendors.

(c) For restoration, Emergency NSEP services may be assigned priority levels under the provisions applicable to Essential NSEP services (see section 12(c)). Emergency NSEP

services not otherwise qualifying for restoration priority level assignment as Essential NSEP may be assigned a restoration priority level ''5'' for a 30-day period. Such 30-day restoration priority level assignments will be revoked automatically unless extended for another 30-day period. A notice of any such revocation will be sent to service vendors.

c. *Essential NSEP*. Telecommunication services in the Essential NSEP category are those required to be provisioned by due dates specified by service users, or restored promptly, normally without regard to associated overtime or expediting costs. They may be assigned priority level of ''1,'' ''2,'' ''3,'' ''4,'' or ''5'' for both provisioning and restoration, depending upon the nature and urgency of the supported function, the impact of lack of service or of service interruption upon the supported function, and, for priority access to public switched services, the user's level of responsibility. Priority level assignments will be valid for no more than three years unless revalidated. To be categorized as Essential NSEP, a telecommunications service must qualify under one of the four following subcategories: National Security Leadership; National Security Posture and U.S. Population Attack Warning; Public Health, Safety and Maintenance of Law and Order; or Public Welfare and Maintenance of National Economic Posture. (NOTE Under emergency circumstances, Essential NSEP telecommunication services may be recategorized as Emergency NSEP and assigned a priority level ''E'' for provisioning.)

(1) *National security leadership*. This subcategory will be strictly limited to only those telecommunication services essential to national survival if nuclear attack threatens or occurs, and critical orderwire and control services necessary to ensure the rapid and efficient provisioning or restoration of other NSEP telecommunication services. Services in this subcategory are those for which a service interruption of even a few minutes would have serious adverse impact upon the supported NSEP function.

(a) *Criteria*. To qualify under this subcategory, a service must be at least one of the following:

(i) Critical orderwire, or control service, supporting other NSEP functions.

(ii) Presidential communications service critical to continuity of government and national leadership during crisis situations.

(iii) National Command Authority communications service for military command and control critical to national survival.

(iv) Intelligence communications service critical to warning of potentially catastrophic attack.

(v) Communications service supporting the conduct of diplomatic negotiations critical to arresting or limiting hostilities.

(b) *Priority level assignment*. Services under this subcategory will normally be assigned priority level ''1'' for provisioning and restoration during the Peace/Crisis/Mobilization time period.

(2) *National security posture and U.S. population attack warning*. This subcategory covers those minimum additional telecommunication services essential to maintaining an optimum defense, diplomatic, or continuity-of-government postures before, during, and after crises situations. Such situations are those ranging from national emergencies to international crises, including nuclear attack. Services in this subcategory are those for which a service interruption ranging from a few minutes to one day would have serious adverse impact upon the supported NSEP function.

(a) *Criteria*. To qualify under this subcategory, a service must support at least one of the following NSEP functions:

(i) Threat assessment and attack warning.

(ii) Conduct of diplomacy.

(iii) Collection, processing, and dissemination of intelligence.

(iv) Command and control of military forces.

(v) Military mobilization.

(vi) Continuity of Federal government before, during, and after crises situations.

(vii) Continuity of state and local government functions supporting the Federal government during and after national emergencies.

(viii) Recovery of critical national functions after crises situations.

(ix) National space operations.

(b) *Priority level assignment*. Services under this subcategory will normally be assigned priority level ''2,'' ''3,'' ''4,'' or ''5'' for provisioning and restoration during Peacetime/Crisis/Mobilization.

(3) *Public health, safety, and maintenance of law and order*. This subcategory covers the minimum number of telecommunication services necessary for giving civil alert to the U.S. population and maintaining law and order and the health and safety of the U.S. population in times of any national, regional, or serious local emergency. These services are those for which a service interruption ranging from a few minutes to one day would have serious adverse impact upon the supported NSEP functions.

(a) *Criteria*. To qualify under this subcategory, a service must support at least one of the following NSEP functions:

(i) Population warning (other than attack warning).

(ii) Law enforcement.

(iii) Continuity of critical state and local government functions (other than support of the Federal government during and after national emergencies).

(iv) Hospitals and distributions of medical supplies.

(v) Critical logistic functions and public utility services.

(vi) Civil air traffic control.

(vii) Military assistance to civil authorities.

(viii) Defense and protection of critical industrial facilities.

(ix) Critical weather services.

(x) Transportation to accomplish the foregoing NSEP functions.

(b) *Priority level assignment.* Service under this subcategory will normally be assigned priority levels ''3,'' ''4,'' or ''5'' for provisioning and restoration during Peacetime/Crisis/Mobilization.

(4) *Public welfare and maintenance of national economic posture.* This subcategory covers the minimum number of telecommunications services necessary for maintaining the public welfare and national economic posture during any national or regional emergency. These services are those for which a service interruption ranging from a few minutes to one day would have serious adverse impact upon the supported NSEP function.

(a) *Criteria.* To qualify under this subcategory, a service must support at least one of the following NSEP functions:

(i) Distribution of food and other essential supplies.

(ii) Maintenance of national monetary, credit, and financial systems.

(iii) Maintenance of price, wage, rent, and salary stabilization, and consumer rationing programs.

(iv) Control of production and distribution of strategic materials and energy supplies.

(v) Prevention and control of environmental hazards or damage.

(vi) Transportation to accomplish the foregoing NSEP functions.

(b) *Priority level assignment.* Services under this subcategory will normally be assigned priority levels ''4'' or ''5'' for provisioning and restoration during Peacetime/Crisis/Mobilization.

d. *Limitations.* Priority levels will be assigned only to the minimum number of telecommunication services required to support an NSEP function. Priority levels will not normally be assigned to backup services on a continuing basis, absent additional justification, e.g., a service user specifies a requirement for physically diverse routing or contracts for additional continuity-of-service features. The Executive Office of the President may also establish limitations upon the relative numbers of services which may be assigned any restoration priority level. These limitations will not take precedence over laws or executive orders. Such limitations shall not be exceeded absent waiver by the Executive Office of the President.

e. *Non-NSEP services.* Telecommunication services in the non-NSEP category will be those which do not meet the criteria for either Emergency NSEP or Essential NSEP.

[53 FR 47536, Nov. 23, 1988; 54 FR 152, Jan. 4, 1989; 54 FR 1471, Jan. 13, 1989, as amended at 67 FR 13229, Mar. 21, 2002; 71 FR 69038, Nov. 29, 2006]

APPENDIX B TO PART 64—PRIORITY ACCESS SERVICE (PAS) FOR NATIONAL SECURITY AND EMERGENCY PREPAREDNESS (NSEP)

1. AUTHORITY

This appendix is issued pursuant to sections 1, 4(i), 201 through 205 and 303(r) of the Communications Act of 1934, as amended. Under these sections, the Federal Communications Commission (FCC) may permit the assignment and approval of priorities for access to commercial mobile radio service (CMRS) networks. Under section 706 of the Communications Act, this authority may be superseded by the war emergency powers of the President of the United States. This appendix provides the Commission's Order to CMRS providers and users to comply with policies and procedures establishing the Priority Access Service (PAS). This appendix is intended to be read in conjunction with regulations and procedures that the Executive Office of the President issues:

(1) To implement responsibilities assigned in section 3 of this appendix, or

(2) For use in the event this appendix is superseded by the President's emergency war powers. Together, this appendix and the regulations and procedures issued by the Executive Office of the President establish one uniform system of priority access service both before and after invocation of the President's emergency war powers.

2. BACKGROUND

a. Purpose. This appendix establishes regulatory authorization for PAS to support the needs of NSEP CMRS users.

b. Applicability. This appendix applies to the provision of PAS by CMRS licensees to users who qualify under the provisions of section 5 of this appendix.

c. Description. PAS provides the means for NSEP telecommunications users to obtain priority access to available radio channels when necessary to initiate emergency calls. It does not preempt calls in progress and is to be used during situations when CMRS network congestion is blocking NSEP call attempts. PAS is to be available to authorized NSEP users at all times in equipped CMRS markets where the service provider has voluntarily decided to provide such service. Authorized users would activate the feature on a per call basis by dialing a feature code such as *XX. PAS priorities 1 through 5 are reserved for qualified and authorized NSEP

users, and those users are provided access to CMRS channels before any other CMRS callers.

d. Definitions. As used in this appendix:

1. *Authorizing agent* refers to a Federal or State entity that authenticates, evaluates and makes recommendations to the Executive Office of the President regarding the assignment of priority access service levels.

2. *Service provider* means an FCC-licensed CMRS provider. The term does not include agents of the licensed CMRS provider or resellers of CMRS service.

3. *Service user* means an individual or organization (including a service provider) to whom or which a priority access assignment has been made.

4. The following terms have the same meaning as in Appendix A to Part 64:

(a) Assignment;

(b) Government;

(c) National Communications System;

(d) National Coordinating Center;

(e) National Security Emergency Preparedness (NSEP) Telecommunications Services (excluding the last sentence);

(f) Reconciliation;

(g) Revalidation;

(h) Revision;

(i) Revocation.

e. Administration. The Executive Office of the President will administer PAS.

3. RESPONSIBILITIES

a. The *Federal Communications Commission* will provide regulatory oversight of the implementation of PAS, enforce PAS rules and regulations, and act as final authority for approval, revision, or disapproval of priority assignments by the Executive Office of the President by adjudicating disputes regarding either priority assignments or the denial thereof by the Executive Office of the President until superseded by the President's war emergency powers under Section 706 of the Communications Act.

b. The *Executive Office of the President (EOP)* will administer the PAS system. It will:

1. Act as the final approval or denial authority for the assignment of priorities and the adjudicator of disputes during the exercise of the President's war emergency powers under section 706 of the Communications Act.

2. Receive, process, and evaluate requests for priority actions from authorizing agents on behalf of service users or directly from service users. Assign priorities or deny requests for priority using the priorities and criteria specified in section 5 of this appendix. Actions on such requests should be completed within 30 days of receipt.

3. Convey priority assignments to the service provider and the authorizing agent.

4. Revise, revalidate, reconcile, and revoke priority level assignments with service users and service providers as necessary to maintain the viability of the PAS system.

5. Maintain a database for PAS related information.

6. Issue new or revised regulations, procedures, and instructional material supplemental to and consistent with this appendix regarding the operation, administration, and use of PAS.

7. Provide training on PAS to affected entities and individuals.

8. Enlarge the role of the Telecommunications Service Priority System Oversight Committee to include oversight of the PAS system.

9. Report periodically to the FCC on the status of PAS.

10. Disclose content of the NSEP PAS database only as may be required by law.

c. An *Authorizing agent* shall:

1. Identify itself as an authorizing agent and its community of interest (State, Federal Agency) to the EOP. State Authorizing Agents will provide a central point of contact to receive priority requests from users within their state. Federal Authorizing Agents will provide a central point of contact to receive priority requests from federal users or federally sponsored entities.

2. Authenticate, evaluate, and make recommendations to the EOP to approve priority level assignment requests using the priorities and criteria specified in section 5 of this appendix. As a guide, PAS authorizing agents should request the lowest priority level that is applicable and the minimum number of CMRS services required to support an NSEP function. When appropriate, the authorizing agent will recommend approval or deny requests for PAS.

3. Ensure that documentation is complete and accurate before forwarding it to the EOP.

4. Serve as a conduit for forwarding PAS information from the EOP to the service user and vice versa. Information will include PAS requests and assignments, reconciliation and revalidation notifications, and other information.

5. Participate in reconciliation and revalidation of PAS information at the request of the EOP.

6. Comply with any regulations and procedures supplemental to and consistent with this appendix that are issued by the EOP.

7. Disclose content of the NSEP PAS database only to those having a need-to-know.

d. *Service users* will:

1. Determine the need for and request PAS assignments in a planned process, not waiting until an emergency has occurred.

2. Request PAS assignments for the lowest applicable priority level and minimum number of CMRS services necessary to provide NSEP telecommunications management and response functions during emergency/disaster situations.

3. Initiate PAS requests through the appropriate authorizing agent. The EOP will make final approval or denial of PAS requests and may direct service providers to remove PAS if appropriate. (Note: State and local government or private users will apply for PAS through their designated State government authorizing agent. Federal users will apply for PAS through their employing agency. State and local users in states where there has been no designation will be sponsored by the Federal agency concerned with the emergency function as set forth in Executive Order 12656. If no authorizing agent is determined using these criteria, the EOP will serve as the authorizing agent.)

4. Submit all correspondence regarding PAS to the authorizing agent.

5. Invoke PAS only when CMRS congestion blocks network access and the user must establish communications to fulfill an NSEP mission. Calls should be as brief as possible so as to afford CMRS service to other NSEP users.

6. Participate in reconciliation and revalidation of PAS information at the request of the authorizing agent or the EOP.

7. Request discontinuance of PAS when the NSEP qualifying criteria used to obtain PAS is no longer applicable.

8. Pay service providers as billed for PAS.

9. Comply with regulations and procedures that are issued by the EOP which are supplemental to and consistent with this appendix.

e. *Service providers* who offer any form of priority access service for NSEP purposes shall provide that service in accordance with this appendix. As currently described in the Priority Access and Channel Assignment Standard (IS–53–A), service providers will:

1. Provide PAS levels 1, 2, 3, 4, or 5 only upon receipt of an authorization from the EOP and remove PAS for specific users at the direction of the EOP.

2. Ensure that PAS system priorities supersede any other NSEP priority which may be provided.

3. Designate a point of contact to coordinate with the EOP regarding PAS.

4. Participate in reconciliation and revalidation of PAS information at the request of the EOP.

5. As technically and economically feasible, provide roaming service users the same grade of PAS provided to local service users.

6. Disclose content of the NSEP PAS database only to those having a need-to-know or who will not use the information for economic advantage.

7. Comply with regulations and procedures supplemental to and consistent with this appendix that are issued by the EOP.

8. Insure that at all times a reasonable amount of CMRS spectrum is made available for public use.

9. Notify the EOP and the service user if PAS is to be discontinued as a service.

f. The *Telecommunications Service Priority Oversight Committee* will identify and review any systemic problems associated with the PAS system and recommend actions to correct them or prevent their recurrence.

4. APPEAL

Service users and authorizing agents may appeal any priority level assignment, denial, revision or revocation to the EOP within 30 days of notification to the service user. The EOP will act on the appeal within 90 days of receipt. If a dispute still exists, an appeal may then be made to the FCC within 30 days of notification of the EOP's decision. The party filing the appeal must include factual details supporting its claim and must provide a copy of the appeal to the EOP and any other party directly involved. Involved parties may file a response to the appeal made to the FCC within 20 days, and the initial filing party may file a reply within 10 days thereafter. The FCC will provide notice of its decision to the parties of record. Until a decision is made, the service will remain status quo.

5. PAS PRIORITY LEVELS AND QUALIFYING CRITERIA

The following PAS priority levels and qualifying criteria apply equally to all users and will be used as a basis for all PAS assignments. There are five levels of NSEP priorities, priority one being the highest. The five priority levels are:

1. Executive Leadership and Policy Makers
2. Disaster Response/Military Command and Control
3. Public Health, Safety and Law Enforcement Command
4. Public Services/Utilities and Public Welfare
5. Disaster Recovery

These priority levels were selected to meet the needs of the emergency response community and provide priority access for the command and control functions critical to management of and response to national security and emergency situations, particularly during the first 24 to 72 hours following an event. Priority assignments should only be requested for key personnel and those individuals in national security and emergency response leadership positions. PAS is not intended for use by all emergency service personnel.

A. Priority 1: Executive Leadership and Policy Makers.

Users who qualify for the Executive Leadership and Policy Makers priority will be assigned priority one. A limited number of CMRS technicians who are essential to restoring the CMRS networks shall also receive this highest priority treatment. Examples of those eligible include:

(i) The President of the United States, the Secretary of Defense, selected military leaders, and the minimum number of senior staff necessary to support these officials;

(ii) State governors, lieutenant governors, cabinet-level officials responsible for public safety and health, and the minimum number of senior staff necessary to support these officials; and

(iii) Mayors, county commissioners, and the minimum number of senior staff to support these officials.

B. Priority 2: Disaster Response/Military Command and Control

Users who qualify for the Disaster Response/Military Command and Control priority will be assigned priority two. Individuals eligible for this priority include personnel key to managing the initial response to an emergency at the local, state, regional and federal levels. Personnel selected for this priority should be responsible for ensuring the viability or reconstruction of the basic infrastructure in an emergency area. In addition, personnel essential to continuity of government and national security functions (such as the conduct of international affairs and intelligence activities) are also included in this priority. Examples of those eligible include:

(i) Federal emergency operations center coordinators, e.g., Manager, National Coordinating Center for Telecommunications, National Interagency Fire Center, Federal Coordinating Officer, Federal Emergency Communications Coordinator, Director of Military Support;

(ii) State emergency Services director, National Guard Leadership, State and Federal Damage Assessment Team Leaders;

(iii) Federal, state and local personnel with continuity of government responsibilities;

(iv) Incident Command Center Managers, local emergency managers, other state and local elected public safety officials; and

(v) Federal personnel with intelligence and diplomatic responsibilities.

C. Priority 3: Public Health, Safety, and Law Enforcement Command

Users who qualify for the Public Health, Safety, and Law Enforcement Command priority will be assigned priority three. Eligible for this priority are individuals who direct operations critical to life, property, and maintenance of law and order immediately following an event. Examples of those eligible include:

(i) Federal law enforcement command;

(ii) State police leadership;

(iii) Local fire and law enforcement command;

(iv) Emergency medical service leaders;

(v) Search and rescue team leaders; and

(vi) Emergency communications coordinators.

D. Priority 4: Public Services/Utilities and Public Welfare

Users who qualify for the Public Services/Utilities and Public Welfare priority will be assigned priority four. Eligible for this priority are those users whose responsibilities include managing public works and utility infrastructure damage assessment and restoration efforts and transportation to accomplish emergency response activities. Examples of those eligible include:

(i) Army Corps of Engineers leadership;

(ii) Power, water and sewage and telecommunications utilities; and

(iii) Transportation leadership.

E. Priority 5: Disaster Recovery

Users who qualify for the Disaster Recovery priority will be assigned priority five. Eligible for this priority are those individuals responsible for managing a variety of recovery operations after the initial response has been accomplished. These functions may include managing medical resources such as supplies, personnel, or patients in medical facilities. Other activities such as coordination to establish and stock shelters, to obtain detailed damage assessments, or to support key disaster field office personnel may be included. Examples of those eligible include:

(i) Medical recovery operations leadership;

(ii) Detailed damage assessment leadership;

(iii) Disaster shelter coordination and management; and

(iv) Critical Disaster Field Office support personnel.

6. LIMITATIONS

PAS will be assigned only to the minimum number of CMRS services required to support an NSEP function. The Executive Office of the President may also establish limitations upon the relative numbers of services that may be assigned PAS or the total number of PAS users in a serving area. These limitations will not take precedence over laws or executive orders. Limitations established shall not be exceeded.

[65 FR 48396, Aug. 8, 2000]

PART 65—INTERSTATE RATE OF RETURN PRESCRIPTION PROCEDURES AND METHODOLOGIES

Subpart A—General

Sec.

65.1 Application of part 65.

Subpart B—Procedures

65.100 Participation and acceptance of service designation.
65.101 Initiation of unitary rate of return prescription proceedings.
65.102 Petitions for exclusion from unitary treatment and for individual treatment in determining authorized return for interstate exchange access service.
65.103 Procedures for filing rate of return submissions.
65.104 Page limitations for rate of return submissions.
65.105 Discovery.

Subpart C—Exchange Carriers

65.300 Calculations of the components and weights of the cost of capital.
65.301 Cost of equity.
65.302 Cost of debt.
65.303 Cost of preferred stock.
65.304 Capital structure.
65.305 Calculation of the weighted average cost of capital.
65.306 Calculation accuracy.
65.450 Net income.

Subpart D—Interexchange Carriers

65.500 Net income.

Subpart E—Rate of Return Reports

65.600 Rate of return reports.

Subpart F—Maximum Allowable Rates of Return

65.700 Determining the maximum allowable rate of return.
65.701 Period of review.
65.702 Measurement of interstate service earnings.

Subpart G—Rate Base

65.800 Rate base.
65.810 Definitions.
65.820 Included items.
65.830 Deducted items.

AUTHORITY: Secs. 4, 201, 202, 203, 205, 218, 403, 48 Stat., 1066, 1072, 1077, 1094, as amended, 47 U.S.C. 151, 154, 201, 202, 203, 204, 205, 218, 219, 220, 403.

Subpart A—General

§ 65.1 Application of part 65.

(a) This part establishes procedures and methodologies for Commission prescription of an authorized unitary interstate exchange access rate of return and individual rates of return for the interstate exchange access rates of certain carriers pursuant to § 65.102. This part shall apply to those interstate services of local exchange carriers as the Commission shall designate by rule or order, except that all local exchange carriers shall provide to the Commission that information which the Commission requests for purposes of conducting prescription proceedings pursuant to this part.

(b) Local exchange carriers subject to §§ 61.41 through 61.49 of this chapter are exempt from the requirements of this part with the following exceptions:

(1) Except as otherwise required by Commission order, carriers subject to §§ 61.41 through 61.49 of this chapter shall employ the rate of return value calculated for interstate access services in complying with any applicable rules under parts 36 and 69 that require a return component;

(2) Carriers subject to §§ 61.41 through 61.49 of this chapter shall be subject to § 65.600(d);

(3) Carriers subject to §§ 61.41 through 61.49 of this chapter shall continue to comply with the prescribed rate of return when offering any services specified in § 61.42(f) of this chapter unless the Commission otherwise directs; and

(4) Carriers subject to §§ 61.41 through 61.49 of this chapter shall comply with Commission information requests made pursuant to § 65.1(a).

[60 FR 28543, June 1, 1995]

Subpart B—Procedures

§ 65.100 Participation and acceptance of service designation.

(a) All interstate exchange access carriers, their customers, and any member of the public may participate in rate of return proceedings to determine the authorized unitary interstate exchange access or individual interstate exchange access rates of return authorized pursuant to § 65.102.

(b) Participants shall state in their initial pleading in a prescription proceeding whether they wish to receive service of documents and other material filed in the proceeding. Participants that wish to receive service by hand on the filing dates when so required by this part 65 shall specify in their initial pleading in a prescription proceeding, as specified in § 65.103 (b)

and (c), an agent for acceptance of service by hand in the District of Columbia. The participant may elect in its pleading to receive service by mail or upon an agent at another location. When such an election is made, other participants need not complete service on the filing date, and requests for extension of time due to delays in completion of service will not be entertained.

[60 FR 28544, June 1, 1995]

§ 65.101 Initiation of unitary rate of return prescription proceedings.

(a) Whenever the Commission determines that the monthly average yields on ten (10) year United States Treasury securities remain, for a consecutive six (6) month period, at least 150 basis points above or below the average of the monthly average yields in effect for the consecutive six (6) month period immediately prior to the effective date of the current prescription, the Commission shall issue a notice inquiring whether a rate of return prescription according to this part should commence. This notice shall state:

(1) The deadlines for filing initial and reply comments regarding the notice;

(2) The cost of debt, cost of preferred stock, and capital structure computed in accordance with §§ 65.302, 65.303, and 65.304; and

(3) Such other information as the Commission may deem proper.

(b) Based on the information submitted in response to the notice described in § 65.101(a), and on any other information specifically identified, the Commission may issue a notice initiating a prescription proceeding pursuant to this part.

(c) The Chief, Wireline Competition Bureau, may issue the notice described in § 65.101(a).

[60 FR 28544, June 1, 1995, as amended at 67 FR 13229, Mar. 21, 2002]

§ 65.102 Petitions for exclusion from unitary treatment and for individual treatment in determining authorized return for interstate exchange access service.

(a) Exclusion from unitary treatment will be granted for a period of two years if the cost of capital for interstate exchange service is so low as to be confiscatory because it is outside the zone of reasonableness for the individual carrier's required rate of return for interstate exchange access services.

(b) A petition for exclusion from unitary treatment and for individual treatment must plead with particularity the exceptional facts and circumstances that justify individual treatment. The showing shall include a demonstration that the exceptional facts and circumstances are not of transitory effect, such that exclusion for a period of a least two years is justified.

(c) A petition for exclusion from unitary treatment and for individual treatment may be filed at any time. When a petition is filed at a time other than that specified in § 65.103(b)(2), the petitioner must provide compelling evidence that its need for individual treatment is not simply the result of short-term fluctuations in the cost of capital or similar events.

[60 FR 28544, June 1, 1995]

§ 65.103 Procedures for filing rate of return submissions.

(a) Rate of return submissions listed in § 65.103 (b)(1) and (c) may include any relevant information, subject to the page limitations of § 65.104. The Chief, Wireline Competition Bureau, may require from carriers providing interstate services, and from other participants submitting rate of return submissions, data, studies or other information that are reasonably calculated to lead to a full and fair record.

(b) In proceedings to prescribe an authorized unitary rate of return on interstate access services, interested parties may file direct case submissions, responses, and rebuttals. Direct case submissions shall be filed within sixty (60) calendar days following the effective date of a Commission notice initiating a rate of return proceeding pursuant to § 65.101(b). Rate of return submissions responsive to the direct case submissions shall be filed within sixty (60) calendar days after the deadline for filing direct case submissions. Rebuttal submissions shall be field within twenty-one (21) calendar days after the deadline for filing responsive submissions.

(c) Petitions for exclusion from unitary treatment and for individual treatment may be filed on the same date as the deadline for filing responsive rate of return submissions. Oppositions shall be filed within 35 calendar days thereafter. Rebuttal submissions shall be filed within 21 calendar days after the deadline for filing responsive submissions.

(d) An original and 4 copies of all rate of return submissions shall be filed with the Secretary.

(e) The filing party shall serve a copy of each rate of return submission, other than an initial submission, on all participants who have filed a designation of service notice pursuant to § 65.100(b).

[60 FR 28544, June 1, 1995, as amended at 67 FR 13229, Mar. 21, 2002]

§ 65.104 Page limitations for rate of return submissions.

Rate of return submissions, including all argument, attachments, appendices, supplements, and supporting materials, such as testimony, data and documents, but excluding tables of contents and summaries of argument, shall be subject to the following double spaced typewritten page limits:

(a) The direct case submission of any participant shall not exceed 70 pages in length.

(b) The responsive submission of any participant shall not exceed 70 pages in length.

(c) The rebuttal submission of any participant shall not exceed 50 pages in length.

(d) Petitions for exclusion from unitary treatment shall not exceed 70 pages in length. Oppositions to petitions for exclusion shall not exceed 50 pages in length. Rebuttals shall not exceed 35 pages in length.

[60 FR 28544, June 1, 1995]

§ 65.105 Discovery.

(a) Participants shall file with each rate of return submission copies of all information, including studies, financial analysts' reports, and any other documents relied upon by participants or their experts in the preparation of their submission. Information filed pursuant to this paragraph for which protection from disclosure is sought shall be filed subject to protective orders which shall be duly granted by the Chief, Wireline Competition Bureau, for good cause shown.

(b) Participants may file written interrogatories and requests for documents directed to any rate of return submission and not otherwise filed pursuant to § 65.105(a). The permissible scope of examination is that participants may be examined upon any matter, not privileged, that will demonstrably lead to the production of material, relevant, decisionally significant evidence.

(c) Discovery requests pursuant to § 65.105(b), including written interrogatories, shall be filed within 14 calendar days after the filing of the rate of return submission to which the request is directed. Discovery requests that are not opposed shall be complied with within 14 calendar days of the request date.

(d) Oppositions to discovery requests made pursuant to § 65.105(b), including written interrogatories, shall be filed within 7 calendar days after requests are filed. The Chief, Wireline Competition Bureau, shall rule upon any such opposition. Except as stayed by the Commission or a Court, any required response to a discovery request that is opposed shall be provided within 14 calendar days after release of the ruling of the Chief, Wireline Competition Bureau.

(e) An original and 4 copies of all information described in § 65.105(a) and all requests, oppositions, and responses made pursuant to § 65.105 (a), (b) and (d) shall be filed with the Secretary.

(f) Service of requests, oppositions, and responses made pursuant to § 65.105 (b) and (d) shall be made upon all participants who have filed a designation of service notice pursuant to § 65.100(b). Service of requests upon participants who have filed designation of service notices pursuant to § 65.100(b) shall be made by hand on the filing dates thereof.

[60 FR 28544, June 1, 1995, as amended at 67 FR 13229, Mar. 21, 2002]

Subpart C—Exchange Carriers

§ 65.300 Calculations of the components and weights of the cost of capital.

(a) Sections 65.301 through 65.303 specify the calculations that are to be performed in computing cost of debt, cost of preferred stock, and financial structure weights for prescription proceedings. The calculations shall determine, where applicable, a composite cost of debt, a composite cost of preferred stock, and a composite financial structure for all local exchange carriers with annual revenues equal to or above the indexed revenue threshold as defined in § 32.9000. The calculations shall be based on data reported to the Commission in FCC Report 43–02. (See 47 CFR 43.21). The results of the calculations shall be used in the represcription proceeding to which they relate unless the record in that proceeding shows that their use would be unreasonable.

(b) Excluded from cost of capital calculations made pursuant to § 65.300 shall be those sources of financing that are not investor supplied, or that are otherwise subtracted from a carrier's rate base pursuant to Commission orders governing the calculation of net rate base amounts in tariff filings that are made pursuant to section 203 of the Communications Act of 1934, 47 U.S.C. 203, or that were treated as ''zero cost'' sources of financing in section 450 and subpart G of this part 65. Specifically excluded are: accounts payable, accrued taxes, accrued interest, dividends payable, deferred credits and operating reserves, deferred taxes and deferred tax credits.

[60 FR 28545, June 1, 1995, as amended at 67 FR 5702, Feb. 6, 2002]

§ 65.301 Cost of equity.

The cost of equity shall be determined in represcription proceedings after giving full consideration to the evidence in the record, including such evidence as the Commission may officially notice.

[60 FR 28545, June 1, 1995]

§ 65.302 Cost of debt.

The formula for determining the cost of debt is equal to:

$$\text{Embedded Cost of Debt} = \frac{\text{Total Annual Interest Expense}}{\text{Average Outstanding Debt}}$$

Where:

''Total Annual Interest Expense'' is the total interest expense for the most recent two years for all local exchange carriers with annual revenues equal to or above the indexed revenue threshold as defined in § 32.9000.

''Average Outstanding Debt'' is the average of the total debt for the most recent two years for all local exchange carriers with annual revenues equal to or above the indexed revenue threshold as defined in § 32.9000.

[60 FR 28545, June 1, 1995, as amended at 67 FR 5702, Feb. 6, 2002]

§ 65.303 Cost of preferred stock.

The formula for determining the cost of preferred stock is:

$$\text{Cost of Preferred Stock} = \frac{\text{Total Annual Preferred Dividends}}{\text{Proceeds from the Issuance of Preferred Stock}}$$

Where:

''Total Annual Preferred Dividends'' is the total dividends on preferred stock for the most recent two years for all local exchange carriers with annual revenues equal to or above the indexed revenue threshold as defined in § 32.9000. ''Proceeds from the Issuance of Preferred Stock'' is the average of the total net proceeds from the issuance of preferred

stock for the most recent two years for all local exchange carriers with annual revenues equal to or above the indexed revenue threshold as defined in § 32.9000.

[60 FR 28545, June 1, 1995, as amended at 67 FR 5702, Feb. 6, 2002]

§ 65.304 Capital structure.

The proportion of each cost of capital component in the capital structure is equal to:

Proportion in the capital structure =

$$\frac{\text{Book Value of particular component}}{\text{Book Value of Debt} + \text{Book Value of Preferred Stock} + \text{Book Value of Equity}}$$

Where:

''Book Value of particular component'' is the total of the book values of that component for all local exchange carriers with annual revenues equal to or above the indexed revenue threshold as defined in § 32.9000.

''Book Value of Debt+Book Value of Preferred Stock+Book Value of Equity'' is the total of the book values of all the components for all local exchange carriers with annual revenues equal to or above the indexed revenue threshold as defined in § 32.9000.

The total of all proportions shall equal 1.00.

[60 FR 28545, June 1, 1995, as amended at 67 FR 5702, Feb. 6, 2002]

§ 65.305 Calculation of the weighted average cost of capital.

(a) The composite weighted average cost of capital is the sum of the cost of debt, the cost of preferred stock, and the cost of equity, each weighted by its proportion in the capital structure of the telephone companies.

(b) Unless the Commission determines to the contrary in a prescription proceeding, the composite weighted average cost of debt and cost of preferred stock is the composite weight computed in accordance with § 65.304 multiplied by the composite cost of the component computed in accordance with § 65.301 or § 65.302, as applicable. The composite weighted average cost of equity will be determined in each prescription proceeding.

[60 FR 28546, June 1, 1995]

§ 65.306 Calculation accuracy.

In a prescription proceeding, the final determinations of the cost of equity, cost of debt, cost of preferred stock and their capital structure weights shall be accurate to two decimal places.

[60 FR 28546, June 1, 1995]

§ 65.450 Net income.

(a) Net income shall consist of all revenues derived from the provision of interstate telecommunications services regulated by this Commission less expenses recognized by the Commission as necessary to the provision of these services. The calculation of expenses entering into the determination of net income shall include the interstate portion of plant specific operations (Accounts 6110–6441), plant nonspecific operations (Accounts 6510–6565), customer operations (Accounts 6610–6623), corporate operations (Accounts 6720–6790), other operating income and expense (Account 7100), and operating taxes (Accounts 7200–7250), except to the extent this Commission specifically provides to the contrary.

(b) Gains and losses related to the disposition of plant in service items, shall be handled as follows:

(1) Gains related to property sold to others and leased back under capital leases for use in telecommunications services shall be recorded in Account 4300, Other long-term liabilities and deferred credits, and credited to Account 6563, Amortization expense—tangible, over the amortization period established for the capital lease;

(2) Gains or losses related to the disposition of land and other nondepreciable items recorded in Account 7100 (Other operating income and expense) shall be included in net income for ratemaking purposes, but adjusted to reflect the relative amount of time

such property was used in regulated operations and included in the rate base; and

(3) Proceeds related to the disposition of property depreciated on a group basis and used jointly in regulated and nonregulated activities, including sale-leaseback arrangements for property depreciated on a group basis, shall be credited to the related reserves and attributed to regulated and nonregulated in proportion to the accumulated regulated and nonregulated depreciation for that group.

(c) Gains or losses related to the disposition of property that was never included in the rate base shall not be considered for ratemaking purposes.

(d) Except for the allowance for funds used during construction, reasonable charitable deductions and interest related to customer deposits, the amounts recorded as nonoperating income and expenses and taxes (Accounts 7300 and 7400) and interest and related items (Account 7500) and extraordinary items (Account 7600) shall not be included unless this Commission specifically determines that particular items recorded in those accounts shall be included.

[53 FR 1029, Jan. 15, 1988, as amended at 60 FR 12139, Mar. 6, 1995; 67 FR 5702, Feb. 6, 2002; 69 FR 53652, Sept. 2, 2004]

Subpart D—Interexchange Carriers

§ 65.500 Net income.

The net income methodology specified in § 65.450 shall be utilized by all interexchange carriers that are so designated by Commission order.

[60 FR 28546, June 1, 1995]

Subpart E—Rate of Return Reports

§ 65.600 Rate of return reports.

(a) Subpart E shall apply to those interstate communications common carriers and exchange carriers that are so designated by Commission order.

(b) Each local exchange carrier or group of affiliated carriers which is not subject to §§ 61.41 through 61.49 of this chapter and which has filed individual access tariffs during the preceding enforcement period shall file with the Commission within three (3) months after the end of each calendar year, an annual rate of return monitoring report which shall be the enforcement period report. Reports shall be filed on the appropriate report form prescribed by the Commission (see § 1.795 of this chapter) and shall provide full and specific answers to all questions propounded and information requested in the currently effective report form. The number of copies to be filed shall be specified in the applicable report form. At least one copy of the report shall be signed on the signature page by the responsible officer. A copy of each report shall be retained in the principal office of the respondent and shall be filed in such a manner as to be readily available for reference and inspection. Final adjustments to the enforcement period report shall be made by September 30 of the year following the enforcement period to ensure that any refunds can be properly reflected in an annual access filing.

(c) Each interexchange carrier subject to §§ 61.41 through 61.49 shall file with the Commission, within three (3) months after the end of each calendar year, the total interstate rate of return for that year for all interstate services subject to regulation by the Commission. Each such filing shall include a report of the total revenues, total expenses and taxes, operating income, and the rate base. A copy of the filing shall be retained in the principal office of the respondent and shall be filed in such manner as to be readily available for reference and inspection.

(d)(1) Each local exchange carrier or group of affiliated carriers subject to §§ 61.41 through 61.49 of this chapter shall file with the Commission within three (3) months after the end of each calendar year a report of its total interstate rate of return for that year. Such filings shall include a report of the total revenues, total expenses and taxes, operating income, and the rate base. Reports shall be filed on the appropriate form prescribed by the Commission (see § 1.795 of this chapter) and shall provide full and specific answers to all questions propounded and information requested in the currently effective form. The number of copies to

be filed shall be specified in the applicable report form. At least one copy of the report shall be retained in the principal office of the respondent and shall be filed in such manner as to be readily available for reference and inspection.

(2) Each local exchange carrier or group of affiliated carriers subject to §§ 61.41 through 61.49 of this chapter shall file with the Commission within fifteen (15) months after the end of each calendar year a report reflecting any corrections or modifications to the report filed pursuant to paragraph (d)(1) of this section. Reports shall be filed on the appropriate form prescribed by the Commission (see § 1.795 of this chapter) and shall provide full and specific answers to all questions propounded and information requested in the currently effective form. The number of copies to be filed shall be specified in the applicable report form. At least one copy of the report shall be retained in the principal office of the respondent and shall be filed in such manner as to be readily available for reference and inspection.

[52 FR 274, Jan. 5, 1987, as amended at 54 FR 19844, May 8, 1989; 55 FR 42385, Oct. 19, 1990; 56 FR 21617, May 10, 1991; 62 FR 5166, Feb. 4, 1997]

Subpart F—Maximum Allowable Rates of Return

§ 65.700 Determining the maximum allowable rate of return.

(a) The maximum allowable rate of return for any exchange carrier's earnings on any access service category shall be determined by adding a fixed increment of four-tenths of one percent of the exchange carrier prescribed rate of return.

(b) The maximum allowable rate of return for any exchange carrier's overall interstate earnings for all access service categories shall be determined by adding a fixed increment of one-quarter of one percent to the exchange carrier prescribed rate of return.

(c) The maximum allowable rate of return for rates filed by local exchange carrier subject to § 61.50 of this chapter, shall be determined by adding a fixed increment of one and one-half percent to the carriers prescribed rate of return.

[51 FR 11034, Apr. 1, 1986, as amended at 58 FR 36149, July 6, 1993; 60 FR 28546, June 1, 1995]

§ 65.701 Period of review.

For both exchange and interexchange carriers subject to this part, interstate earnings shall be measured over a two year period to determine compliance with the maximum allowable rate of return. The review periods shall commence on January 1 in odd-numbered years and shall end on December 31 in even-numbered years.

[60 FR 28546, June 1, 1995]

§ 65.702 Measurement of interstate service earnings.

(a) For exchange carriers, earnings shall be measured separately for each access service category for purposes of determining compliance with the maximum allowable rate of return. The access service categories shall be: an aggregated category consisting of Special Access, § 69.113, and Contribution Charges for Special Access Expanded Interconnection, § 69.122; Connection Charges for Expanded Interconnection, § 69.121; Common Line, §§ 69.104–69.105; and an aggregated category consisting of Line Termination, § 69.106, Intercept, § 69.108, Local Switching, § 69.107, Transport, §§ 69.110–69.112, 69.124, 69.125, and Information, § 69.109. The Billing and Collection access element shall not be included in any access service category for purposes of this part. The Commission will also separately review exchange carrier overall interstate earnings subject to this part for determining compliance with the maximum allowable rate of return determined by § 65.700(b).

(b) For exchange carriers, earnings shall be measured for purposes of determining compliance with the maximum allowable rates of return separately for each study area; provided, however, that if the carrier has filed or concurred in access tariffs aggregating costs and rates for two or more study areas, the earnings will be determined for the aggregated study areas rather than for each study area separately. If an exchange carrier has not utilized

the same level of study area aggregation during the entire two-year earnings review period, then the carrier's earnings will be measured for the entire two-year period on the basis of the tariffs in effect at the end of the second year of the two-year review period; provided, however, that if tariffs representing a higher level of study area aggregation were not in effect for at least eight months in the second year, then the carrier's earnings will be measured on the basis of the study area level of aggregation in effect for the majority of the two-year period; provided further, that any carrier that was not a member of the National Exchange Carrier Association or other voluntary pools for both years of the two-year review period will have its earnings reviewed individually for the full two-year period.

[51 FR 11034, Apr. 1, 1986, as amended at 57 FR 54719, Nov. 20, 1992; 58 FR 48763, Sept. 17, 1993; 60 FR 28546, June 1, 1995]

Subpart G—Rate Base

SOURCE: 53 FR 1029, Jan. 15, 1988, unless otherwise noted.

§ 65.800 Rate base.

The rate base shall consist of the interstate portion of the accounts listed in § 65.820 that has been invested in plant used and useful in the efficient provision of interstate telecommunications services regulated by this Commission, minus any deducted items computed in accordance with § 65.830.

§ 65.810 Definitions.

As used in this subpart ''account xxxx'' means the account of that number kept in accordance with the Uniform System of Accounts for Class A and Class B Telecommunications Companies in 47 CFR part 32.

§ 65.820 Included items.

(a) *Telecommunications plant.* The interstate portion of all assets summarized in Account 2001 (Telecommunications Plant in Service) and Account 2002 (Property Held for Future Use), net of accumulated depreciation and amortization, and Account 2003 (Telecommunications Plant Under Construction), and, to the extent such inclusions are allowed by this Commission, Account 2005 (Telecommunications Plant Adjustment). Any interest cost for funds used during construction capitalized on assets recorded in these accounts shall be computed in accordance with the procedures in Sec. 32.2000(c)(2)(x) of this chapter.

(b) *Material and supplies.* The interstate portion of assets summarized in Account 1220.1 (Material and Supplies).

(c) *Noncurrent assets.* The interstate portion of Class B Rural Telephone Bank stock contained in Account 1410 and the interstate portion of assets summarized in Account 1410 (Other Noncurrent Assets) and Account 1438 (Deferred Maintenance, Retirements and Deferred Charges), only to the extent that they have been specifically approved by this Commission for inclusion (Note: The interstate portion of assets summarized in Account 1410 should not include any amounts related to investments, sinking funds or unamortized debt issuance expense). Except as noted above, no amounts from accounts 1406 through 1500 shall be included.

(d) *Cash working capital.* The average amount of investor-supplied capital needed to provide funds for a carrier's day-to-day interstate operations. Class A carriers may calculate a cash working capital allowance either by performing a lead-lag study of interstate revenue and expense items or by using the formula set forth in paragraph (e) of this section. Class B carriers, in lieu of performing a lead-lag study or using the formula in paragraph (e) of this section, may calculate the cash working capital allowance using a standard allowance which will be established annually by the Chief, Wireline Competition Bureau. When either the lead-lag study or formula method is used to calculate cash working capital, the amount calculated under the study or formula may be increased by minimum bank balances and working cash advances to determine the cash working capital allowance. Once a carrier has selected a method of determining its cash working capital allowance, it shall not change to an optional method from one year to the next without Commission approval.

(e) In lieu of a full lead-lag study, carriers may calculate the cash working capital allowance using the following formula.

(1) Compute the weighted average revenue lag days as follows:

(i) Multiply the average revenue lag days for interstate revenues billed in arrears by the percentage of interstate revenues billed in arrears.

(ii) Multiply the average revenue lag days for interstate revenues billed in advance by the percentage of interstate revenues billed in advance. (Note: a revenue lead should be shown as a negative lag.)

(iii) Add the results of paragraphs (e)(1) (i) and (ii) of this section to determine the weighted average revenue lag days.

(2) Compute the weighted average expense lag days as follows:

(i) Multiply the average lag days for interstate expenses (*i.e.*, cash operating expenses plus interest) paid in arrears by the percentage of interstate expenses paid in arrears.

(ii) Multiply the average lag days for interstate expenses paid in advance by the percentage of interstate expenses paid in advance. (Note: an expense lead should be shown as a negative lag.)

(iii) Add the results of paragraphs (e)(2) (i) and (ii) of this section to determine the weighted average expense lag days.

(3) Compute the weighted net lag days by deducting the weighted average expense lag days from the weighted average revenue lag days.

(4) Compute the percentage of a year represented by the weighted net lag days by dividing the days computed in paragraph (e)(3) of this section by 365 days.

(5) Compute the cash working capital allowance by multiplying the interstate cash operating expenses (*i.e.*, operating expenses minus depreciation and amortization) plus interest by the percentage computed in paragraph (e)(4) of this section.

[54 FR 9048, Mar. 3, 1989, as amended at 60 FR 12139, Mar. 6, 1995; 67 FR 5703, Feb. 6, 2002; 67 FR 13229, Mar. 21, 2002]

§ 65.830 Deducted items.

(a) The following items shall be deducted from the interstate rate base.

(1) The interstate portion of deferred taxes (Accounts 4100 and 4340).

(2) The interstate portion of customer deposits (Account 4040).

(3) The interstate portion of other long-term liabilities in (Account 4300 Other long-term liabilities and deferred credits) that were derived from the expenses specified in Sec. 65.450(a).

(4) The interstate portion of other deferred credits in (Account 4300 Other long-term liabilities and deferred credits) to the extent they arise from the provision of regulated telecommunications services. This shall include deferred gains related to sale-leaseback arrangements.

(b) The interstate portion of deferred taxes, customer deposits and other deferred credits shall be determined as prescribed by 47 CFR part 36.

(c) The interstate portion of other long-term liabilities included in (Account 4300 Other long-term liabilities and deferred credits) shall bear the same proportionate relationships as the interstate/intrastate expenses which gave rise to the liability.

[54 FR 9049, Mar. 3, 1989, as amended at 62 FR 15118, Mar. 31, 1997; 67 FR 5703, Feb. 6, 2002]

PART 68—CONNECTION OF TERMINAL EQUIPMENT TO THE TELEPHONE NETWORK

Subpart A—General

Sec.
68.1 Purpose.
68.2 Scope.
68.3 Definitions.
68.4 Hearing aid-compatible telephones.
68.5 Waivers.
68.6 Telephones with volume control.
68.7 Technical criteria for terminal equipment.

Subpart B—Conditions on Use of Terminal Equipment

68.100 General.
68.102 Terminal equipment approval requirement.
68.105 Minimum point of entry (MPOE) and demarcation point.
68.106 Notification to provider of wireline telecommunications.
68.108 Incidence of harm.
68.110 Compatibility of the public switched telephone network and terminal equipment.
68.112 Hearing aid-compatibility.

68.160 Designation of Telecommunication Certification Bodies (TCBs).
68.162 Requirements for Telecommunication Certification Bodies.

Subpart C—Terminal Equipment Approval Procedures

68.201 Connection to the public switched telephone network.
68.211 Terminal equipment approval revocation procedures.
68.213 Installation of other than ''fully protected'' non-system simple customer premises wiring.
68.214 Changes in other than ''fully protected'' premises wiring that serves fewer than four subscriber access lines.
68.215 Installation of other than ''fully-protected'' system premises wiring that serves more than four subscriber access lines.
68.218 Responsibility of the party acquiring equipment authorization.
68.224 Notice of non-hearing aid compatibility.

Subpart D—Conditions for Terminal Equipment Approval

68.300 Labeling requirements.
68.316 Hearing aid compatibility: Technical requirements.
68.317 Hearing aid compatibility volume control: technical standards.
68.318 Additional limitations.
68.320 Supplier's Declaration of Conformity.
68.321 Location of responsible party.
68.322 Changes in name, address, ownership or control of responsible party.
68.324 Supplier's Declaration of Conformity requirements.
68.326 Retention of records.
68.346 Description of testing facilities.
68.348 Changes in equipment and circuitry subject to a Supplier's Declaration of Conformity.
68.350 Revocation of Supplier's Declaration of Conformity.
68.354 Numbering and labeling requirements for terminal equipment.

Subpart E—Complaint Procedures

68.400–68.412 [Reserved]
68.414 Hearing aid-compatibility: Enforcement.
68.415 Hearing aid-compatibility and volume control informal complaints.
68.417 Informal complaints; form and content.
68.418 Procedure; designation of agents for service.
68.419 Answers to informal complaints.
68.420 Review and disposition of informal complaints.
68.423 Actions by the Commission on its own motion.

Subpart F [Reserved]

Subpart G—Administrative Council for Terminal Attachments

68.602 Sponsor of the Administrative Council for Terminal Attachments.
68.604 Requirements for submitting technical criteria.
68.608 Publication of technical criteria.
68.610 Database of terminal equipment.
68.612 Labels on terminal equipment.
68.614 Oppositions and appeals.

AUTHORITY: 47 U.S.C. 154, 303.

Subpart A—General

AUTHORITY: Secs. 4, 5, 303, 48 Stat., as amended, 1066, 1068, 1082; (47 U.S.C. 154, 155, 303).

SOURCE: 45 FR 20841, Mar. 31, 1980, unless otherwise noted.

§ 68.1 Purpose.

The purpose of the rules and regulations in this part is to provide for uniform standards for the protection of the telephone network from harms caused by the connection of terminal equipment and associated wiring thereto, and for the compatibility of hearing aids and telephones so as to ensure that persons with hearing aids have reasonable access to the telephone network.

(47 U.S.C. 151, 154(i), 154(j), 201–205, 218, 220, 313, 403, 412, and 5 U.S.C. 553)

[49 FR 21733, May 23, 1984]

§ 68.2 Scope.

(a) Except as provided in paragraphs (b) and (c) of this section, the rules and regulations apply to direct connection of all terminal equipment to the public switched telephone network for use in conjunction with all services other than party line services.

(b) *National defense and security*. Where the Secretary of Defense or authorized agent or the head of any other governmental department, agency, or administration (approved in writing by the Commission to act pursuant to this rule) or authorized representative, certifies in writing to the appropriate common carrier that compliance with the provisions of part 68 could result in the disclosure of communications

equipment or security devices, locations, uses, personnel, or activity which would adversely affect the national defense and security, such equipment or security devices may be connected to the telephone company provided communications network without compliance with this part, provided that each written certification states that:

(1) The connection is required in the interest of national defense and security;

(2) The equipment or device to be connected either complies with the technical criteria pertaining thereto or will not cause harm to the nationwide telephone network or to employees of any provider of wireline telecommunications; and

(3) The installation is performed by well-trained, qualified employees under the responsible supervision and control of a person who is a licensed professional engineer in the jurisdiction in which the installation is performed.

(c) Governmental departments, agencies, or administrations that wish to qualify for interconnection of equipment or security devices pursuant to this section shall file a request with the Secretary of this Commission stating the reasons why the exemption is requested. A list of these departments, agencies, or administrations that have filed requests shall be published in the FEDERAL REGISTER. The Commission may take action with respect to those requests 30 days after publication. The Commission action shall be published in the FEDERAL REGISTER. However, the Commission may grant, on less than the normal notice period or without notice, special temporary authority, not to exceed 90 days, for governmental departments, agencies, or administrations that wish to qualify for interconnection of equipment or security devices pursuant to this section. Requests for such authority shall state the particular fact and circumstances why authority should be granted on less than the normal notice period or without notice. In such cases, the Commission shall endeavor to publish its disposition as promptly as possible in the FEDERAL REGISTER.

[66 FR 7580, Jan. 24, 2001]

§ 68.3 Definitions.

As used in this part:

Demarcation point (also point of interconnection). As used in this part, the point of demarcation and/or interconnection between the communications facilities of a provider of wireline telecommunications, and terminal equipment, protective apparatus or wiring at a subscriber's premises.

Essential telephones. Only coin-operated telephones, telephones provided for emergency use, and other telephones frequently needed for use by persons using such hearing aids.

Harm. Electrical hazards to the personnel of providers of wireline telecommunications, damage to the equipment of providers of wireline telecommunications, malfunction of the billing equipment of providers of wireline telecommunications, and degradation of service to persons other than the user of the subject terminal equipment, his calling or called party.

Hearing aid compatible. Except as used at §§ 68.4(a)(3) and 68.414, the terms hearing aid compatible or hearing aid compatibility are used as defined in § 68.316, unless it is specifically stated that hearing aid compatibility volume control, as defined in § 68.317, is intended or is included in the definition.

Inside wiring or premises wiring. Customer-owned or controlled wire on the subscriber's side of the demarcation point.

Premises. As used herein, generally a dwelling unit, other building or a legal unit of real property such as a lot on which a dwelling unit is located, as determined by the provider of telecommunications service's reasonable and nondiscriminatory standard operating practices.

Private radio services. Private land mobile radio services and other communications services characterized by the Commission in its rules as private radio services.

Public mobile services. Air-to-ground radiotelephone services, cellular radio telecommunications services, offshore radio, rural radio service, public land mobile telephone service, and other common carrier radio communications services covered by part 22 of Title 47 of the Code of Federal Regulations.

Responsible party. The party or parties responsible for the compliance of terminal equipment or protective circuitry intended for connection directly to the public switched telephone network with the applicable rules and regulations in this part and with the technical criteria published by the Administrative Council for Terminal Attachments. If a Telecommunications Certification Body certifies the terminal equipment, the responsible party is the holder of the certificate for that equipment. If the terminal equipment is the subject of a Supplier's Declaration of Conformity, the responsible party shall be: the manufacturer of the terminal equipment, or the manufacturer of protective circuitry that is marketed for use with terminal equipment that is not to be connected directly to the network, or if the equipment is imported, the importer, or if the terminal equipment is assembled from individual component parts, the assembler. If the equipment is modified by any party not working under the authority of the responsible party, the party performing the modifications, if located within the U.S., or the importer, if the equipment is imported subsequent to the modifications, becomes the new responsible party. Retailers or original equipment manufacturers may enter into an agreement with the assembler or importer to assume the responsibilities to ensure compliance of the terminal equipment and to become the responsible party.

Secure telephones. Telephones that are approved by the United States Government for the transmission of classified or sensitive voice communications.

Terminal equipment. As used in this part, communications equipment located on customer premises at the end of a communications link, used to permit the stations involved to accomplish the provision of telecommunications or information services.

[66 FR 7581, Jan. 24, 2001]

§ 68.4 Hearing aid-compatible telephones.

(a)(1) Except for telephones used with public mobile services, telephones used with private radio services, and cordless and secure telephones, every telephone manufactured in the United States (other than for export) or imported for use in the United States after August 16, 1989, must be hearing aid compatible, as defined in § 68.316. Every cordless telephone manufactured in the United States (other than for export) or imported into the United States after August 16, 1991, must be hearing aid compatible, as defined in § 68.316.

(2) Unless otherwise stated and except for telephones used with public mobile services, telephones used with private radio services and secure telephones, every telephone listed in § 68.112 must be hearing aid compatible, as defined in § 68.316.

(3) A telephone is hearing aid-compatible if it provides internal means for effective use with hearing aids that are designed to be compatible with telephones which meet established technical standards for hearing aid compatibility.

(4) The Commission shall revoke or otherwise limit the exemptions of paragraph (a)((1) of this section for telephones used with public mobile services or telephones used with private radio services if it determines that (i) such revocation or limitation is in the public interest; (ii) continuation of the exemption without such revocation or limitation would have an adverse effect on hearing-impaired individuals; (iii) compliance with the requirements of § 68.4(a)(1) is technologically feasible for the telephones to which the exemption applies; and (iv) compliance with the requirements of § 68.4(a)(1) would not increase costs to such an extent that the telephones to which the exemption applies could not be successfully marketed.

[54 FR 21430, May 18, 1989, as amended at 55 FR 28763, July 13, 1990; 57 FR 27183, June 18, 1992; 61 FR 42186, Aug. 14, 1996]

§ 68.5 Waivers.

The Commission may, upon the application of any interested person, initiate a proceeding to waive the requirements of § 68.4(a)(1) with respect to new telephones, or telephones associated with a new technology or service. The Commission shall not grant such a waiver unless it determines, on the basis of evidence in the record of such proceeding, that such telephones, or

such technology or service, are in the public interest, and that (a) compliance with the requirements of § 68.4(a)(1) is technologically infeasible, or (b) compliance with such requirements would increase the costs of the telephones, or of the technology or service, to such an extent that such telephones, technology, or service could not be successfully marketed. In any proceeding under this section to grant a waiver from the requirements of § 68.4(a)(1), the Commission shall consider the effect on hearing-impaired individuals of granting the waiver. The Commission shall periodically review and determine the continuing need for any waiver granted pursuant to this section.

[54 FR 21430, May 18, 1989]

§ 68.6 Telephones with volume control.

As of January 1, 2000, all telephones, including cordless telephones, as defined in § 15.3(j) of this chapter, manufactured in the United States (other than for export) or imported for use in the United States, must have volume control in accordance with § 68.317. Secure telephones, as defined by § 68.3 are exempt from this section, as are telephones used with public mobile services or private radio services.

[62 FR 43484, Aug. 14, 1997]

§ 68.7 Technical criteria for terminal equipment.

(a) Terminal equipment shall not cause harm, as defined in § 68.3, to the public switched telephone network.

(b) Technical criteria published by the Administrative Council for Terminal Attachments are the presumptively valid technical criteria for the protection of the public switched telephone network from harms caused by the connection of terminal equipment, subject to the appeal procedures in § 68.614 of this part.

[66 FR 7581, Jan. 24, 2001]

Subpart B—Conditions on Use of Terminal Equipment

§ 68.100 General.

In accordance with the rules and regulations in this part, terminal equipment may be directly connected to the public switched telephone network, including private line services provided over wireline facilities that are owned by providers of wireline telecommunications.

[66 FR 7581, Jan. 24, 2001]

§ 68.102 Terminal equipment approval requirement.

Terminal equipment must be approved in accordance with the rules and regulations in subpart C of this part, or connected through protective circuitry that is approved in accordance with the rules and regulations in subpart C.

[66 FR 7582, Jan. 24, 2001]

§ 68.105 Minimum point of entry (MPOE) and demarcation point.

(a) *Facilities at the demarcation point.* Carrier-installed facilities at, or constituting, the demarcation point shall consist of wire or a jack conforming to the technical criteria published by the Administrative Council for Terminal Attachments.

(b) *Minimum point of entry.* The ''minimum point of entry'' (MPOE) as used herein shall be either the closest practicable point to where the wiring crosses a property line or the closest practicable point to where the wiring enters a multiunit building or buildings. The reasonable and nondiscriminatory standard operating practices of the provider of wireline telecommunications services shall determine which shall apply. The provider of wireline telecommunications services is not precluded from establishing reasonable classifications of multiunit premises for purposes of determining which shall apply. Multiunit premises include, but are not limited to, residential, commercial, shopping center and campus situations.

(c) *Single unit installations.* For single unit installations existing as of August 13, 1990, and installations installed after that date the demarcation point shall be a point within 30 cm (12 in) of the protector or, where there is no protector, within 30 cm (12 in) of where the telephone wire enters the customer's premises, or as close thereto as practicable.

(d) *Multiunit installations.* (1) In multiunit premises existing as of August 13, 1990, the demarcation point shall be determined in accordance with the local carrier's reasonable and non-discriminatory standard operating practices. Provided, however, that where there are multiple demarcation points within the multiunit premises, a demarcation point for a customer shall not be further inside the customer's premises than a point twelve inches from where the wiring enters the customer's premises, or as close thereto as practicable.

(2) In multiunit premises in which wiring is installed, including major additions or rearrangements of wiring existing prior to that date, the provider of wireline telecommunications may place the demarcation point at the minimum point of entry (MPOE). If the provider of wireline telecommunications services does not elect to establish a practice of placing the demarcation point at the minimum point of entry, the multiunit premises owner shall determine the location of the demarcation point or points. The multiunit premises owner shall determine whether there shall be a single demarcation point location for all customers or separate such locations for each customer. Provided, however, that where there are multiple demarcation points within the multiunit premises, a demarcation point for a customer shall not be further inside the customer's premises than a point 30 cm (12 in) from where the wiring enters the customer's premises, or as close thereto as practicable. At the time of installation, the provider of wireline telecommunications services shall fully inform the premises owner of its options and rights regarding the placement of the demarcation point or points and shall not attempt to unduly influence that decision for the purpose of obstructing competitive entry.

(3) In any multiunit premises where the demarcation point is not already at the MPOE, the provider of wireline telecommunications services must comply with a request from the premises owner to relocate the demarcation point to the MPOE. The provider of wireline telecommunications services must negotiate terms in good faith and complete the negotiations within forty-five days from said request. Premises owners may file complaints with the Commission for resolution of allegations of bad faith bargaining by provider of wireline telecommunications services. *See* 47 U.S.C. 208; 47 CFR 1.720 through 1.736 (1999).

(4) The provider of wireline telecommunications services shall make available information on the location of the demarcation point within ten business days of a request from the premises owner. If the provider of wireline telecommunications services does not provide the information within that time, the premises owner may presume the demarcation point to be at the MPOE. Notwithstanding the provisions of § 68.110(c) of this part, provider of wireline telecommunications services must make this information freely available to the requesting premises owner.

(5) In multiunit premises with more than one customer, the premises owner may adopt a policy restricting a customer's access to wiring on the premises to only that wiring located in the customer's individual unit that serves only that particular customer.

[66 FR 7582, Jan. 24, 2001; 67 FR 60167, Sept. 25, 2002]

§ 68.106 Notification to provider of wireline telecommunications.

(a) *General.* Customers connecting terminal equipment or protective circuitry to the public switched telephone network shall, upon request of the provider of wireline telecommunications, inform the provider of wireline telecommunications of the particular line(s) to which such connection is made, and any other information required to be placed on the terminal equipment pursuant to § 68.354 of this part by the Administrative Council for Terminal Attachments.

(b) *Systems assembled of combinations of individually-approved terminal equipment and protective circuitry.* Customers connecting such assemblages to the public switched telephone network shall, upon the request of the provider of wireline telecommunications, provide to the provider of wireline telecommunications the following information:

For each line:

(1) Information required for compatible operation of the equipment with the communications facilities of the provider of wireline telecommunications;

(2) The identifying information required to be placed on terminal equipment pursuant to § 68.354 for all equipment dedicated to that line; and

(3) Any other information regarding equipment dedicated to that line required to be placed on the terminal equipment by the Administrative Council for Terminal Attachments.

(4) A list of identifying numbers required to be placed on terminal equipment, if any, by the Administrative Council for Terminal Attachments, pursuant to § 68.354 of this part, for equipment to be used in the system.

(c) *Systems using other than ''fully protected'' premises wiring.* Customers who intend to connect premises wiring other than ''fully protected'' premises wiring to the public switched telephone network shall, in addition to the foregoing, give notice to the provider of wireline telecommunications in accordance with § 68.215(e).

[66 FR 7582, Jan. 24, 2001]

§ 68.108 Incidence of harm.

Should terminal equipment, inside wiring, plugs and jacks, or protective circuitry cause harm to the public switched telephone network, or should the provider of wireline telecommunications reasonably determine that such harm is imminent, the provider of wireline telecommunications shall, where practicable, notify the customer that temporary discontinuance of service may be required; however, wherever prior notice is not practicable, the provider of wireline telecommunications may temporarily discontinue service forthwith, if such action is reasonable under the circumstances. In case of such temporary discontinuance, the provider of wireline telecommunications shall:

(a) Promptly notify the customer of such temporary discontinuance;

(b) Afford the customer the opportunity to correct the situation which gave rise to the temporary discontinuance; and

(c) Inform the customer of his right to bring a complaint to the Commission pursuant to the procedures set forth in subpart E of this part.

[55 FR 28630, July 12, 1990, as amended at 66 FR 7583, Jan. 24, 2001]

§ 68.110 Compatibility of the public switched telephone network and terminal equipment.

(a) *Availability of interface information.* Technical information concerning interface parameters not specified by the technical criteria published by the Administrative Council for Terminal Attachments, that are needed to permit terminal equipment to operate in a manner compatible with the communications facilities of a provider of wireline telecommunications, shall be provided by the provider of wireline telecommunications upon request.

(b) *Changes in the facilities, equipment, operations, or procedures of a provider of wireline telecommunications.* A provider of wireline telecommunications may make changes in its communications facilities, equipment, operations or procedures, where such action is reasonably required in the operation of its business and is not inconsistent with the rules and regulations in this part. If such changes can be reasonably expected to render any customer's terminal equipment incompatible with the communications facilities of the provider of wireline telecommunications, or require modification or alteration of such terminal equipment, or otherwise materially affect its use or performance, the customer shall be given adequate notice in writing, to allow the customer an opportunity to maintain uninterrupted service.

(c) *Availability of inside wiring information.* Any available technical information concerning wiring on the customer side of the demarcation point, including copies of existing schematic diagrams and service records, shall be provided by the provider of wireline telecommunications upon request of the building owner or agent thereof. The provider of wireline telecommunications may charge the building owner a reasonable fee for this service, which shall not exceed the cost involved in locating and copying the documents. In the alternative, the provider of

wireline telecommunications may make these documents available for review and copying by the building owner. In this case, the provider of wireline telecommunications may charge a reasonable fee, which shall not exceed the cost involved in making the documents available, and may also require the building owner to pay a deposit to guarantee the documents' return.

[66 FR 7583, Jan. 24, 2001]

§ 68.112 Hearing aid-compatibility.

(a) *Coin telephones.* All new and existing coin-operated telephones, whether located on public property or in a semi-public location (e.g., drugstore, gas station, private club).

(b) *Emergency use telephones.* Telephones ''provided for emergency use'' include the following:

(1) Telephones, except headsets, in places where a person with a hearing disability might be isolated in an emergency, including, but not limited to, elevators, highways, and tunnels for automobile, railway or subway, and workplace common areas.

NOTE TO PARAGRAPH (b)(1): Examples of workplace common areas include libraries, reception areas and similar locations where employees are reasonably expected to congregate.

(2) Telephones specifically installed to alert emergency authorities, including, but not limited to, police or fire departments or medical assistance personnel.

(3) Telephones, except headsets, in workplace non-common areas. Note: Examples of workplace non-common areas include private enclosed offices, open area individual work stations and mail rooms. Such non-common area telephones are required to be hearing aid compatible, as defined in § 68.316, by January 1, 2000, except for those telephones located in establishments with fewer than fifteen employees; and those telephones purchased between January 1, 1985 through December 31, 1989, which are not required to be hearing aid compatible, as defined in § 68.316, until January 1, 2005.

(i) Telephones, including headsets, made available to an employee with a hearing disability for use by that employee in his or her employment duty, shall, however, be hearing aid compatible, as defined in § 68.316.

(ii) As of January 1, 2000 or January 1, 2005, whichever date is applicable, there shall be a rebuttable presumption that all telephones located in the workplace are hearing aid compatible, as defined in § 68.316. Any person who identifies a telephone as non-hearing aid-compatible, as defined in § 68.316, may rebut this presumption. Such telephone must be replaced within fifteen working days with a hearing aid compatible telephone, as defined in § 68.316, including, on or after January 1, 2000, with volume control, as defined in § 68.317.

(iii) Telephones, not including headsets, except those headsets furnished under paragraph (b)(3)(i) of this section, that are purchased, or replaced with newly acquired telephones, must be:

(A) Hearing aid compatible, as defined in § 68.316, after October 23, 1996; and

(B) Include volume control, as defined in § 68.317, on or after January 1, 2000.

(iv) When a telephone under paragraph (b)(3)(iii) of this section is replaced with a telephone from inventory existing before October 23, 1996, any person may make a bona fide request that such telephone be hearing aid compatible, as defined in § 68.316. If the replacement occurs on or after January 1, 2000, the telephone must have volume control, as defined in § 68.317. The telephone shall be provided within fifteen working days.

(v) During the period from October 23, 1996, until the applicable date of January 1, 2000 or January 1, 2005, workplaces of fifteen or more employees also must provide and designate telephones for emergency use by employees with hearing disabilities through one or more of the following means:

(A) By having at least one coin-operated telephone, one common area telephone or one other designated hearing aid compatible telephone within a reasonable and accessible distance for an individual searching for a telephone from any point in the workplace; or

(B) By providing wireless telephones that meet the definition for hearing aid compatible for wireline telephones, as defined in § 68.316, for use by employees in their employment duty outside common areas and outside the offices of employees with hearing disabilities.

(4) All credit card operated telephones, whether located on public property or in a semipublic location (e.g., drugstore, gas station, private club), unless a hearing aid compatible (as defined in § 68.316) coin-operated telephone providing similar services is nearby and readily available. However, regardless of coin-operated telephone availability, all credit card operated telephones must be made hearing aid-compatible, as defined in § 68.316, when replaced, or by May 1, 1991, which ever comes sooner.

(5) Telephones needed to signal life threatening or emergency situations in confined settings, including but not limited to, rooms in hospitals, residential health care facilities for senior citizens, and convalescent homes:

(i) A telephone that is hearing aid compatible, as defined in § 68.316, is not required until:

(A) November 1, 1997, for establishments with fifty or more beds, unless replaced before that time; and

(B) November 1, 1998, for all other establishments with fewer than fifty beds, unless replaced before that time.

(ii) Telephones that are purchased, or replaced with newly acquired telephones, must be:

(A) Hearing aid compatible, as defined in § 68.116, after October 23, 1996; and

(B) Include volume control, as defined in § 68.317, on or after January 1, 2000.

(iii) Unless a telephone in a confined setting is replaced pursuant to paragraph (b)(5)(ii) of this section, a hearing aid compatible telephone shall not be required if:

(A) A telephone is both purchased and maintained by a resident for use in that resident's room in the establishment; or

(B) The confined setting has an alternative means of signalling life-threatening or emergency situations that is available, working and monitored.

(6) Telephones in hotel and motel guest rooms, and in any other establishment open to the general public for the purpose of overnight accommodation for a fee. Such telephones are required to be hearing aid compatible, as defined in § 68.316, except that, for establishments with eighty or more guest rooms, the telephones are not required to be hearing aid compatible, as defined in § 68.316, until November 1, 1998; and for establishments with fewer than eighty guest rooms, the telephones are not required to be hearing aid compatible, as defined in § 68.316, until November 1, 1999.

(i) Anytime after October 23, 1996, if a hotel or motel room is renovated or newly constructed, or the telephone in a hotel or motel room is replaced or substantially, internally repaired, the telephone in that room must be:

(A) Hearing aid compatible, as defined in § 68.316, after October 23, 1996; and

(B) Include volume control, as defined in § 68.317, on or after January 1, 2000.

(ii) The telephones in at least twenty percent of the guest rooms in a hotel or motel must be hearing aid compatible, as defined in § 68.316, as of April 1, 1997.

(iii) Notwithstanding the requirements of paragraph (b)(6) of this section, hotels and motels which use telephones purchased during the period January 1, 1985 through December 31, 1989 may provide telephones that are hearing aid compatible, as defined in § 68.316, in guest rooms according to the following schedule:

(A) The telephones in at least twenty percent of the guest rooms in a hotel or motel must be hearing aid compatible, as defined in § 68.316, as of April 1, 1997;

(B) The telephones in at least twenty-five percent of the guest rooms in a hotel or motel must be hearing aid compatible, as defined in § 68.316, by November 1, 1999; and

(C) The telephones in one-hundred percent of the guest rooms in a hotel or motel must be hearing aid compatible, as defined in § 68.316, by January 1, 2001 for establishments with eighty or more guest rooms, and by January 1, 2004 for establishments with fewer than eighty guest rooms.

(c) *Telephones frequently needed by the hearing impaired*. Closed circuit telephones, i.e., telephones which cannot directly access the public switched network, such as telephones located in lobbies of hotels or apartment buildings; telephones in stores which are used by patrons to order merchandise; telephones in public transportation terminals which are used to call taxis or to reserve rental automobiles, need not be hearing aid compatible, as defined in § 68.316, until replaced.

[49 FR 1362, Jan. 11, 1984, as amended at 55 FR 28763, July 13, 1990; 57 FR 27183, June 18, 1992; 61 FR 42186, Aug. 14, 1996; 61 FR 42392, Aug. 15, 1996; 62 FR 43484, Aug. 14, 1997; 62 FR 51064, Sep. 30, 1997]

§ 68.160 Designation of Telecommunication Certification Bodies (TCBs).

(a) The Commission may designate Telecommunication Certification Bodies (TCBs) to approve equipment as required under this part. Certification of equipment by a TCB shall be based on an application with all the information specified in this part. The TCB shall process the application to determine whether the product meets the Commission's requirements and shall issue a written grant of equipment authorization. The grant shall identify the TCB and the source of authority for issuing it.

(b) The Federal Communications Commission shall designate TCBs in the United States to approve equipment subject to certification under the Commission's rules. TCBs shall be accredited by the National Institute of Standards and Technology (NIST) under its National Voluntary Conformity Assessment Evaluation (NVCASE) program or other recognized programs based on ISO/IEC Guide 65, to comply with the Commission's qualification criteria for TCBs. NIST may, in accordance with its procedures, allow other appropriately qualified accrediting bodies to accredit TCBs and testing laboratories. TCBs shall comply with the requirements in § 68.162 of this part.

(c) In accordance with the terms of an effective bilateral or multilateral mutual recognition agreement or arrangement (MRA) to which the United States is a party, bodies outside the United States shall be permitted to authorize equipment in lieu of the Commission. A body in an MRA partner economy may authorize equipment to U.S. requirements only if that economy permits bodies in the United States to authorize equipment to its requirements. The authority designating these telecommunication certification bodies shall meet the following criteria.

(1) The organization accrediting the prospective telecommunication certification body shall be capable of meeting the requirements and conditions of ISO/IEC Guide 61.

(2) The organization assessing the telecommunication certification body shall appoint a team of qualified experts to perform the assessment covering all of the elements within the scope of accreditation. For assessment of telecommunications equipment, the areas of expertise to be used during the assessment shall include, but not be limited to, electromagnetic compatibility and telecommunications equipment (wired and wireless).

[64 FR 4997, Feb. 2, 1999]

§ 68.162 Requirements for Telecommunication Certification Bodies.

(a) Telecommunication certification bodies (TCBs) designated by the Commission, or designated by another authority pursuant to an effective mutual recognition agreement or arrangement to which the United States is a party, shall comply with the following requirements.

(b) *Certification methodology*. (1) The certification system shall be based on type testing as identified in sub-clause 1.2(a) of ISO/IEC Guide 65.

(2) Certification shall normally be based on testing no more than one unmodified representative sample of each product type for which certification is sought. Additional samples may be requested if clearly warranted, such as when certain tests are likely to render a sample inoperative.

(c) *Criteria for designation*. (1) To be designated as a TCB under this section, an entity shall, by means of accreditation, meet all the appropriate specifications in ISO/IEC Guide 65 for the scope of equipment it will certify. The

accreditation shall specify the group of equipment to be certified and the applicable regulations for product evaluation.

(2) The TCB shall demonstrate expert knowledge of the regulations for each product with respect to which the body seeks designation. Such expertise shall include familiarity with all applicable technical regulations, administrative provisions or requirements, as well as the policies and procedures used in the application thereof.

(3) The TCB shall have the technical expertise and capability to test the equipment it will certify and shall also be accredited in accordance with ISO/IEC Guide 25 to demonstrate it is competent to perform such tests.

(4) The TCB shall demonstrate an ability to recognize situations where interpretations of the regulations or test procedures may be necessary. The appropriate key certification and laboratory personnel shall demonstrate a knowledge of how to obtain current and correct technical regulation interpretations. The competence of the telecommunication certification body shall be demonstrated by assessment. The general competence, efficiency, experience, familiarity with technical regulations and products included in those technical regulations, as well as compliance with applicable parts of the ISO/IEC Guides 25 and 65, shall be taken into consideration.

(5) A TCB shall participate in any consultative activities, identified by the Commission or NIST, to facilitate a common understanding and interpretation of applicable regulations.

(6) The Commission will provide public notice of specific elements of these qualification criteria that will be used to accredit TCBs.

(d) *Sub-contractors*. (1) In accordance with the provisions of sub-clause 4.4 of ISO/IEC Guide 65, the testing of a product, or a portion thereof, may be performed by a sub-contractor of a designated TCB, provided the laboratory has been assessed by the TCB as competent and in compliance with the applicable provisions of ISO/IEC Guide 65 and other relevant standards and guides.

(2) When a subcontractor is used, the TCB shall be responsible for the test results and shall maintain appropriate oversight of the subcontractor to ensure reliability of the test results. Such oversight shall include periodic audits of products that have been tested.

(e) *Designation of TCBs*. (1) The Commission will designate as a TCB any organization that meets the qualification criteria and is accredited by NIST or its recognized accreditor.

(2) The Commission will withdraw the designation of a TCB if the TCB's accreditation by NIST or its recognized accreditor is withdrawn, if the Commission determines there is just cause for withdrawing the designation, or if the TCB requests that it no longer hold the designation. The Commission will provide a TCB with 30 days notice of its intention to withdraw the designation and provide the TCB with an opportunity to respond.

(3) A list of designated TCBs will be published by the Commission.

(f) *Scope of responsibility*. (1) TCBs shall certify equipment in accordance with the Commission's rules and policies.

(2) A TCB shall accept test data from any source, subject to the requirements in ISO/IEC Guide 65, and shall not unnecessarily repeat tests.

(3) TCBs may establish and assess fees for processing certification applications and other tasks as required by the Commission.

(4) A TCB may rescind a grant of certification within 30 days of grant for administrative errors. After that time, a grant can only be revoked by the Commission. A TCB shall notify both the applicant and the Commission when a grant is rescinded.

(5) A TCB may not:

(i) Grant a waiver of Commission rules or technical criteria published by the Administrative Council, or certify equipment for which Commission rules or requirements, or technical criteria do not exist, or for which the application of the rules or requirements, or technical criteria is unclear.

(ii) Take enforcement actions.

(6) All TCB actions are subject to Commission review.

(g) *Post-certification requirements*. (1) A Telecommunications Certification

Body shall supply a copy of each approved application form and grant of certification to the Administrative Council for Terminal Attachments.

(2) In accordance with ISO/IEC Guide 65, a TCB is required to conduct appropriate surveillance activities. These activities shall be based on type testing a few samples of the total number of product types which the certification body has certified. Other types of surveillance activities of a product that has been certified are permitted, provided they are no more onerous than testing type. The Commission may at any time request a list of products certified by the certification body and may request and receive copies of product evaluation reports. The Commission may also request that a TCB perform post-market surveillance, under Commission guidelines, of a specific product it has certified.

(3) If during post market surveillance of a certified product, a certification body determines that a product fails to comply with the applicable technical regulations, the certification body shall immediately notify the grantee and the Commission. A follow-up report shall also be provided within thirty days of the action taken by the grantee to correct the situation.

(4) Where concerns arise, the TCB shall provide a copy of the application file to the Commission within 30 calendar days of a request for the file made by the Commission to the TCB and the manufacturer. Where appropriate, the file should be accompanied by a request for confidentiality for any material that may qualify for confidential treatment under the Commission's Rules. If the application file is not provided within 30 calendar days, a statement shall be provided to the Commission as to why it cannot be provided.

(h) In case of a dispute with respect to designation or recognition of a TCB and the testing or certification of products by a TCB, the Commission will be the final arbiter. Manufacturers and designated TCBs will be afforded at least 30 days to comment before a decision is reached. In the case of a TCB designated or recognized, or a product certified pursuant to an effective bilateral or multilateral mutual recognition agreement or arrangement (MRA) to which the United States is a party, the Commission may limit or withdraw its recognition of a TCB designated by an MRA party and revoke the certification of products using testing or certification provided by such a TCB. The Commission shall consult with the Office of the United States Trade Representative (USTR), as necessary, concerning any disputes arising under an MRA for compliance with under the Telecommunications Trade Act of 1988 (Section 1371–1382 of the Omnibus Trade and Competitiveness Act of 1988).

[64 FR 4998, Feb. 2, 1999, as amended at 66 FR 27601, May 18, 2001; 67 FR 57182, Sept. 9, 2002]

Subpart C—Terminal Equipment Approval Procedures

§ 68.201 Connection to the public switched telephone network.

Terminal equipment may not be connected to the public switched telephone network unless it has either been certified by a Telecommunications Certification Body or the responsible party has followed all the procedures in this subpart for Supplier's Declaration of Conformity.

[66 FR 7583, Jan. 24, 2001]

§ 68.211 Terminal equipment approval revocation procedures.

(a) *Causes for revocation.* The Commission may revoke the interconnection authorization of terminal equipment, whether that authorization was acquired through certification by a Telecommunications Certification Body or through the Supplier's Declaration of Conformity process in §§ 68.320 through 68.350 of this part, where:

(1) The equipment approval is shown to have been obtained by misrepresentation;

(2) The approved equipment is shown to cause harms to the public switched telephone network, as defined in § 68.3;

(3) The responsible party willfully or repeatedly fails to comply with the terms and conditions of its equipment approval; or

(4) The responsible party willfully or repeatedly fails to comply with any rule, regulation or order issued by the

Commission under the Communications Act of 1934 relating to terminal equipment.

(b) *Notice of intent to revoke interconnection authority.* Before revoking interconnection authority under the provisions of this section, the Commission, or the Enforcement Bureau under delegated authority, will issue a written Notice of Intent to Revoke Part 68 Interconnection Authority, or a Joint Notice of Apparent Liability for Forfeiture and Notice of Intent to Revoke Part 68 Interconnection Authority pursuant to §§ 1.80 and 1.89 of this chapter.

(c) *Delivery.* The notice will be sent via certified mail to the responsible party for the terminal equipment at issue at the address provided to the Administrative Council for Terminal Attachments.

(d) *Reauthorization.* A product that has had its approval revoked may not be authorized for connection to the public switched telephone network for a period of six months from the date of revocation of the approval.

(e) *Reconsideration or appeal.* A responsible party of terminal equipment that has had its authorization revoked and/or that has been assessed a forfeiture may request reconsideration or make administrative appeal of the decision pursuant to part 1 of the Commission's rules: Practice and Procedure, part 1 of this chapter.

[66 FR 7583, Jan. 24, 2001, as amended at 67 FR 13229, Mar. 21, 2002; 68 FR 13850, Mar. 21, 2003]

§ 68.213 Installation of other than "fully protected" non-system simple customer premises wiring.

(a) *Scope of this rule.* Provisions of this rule apply only to ''unprotected'' premises wiring used with simple installations of wiring for up to four line residential and business telephone service. More complex installations of wiring for multiple line services, for use with systems such as PBX and key telephone systems, are controlled by § 68.215 of these rules.

(b) *Wiring authorized.* Unprotected premises wiring may be used to connect units of terminal equipment or protective circuitry to one another, and to carrier-installed facilities if installed in accordance with these rules. The provider of wireline telecommunications is not responsible, except pursuant to agreement between it and the customer or undertakings by it, otherwise consistent with Commission requirements, for installation and maintenance of wiring on the subscriber's side of the demarcation point, including any wire or jacks that may have been installed by the carrier. The subscriber and/or premises owner may install wiring on the subscriber's side of the demarcation point, and may remove, reconfigure, and rearrange wiring on that side of the demarcation point including wiring and wiring that may have been installed by the carrier. The customer or premises owner may not access carrier wiring and facilities on the carrier's side of the demarcation point. Customers may not access the protector installed by the provider of wireline telecommunications. All plugs and jacks used in connection with inside wiring shall conform to the published technical criteria of the Administrative Council for Terminal Attachments. In multiunit premises with more than one customer, the premises owner may adopt a policy restricting a customer's access to wiring on the premises to only that wiring located in the customer's individual unit wiring that serves only that particular customer. See § 68.105 in this part. The customer or premises owner may not access carrier wiring and facilities on the carrier's side of the demarcation point. Customers may not access the protector installed by the provider of wireline telecommunications. All plugs and jacks used in connection with inside wiring shall conform to the published technical criteria of the Administrative Council for Terminal Attachments.

(c) Material requirements. (1) For new installations and modifications to existing installations, copper conductors shall be, at a minimum, solid, 24 gauge or larger, twisted pairs that comply with the electrical specifications for Category 3, as defined in the ANSI EIA/TIA Building Wiring Standards.

(2) Conductors shall have insulation with a 1500 Volt rms minimum breakdown rating. This rating shall be established by covering the jacket or sheath

with at least 15 cm (6 inches) (measured linearly on the cable) of conductive foil, and establishing a potential difference between the foil and all of the individual conductors connected together, such potential difference gradually increased over a 30 second time period to 1500 Volts rms, 60 Hertz, then applied continuously for one minute. At no time during this 90 second time interval shall the current between these points exceed 10 milliamperes peak.

(3) All wire and connectors meeting the requirements set forth in paragraphs (c)(1) and (c)(2) shall be marked, in a manner visible to the consumer, with the symbol ''CAT 3'' or a symbol consisting of a ''C'' with a ''3'' contained within the ''C'' character, at intervals not to exceed one foot (12 inches) along the length of the wire.

(d) *Attestation*. Manufacturers (or distributors or retailers, whichever name appears on the packaging) of non-system telephone premises wire shall attest in a letter to the Commission that the wire conforms with part 68, FCC Rules.

[49 FR 21734, May 23, 1984, as amended at 50 FR 29392, July 19, 1985; 50 FR 47548, Nov. 19, 1985; 51 FR 944, Jan. 9, 1986; 55 FR 28630, July 12, 1990; 58 FR 44907, Aug. 25, 1993; 62 FR 36464, July 8, 1997; 65 FR 4140, Jan. 26, 2000; 66 FR 7583, Jan. 24, 2001]

§ 68.214 Changes in other than "fully protected" premises wiring that serves fewer than four subscriber access lines.

Operations associated with the installation, connection, reconfiguration and removal (other than final removal) of premises wiring that serves fewer than four subscriber access lines must be performed as provided in § 68.215(c) if the premises wiring is not ''fully protected.'' For this purpose, the supervisor and installer may be the same person.

[66 FR 7584, Jan. 24, 2001]

§ 68.215 Installation of other than "fully protected" system premises wiring that serves more than four subscriber access lines.

(a) *Types of wiring authorized*—(1) *Between equipment entities*. Unprotected premises wiring, and protected premises wiring requiring acceptance testing for imbalance, may be used to connect separately-housed equipment entities to one another.

(2) *Between an equipment entity and the public switched telephone network interface(s)*. Fully-protected premises wiring shall be used to connect equipment entities to the public switched telephone network interface unless the provider of wireline telecommunications is unwilling or unable to locate the interface within 7.6 meters (25 feet) of the equipment entity on reasonable request. In any such case, other than fully-protected premises wiring may be used if otherwise in accordance with these rules.

(3) *Hardware protection as part of the facilities of the provider of wireline telecommunications*. In any case where the carrier chooses to provide (and the customer chooses to accept, except as authorized under paragraph (g) of this section), hardware protection on the network side of the interface(s), the presence of such hardware protection will affect the classification of premises wiring for the purposes of § 68.215, as appropriate.

(b) *Installation personnel*. Operations associated with the installation, connection, reconfiguration and removal (other than final removal of the entire premises communications system) of other than fully-protected premises wiring shall be performed under the supervision and control of a supervisor, as defined in paragraph (c) of this section. The supervisor and installer may be the same person.

(c) *Supervision*. Operations by installation personnel shall be performed under the responsible supervision and control of a person who:

(1) Has had at least six months of on-the-job experience in the installation of telephone terminal equipment or of wiring used with such equipment;

(2) Has been trained by the registrant of the equipment to which the wiring is to be connected in the proper performance of any operations by installation personnel which could affect that equipment's continued compliance with these rules;

(3) Has received written authority from the registrant to assure that the operations by installation personnel

will be performed in such a manner as to comply with these rules.

(4) Or, in lieu of paragraphs (c) (1) through (3) of this section, is a licensed professional engineer in the jurisdiction in which the installation is performed.

(d) *Workmanship and material requirements*—(1) *General*. Wiring shall be installed so as to assure that there is adequate insulation of telephone wiring from commercial power wiring and grounded surfaces. Wiring is required to be sheathed in an insulating jacket in addition to the insulation enclosing individual conductors (see below) unless located in an equipment enclosure or in an equipment room with restricted access; it shall be assured that this physical and electrical protection is not damaged or abraded during placement of the wiring. Any intentional removal of wiring insulation (or a sheath) for connections or splices shall be accomplished by removing the *minimum* amount of insulation necessary to make the connection or splice, and insulation equivalent to that provided by the wire and its sheath shall be suitably restored, either by placement of the splices or connections in an appropriate enclosure, or equipment rooms with restricted access, or by using adequately-insulated connectors or splicing means.

(2) *Wire*. Insulated conductors shall have a jacket or sheath with a 1500 volt rms minimum breakdown rating, except when located in an equipment enclosure or an equipment room with restricted access. This rating shall be established by covering the jacket or sheath with at least 15 cm (6 in) (measured linearly on the cable) of conductive foil, and establishing a potential difference between the foil and all of the individual conductors connected together, such potential difference gradually increased over a 30 second time period to 1500 volts rms, 60 Hertz, then applied continuously for one minute. At no time during this 90 second time interval shall the current between these points exceed 10 milliamperes peak.

(3) *Places where the jacket or sheath has been removed*. Any point where the jacket or sheath has been removed (or is not required) shall be accessible for inspection. If such points are concealed, they shall be accessible without disturbing permanent building finish (e.g., by removing a cover).

(4) *Building and electrical codes*. All building and electrical codes applicable in the jurisdiction to telephone wiring shall be complied with. If there are no such codes applicable to telephone wiring, Article 800 of the 1978 National Electrical Code, entitled Communications Systems, and other sections of that Code incorporated therein by reference shall be complied with.

(5) *Limitations on electrical signals*. Only signal sources that emanate from the provider of wireline telecommunications central office, or that are generated in equipment at the customer's premises and are ''non-hazardous voltage sources'' as defined in the technical criteria published by the Administrative Council for Terminal Attachments, may be routed in premises telephone wiring, except for voltages for network control signaling and supervision that are consistent with standards employed by the provider of wireline telecommunications. Current on individual wiring conductors shall be limited to values which do not cause an excessive temperature rise, with due regard to insulation materials and ambient temperatures. The following table assumes a 45 °C temperature rise for wire sizes 22 AWG or larger, and a 40 °C rise for wire sizes smaller than 22 AWG, for poly-vinyl chloride insulating materials, and should be regarded as establishing *maximum* values to be derated accordingly in specific installations where ambient temperatures are in excess of 25 °C:

MAXIMUM CONTINUOUS CURRENT CAPACITY OF PVC INSULATED COPPER WIRE, CONFINED

Wire size, AWG	Circular mils	Maximum current, amperes
32	63.2	0.32
30	100.5	0.52
28	159.8	0.83
26	254.1	1.3
24	404.0	2.1
22	642.4	5.0
20	1022	7.5
18	1624	10

NOTE: The total current in all conductors of multiple conductor cables may not exceed 20% of the sum of the individual ratings of all such conductors.

(6) *Physical protection.* In addition to the general requirements that wiring insulation be adequate and not damaged during placement of the wiring, wiring shall be protected from adverse effects of weather and the environment in which it is used. Where wiring is attached to building finish surfaces (surface wiring), it shall be suitably supported by means which do not affect the integrity of the wiring insulation.

(e) *Documentation requirements.* A notarized affidavit and one copy thereof shall be prepared by the installation supervisor in advance of each operation associated with the installation, connection, reconfiguration and removal of other than fully-protected premises wiring (except when accomplished functionally using a cross-connect panel), except when involved with removal of the entire premises communications system using such wiring. This affidavit and its copy shall contain the following information:

(1) The responsible supervisor's full name, business address and business telephone number.

(2) The name of the registrant(s) (or manufacturer(s), if grandfathered equipment is involved) of any equipment to be used electrically between the wiring and the telephone network interface, which does not contain inherent protection against hazardous voltages and longitudinal imbalance.

(3) A statement as to whether the supervisor complies with § 68.215(c). Training and authority under § 68.215(c)(2)–(3) is required from the registrant (or manufacturer, if grandfathered equipment is involved) of the first piece of equipment electrically connected to the telephone network interface, other than passive equipments such as extensions, cross-connect panels, or adapters. In general, this would be the registrant (or manufacturer) of a system's common equipment.

(4) The date(s) when placement and connection of the wiring will take place.

(5) The business affiliation of the installation personnel.

(6) Identification of specific national and local codes which will be adhered to.

(7) The manufacturer(s); a brief description of the wire which will be used (model number or type); its conformance with recognized standards for wire if any (e.g., Underwriters Laboratories listing, Rural Electrification Administration listing, ''KS-'' specification, etc.); and a general description of the attachment of the wiring to the structure (e.g., run in conduit or ducts exclusively devoted to telephone wiring, ''fished'' through walls, surface attachment, etc.).

(8) The date when acceptance testing for imbalance will take place.

(9) The supervisor's signature. The notarized original shall be submitted to the provider of wireline telecommunications at least ten calendar days in advance of the placement and connection of the wiring. This time period may be changed by agreement of the provider of wireline telecommunications and the supervisor. The copy shall be maintained at the premises, available for inspection, so long as the wiring is used for telephone service.

(f) *Acceptance testing for imbalance.* Each telephone network interface that is connected directly or indirectly to other than fully-protected premises wiring shall be subjected to the acceptance test procedures specified in this section whenever an operation associated with the installation, connection, reconfiguration or removal of this wiring (other than final removal) has been performed.

(1) *Test procedure for two-way or outgoing lines or loops.* A telephone instrument may be associated directly or indirectly with the line or loop to perform this test if one is not ordinarily available to it:

(i) Lift the handset of the telephone instrument to create the off-hook state on the line or loop under test.

(ii) Listen for noise. Confirm that there is neither audible hum nor excessive noise.

(iii) Listen for dial tone. Confirm that dial tone is present.

(iv) Break dial tone by dialing a digit. Confirm that dial tone is broken as a result of dialing.

(v) With dial tone broken, listen for audible hum or excessive noise. Confirm that there is neither audible hum nor excessive noise.

(2) *Test procedure for incoming-only (non-originating) lines or loops.* A telephone instrument may be associated directly or indirectly with the line or loop to perform this test if one is not ordinarily available to it:

(i) Terminate the line or loop under test in a telephone instrument in the on-hook state.

(ii) Dial the number of the line or loop under test from another station, blocking as necessary other lines or loops to cause the line or loop under test to be reached.

(iii) On receipt of ringing on the line or loop under test, lift the handset of the telephone instrument to create the off-hook state on that line or loop.

(iv) Listen for audible hum or excessive noise. Confirm that there is neither audible hum nor excessive noise.

(3) *Failure of acceptance test procedures.* Absence of dial tone before dialing, inability to break dial tone, or presence of audible hum or excessive noise (or any combination of these conditions) during test of two-way or outgoing lines or loops indicates failure. Inability to receive ringing, inability to break ringing by going off-hook, or presence of audible hum or excessive noise (or any combination of these conditions) during test of incoming-only lines or loops indicates failure. Upon any such failure, the failing equipment or portion of the premises communications system shall be disconnected from the network interface, and may not be reconnected until the cause of the failure has been isolated or removed. Any previously tested lines or loops shall be retested if they were in any way involved in the isolation and removal of the cause of the failure.

(4) *Monitoring or participation in acceptance testing by the provider of wireline telecommunications.* The provider of wireline telecommunications may monitor or participate in the acceptance testing required under this section, in accordance with § 68.215(g) of this part, from its central office test desk or otherwise.

(g) *Extraordinary procedures.* The provider of wireline communications is hereby authorized to limit the subscriber's right of connecting approved terminal equipment or protective circuitry with other than fully-protected premises wiring, but solely in accordance with this paragraph and § 68.108 of these rules.

(1)(i) *Conditions that may invoke these procedures.* The extraordinary procedures authorized herein may only be invoked where one or more of the following conditions is present:

(A) Information provided in the supervisor's affidavit gives reason to believe that a violation of part 68 of the FCC's rules is likely.

(B) A failure has occurred during acceptance testing for imbalance.

(C) Harm has occurred, and there is reason to believe that this harm was a result of wiring operations performed under this section.

(ii) The extraordinary procedures authorized in the following subsections shall not be used so as to discriminate between installations by provider of wireline telecommunications personnel and installations by others. In general, this requires that any charges for these procedures be levied in accordance with, or analogous to, the ''maintenance of service'' tariff provisions: If the installation proves satisfactory, no charge should be levied.

(2) *Monitoring or participation in acceptance testing for imbalance.* Notwithstanding the previous sub-section, the provider of wireline telecommunications may monitor or participate in acceptance testing for imbalance at the time of the initial installation of wiring in the absence of the conditions listed therein; at any other time, on or more of the listed conditions shall be present. Such monitoring or participation in acceptance testing should be performed from the central office test desk where possible to minimize costs.

(3) *Inspection.* Subject to paragraph (g)(1) of this section, the provider of wireline telecommunications may inspect wiring installed pursuant to this section, and all of the splicing and connection points required to be accessible by § 68.215(d)(3) to determine compliance with this section. The user or installation supervisor shall either authorize the provider of wireline telecommunications to render the splicing and inspection points visible (e.g., by

removing covers), or perform this action prior to the inspection. To minimize disruption of the premises communications system, the right of inspecting is limited as follows:

(i) During initial installation of wiring:

(A) The provider of wireline telecommunications may require withdrawal of up to 5 percent (measured linearly) of wiring run concealed in ducts, conduit or wall spaces, to determine conformance of the wiring to the information furnished in the affidavit.

(B) In the course of any such inspection, the provider of wireline telecommunications shall have the right to inspect documentation required to be maintained at the premises under § 68.215(e).

(ii) After failure of acceptance testing or after harm has resulted from installed wiring: The provider of wireline telecommunications may require withdrawal of all wiring run concealed in ducts, conduit or wall spaces which reasonably could have caused the failure or harm, to determine conformance of the wiring to the information furnished in the affidavit.

(iii) In the course of any such inspection, the provider of wireline telecommunications shall have the right to inspect documentation required to be maintained at the premises under § 68.215(e).

(4) *Requiring the use of protective apparatus.* In the event that any of the conditions listed in paragraph (g)(1) of this section, arises, and is not permanently remedied within a reasonable time period, the provider of wireline telecommunications may require the use of protective apparatus that either protects solely against hazardous voltages, or that protects both against hazardous voltages and imbalance. Such apparatus may be furnished either by the provider of wireline telecommunications or by the customer. This right is in addition to the rights of the provider of wireline telecommunications under § 68.108.

(5) *Notice of the right to bring a complaint.* In any case where the provider of wireline telecommunications invokes the extraordinary procedures of § 68.215(g), it shall afford the customer the opportunity to correct the situation that gave rise to invoking these procedures, and inform the customer of the right to bring a complaint to the Commission pursuant to the procedures set forth in subpart E of this part. On complaint, the Commission reserves the right to perform any of the inspections authorized under this section, and to require the performance of acceptance tests.

(h) *Limitations on the foregoing if protected wiring requiring acceptance testing is used.* If protected wiring is used which required acceptance testing, the requirements in the foregoing paragraphs of § 68.215 are hereby limited, as follows:

(1) *Supervision.* Section 68.215(c)(2)–(3) are hereby waived. The supervisor is only required to have had at least six months of on-the-job experience in the installation of telephone terminal equipment or of wiring used with such equipment.

(2) *Extraordinary procedures.* Section 68.215(g)(3) is hereby limited to allow for inspection of exposed wiring and connection and splicing points, but not for requiring the withdrawal of wiring from wiring run concealed in ducts, conduit or wall spaces unless actual harm has occurred, or a failure of acceptance testing has not been corrected within a reasonable time. In addition, § 68.215(g)(4) is hereby waived.

[43 FR 16499, Apr. 19, 1978, as amended at 44 FR 7958, Feb. 8, 1979; 47 FR 37896, Aug. 27, 1982; 49 FR 21735, May 23, 1984; 58 FR 44907, Aug. 25, 1993; 66 FR 7584, Jan. 24, 2001]

§ 68.218 Responsibility of the party acquiring equipment authorization.

(a) In acquiring approval for terminal equipment to be connected to the public switched telephone network, the responsible party warrants that each unit of equipment marketed under such authorization will comply with all applicable rules and regulations of this part and with the applicable technical criteria of the Administrative Council for Terminal Attachments.

(b) The responsible party or its agent shall provide the user of the approved terminal equipment the following:

(1) Consumer instructions required to be included with approved terminal equipment by the Administrative Council for Terminal Attachments;

(2) For a telephone that is not hearing aid-compatible, as defined in § 68.316 of these rules:

(i) Notice that FCC rules prohibit the use of that handset in certain locations; and

(ii) A list of such locations (see § 68.112).

(c) When approval is revoked for any item of equipment, the responsible party must take all reasonable steps to ensure that purchasers and users of such equipment are notified to discontinue use of such equipment.

[66 FR 7585, Jan. 24, 2001]

§ 68.224 Notice of non-hearing aid compatibility.

Every non-hearing aid compatible telephone offered for sale to the public on or after August 17, 1989, whether previously-registered, newly registered or refurbished shall:

(a) Contain in a conspicuous location on the surface of its packaging a statement that the telephone is not hearing aid compatible, as is defined in §§ 68.4(a)(3) and 68.316, or if offered for sale without a surrounding package, shall be affixed with a written statement that the telephone is not hearing aid-compatible, as defined in §§ 68.4(a)(3) and 68.316; and

(b) Be accompanied by instructions in accordance with § 68.218(b)(5) of the rules.

[54 FR 21431, May 18, 1989, as amended at 61 FR 42187, Aug. 14, 1996]

Subpart D—Conditions for Terminal Equipment Approval

AUTHORITY: Secs. 4, 5, 303, 48 Stat., as amended, 1066, 1068, 1082 (47 U.S.C. 154, 155, 303).

SOURCE: 45 FR 20853, Mar. 31, 1980, unless otherwise noted.

§ 68.300 Labeling requirements.

(a) Terminal equipment approved as set out in this part must be labeled in accordance with the requirements published by the Administrative Council for Terminal Attachments and with requirements of this part for hearing aid compatibility and volume control.

(b) As of April 1, 1997, all registered telephones, including cordless telephones, as defined in § 15.3(j) of this chapter, manufactured in the United States (other than for export) or imported for use in the United States, that are hearing aid compatible, as defined in § 68.316, shall have the letters ''HAC'' permanently affixed thereto. ''Permanently affixed'' shall be defined as in paragraph (b)(5) of this section. Telephones used with public mobile services or private radio services, and secure telephones, as defined by § 68.3, are exempt from this requirement.

[62 FR 61664, Nov. 19, 1997, as amended at 64 FR 3048, Jan. 20, 1999; 66 FR 7585, Jan. 24, 2001]

§ 68.316 Hearing aid compatibility: Technical requirements.

A telephone handset is hearing aid compatible for the purposes of this section if it complies with the following standard, published by the Telecommunications Industry Association, copyright 1983, and reproduced by permission of the Telecommunications Industry Association:

ELECTRONIC INDUSTRIES ASSOCIATION RECOMMENDED STANDARD RS–504 MAGNETIC FIELD INTENSITY CRITERIA FOR TELEPHONE COMPATIBILITY WITH HEARING AIDS

[*Prepared by EIA Engineering Committee TR–41 and the Hearing Industries Association's Standards and Technical Committee*]

TABLE OF CONTENTS

List of Illustrations

1 INTRODUCTION
2 SCOPE
3 DEFINITIONS
4 TECHNICAL REQUIREMENTS
4.1 General
4.2 Axial Field Intensity
4.3 Radial Field Intensity
4.4 Induced Voltage Frequency Response
Appendix A—Bibliography

List of Illustrations

Figure Number

1 Reference and Measurement Planes and Axes
2 Measurement Block Diagram
3 Probe Coil Parameters
4A Induced Voltage Frequency Response for receivers with an axial field that exceeds −19 dB
4B Induced Voltage Frequency Response for receivers with an axial field that exceeds −22 dB but is less than −19 dB

Magnetic Field Intensity Criteria for Telephone Compatibility With Hearing Aids

(From EIA Standards Proposal No. 1652, formulated under the cognizance of EIA TR–41 Committee on Voice Telephone Terminals and the Hearing Industries Association's Standards and Technical Committee.)

1 Introduction

Hearing-aid users have used magnetic coupling to enable them to participate in telephone communications since the 1940's. Magnetic pick-ups in hearing-aids have provided for coupling to many, but not all, types of telephone handsets. A major reason for incompatibility has been the lack of handset magnetic field intensity requirements. Typically, whatever field existed had been provided fortuitously rather than by design. More recently, special handset designs, e.g., blue grommet handsets associated with public telephones, have been introduced to provide hearing-aid coupling and trials were conducted to demonstrate the acceptability of such designs. It is anticipated that there will be an increase in the number of new handset designs in the future. A standard definition of the magnetic field intensity emanating from telephone handsets intended to provide hearing-aid coupling is needed so that hearing-aid manufacturers can design their product to use this field, which will be guaranteed in handsets which comply with this standard.

1.1 This standard is one of a series of technical standards on voice telephone terminal equipment prepared by EIA Engineering Committee TR–41. This document, with its companion standards on Private Branch Exchanges (PBX), Key Telephone Systems (KTS), Telephones and Environmental and Safety Considerations (Refs: A1, A2, A3 and A4) fills a recognized need in the telephone industry brought about by the increasing use in the public telephone network of equipment supplied by numerous manufacturers. It will be useful to anyone engaged in the manufacture of telephone terminal equipment and hearing-aids and to those purchasing, operating or using such equipment or devices.

1.2 This standard is intended to be a living document, subject to revision and updating as warranted by advances in network and terminal equipment technology and changes in the FCC Rules and Regulations.

2 Scope

2.1 The purpose of this document is to establish formal criteria defining the magnetic field intensity presented by a telephone to which hearing aids can couple. The requirements are based on present telecommunications plant characteristics at the telephone interface. The telephone will also be subject to the applicable requirements of EIA RS–470, Telephone Instruments with Loop Signaling for Voiceband Applications (Ref: A3) and the environmental requirements specified in EIA Standards Project PN–1361, Environmental and Safety Considerations for Voice Telephone Terminals, when published (Ref: A4).

Telephones which meet these requirements should ensure satisfactory service to users of magnetically coupled hearing-aids in a high percentage of installations, both initially and over some period of time, as the network grows and changes occur in telephone serving equipment. However, due to the wide range of customer apparatus and loop plant and dependent on the environment in which the telephone and hearing aid are used, conformance with this standard does not guarantee acceptable performance or interface compatibility under all possible operating conditions.

2.2 A telephone complies with this standard if it meets the requirements in this standard when manufactured and can be expected to continue to meet these requirements when properly used and maintained. For satisfactory service a telephone needs to be capable, through the proper selection of equipment options, of satisfying the requirements applicable to its marketing area.

2.3 The standard is intended to be in conformance with part 68 of the FCC Rules and Regulations, but it is not limited to the scope of those rules (Ref: A5).

2.4 The signal level and method of measurement in this standard have been chosen to ensure reproducible results and permit comparison of evaluations. The measured magnetic field intensity will be approximately 15 dB above the average level encountered in the field and the measured high-end frequency response will be greater than that encountered in the field.

2.5 The basic accuracy and reproducibility of measurements made in accordance with this standard will depend primarily upon the accuracy of the test equipment used, the care with which the measurements are conducted, and the inherent stability of the devices under test.

3 Definitions

This section contains definitions of terms needed for proper understanding and application of this standard which are not believed to be adequately treated elsewhere. A glossary of telephone terminology, which will be published as a companion volume to the series of technical standards on Telephone Terminals For Voiceband Applications, is recommended as a general reference and for definitions not covered in this section.

3.1 A telephone is a terminal instrument which permits two-way, real-time voice communication with a distant party over a network or customer premises connection. It converts real-time voice and voiceband

acoustic signals into electrical signals suitable for transmission over the telephone network and converts received electrical signals into acoustic signals. A telephone which meets the requirements of this standard also generates a magnetic field to which hearing-aids may couple.

3.2 The telephone boundaries are the electrical interface with the network, PBX or KTS and the acoustic, magnetic and mechanical interfaces with the user. The telephone may also have an electrical interface with commercial power.

3.3 A hearing aid is a personal electronic amplifying device, intended to increase the loudness of sound and worn to compensate for impaired hearing. When equipped with an optional inductive pick-up coil (commonly called a telecoil), a hearing aid can be used to amplify magnetic fields such as those from telephone receivers or induction-loop systems.

3.4 The reference plane is the planar area containing points of the receiver-end of the handset which, in normal handset use, rest against the ear (see Fig 1).

3.5 The measurement plane is parallel to, and 10 mm in front of, the reference plane (see Fig 1).

3.6 The reference axis is normal to the reference plane and passes through the center of the receiver cap (or the center of the hole array, for handset types that do not have receiver caps).

3.7 The measurement axis is parallel to the reference axis but may be displaced from that axis, by a maximum of 10 mm (see Fig 1). Within this constraint, the measurement axis may be located where the axial and radial field intensity measurements, are optimum with regard to the requirements. In a handset with a centered receiver and a circularly symmetrical magnetic field, the measurement axis and the reference axis would coincide.

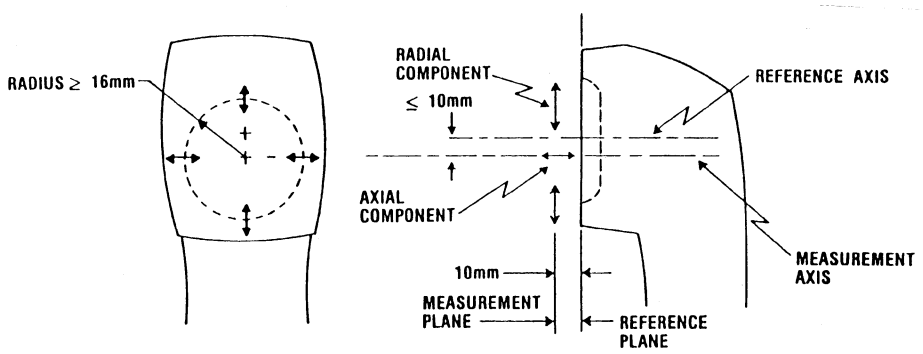

FIG 1 REFERENCE AND MEASUREMENT PLANES AND AXES

4 Technical Requirements

4.1 *General.*

These criteria apply to handsets when tested as a constituent part of a telephone.

4.1.1 Three parameters descriptive of the magnetic field at points in the measurement plane shall be used to ascertain adequacy for magnetic coupling. These three parameters are intensity, direction and frequency response, associated with the field vector.

4.1.2 The procedures for determining the parameter values are defined in the IEEE Standard Method For Measuring The Magnetic Field Intensity Around A Telephone Receiver (Ref: A6), with the exception that this EIA Recommended Standard does not require that the measurements be made using an equivalent loop of 2.75 km of No. 26 AWG cable, but uses a 1250–ohm resistor in series with the battery feed instead (see Fig 2).

4.1.3 When testing other than general purpose analog telephones, e.g., proprietary or digital telephones, an appropriate feed circuit and termination shall be used that produces equivalent test conditions.

4.2 *Axial Field Intensity.*

When measured as specified in 4.1.2, the axial component of the magnetic field directed along the measurement axis and located at the measurement plane, shall be greater than −22 dB relative to 1 A/m, for an input of −10 dBV at 1000 Hz (see Fig 2).

NOTE: If the magnitude of the axial component exceeds −19 dB relative to 1 A/m, some

relaxation in the frequency response is permitted (See 4.4.1).

4.3 *Radial Field Intensity.*

When measured as specified in 4.1.2, radial components of the magnetic field as measured at four points 90° apart, and at a distance ≥16 mm from the measurement axis (as selected in 4.2), shall be greater than −27 dB relative to 1 A/m, for an input of −10 dBV at 1000 Hz (see Fig 2).

4.4 *Induced Voltage Frequency Response.*

The frequency response of the voltage induced in the probe coil by the axial component of the magnetic field as measured in 4.2, shall fall within the acceptable region of Fig 4A or Fig 4B (see 4.4.1 and 4.4.2), over the frequency range 300-to-3300 Hz.

4.4.1 For receivers with an axial component which exceeds −19 dB relative to 1 A/m, when measured as specified in 4.1.2, the frequency response shall fall within the acceptable region of Fig 4A.

4.4.2 For receivers with an axial component which is less than −19 dB but greater than −22 dB relative to 1 A/m, when measured as specified in 4.1.2, the frequency response shall fall within the acceptable region of Fig 4B.

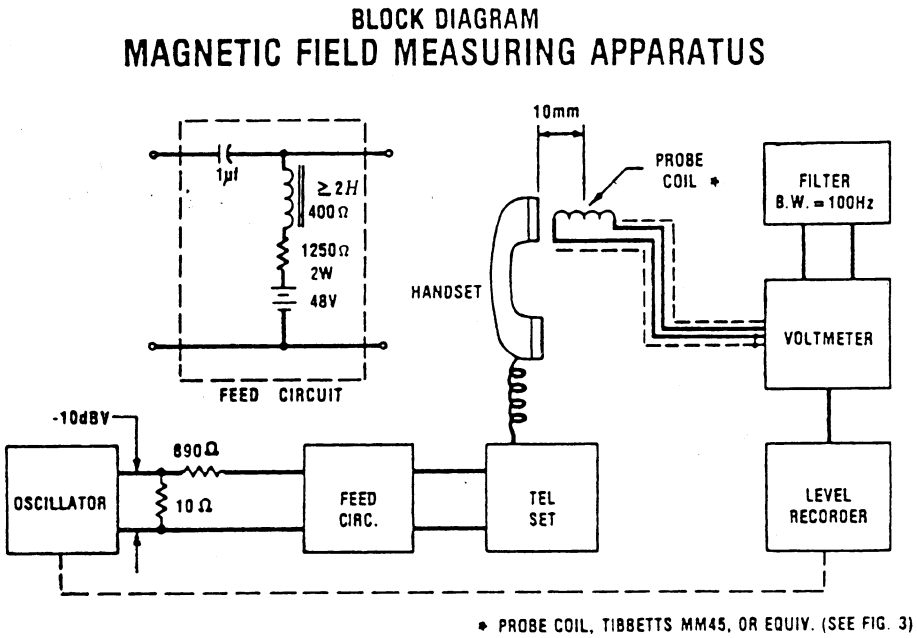

FIG 2 MEASUREMENT BLOCK DIAGRAM

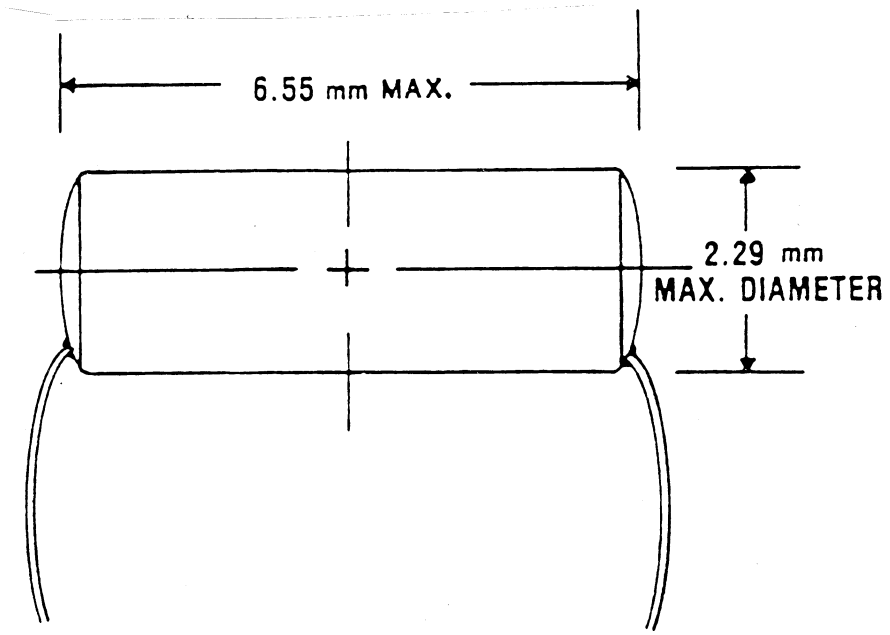

TYPICAL PARAMETERS OF PROBE COIL

DC RESISTANCE: 900 Ω
INDUCTANCE: 140 mH
SENSITIVITY: -60.5 dBV/(A/m)

FIG 3 PROBE COIL PARAMETERS

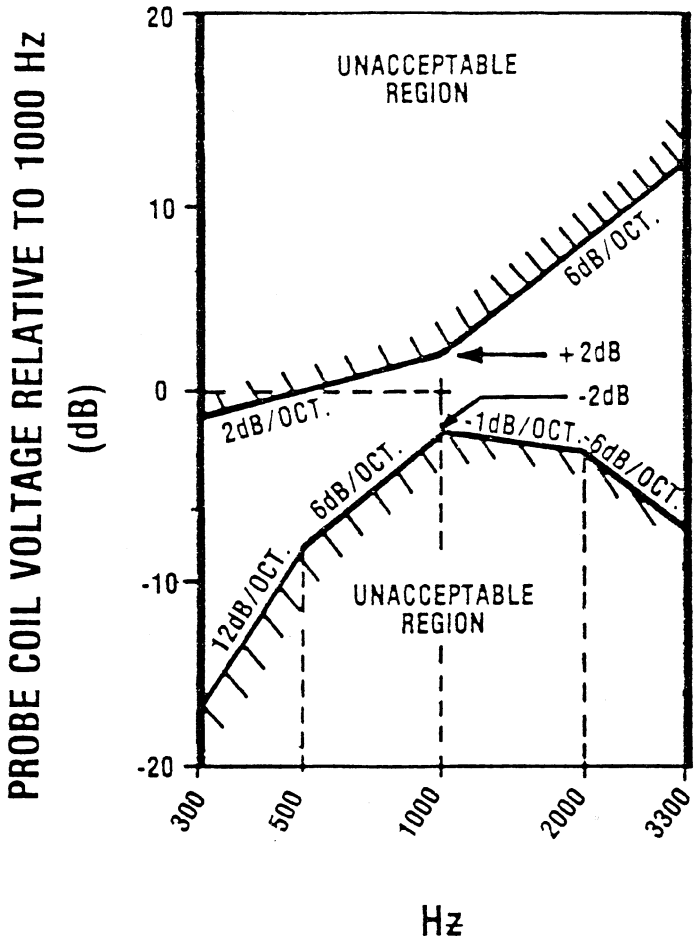

FIG 4A INDUCED VOLTAGE FREQUENCY RESPONSE
FOR RECEIVERS WITH AN AXIAL FIELD THAT EXCEEDS -19 dB

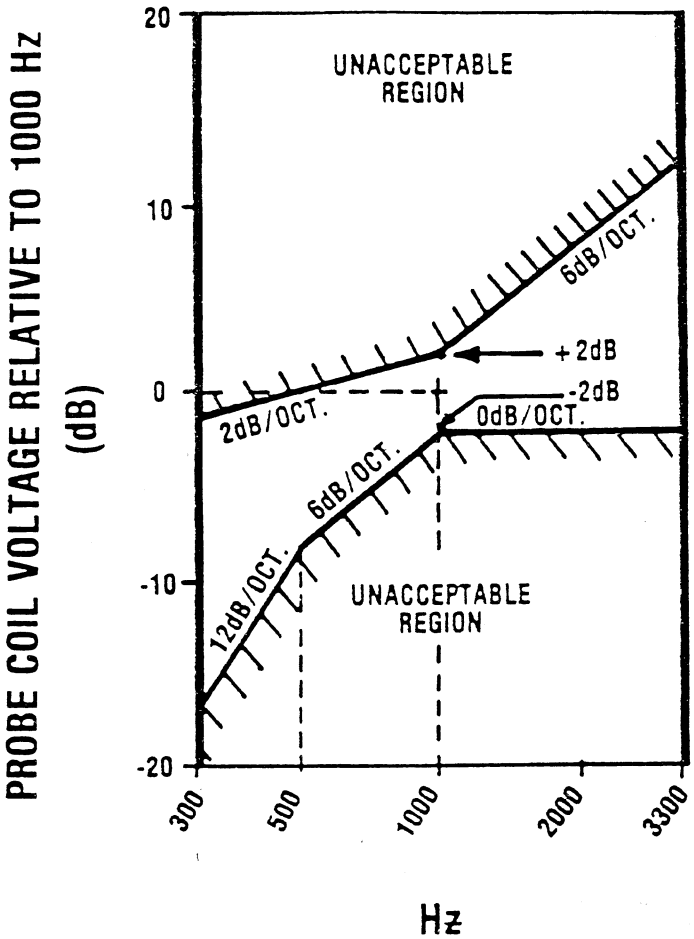

FIG 4B INDUCED VOLTAGE FREQUENCY RESPONSE FOR RECEIVERS WITH AN AXIAL FIELD THAT EXCEEDS -22 dB

Appendix A—Bibliography

(A1) EIA Standard RS–464, Private Branch Exchange (PBX) Switching Equipment for Voiceband Applications.

(A2) EIA Standard RS–478, Multi-Line Key Telephone Systems (KTS) for Voiceband Applications.

(A3) EIA Standard RS–470, Telephone Instruments with Loop Signaling for Voiceband Applications.

(A4) EIA Project Number PN–1361, Environmental and Safety Considerations for Voice Telephone Terminals.

(A5) Federal Communications Commission Rules and Regulations, part 68, Connection of Terminal Equipment to the Telephone Network.

(A6) IEEE Standard, Method for Measuring the Magnetic Field arould a Telephone Receiver. (to be published)

[49 FR 1363, Jan. 11, 1984, as amended at 61 FR 42187, Aug. 14, 1996]

§ 68.317 Hearing aid compatibility volume control: technical standards.

(a) An analog telephone complies with the Commission's volume control requirements if the telephone is equipped with a receive volume control that provides, through the receiver in the handset or headset of the telephone, 12 dB of gain minimum and up to 18 dB of gain maximum, when measured in terms of Receive Objective Loudness Rating (ROLR), as defined in paragraph 4.1.2 of ANSI/EIA–470–A–1987 (Telephone Instruments With Loop Signaling) . The 12 dB of gain minimum must be achieved without significant clipping of the test signal. The telephone also shall comply with the upper and lower limits for ROLR given in table 4.4 of ANSI/EIA–470–A–1987 when the receive volume control is set to its normal unamplified level.

NOTE TO PARAGRAPH (a): Paragraph 4.1.2 of ANSI/EIA–470–A–1987 identifies several characteristics related to the receive response of a telephone. It is only the normal unamplified ROLR level and the change in ROLR as a function of the volume control setting that are relevant to the specification of volume control as required by this section.

(b) The ROLR of an analog telephone shall be determined over the frequency range from 300 to 3300 HZ for short, average, and long loop conditions represented by 0, 2.7, and 4.6 km of 26 AWG nonloaded cable, respectively. The specified length of cable will be simulated by a complex impedance. (See Figure A.) The input level to the cable simulator shall be −10 dB with respect to 1 V open circuit from a 900 ohm source.

(c) A digital telephone complies with the Commission's volume control requirements if the telephone is equipped with a receive volume control that provides, through the receiver of the handset or headset of the telephone, 12 dB of gain minimum and up to 18 dB of gain maximum, when measured in terms of Receive Objective Loudness Rating (ROLR), as defined in paragraph 4.3.2 of ANSI/EIA/TIA–579–1991 (Acoustic-To-Digital and Digital-To-Acoustic Transmission Requirements for ISDN Terminals). The 12 dB of gain minimum must be achieved without significant clipping of the test signal. The telephone also shall comply with the limits on the range for ROLR given in paragraph 4.3.2.2 of ANSI/EIA/TIA–579–1991 when the receive volume control is set to its normal unamplified level.

(d) The ROLR of a digital telephone shall be determined over the frequency range from 300 to 3300 Hz using the method described in paragraph 4.3.2.1 of ANSI/EIA/TIA–579–1991. No variation in loop conditions is required for this measurement since the receive level of a digital telephone is independent of loop length.

(e) The ROLR for either an analog or digital telephone shall first be determined with the receive volume control at its normal unamplified level. The minimum volume control setting shall be used for this measurement unless the manufacturer identifies a different setting for the nominal volume level. The ROLR shall then be determined with the receive volume control at its maximum volume setting. Since ROLR is a loudness rating value expressed in dB of loss, more positive values of ROLR represent lower receive levels. Therefore, the ROLR value determined for the maximum volume control setting should be subtracted from that determined for the nominal volume control setting to determine compliance with the gain requirement.

(f) The 18 dB of receive gain may be exceeded provided that the amplified receive capability automatically resets to nominal gain when the telephone is caused to pass through a proper on-hook transition in order to minimize the likelihood of damage to individuals with normal hearing.

(g) These incorporations by reference of paragraph 4.1.2 (including table 4.4) of American National Standards Institute (ANSI) Standard ANSI/EIA–470–A–1987 and paragraph 4.3.2 of ANSI/EIA/TIA–579–1991 were approved by the Director of the Federal Register in accordance with 5 U.S.C. 552(a) and 1 CFR part 51. Copies of these publications may be purchased from the American National Standards Institute (ANSI), Sales Department, 11 West 42nd Street, 13th Floor, New York, NY 10036, (212) 642–4900. Copies also may be inspected during normal business hours at the following locations: Consumer and Governmental Affairs Bureau, Reference Information Center, Federal Communications Commission, 445 12th Street, SW, Washington, DC 20554; and the National Archives and Records Administration (NARA). For information on the availability of this material at NARA, call 202–741–6030, or go to: *http://www.archives.gov/federal_register/code_of_federal_regulations/ibr_locations.html*.

[61 FR 42187, Aug. 14, 1996, as amended at 64 FR 60726, Nov. 8, 1999; 67 FR 13229, Mar. 21, 2002; 69 FR 18803, Apr. 9, 2004]

§ 68.318 Additional limitations.

(a) *General*. Registered terminal equipment for connection to those services discussed below must incorporate the specified features.

(b) *Registered terminal equipment with automatic dialing capability*. (1) Automatic dialing to any individual number is limited to two successive attempts. Automatic dialing equipment which employ means for detecting both busy and reorder signals shall be permitted an additional 13 attempts if a busy or reorder signal is encountered on each attempt. The dialer shall be unable to re-attempt a call to the same number for at least 60 minutes following either the second or fifteenth successive attempt, whichever applies, unless the dialer is reactivated by either manual or external means. This rule does not apply to manually activated dialers that dial a number once following each activation.

NOTE TO PARAGRAPH (b)(1): Emergency alarm dialers and dialers under external computer control are exempt from these requirements.

(2) If means are employed for detecting both busy and reorder signals, the automatic dialing equipment shall return to its on-hook state within 15 seconds after detection of a busy or reorder signal.

(3) If the called party does not answer, the automatic dialer shall return to the on-hook state within 60 seconds of completion of dialing.

(4) If the called party answers, and the calling equipment does not detect a compatible terminal equipment at the called end, then the automatic dialing equipment shall be limited to one additional call which is answered. The automatic dialing equipment shall comply with paragraphs (b)(1), (b)(2), and (b)(3) of this section for additional call attempts that are not answered.

(5) Sequential dialers shall dial only once to any individual number before proceeding to dial another number.

(6) Network addressing signals shall be transmitted no earlier than:

(i) 70 ms after receipt of dial tone at the network demarcation point; or

(ii) 600 ms after automatically going off-hook (for single line equipment that does not use dial tone detectors); or

(iii) 70 ms after receipt of CO ground start at the network demarcation point.

(c) *Line seizure by automatic telephone dialing systems*. Automatic telephone dialing systems which deliver a recorded message to the called party must release the called party's telephone line within 5 seconds of the time notification is transmitted to the system that the called party has hung up, to allow the called party's line to be used to make or receive other calls.

(d) *Telephone facsimile machines; Identification of the sender of the message*. It shall be unlawful for any person within the United States to use a computer or other electronic device to send any message via a telephone facsimile machine unless such person clearly marks, in a margin at the top or bottom of each transmitted page of the message or on the first page of the transmission, the date and time it is sent and an identification of the business, other entity, or individual sending the message and the telephone number of the sending machine or of

such business, other entity, or individual. If a facsimile broadcaster demonstrates a high degree of involvement in the sender's facsimile messages, such as supplying the numbers to which a message is sent, that broadcaster's name, under which it is registered to conduct business with the State Corporation Commission (or comparable regulatory authority), must be identified on the facsimile, along with the sender's name. Telephone facsimile machines manufactured on and after December 20, 1992, must clearly mark such identifying information on each transmitted page.

(e) *Requirement that registered equipment allow access to common carriers.* Any equipment or software manufactured or imported on or after April 17, 1992, and installed by any aggregator shall be technologically capable of providing consumers with access to interstate providers of operator services through the use of equal access codes. The terms used in this paragraph shall have meanings defined in § 64.708 of this chapter (47 CFR 64.708).

[62 FR 61691, Nov. 19, 1997, as amended at 68 FR 44179, July 25, 2003]

§ 68.320 Supplier's Declaration of Conformity.

(a) Supplier's Declaration of Conformity is a procedure where the responsible party, as defined in § 68.3, makes measurements or takes other necessary steps to ensure that the terminal equipment complies with the appropriate technical standards.

(b) The Supplier's Declaration of Conformity attaches to all items subsequently marketed by the responsible party which are identical, within the variation that can be expected to arise as a result of quantity production techniques, to the sample tested and found acceptable by the responsible party.

(c) The Supplier's Declaration of Conformity signifies that the responsible party has determined that the equipment has been shown to comply with the applicable technical criteria if no unauthorized change is made in the equipment and if the equipment is properly maintained and operated.

(d) The responsible party, if different from the manufacturer, may upon receiving a written statement from the manufacturer that the equipment complies with the appropriate technical criteria, rely on the manufacturer or independent testing agency to determine compliance. Any records that the Administrative Council for Terminal Attachments requires the responsible party to maintain shall be in the English language and shall be made available to the Commission upon a request.

(e) No person shall use or make reference to a Supplier's Declaration of Conformity in a deceptive or misleading manner or to convey the impression that such a Supplier's Declaration of Conformity reflects more than a determination by the responsible party that the device or product has been shown to be capable of complying with the applicable technical criteria published by the Administrative Council of Terminal Attachments.

[66 FR 7585, Jan. 24, 2001]

§ 68.321 Location of responsible party.

The responsible party for a Supplier's Declaration of Conformity must designate an agent for service of process that is physically located within the United States.

[67 FR 57182, Sept. 9, 2002]

§ 68.322 Changes in name, address, ownership or control of responsible party.

(a) The responsible party for a Supplier's Declaration of Conformity may license or otherwise authorize a second party to manufacture the equipment covered by the Supplier's Declaration of Conformity provided that the responsible party shall continue to be responsible to the Commission for ensuring that the equipment produced pursuant to such an agreement remains compliant with the appropriate standards.

(b) In the case of transactions affecting the responsible party of a Supplier's Declaration of Conformity, such as a transfer of control or sale to another company, mergers, or transfer of manufacturing rights, the successor entity shall become the responsible party.

[66 FR 7586, Jan. 24, 2001]

§ 68.324 Supplier's Declaration of Conformity requirements.

(a) Each responsible party shall include in the Supplier's Declaration of Conformity, the following information:

(1) The identification and a description of the responsible party for the Supplier's Declaration of Conformity and the product, including the model number of the product,

(2) A statement that the terminal equipment conforms with applicable technical requirements, and a reference to the technical requirements,

(3) The date and place of issue of the declaration,

(4) The signature, name and function of person making declaration,

(5) A statement that the handset, if any, complies with § 68.316 of these rules (defining hearing aid compatibility), or that it does not comply with that section. A telephone handset which complies with § 68.316 shall be deemed a ''hearing aid-compatible telephone'' for purposes of § 68.4.

(6) Any other information required to be included in the Supplier's Declaration of Conformity by the Administrative Council of Terminal Attachments.

(b) If the device that is subject to a Supplier's Declaration of Conformity is designed to operate in conjunction with other equipment, the characteristics of which can affect compliance of such device with part 68 rules and/or with technical criteria published by the Administrative Council for Terminal Attachments, then the Model Number(s) of such other equipment must be supplied, and such other equipment must also include a Supplier's Declaration of Conformity or a certification from a Telecommunications Certification Body.

(c) The Supplier's Declaration of Conformity shall be included in the user's manual or as a separate document enclosed with the terminal equipment.

(d) If terminal equipment is not subject to a Supplier's Declaration of Conformity, but instead contains protective circuitry that is subject to a Supplier's Declaration of Conformity, then the responsible party for the protective circuitry shall include with each module of such circuitry, a Supplier's Declaration of Conformity containing the information required under § 68.340(a), and the responsible party of such terminal equipment shall include such statement with each unit of the product.

(e) (1) The responsible party for the terminal equipment subject to a Supplier's Declaration of Conformity also shall provide to the purchaser of such terminal equipment, instructions as required by the Administrative Council for Terminal Attachments.

(2) A copy of the Supplier's Declaration of Conformity shall be provided to the Administrative Council for Terminal Attachments along with any other information the Administrative Council for Terminal Attachments requires; this information shall be made available to the public.

(3) The responsible party shall make a copy of the Supplier's Declaration of Conformity freely available to the general public on its company website. The information shall be accessible to the disabled community from the website. If the responsible party does not have a functional and reliable website, then the responsible party shall inform the Administrative Council for Terminal Attachments of such circumstances, and the Administrative Council for Terminal Attachments shall make a copy available on its website.

(f) For a telephone that is not hearing aid-compatible, as defined in § 68.316 of this part, the responsible party also shall provide the following in the Supplier's Declaration of Conformity:

(1) Notice that FCC rules prohibit the use of that handset in certain locations; and

(2) A list of such locations (see § 68.112).

[66 FR 7586, Jan. 24, 2001]

§ 68.326 Retention of records.

(a) The responsible party for a Supplier's Declaration of Conformity shall maintain records containing the following information:

(1) A copy of the Supplier's Declaration of Conformity;

(2) The identity of the testing facility, including the name, address, phone number and other contact information.

(3) A detailed explanation of the testing procedure utilized to determine whether terminal equipment conforms to the appropriate technical criteria.

(4) A copy of the test results for terminal equipment compliance with the appropriate technical criteria.

(b) For each device subject to the Supplier's Declaration of Conformity requirement, the responsible party shall maintain all records required under § 68.326(a) for at least ten years after the manufacture of said equipment has been permanently discontinued, or until the conclusion of an investigation or a proceeding, if the responsible party is officially notified prior to the expiration of such ten year period that an investigation or any other administrative proceeding involving its equipment has been instituted, whichever is later.

[66 FR 7586, Jan. 24, 2001]

§ 68.346 Description of testing facilities.

(a) Each responsible party for equipment that is subject to a Supplier's Declaration of Conformity under this part, shall compile a description of the measurement facilities employed for testing the equipment. The responsible party for the Supplier's Declaration of Conformity shall retain a description of the measurement facilities.

(b) The description shall contain the information required to be included by the Administrative Council for Terminal Attachments.

[66 FR 7586, Jan. 24, 2001]

§ 68.348 Changes in equipment and circuitry subject to a Supplier's Declaration of Conformity.

(a) No change shall be made in terminal equipment or protective circuitry that would result in any material change in the information contained in the Supplier's Declaration of Conformity Statement furnished to users.

(b) Any other changes in terminal equipment or protective circuitry which is subject to an effective Supplier's Declaration of Conformity shall be made only by the responsible party or an authorized agent thereof, and the responsible party will remain responsible for the performance of such changes.

[66 FR 7586, Jan. 24, 2001]

§ 68.350 Revocation of Supplier's Declaration of Conformity.

(a) The Commission may revoke any Supplier's Declaration of Conformity for cause in accordance with the provisions of this section or in the event changes in technical standards published by the Administrative Council for Terminal Attachments require the revocation of any outstanding Supplier's Declaration of Conformity in order to achieve the objectives of part 68.

(b) Cause for revocation. In addition to the provisions in § 68.211, the Commission may revoke a Supplier's Declaration of Conformity:

(1) For false statements or representations made in materials or responses submitted to the Commission and/or the Administrative Council for Terminal Attachments, or in records required to be kept by § 68.324 and the Administrative Council for Terminal Attachments.

(2) If upon subsequent inspection or operation it is determined that the equipment does not conform to the pertinent technical requirements.

(3) If it is determined that changes have been made in the equipment other that those authorized by this part or otherwise expressly authorized by the Commission.

[66 FR 7587, Jan. 24, 2001]

§ 68.354 Numbering and labeling requirements for terminal equipment.

(a) Terminal equipment and protective circuitry that is subject to a Supplier's Declaration of Conformity or that is certified by a Telecommunications Certification Body shall have labels in a place and manner required by the Administrative Council for Terminal Attachments.

(b) Terminal equipment labels shall include an identification numbering system in a manner required by the Administrative Council for Terminal Attachments.

(c) If the Administrative Council for Terminal Attachments chooses to continue the practice of utilizing a designated ''FCC'' number, it shall include in its labeling requirements a warning that the Commission no longer directly approves or registers terminal equipment.

(d) Labeling developed for terminal equipment by the Administrative Council on Terminal Attachments shall contain sufficient information for providers of wireline telecommunications, the Federal Communications Commission, and the U.S. Customs Service to carry out their functions, and for consumers to easily identify the responsible party of their terminal equipment. The numbering and labeling scheme shall be nondiscriminatory, creating no competitive advantage for any entity or segment of the industry.

(e) FCC numbering and labeling requirements existing prior to the effective date of these rules shall remain unchanged until the Administrative Council for Terminal Attachments publishes its numbering and labeling requirements.

[66 FR 7587, Jan. 24, 2001, as amended at 67 FR 57182, Sept. 9, 2002]

Subpart E—Complaint Procedures

§§ 68.400–68.412 [Reserved]

§ 68.414 Hearing aid-compatibility: Enforcement.

Enforcement of §§ 68.4 and 68.112 is hereby delegated to those states which adopt those sections and provide for their enforcement. The procedures followed by a state to enforce those sections shall provide a 30-day period after a complaint is filed, during which time state personnel shall attempt to resolve a dispute on an informal basis. If a state has not adopted or incorporated §§ 68.4 and 68.112, or failed to act within 6 months from the filing of a complaint with the state public utility commission, the Commission will accept such complaints. A written notification to the complainant that the state believes action is unwarranted is not a failure to act.

[49 FR 1368, Jan. 11, 1984]

§ 68.415 Hearing aid-compatibility and volume control informal complaints.

Persons with complaints under §§ 68.4 and 68.112 that are not addressed by the states pursuant to § 68.414, and all other complaints regarding rules in this part pertaining to hearing aid compatibility and volume control, may bring informal complaints as described in § 68.416 through § 68.420. All responsible parties of terminal equipment are subject to the informal complaint provisions specified in this section.

[66 FR 7587, Jan. 24, 2001]

§ 68.417 Informal complaints; form and content.

(a) An informal complaint alleging a violation of hearing aid compatibility and/or volume control rules in this subpart may be transmitted to the Consumer Information Bureau by any reasonable means, e.g., letter, facsimile transmission, telephone (voice/TRS/TTY), Internet e-mail, ASCII text, audio-cassette recording, and Braille.

(b) An informal complaint shall include:

(1) The name and address of the complainant;

(2) The name and address of the responsible party, if known, or the manufacturer or provider against whom the complaint is made;

(3) A full description of the terminal equipment about which the complaint is made;

(4) The date or dates on which the complainant purchased, acquired or used the terminal equipment about which the complaint is being made;

(5) A complete statement of the facts, including documentation where available, supporting the complainant's allegation that the defendant has failed to comply with the requirements of this subpart;

(6) The specific relief or satisfaction sought by the complainant, and

(7) The complainant's preferred format or method of response to the complaint by the Commission and defendant (e.g., letter, facsimile transmission, telephone (voice/TRS/TTY), Internet e-mail, ASCII text, audio-cassette recording, Braille; or some other

method that will best accommodate the complainant's disability).

[66 FR 7587, Jan. 24, 2001]

§ 68.418 Procedure; designation of agents for service.

(a) The Commission shall promptly forward any informal complaint meeting the requirements of § 68.17 to each responsible party named in or determined by the staff to be implicated by the complaint. Such responsible party or parties shall be called on to satisfy or answer the complaint within the time specified by the Commission.

(b) To ensure prompt and effective service of informal complaints filed under this subpart, every responsible party of equipment approved pursuant to this part shall designate and identify one or more agents upon whom service may be made of all notices, inquiries, orders, decisions, and other pronouncements of the Commission in any matter before the Commission. Such designation shall be provided to the Commission and shall include a name or department designation, business address, telephone number, and, if available, TTY number, facsimile number, and Internet e-mail address. The Commission shall make this information available to the public.

[66 FR 7587, Jan. 24, 2001, as amended at 73 FR 25591, May 7, 2008]

§ 68.419 Answers to informal complaints.

Any responsible party to whom the Commission or the Consumer Information Bureau under this subpart directs an informal complaint shall file an answer within the time specified by the Commission or the Consumer Information Bureau. The answer shall:

(a) Be prepared or formatted in the manner requested by the complainant pursuant to § 68.417, unless otherwise permitted by the Commission or the Consumer Information Bureau for good cause shown;

(b) Describe any actions that the defendant has taken or proposes to take to satisfy the complaint;

(c) Advise the complainant and the Commission or the Consumer Information Bureau of the nature of the defense(s) claimed by the defendant;

(d) Respond specifically to all material allegations of the complaint; and

(e) Provide any other information or materials specified by the Commission or the Consumer Information Bureau as relevant to its consideration of the complaint.

[66 FR 7587, Jan. 24, 2001]

§ 68.420 Review and disposition of informal complaints.

(a) Where it appears from the defendant's answer, or from other communications with the parties, that an informal complaint has been satisfied, the Commission or the Consumer Information Bureau on delegated authority may, in its discretion, consider the informal complaint closed, without response to the complainant or defendant. In all other cases, the Commission or the Consumer Information Bureau shall inform the parties of its review and disposition of a complaint filed under this subpart. Where practicable, this information (the nature of which is specified in paragraphs (b) through (d) of this section, shall be transmitted to the complainant and defendant in the manner requested by the complainant, (e.g., letter, facsimile transmission, telephone (voice/TRS/TTY), Internet e-mail, ASCII text, audio-cassette recording, or Braille).

(b) In the event the Commission or the Consumer and Governmental Affairs Bureau determines, based on a review of the information provided in the informal complaint and the defendant's answer thereto, that no further action is required by the Commission or the Consumer and Governmental Affairs Bureau with respect to the allegations contained in the informal complaint, the informal complaint shall be closed and the complainant and defendant shall be duly informed of the reasons therefor. A complainant, unsatisfied with the defendant's response to the informal complaint and the staff decision to terminate action on the informal complaint, may file a complaint with the Commission or the Enforcement Bureau as specified in §§ 68.400 through 68.412.

(c) In the event the Commission or the Consumer Information Bureau on delegated authority determines, based

on a review of the information presented in the informal complaint and the defendant's answer thereto, that a material and substantial question remains as to the defendant's compliance with the requirements of this subpart, the Commission or the Consumer Information Bureau may conduct such further investigation or such further proceedings as may be necessary to determine the defendant's compliance with the requirements of this subpart and to determine what, if any, remedial actions and/or sanctions are warranted.

(d) In the event that the Commission or the Consumer Information Bureau on delegated authority determines, based on a review of the information presented in the informal complaint and the defendant's answer thereto, that the defendant has failed to comply with or is presently not in compliance with the requirements of this subpart, the Commission or the Consumer Information Bureau on delegated authority may order or prescribe such remedial actions and/or sanctions as are authorized under the Act and the Commission's rules and which are deemed by the Commission or the Consumer Information Bureau on delegated authority to be appropriate under the facts and circumstances of the case.

[66 FR 7588, Jan. 24, 2001, as amended at 67 FR 13229, Mar. 21, 2002]

§ 68.423 Actions by the Commission on its own motion.

The Commission may on its own motion conduct such inquiries and hold such proceedings as it may deem necessary to enforce the requirements of this subpart. The procedures to be followed by the Commission shall, unless specifically prescribed in the Act and the Commission's rules, be such as in the opinion of the Commission will best serve the purposes of such inquiries and proceedings.

[66 FR 7588, Jan. 24, 2001]

Subpart F [Reserved]

Subpart G—Administrative Council for Terminal Attachments

SOURCE: 66 FR 7588, Jan. 24, 2001, unless otherwise noted.

§ 68.602 Sponsor of the Administrative Council for Terminal Attachments.

(a) The Telecommunications Industry Association (TIA) and the Alliance for Telecommunications Industry Solutions (ATIS) jointly shall establish the Administrative Council for Terminal Attachment and shall sponsor the Administrative Council for Terminal Attachments for four years from the effective date of these rules. The division of duties by which this responsibility is executed may be a matter of agreement between these two parties; however, both are jointly and severally responsible for observing these rule provisions. After four years from the effective date of these rules, and thereafter on a quadrennial basis, the Administrative Council for Terminal Attachments may vote by simple majority to be sponsored by any ANSI-accredited organization.

(b) The sponsoring organizations shall ensure that the Administrative Council for Terminal Attachments is populated in a manner consistent with the criteria of American National Standards Institute's Organization Method or the Standards Committee Method (and their successor Method or Methods as ANSI may from time to time establish) for a balanced and open membership.

(c) After the Administrative Council for Terminal Attachments is populated, the sponsors are responsible for fulfilling secretariat positions as determined by the Administrative Council for Terminal Attachments. The Administrative Council shall post on a publicly available web site and make available to the public in hard copy form the written agreement into which it enters with the sponsor or sponsors.

[66 FR 7588, Jan. 24, 2001, as amended at 67 FR 57182, Sept. 9, 2002]

§ 68.604 Requirements for submitting technical criteria.

(a) Any standards development organization that is accredited under the American National Standards Institute's Organization Method or the Standards Committee Method (and their successor Method or Methods as ANSI may from time to time establish) may establish technical criteria for terminal equipment pursuant to ANSI

consensus decision-making procedures, and it may submit such criteria to the Administrative Council for Terminal Attachments.

(b) Any ANSI-accredited standards development organization that develops standards for submission to the Administrative Council for Terminal Attachments must implement and use procedures for the development of those standards that ensure openness equivalent to the Commission rulemaking process.

(c) Any standards development organization that submits standards to the Administrative Council for Terminal Attachments for publication as technical criteria shall certify to the Administrative Council for Terminal Attachments that:

(1) The submitting standards development organization is ANSI-accredited to the Standards Committee Method or the Organization Method (or their successor Methods as amended from time to time by ANSI);

(2) The technical criteria that it proposes for publication do not conflict with any published technical criteria or with any technical criteria submitted and pending for publication, and

(3) The technical criteria that it proposes for publication are limited to preventing harms to the public switched telephone network, identified in § 68.3 of this part.

§ 68.608 Publication of technical criteria.

The Administrative Council for Terminal Attachments shall place technical criteria proposed for publication on public notice for 30 days. At the end of the 30 day public notice period, if there are no oppositions, the Administrative Council for Terminal Attachments shall publish the technical criteria.

§ 68.610 Database of terminal equipment.

(a) The Administrative Council for Terminal Attachments shall operate and maintain a database of all approved terminal equipment. The database shall meet the requirements of the Federal Communications Commission and the U.S. Customs Service for enforcement purposes. The database shall be accessible by government agencies free of charge. Information in the database shall be readily available and accessible to the public, including individuals with disabilities, at nominal or no costs.

(b) Responsible parties, whether they obtain their approval from a Telecommunications Certification Body or utilize the Supplier's Declaration of Conformity process, shall submit to the database administrator all information required by the Administrative Council for Terminal Attachments.

(c) The Administrative Council for Terminal Attachments shall ensure that the database is created and maintained in an equitable and nondiscriminatory manner. The manner in which the database is created and maintained shall not permit any entity or segment of the industry to gain a competitive advantage.

(d) The Administrative Council for Terminal Attachments shall file with the Commission, within 180 days of publication of these rules in the FEDERAL REGISTER, a detailed report of the structure of the database, including details of how the Administrative Council for Terminal Attachments will administer the database, the pertinent information to be included in the database, procedures for including compliance information in the database, and details regarding how the government and the public will access the information.

§ 68.612 Labels on terminal equipment.

Terminal equipment certified by a Telecommunications Certification Body or approved by the Supplier's Declaration of Conformity under this part shall be labeled. The Administrative Council for Terminal Attachments shall establish appropriate labeling of terminal equipment. Labeling shall meet the requirements of the Federal Communications Commission and the U.S. Customs Service for their respective enforcement purposes, and of consumers for purposes of identifying the responsible party and model number.

[67 FR 57182, Sept. 9, 2002]

§ 68.614 Oppositions and appeals.

(a) Oppositions filed in response to the Administrative Council for Terminal Attachments' public notice of technical criteria proposed for publication must be received by the Administrative Council for Terminal Attachments within 30 days of public notice to be considered. Oppositions to proposed technical criteria shall be addressed through the appeals procedures of the authoring standards development organization and of the American National Standards Institute. If these procedures have been exhausted, the aggrieved party shall file its opposition with the Commission for *de novo* review.

(b) As an alternative, oppositions to proposed technical criteria may be filed directly with the Commission for *de novo* review within the 30 day public notice period.

PART 69—ACCESS CHARGES

Subpart A—General

Sec.
69.1 Application of access charges.
69.2 Definitions.
69.3 Filing of access service tariffs.
69.4 Charges to be filed.
69.5 Persons to be assessed.

Subpart B—Computation of Charges

69.101 General.
69.104 End user common line for non-price cap incumbent local exchange carriers.
69.105 Carrier common line for non-price cap local exchange carriers.
69.106 Local switching.
69.108 Transport rate benchmark.
69.109 Information.
69.110 Entrance facilities.
69.111 Tandem-switched transport and tandem charge.
69.112 Direct-trunked transport.
69.113 Non-premium charges for MTS-WATS equivalent services.
69.114 Special access.
69.115 Special access surcharges.
69.118 Traffic sensitive switched services.
69.119 Basic service element expedited approval process.
69.120 Line information database.
69.121 Connection charges for expanded interconnection.
69.123 Density pricing zones for special access and switched transport.
69.124 Interconnection charge.
69.125 Dedicated signalling transport.
69.128 Billing name and address.
69.129 Signalling for tandem switching.
69.130 Line port costs in excess of basic analog service.
69.131 Universal service end user charges.

Subpart C—Computation of Charges for Price Cap Local Exchange Carriers

69.151 Applicability.
69.152 End user common line for price cap local exchange carriers.
69.153 Presubscribed interexchange carrier charge (PICC).
69.154 Per-minute carrier common line charge.
69.155 Per-minute residual interconnection charge.
69.156 Marketing expenses.
69.157 Line port costs in excess of basic, analog service.
69.158 Universal service and user charges.

Subpart D—Apportionment of Net Investment

69.301 General.
69.302 Net investment.
69.303 Information origination/termination equipment (IOT).
69.304 Subscriber line cable and wire facilities.
69.305 Carrier cable and wire facilities (C&WF).
69.306 Central office equipment (COE).
69.307 General support facilities.
69.308 [Reserved]
69.309 Other investment.
69.310 Capital leases.

Subpart E—Apportionment of Expenses

69.401 Direct expenses.
69.402 Operating taxes (Account 7200).
69.403 Marketing expenses (Account 6610).
69.404 Telephone operator services expenses in Account 6620.
69.405 Published directory expenses in Account 6620.
69.406 Local business office expenses in Account 6620.
69.407 Revenue accounting expenses in Account 6620.
69.408 All other customer services expenses in Account 6620.
69.409 Corporate operations expenses (included in Account 6720).
69.411 Other expenses.
69.412 Non participating company payments/receipts.
69.413 High cost loop support universal service fund expenses.
69.414 Lifeline assistance expenses.
69.415 Reallocation of certain transport expenses.

Subpart F—Segregation of Common Line Element Revenue Requirement

69.501 General.
69.502 Base factor allocation.

Subpart G—Exchange Carrier Association

69.601 Exchange carrier association.
69.602 Board of directors.
69.603 Association functions.
69.604 Billing and collection of access charges.
69.605 Reporting and distribution of pool access revenues.
69.606 Computation of average schedule company payments.
69.607 Disbursement of Carrier Common Line residue.
69.608 Carrier Common Line hypothetical net balance.
69.609 End User Common Line hypothetical net balances.
69.610 Other hypothetical net balances.

Subpart H—Pricing Flexibility

69.701 Application of rules in this subpart.
69.703 Definitions.
69.705 Procedure.
69.707 Geographic scope of petition.
69.709 Dedicated transport and special access services other than channel terminations between LEC end offices and customer premises.
69.711 Channel terminations between LEC end offices and customer premises.
69.713 Common line, traffic-sensitive, and tandem-switched transport services.
69.714–69.724 [Reserved]
69.725 Attribution of revenues to particular wire centers.
69.727 Regulatory relief.
69.729 New services.
69.731 Low-end adjustment mechanism.

AUTHORITY: 47 U.S.C. 154, 201, 202, 203, 205, 218, 220, 254, 403.

SOURCE: 48 FR 10358, Mar. 11, 1983, unless otherwise noted.

Subpart A—General

§ 69.1 Application of access charges.

(a) This part establishes rules for access charges for interstate or foreign access services provided by telephone companies on or after January 1, 1984.

(b) Except as provided in § 69.1(c), charges for such access service shall be computed, assessed, and collected and revenues from such charges shall be distributed as provided in this part. Access service tariffs shall be filed and supported as provided under part 61 of this chapter, except as modified herein.

(c) The following provisions of this part shall apply to telephone companies subject to price cap regulation only to the extent that application of such provisions is necessary to develop the nationwide average carrier common line charge, for purposes of reporting pursuant to §§ 43.21 and 43.22 of this chapter, and for computing initial charges for new rate elements: §§ 69.3(f), 69.106(b), 69.106(f), 69.106(g), 69.109(b), 69.110(d), 69.111(c), 69.111(g)(1), 69.111(g)(2), 69.111(g)(3), 69.111(l), 69.112(d), 69.114(b), 69.114(d), 69.125(b)(2), 69.301 through 69.310, and 69.401 through 69.412. The computation of rates pursuant to these provisions by telephone companies subject to price cap regulation shall be governed by the price cap rules set forth in part 61 of this chapter and other applicable Commission rules and orders.

(d) To the extent any provision contained in 47 CFR part 51 subparts H and J conflict with any provision of this part, the 47 CFR part 51 provision supersedes the provision of this part.

[48 FR 10358, Mar. 11, 1983, as amended at 55 FR 42385, Oct. 19, 1990; 58 FR 41189, Aug. 3, 1993; 62 FR 40463, July 29, 1997; 76 FR 73882, Nov. 29, 2011]

§ 69.2 Definitions.

For purposes of the part:

(a) *Access minutes* or *Access minutes of use* is that usage of exchange facilities in interstate or foreign service for the purpose of calculating chargeable usage. On the originating end of an interstate or foreign call, usage is to be measured from the time the originating end user's call is delivered by the telephone company and acknowledged as received by the interexchange carrier's facilities connected with the originating exchange. On the terminating end of an interstate or foreign call, usage is to be measured from the time the call is received by the end user in the terminating exchange. Timing of usage at both the originating and terminating end of an interstate or foreign call shall terminate when the calling or called party disconnects, whichever event is recognized first in the originating and terminating end exchanges, as applicable.

(b) *Access service* includes services and facilities provided for the origination or termination of any interstate or foreign telecommunication.

(c) *Annual revenue requirement* means the sum of the return component and the expense component.

(d) *Association* means the telephone company association described in subpart G of this part.

(e) *Big Three Expenses* are the combined expense groups comprising: Plant Specific Operations Expense, Accounts 6110, 6120, 6210, 6220, 6230, 6310 and 6410; Plant Nonspecific Operations Expenses, Accounts 6510, 6530 and 6540, and Customer Operations Expenses, Accounts 6610 and 6620.

(f) *Big Three Expense Factors* are the ratios of the sum of Big Three Expenses apportioned to each element or category to the combined Big Three Expenses.

(g) *Cable and wire facilities* includes all equipment or facilities that are described as cable and wire facilities in the *Separations Manual* and included in Account 2410.

(h) *Carrier cable and wire facilities* means all cable and wire facilities that are not subscriber line cable and wire facilities.

(i) *Central Office Equipment* or *COE* includes all equipment or facilities that are described as Central Office Equipment in the *Separations Manual* and included in Accounts 2210, 2220 and 2230.

(j) *Corporate operations expenses* are included in General and Administrative Expenses (Account 6720).

(k) *Customer operations expenses* include Marketing and Services expenses in Accounts 6610 and 6620, respectively.

(l) *Direct expense* means expenses that are attributable to a particular category or categories of tangible investment described in subpart D of this part and includes:

(1) Plant Specific Operations expenses in Accounts 6110, 6120, 6210, 6220, 6230, 6310 and 6410; and

(2) Plant Nonspecific Operations Expenses in Accounts 6510, 6530, 6540 and 6560.

(m) *End user* means any customer of an interstate or foreign telecommunications service that is not a carrier except that a carrier other than a telephone company shall be deemed to be an ''end user'' when such carrier uses a telecommunications service for administrative purposes and a person or entity that offers telecommunications services exclusively as a reseller shall be deemed to be an ''end user'' if all resale transmissions offered by such reseller originate on the premises of such reseller.

(n) *Entry switch* means the telephone company switch in which a transport line or trunk terminates.

(o) *Expense component* means the total expenses and income charges for an annual period that are attributable to a particular element or category.

(p) *Expenses* include allowable expenses in the Uniform System of Accounts, part 32, apportioned to interstate or international services pursuant to the *Separations Manual* and allowable income charges apportioned to interstate and international services pursuant to the *Separations Manual*.

(q) *General support facilities* include buildings, land, vehicles, aircraft, work equipment, furniture, office equipment and general purpose computers as described in the *Separations Manual* and included in Account 2110.

(r) *Information origination/termination equipment* includes all equipment or facilities that are described as information origination/termination equipment in the *Separations Manual* and in Account 2310 except information origination/termination equipment that is used by telephone companies in their own operations.

(s) *Interexchange* or the *interexchange category* includes services or facilities provided as an integral part of interstate or foreign telecommunications that is not described as ''access service'' for purposes of this part.

(t) *Level I Contributors*. Telephone companies that are not association Common Line tariff participants, file their own Common Line tariffs effective April 1, 1989, and had a lower than average Common Line revenue requirement per minute of use in 1988 and thus were net contributors (*i.e.*, had a negative net balance) to the association Common Line pool in 1988.

(u) *Level I Receivers*. Telephone companies that are not association Common Line tariff participants, file their own Common Line tariffs effective

April 1, 1989, and had a higher than average Common Line revenue requirement per minute of use in 1988 and thus were net receivers (*i.e.*, had a positive net balance) from the association Common Line Pool in 1988.

(v) *Level II Contributors*. A telephone company or group of affiliated telephone companies with fewer than 300,000 access lines and less than $150 million in annual operating revenues that is not an association Common Line tariff participant, that files its own Common Line tariff effective July 1, 1990, and that had a lower than average Common Line revenue requirement per minute of use in 1988 and thus was a net contributor (i.e., had a negative net balance) to the association Common Line pool in 1988.

(w) *Level II Receivers*. A telephone company or group of affiliated telephone companies with fewer than 300,000 access lines and less than $150 million in annual operating revenues that is not an association Common Line tariff participant, that files its own Common Line tariff effective July 1, 1990, and that had a higher than average Common Line revenue requirement per minute of use in 1988 and thus was a net receiver (i.e., had a positive net balance) from the association Common Line pool in 1988.

(x) *Line* or *Trunk* includes, but is not limited to, transmission media such as radio, satellite, wire, cable and fiber optic cable means of transmission.

(y) [Reserved]

(z) *Net investment* means allowable original cost investment in Accounts 2001 through 2003, 1220 and the investments in nonaffiliated companies included in Account 1410, that has been apportioned to interstate and foreign services pursuant to the Separations Manual from which depreciation, amortization and other reserves attributable to such investment that has been apportioned to interstate and foreign services pursuant to the Separations Manual have been subtracted and to which working capital that is attributable to interstate and foreign services has been added.

(aa) *Operating taxes* include all taxes in Account 7200;

(bb) *Origination* of a service that is switched in a Class 4 switch or an interexchange switch that performs an equivalent function ends when the transmission enters such switch and *termination* of such a service begins when the transmission leaves such a switch, except that;

(1) Switching in a Class 4 switch or transmission between Class 4 switches that is not deemed to be interexchange for purposes of the Modified Final Judgement entered August 24, 1982, in *United States v Western Electric Co.*, D.C. Civil Action No. 82–0192, will be ''origination'' or ''termination'' for purposes of this part; and

(2) *Origination* and *Termination* does not include the use of any part of a line, trunk or switch that is not owned or leased by a telephone company.

(cc) *Origination* of any service other than a service that is switched in a Class 4 switch or a switch that performs an equivalent function ends and ''termination'' of any such service begins at a point of demarcation that corresponds with the point of demarcation that is used for a service that is switched in a Class 4 switch or a switch that performs an equivalent function.

(dd) *Private line* means a line that is used exclusively for an interexchange service other than MTS, WATS or an MTS-WATS equivalent service, including a line that is used at the closed end of an FX WATS or CCSA service or any service that is substantially equivalent to a CCSA service.

(ee) *Public telephone* is a telephone provided by a telephone company through which an end user may originate interstate or foreign telecommunications for which he pays with coins or by credit card, collect or third number billing procedures.

(ff) *Return component* means net investment attributable to a particular element or category multiplied by the authorized annual rate of return.

(gg) *Subscriber line cable and wire facilities* means all lines or trunks on the subscriber side of a Class 5 or end office switch, including lines or trunks that do not terminate in such a switch, except lines or trunks that connect an interexchange carrier.

(hh) *Telephone company* or *Local exchange carrier* as used in this part means an incumbent local exchange carrier as defined in section 251(h)(1) of

the 1934 Act as amended by the 1996 Act.

(ii) *Transitional support* (TRS) means funds provided by telephone companies that are not association Common Line tariff participants, but were net contributors to the association Common Line pool in 1988, to telephone companies that are not association Common Line tariff participants and were net receivers from the association Common Line pool in 1988.

(jj) *Unit of capacity* means the capability to transmit one conversation.

(kk) *WATS access line* means a line or trunk that is used exclusively for WATS service.

(ll) *Equal access investment and equal access expenses* mean equal access investment and expenses as defined for purposes of the part 36 separations rules.

(mm) *Basic service elements* are optional unbundled features that enhanced service providers may require or find useful in the provision of enhanced services, as defined in Amendments of part 69 of the Commission's rules relating to the Creation of Access Charge Subelements for Open Network Architecture, Report and Order, 6 FCC Rcd _____, CC Docket No. 89–79, FCC 91–186 (1991).

(nn) *Dedicated signalling transport* means transport of out-of-band signalling information between an interexchange carrier or other person's common channel signalling network and a telephone company's signalling transport point on facilities dedicated to the use of a single customer.

(oo) *Direct-trunked transport* means transport on circuits dedicated to the use of a single interexchange carrier or other person, without switching at the tandem,

(1) Between the serving wire center and the end office, or

(2) Between two customer-designated telephone company offices.

(pp) *End office* means the telephone company office from which the end user receives exchange service.

(qq) *Entrance facilities* means transport from the interexchange carrier or other person's point of demarcation to the serving wire center.

(rr) *Serving wire center* means the telephone company central office designated by the telephone company to serve the geographic area in which the interexchange carrier or other person's point of demarcation is located.

(ss) *Tandem-switched transport* means transport of traffic that is switched at a tandem switch—

(1) Between the serving wire center and the end office, or

(2) Between the telephone company office containing the tandem switching equipment, as described in § 36.124 of this chapter, and the end office.

Tandem-switched transport between a serving wire center and an end office consists of circuits dedicated to the use of a single interexchange carrier or other person from the serving wire center to the tandem (although this dedicated link will not exist if the serving wire center and the tandem are located in the same place) and circuits used in common by multiple interexchange carriers or other persons from the tandem to the end office.

(tt) [Reserved]

(uu) *Price cap regulation* means the method of regulation of dominant carriers provided in §§ 61.41 through 61.49 of this chapter.

(vv) *Signalling for tandem switching* means the carrier identification code (CIC) and the OZZ code, or equivalent information needed to perform tandem switching functions. The CIC identifies the interexchange carrier and the OZZ identifies the interexchange carrier trunk to which traffic should be routed.

(ww) *Interstate common line support (ICLS)* means funds that are provided pursuant to § 54.901 of this chapter.

[52 FR 37309, Oct. 6, 1987]

EDITORIAL NOTE: For FEDERAL REGISTER citations affecting § 69.2, see the List of CFR Sections Affected, which appears in the Finding Aids section of the printed volume and at *www.fdsys.gov*.

§ 69.3 Filing of access service tariffs.

(a) Except as provided in paragraphs (g) and (h) of this section, a tariff for access service shall be filed with this Commission for a two-year period. Such tariffs shall be filed with a scheduled effective date of July 1. Such tariff filings shall be limited to rate level changes.

(b) The requirements imposed by paragraph (a) of this section shall not preclude the filing of revisions to those annual tariffs that will become effective on dates other than July 1.

(c) Any access service tariff filing, the filing of any petitions for rejection, investigation or suspension and the filing of any responses to such petitions shall comply with the applicable rules of this Commission relating to tariff filings.

(d) The association shall file a tariff as agent for all telephone companies that participate in an association tariff.

(e) A telephone company or group of telephone companies may file a tariff that is not an association tariff. Such a tariff may cross-reference the association tariff for some access elements and include separately computed charges of such company or companies for other elements. Any such tariff must comply with the requirements hereinafter provided:

(1) Such a tariff must cross reference association charges for the Carrier Common Line and End User Common Line element or elements if such company or companies participate in the pooling of revenues and revenue requirements for such elements.

(2) Such a tariff that cross-references an association charge for any end user access element must cross-reference association charges for all end user access elements;

(3) Such a tariff that cross-references an association charge for any carrier's carrier access element other than the Carrier Common Line element must cross-reference association charges for all carrier's carrier access charges other than the Carrier Common Line element;

(4) Except for charges subject to price cap regulation as that term is defined in §61.3(v) of this chapter, any charge in such a tariff that is not an association charge must be computed to reflect the combined investment and expenses of all companies that participate in such a charge;

(5) A telephone company or companies that elect to file such a tariff for 1984 access charges shall notify AT&T on or before the 40th day after the release of the Commission order adopting this part;

(6) Except as provided in paragraph (e)(12) of this section, a telephone company or companies that elect to file such a tariff shall notify the association not later than March 1 of the year the tariff becomes effective, if such company or companies did not file such a tariff in the preceding biennial period or cross-reference association charges in such preceding period that will be cross-referenced in the new tariff. A telephone company or companies that elect to file such a tariff not in the biennial period shall file its tariff to become effective July 1 for a period of one year. Thereafter, such telephone company or companies must file its tariff pursuant to paragraphs (f)(1) or (f)(2) of this section.

(7) Such a tariff shall not contain charges for any access elements that are disaggregated or deaveraged within a study area that is used for purposes of jurisdictional separations, except as otherwise provided in this chapter.

(8) Such a tariff shall not contain charges included in the billing and collection category.

(9) Except as provided in paragraph (e)(12) of this section, a telephone company or group of affiliated telephone companies that elects to file its own Carrier Common Line tariff pursuant to paragraph (a) of this section shall notify the association not later than March 1 of the year the tariff becomes effective that it will no longer participate in the association tariff. A telephone company or group of affiliated telephone companies that elects to file its own Carrier Common Line tariff for one of its study areas shall file its own Carrier Common Line tariff(s) for all of its study areas.

(10) Any data supporting a tariff that is not an association tariff shall be consistent with any data that the filing carrier submitted to the association.

(11) Any changes in Association common line tariff participation and Long Term and Transitional Support resulting from the merger or acquisition of telephone properties are to be made effective on the next annual access tariff

filing effective date following consummation of the merger or acquisition transaction, in accordance with the provisions of § 69.3(e)(9).

(12)(i) A local exchange carrier, or a group of affiliated carriers in which at least one carrier is engaging in access stimulation, as that term is defined in § 61.3(bbb) of this chapter, shall file its own access tariffs within forty-five (45) days of commencing access stimulation, as that term is defined in § 61.3(bbb) of this chapter, or within forty-five (45) days of December 29, 2011 if the local exchange carrier on that date is engaged in access stimulation, as that term is defined in § 61.3(bbb) of this chapter.

(ii) Notwithstanding paragraphs (e)(6) and (e)(9) of this section, a local exchange carrier, or a group of affiliated carriers in which at least one carrier is engaging in access stimulation, as that term is defined in § 61.3(bbb) of this chapter, must withdraw from all interstate access tariffs issued by the association within forty-five (45) days of engaging in access stimulation, as that term is defined in § 61.3(bbb) of this chapter, or within forty-five (45) days of December 29, 2011 if the local exchange carrier on that date is engaged in access stimulation, as that term is defined in § 61.3(bbb) of this chapter.

(iii) Any such carrier(s) shall notify the association when it begins access stimulation, or on December 29, 2011 if it is engaged in access stimulation, as that term is defined in § 61.3(bbb) of this chapter, on that date, of its intent to leave the association tariffs within forty-five (45) days.

(f)(1) A tariff for access service provided by a telephone company that is required to file an access tariff pursuant to § 61.38 of this Chapter shall be filed for a biennial period and with a scheduled effective date of July 1 of any even numbered year.

(2) A tariff for access service provided by a telephone company that may file an access tariff pursuant to § 61.39 of this Chapter shall be filed for a biennial period and with a scheduled effective date of July 1 of any odd numbered year. Any such telephone company that does not elect to file an access tariff pursuant to the § 61.39 procedures, and does not participate in the Association tariff, and does not elect to become subject to price cap regulation, must file an access tariff pursuant to § 61.38 for a biennial period and with a scheduled effective date of July 1 of any even numbered year.

(3) For purposes of computing charges for access elements other than Common Line elements to be effective on July 1 of any even-numbered year, the association may compute rate changes based upon statistical methods which represent a reasonable equivalent to the cost support information otherwise required under part 61 of this chapter.

(g) The following rules apply to telephone company participation in the Association common line pool for telephone companies involved in a merger or acquisition.

(1) Notwithstanding the requirements of § 69.3(e)(9), any Association common line tariff participant that is party to a merger or acquisition may continue to participate in the Association common line tariff.

(2) Notwithstanding the requirements of § 69.3(e)(9), any Association common line tariff participant that is party to a merger or acquisition may include other telephone properties involved in the transaction in the Association common line tariff, provided that the net addition of common lines to the Association common line tariff resulting from the transaction in not greater than 50,000, and provided further that, if any common lines involved in a merger or acquisition are returned to the Association common line tariff, all of the common lines involved in the merger or acquisition must be returned to the Association common line tariff.

(3) Telephone companies involved in mergers or acquisitions that wish to have more than 50,000 common lines reenter the Association common line pool must request a waiver of § 69.3(e)(9). If the telephone company has met all other legal obligations, the waiver request will be deemed granted on the sixty-first (61st) day from the date of public notice inviting comment on the requested waiver unless:

(i) The merger or acquisition involves one or more partial study areas;

(ii) The waiver includes a request for confidentiality of some or all of the materials supporting the request;

(iii) The waiver includes a request to return only a portion of the telephone properties involved in the transaction to the Association common line tariff;

(iv) The Commission rejects the waiver request prior to the expiration of the sixty-day period;

(v) The Commission requests additional time or information to process the waiver application prior to the expiration of the sixty-day period; or

(vi) A party, in a timely manner, opposes a waiver request or seeks conditional approval of the waiver in response to our public notice of the waiver request.

(h) Local exchange carriers subject to price cap regulation as that term is defined in § 61.3(ee) of this chapter, shall file with this Commission a price cap tariff for access service for an annual period. Such tariffs shall be filed to meet the notice requirements of § 61.58 of this chapter, with a scheduled effective date of July 1. Such tariff filings shall be limited to changes in the Price Cap Indexes, rate level changes (with corresponding adjustments to the affected Actual Price Indexes and Service Band Indexes), and the incorporation of new services into the affected indexes as required by § 61.49 of this chapter.

(i) The following rules apply to the withdrawal from Association tariffs under the provision of paragraph (e)(6) or (e)(9) of this section or both by telephone companies electing to file price cap tariffs pursuant to paragraph (h) of this section.

(1) In addition to the withdrawal provisions of paragraphs (e)(6) and (e)(9) of this section, a telephone company or group of affiliated companies that participates in one or more association tariffs during the current tariff year and that elects to file price cap tariffs or optional incentive regulation tariffs effective July 1 of the following tariff year shall notify the association by March 1 of the following tariff year that it is withdrawing from association tariffs, subject to the terms of this section, to participate in price cap regulation or optional incentive regulation.

(2) The Association shall maintain records of such withdrawals sufficient to discharge its obligations under these Rules and to detect efforts by such companies or their affiliates to rejoin any Association tariffs in violation of the provisions of paragraph (i)(4) of this section.

(3) Notwithstanding the provisions of paragraphs (e) (3), (6), and (9) of this section, in the event a telephone company withdraws from all Association tariffs for the purpose of filing price cap tariffs or optional incentive plan tariffs, such company shall exclude from such withdrawal all ''average schedule'' affiliates and all affiliates so excluded shall be specified in the withdrawal. However, such company may include one or more ''average schedule'' affiliates in price cap regulation or optional incentive plan regulation provided that each price cap or optional incentive plan affiliate relinquishes ''average schedule'' status and withdraws from all Association tariffs and any tariff filed pursuant to § 61.39(b)(2) of this chapter. See generally §§ 69.605(c), 61.39(b) of this chapter; MTS and WATS Market Structure: Average Schedule Companies, Report and Order, 103 FCC 2d 1026–1027 (1986).

(4) If a telephone company elects to withdraw from Association tariffs and thereafter becomes subject to price cap regulation as that term is defined in § 61.3(v) of this chapter, neither such telephone company nor any of its withdrawing affiliates shall thereafter be permitted to participate in any Association tariffs.

(j) [Reserved]

(47 U.S.C. 154 (i) and (j), 201, 202, 203, 205, 218 and 403 and 5 U.S.C. 553)

[48 FR 10358, Mar. 11, 1983]

EDITORIAL NOTE: For FEDERAL REGISTER citations affecting § 69.3, see the List of CFR Sections Affected, which appears in the Finding Aids section of the printed volume and at *www.fdsys.gov*.

§ 69.4 Charges to be filed.

(a) The end user charges for access service filed with this Commission shall include charges for the End User Common Line element, and for line port costs in excess of basic, analog service.

(b) Except as provided in paragraphs (c), (e), and (h) of this section, and in § 69.118, the carrier's carrier charges for access service filed with this Commission shall include charges for each of the following elements:

(1) [Reserved]

(2) Carrier common line, provided that after June 30, 2003, non-price cap local exchange carriers may not assess a carrier common line charge;

(3) Local switching;

(4) Information;

(5) Tandem-switched transport;

(6) Direct-trunked transport;

(7) Special access; and

(8) Line information database;

(9) Entrance facilities.

(c) [Reserved]

(d) Recovery of Contributions to the Universal Service Support Mechanisms by Incumbent Local Exchange Carriers.

(1) [Reserved]

(2)(i) Local exchange carriers may recover their contributions to the universal service support mechanisms only through explicit, interstate, end-user charges assessed pursuant to either § 69.131 or § 69.158 that are equitable and nondiscriminatory.

(ii) Local exchange carriers may not recover any of their contributions to the universal service support mechanisms through access charges imposed on interexchange carriers.

(e) The carrier's carrier charges for access service filed with this Commission by the telephone companies specified in § 64.1401(a) of this chapter shall include an element for connection charges for expanded interconnection. The carrier's carrier charges for access service filed with this Commission by the telephone companies not specified in § 64.1401(a) of this chapter may include an element for connection charges for expanded interconnection.

(f) [Reserved]

(g) Local exchange carriers may establish appropriate rate elements for a new service, within the meaning of § 61.3(x) of this chapter, in any tariff filing.

(h) In addition to the charges specified in paragraph (b) of this section, the carrier's carrier charges for access service filed with this Commission by price cap local exchange carriers shall include charges for each of the following elements:

(1) Presubscribed interexchange carrier;

(2) Per-minute residual interconnection;

(3) Dedicated local switching trunk port;

(4) Shared local switching trunk pork;

(5) Dedicated tandem switching trunk port;

(6) [Reserved]

(7) Multiplexers associated with tandem switching.

(i) Paragraphs (b) and (h) of this section are not applicable to a price cap local exchange carrier to the extent that it has been granted the pricing flexibility in § 69.727(b)(1).

(j) In addition to the charges specified in paragraph (b) of this section, the carrier's carrier charges for access service filed with this Commission by non-price cap local exchange carriers may include charges for each of the following elements:

(1) Dedicated local switching trunk port;

(2) Shared local switching trunk port;

(3) Dedicated tandem switching trunk port;

(4) Multiplexers associated with tandem switching;

(5) DS1/voice grade multiplexers associated with analog switches; and

(6) Per-message call setup.

[48 FR 43017, Sept. 21, 1983]

EDITORIAL NOTE: For FEDERAL REGISTER citations affecting § 69.4, see the List of CFR Sections Affected, which appears in the Finding Aids section of the printed volume and at *www.fdsys.gov*.

§ 69.5 Persons to be assessed.

(a) End user charges shall be computed and assessed upon public end users, and upon providers of public telephones, as defined in this subpart, and as provided in subpart B of this part.

(b) Carrier's carrier charges shall be computed and assessed upon all interexchange carriers that use local exchange switching facilities for the provision of interstate or foreign telecommunications services.

(c) Special access surcharges shall be assessed upon users of exchange facilities that interconnect these facilities with means of interstate or foreign telecommunications to the extent that carrier's carrier charges are not assessed upon such interconnected usage. As an interim measure pending the development of techniques accurately to measure such interconnected use and to assess such charges on a reasonable and non-discriminatory basis, telephone companies shall assess special access surcharges upon the closed ends of private line services and WATS services pursuant to the provisions of § 69.115 of this part.

(d) [Reserved]

(47 U.S.C. 154 (i) and (j), 201, 202, 203, 205, 218 and 403 and 5 U.S.C. 553)

[48 FR 43017, Sept. 21, 1983, as amended at 51 FR 10840, Mar. 31, 1986; 51 FR 33752, Sept. 23, 1986; 52 FR 21540, June 8, 1987; 54 FR 50624, Dec. 8, 1989; 61 FR 65364, Dec. 12, 1996; 64 FR 60359, Nov. 5, 1999]

Subpart B—Computation of Charges

§ 69.101 General.

Except as provided in § 69.1 and subpart C of this part, charges for each access element shall be computed and assessed as provided in this subpart.

[55 FR 42386, Oct. 19, 1990]

§ 69.104 End user common line for non-price cap incumbent local exchange carriers.

(a) This section is applicable only to incumbent local exchange carriers that are not subject to price cap regulation as that term is defined in § 61.3(ee) of this chapter. A charge that is expressed in dollars and cents per line per month shall be assessed upon end users that subscribe to local exchange telephone service or Centrex service to the extent they do not pay carrier common line charges. A charge that is expressed in dollars and cents per line per month shall be assessed upon providers of public telephones. Such charges shall be assessed for each line between the premises of an end user, or public telephone location, and a Class 5 office that is or may be used for local exchange service transmissions.

(b) Charges to multi-line subscribers shall be computed by multiplying a single line rate by the number of lines used by such subscriber.

(c) Until December 31, 2001, except as provided in paragraphs (d) through (h) of this section, the single-line rate or charge shall be computed by dividing one-twelfth of the projected annual revenue requirement for the End User Common Line element by the projected average number of local exchange service subscriber lines in use during such annual period.

(d)(1) Until December 31, 2001, if the monthly charge computed in accordance with paragraph (c) of this section exceeds $6, the charge for each local exchange service subscriber line, except a residential line, a single-line business line, or a line used for Centrex-CO service that was in place or on order as of July 27, 1983, shall be $6.

(2) Until December 31, 2001, the charge for each subscriber line associated with a public telephone shall be equal to the monthly charge computed in accordance with paragraph (d)(1) of this section.

(e) Until December 31, 2001, the monthly charge for each residential and single-line business local exchange service subscriber shall be the charge computed in accordance with paragraph (c) of this section, or $3.50, whichever is lower.

(f) Except as provided in § 54.403 of this chapter, the charge for each residential local exchange service subscriber line shall be the same as the charge for each single-line business local exchange service subscriber line.

(g) A line shall be deemed to be a residential line if the subscriber pays a rate for such line that is described as a residential rate in the local exchange service tariff.

(h) A line shall be deemed to be a single line business line if the subscriber pays a rate that is not described as a residential rate in the local exchange service tariff and does not obtain more than one such line from a particular telephone company.

(i) The End User Common Line charge for each multi-party subscriber shall be assessed as if such subscriber had subscribed to single-party service.

(j)–(l) [Reserved]

(m) No charge shall be assessed for any WATS access line.

(n)(1) Beginning January 1, 2002, except as provided in paragraph (r) of this section, the maximum monthly charge for each residential or single-line business local exchange service subscriber line shall be the lesser of:

(i) One-twelfth of the projected annual revenue requirement for the End User Common Line element divided by the projected average number of local exchange service subscriber lines in use during such annual period; or

(ii) The following:

(A) Beginning January 1, 2002, $5.00.

(B) Beginning July 1, 2002, $6.00.

(C) Beginning July 1, 2003, $6.50.

(2) In the event that GDP-PI exceeds 6.5% or is less than 0%, the maximum monthly charge in paragraph (n)(1)(ii) of this section will be adjusted in the same manner as the adjustment in § 69.152(d)(2).

(o)(1) Beginning on January 1, 2002, except as provided in paragraph (r) of this section, the maximum monthly End User Common Line Charge for multi-line business lines will be the lesser of:

(i) $9.20; or

(ii) One-twelfth of the projected annual revenue requirement for the End User Common Line element divided by the projected average number of local exchange service subscriber lines in use during such annual period;

(2) In the event that GDP-PI is greater than 6.5% or is less than 0%, the maximum monthly charge in paragraph (o)(1)(i) of this section will be adjusted in the same manner as the adjustment in § 69.152(k)(2).

(p) Beginning January 1, 2002, non-price cap local exchange carriers shall assess:

(1) No more than one End User Common Line charge as calculated under the applicable method under paragraph (n) of this section for Basic Rate Interface integrated services digital network (ISDN) service.

(2) No more than five End User Common Line charges as calculated under paragraph (o) of this section for Primary Rate Interface ISDN service.

(q) In the event a non-price cap local exchange carrier charges less than the maximum End User Common Line charge for any subscriber lines, the carrier may not recover the difference between the amount collected and the maximum from carrier common line charges, Interstate Common Line Support, or Long Term Support.

(r) *End User Common Line charge deaveraging*. Beginning on January 1, 2002, non-price cap local exchange carriers may geographically deaverage End User Common Line charges subject to the following conditions.

(1) In order for a non-price cap local exchange carrier to be allowed to deaverage End User Common Line charges within a study area, the non-price cap local exchange carrier must have:

(i) State commission-approved geographically deaveraged rates for UNE loops within that study area; or

(ii) A universal service support disaggregation plan established pursuant to § 54.315 of this chapter.

(2) All geographic deaveraging of End User Common Line charges by customer class within a study area must be according to the state commission-approved UNE loop zone, or the universal service support disaggregation plan established pursuant to § 54.315 of this chapter.

(3) Within a given zone, Multi-line Business End User Common Line rates cannot fall below Residential and Single-Line Business rates.

(4) For any given class of customer in any given zone, the End User Common Line Charge in that zone must be greater than or equal to the End User Common Line charge in the zone with the next lower cost per line.

(5) A non-price cap local exchange carrier shall not receive more through deaveraged End User Common Line charges than it would have received if it had not deaveraged its End User Common Line charges.

(6) *Maximum charge*. The maximum zone deaveraged End User Common Line Charge that may be charged in any zone is the applicable cap specified in paragraphs (n) or (o) of this section.

(7) *Voluntary Reductions*. A ''Voluntary Reduction'' is one in which the non-price cap local exchange carrier charges End User Common Line rates below the maximum charges specified

in paragraphs (n)(1) or (o)(1) of this section other than through offset of net increases in End User Common Line charge revenues or through increases in other zone deaveraged End User Common Line charges.

[48 FR 10358, Mar. 11, 1983, as amended at 48 FR 43018, Sept. 21, 1983; 52 FR 21540, June 8, 1987; 53 FR 28395, July 28, 1988; 61 FR 65364, Dec. 12, 1996; 62 FR 31933, June 11, 1997; 62 FR 32962, June 17, 1997; 66 FR 59730, Nov. 30, 2001]

§ 69.105 Carrier common line for non-price cap local exchange carriers.

(a) This section is applicable only to local exchange carriers that are not subject to price cap regulation as that term is defined in § 61.3(ee) of this chapter. Until June 30, 2003, a charge that is expressed in dollars and cents per line per access minute of use shall be assessed upon all interexchange carriers that use local exchange common line facilities for the provision of interstate or foreign telecommunications services, except that the charge shall not be assessed upon interexchange carriers to the extent they resell MTS or MTS-type services of other common carriers (OCCs).

(b)(1) For purposes of this section and § 69.113:

(i) A carrier or other person shall be deemed to receive premium access if access is provided through a local exchange switch that has the capability to provide access for an MTS-WATS equivalent service that is substantially equivalent to the access provided for MTS or WATS, except that access provided for an MTS-WATS equivalent service that does not use such capability shall not be deemed to be premium access until six months after the carrier that provides such MTS-WATS equivalent service receives actual notice that such equivalent access is or will be available at such switch;

(ii) The term *open end* of a call describes the origination or termination of a call that utilizes exchange carrier common line plant (a call can have no, one, or two open ends); and

(iii) All open end minutes on calls with one open end (e.g., an 800 or FX call) shall be treated as terminating minutes.

(2) For association Carrier Common Line tariff participants:

(i) The premium originating Carrier Common Line charge shall be one cent per minute, except as described in § 69.105(b)(3), and

(ii) The premium terminating Carrier Common Line charge shall be computed as follows:

(A) For each telephone company subject to price cap regulation, multiply the company's proposed premium originating rate by a number equal to the sum of the premium originating base period minutes and a number equal to 0.45 multiplied by the non-premium originating base period minutes of that telephone company;

(B) For each telephone company subject to price cap regulation, multiply the company's proposed premium terminating rate by a number equal to the sum of the premium terminating base period minutes and a number equal to 0.45 multiplied by the non-premium terminating base period minutes of that telephone company;

(C) Sum the numbers computed in paragraphs (b)(2)(ii) (A) and (B) of this section for all companies subject to price cap regulation;

(D) From the number computed in paragraph (b)(2)(ii)(C) of this section, subtract a number equal to one cent times the sum of the premium originating base period minutes and a number equal to 0.45 multiplied by the non-premium originating base period minutes of all telephone companies subject to price cap regulation, and;

(E) Divide the number computed in paragraph (b)(2)(ii)(D) of this section by the sum of the premium terminating base period minutes and a number equal to 0.45 multiplied by the non-premium terminating base period minutes of all telephone companies subject to price cap regulation.

(3) If the calculations described in § 69.105(b)(2) result in a per minute charge on premium terminating minutes that is less than once cent, both the originating and terminating premium charges for the association CCL tariff participants shall be computed by dividing the number computed in paragraph (b)(2)(ii)(C) of this section by a number equal to the sum of the premium originating and terminating base period minutes and a number equal to 0.45 multiplied by the sum of the non-

premium originating and terminating base period minutes of all telephone companies subject to price cap regulation.

(4) The Carrier Common Line charges of telephone companies that are not association Carrier Common Line tariff participants shall be computed at the level of Carrier Common Line access element aggregation selected by such telephone companies pursuant to § 69.3(e)(7). For each such Carrier Common Line access element tariff—

(i) The premium originating Carrier Common Line charge shall be one cent per minute, and

(ii) The premium terminating Carrier Common Line charge shall be computed by subtracting the projected revenues generated by the originating Carrier Common Line charges (both premium and non-premium) from the Carrier Common Line revenue requirement for the companies participating in that tariff, and dividing the remainder by the sum of the projected premium terminating minutes and a number equal to .45 multiplied by the projected non-premium terminating minutes for such companies.

(5) If the calculations described in § 69.105(b)(4) result in a per minute charge on premium terminating minutes that is less than one cent, both the originating and terminating premium charges for the companies participating in said Carrier Common Line tariff shall be computed by dividing the projected Carrier Common Line revenue requirement for such companies by the sum of the projected premium minutes and a number equal to .45 multiplied by the projected non-premium minutes for such companies.

(6) Telephone companies that are not association Carrier Common Line tariff participants shall submit to the Commission and to the association whatever data the Commission shall determine are necessary to calculate the charges described in this section.

(c) Any interexchange carrier shall receive a credit for Carrier Common Line charges to the extent that it resells services for which these charges have already been assessed (e.g., MTS or MTS-type service of other common carriers).

(d) From July 1, 2002, to June 30, 2003, the carrier common line charge calculations pursuant to this section shall be limited to an amount equal to the number of projected residential and single-line business lines multiplied by the difference between the residential and single-line business End User Common Line rate cap and the lesser of $6.50 or the non-price cap local exchange carrier's average cost per line.

[51 FR 10841, Mar. 31, 1986, as amended at 52 FR 21541, June 8, 1987; 54 FR 6293, Feb. 9, 1989; 55 FR 42386, Oct. 19, 1990; 56 FR 21618, May 10, 1991; 62 FR 31933, June 11, 1997; 66 FR 59731, Nov. 30, 2001]

§ 69.106 Local switching.

(a) Except as provided in § 69.118, charges that are expressed in dollars and cents per access minute of use shall be assessed by local exchange carriers that are not subject to price cap regulation upon all interexchange carriers that use local exchange switching facilities for the provision of interstate or foreign services.

(b) The per minute charge described in paragraph (a) of this section shall be computed by dividing the projected annual revenue requirement for the Local Switching element, excluding any local switching support received by the carrier pursuant to § 54.301 of this chapter, by the projected annual access minutes of use for all interstate or foreign services that use local exchange switching facilities.

(c) If end users of an interstate or foreign service that uses local switching facilities pay message unit charges for such calls in a particular exchange, a credit shall be deducted from the Local Switching element charges to such carrier for access service in such exchange. The per minute credit for each such exchange shall be multiplied by the monthly access minutes for such service to compute the monthly credit to such a carrier.

(d) If all local exchange subscribers in such exchange pay message unit charges, the per minute credit described in paragraph (c) of this section shall be computed by dividing total message unit charges to all subscribers in a particular exchange in a representative month by the total minutes of use that were measured for purposes of

computing message unit charges in such month.

(e) If some local exchange subscribers pay message unit charges and some do not, a per minute credit described in paragraph (c) of this section shall be computed by multiplying a credit computed pursuant to paragraph (d) of this section by a factor that is equal to total minutes measured in such month for purposes of computing message unit charges divided by the total local exchange minutes in such month.

(f) Except as provided in § 69.118, price cap local exchange carriers shall establish rate elements for local switching as follows:

(1) Price cap local exchange carriers shall separate from the projected annual revenues for the Local Switching element those costs projected to be incurred for ports (including cards and DS1/voice-grade multiplexers required to access end offices equipped with analog switches) on the trunk side of the local switch. Price cap local exchange carriers shall further identify costs incurred for dedicated trunk ports separately from costs incurred for shared trunk ports.

(i) Price cap local exchange carriers shall recover dedicated trunk port costs identified pursuant to paragraph (f)(1) of this section through flat-rated charges expressed in dollars and cents per trunk port and assessed upon the purchaser of the dedicated trunk terminating at the port.

(ii) Price cap local exchange carriers shall recover shared trunk port costs identified pursuant to paragraph (f)(1) of this section through charges assessed upon purchasers of shared transport. This charge shall be expressed in dollars and cents per access minute of use. The charge shall be computed by dividing the projected costs of the shared ports by the historical annual access minutes of use calculated for purposes of recovery of common transport costs in § 69.111(c).

(2) Price cap local exchange carriers shall recover the projected annual revenues for the Local Switching element that are not recovered in paragraph (f)(1) of this section through charges that are expressed in dollars and cents per access minute of use and assessed upon all interexchange carriers that use local exchange switching facilities for the provision of interstate or foreign services. The maximum charge shall be computed by dividing the projected remainder of the annual revenues for the Local Switching element by the historical annual access minutes of use for all interstate or foreign services that use local exchange switching facilities.

(g) A local exchange carrier may recover signaling costs associated with call setup through a call setup charge imposed upon all interstate interexchange carriers that use that local exchange carrier's facilities to originate or terminate interstate interexchange or foreign services. This charge must be expressed as dollars and cents per call attempt and may be assessed on originating calls handed off to the interexchange carrier's point of presence and on terminating calls received from an interexchange carrier's point of presence, whether or not that call is completed at the called location. Local exchange carriers may not recover through this charge any costs recovered through other rate elements.

(h) Except as provided in § 69.118, non-price cap local exchange carriers may establish rate elements for local switching as follows:

(1) Non-price cap local exchange carriers may separate from the projected annual revenue requirement for the Local Switching element those costs projected to be incurred for ports (including cards and DS1/voice-grade multiplexers required to access end offices equipped with analog switches) on the trunk side of the local switch. Non-price cap local exchange carriers electing to assess these charges shall further identify costs incurred for dedicated trunk ports separately from costs incurred for shared trunk ports.

(i) Non-price cap local exchange carriers electing to assess trunk port charges shall recover dedicated trunk port costs identified pursuant to paragraph (h)(1) of this section through flat-rated charges expressed in dollars and cents per trunk port and assessed upon the purchaser of the dedicated trunk terminating at the port.

(ii) Non-price cap local exchange carriers electing to assess trunk port charges shall recover shared trunk port

costs identified pursuant to paragraph (h)(1) of this section through charges assessed upon purchasers of shared transport. This charge shall be expressed in dollars and cents per access minute of use. The charge shall be computed by dividing the projected costs of the shared ports by the historical annual access minutes of use calculated for purposes of recovery of common transport costs in § 69.111(c).

(2) Non-price cap local exchange carriers shall recover the projected annual revenue requirement for the Local Switching element that are not recovered in paragraph (h)(1) of this section through charges that are expressed in dollars and cents per access minute of use and assessed upon all interexchange carriers that use local exchange switching facilities for the provision of interstate or foreign services. The maximum charge shall be computed by dividing the projected remainder of the annual revenue requirement for the Local Switching element by the historical annual access minutes of use for all interstate or foreign services that use local exchange switching facilities.

[52 FR 37310, Oct. 6, 1987, as amended at 56 FR 33881, July 24, 1991; 62 FR 31933, June 11, 1997; 62 FR 40463, July 29, 1997; 66 FR 59731, Nov. 30, 2001]

§ 69.108 Transport rate benchmark.

(a) For transport charges computed in accordance with this subpart, the DS3-to-DS1 benchmark ratio shall be calculated as follows: the telephone company shall calculate the ratio of:

(1) The total charge for a 1.609 km (1 mi) channel termination, 16.09 km (10 mi) of interoffice transmission, and one DS3 multiplexer using the telephone company's DS3 special access rates to;

(2) The total charge for a 1.609 km (1 mi) channel termination plus 16.09 km (10 mi) of interoffice transmission using the telephone company's DS1 special access rates.

(b) Initial transport rates will generally be presumed reasonable if they are based on special access rates with a DS3-to-DS1 benchmark ratio of 9.6 to 1 or higher.

(c) If a telephone company's initial transport rates are based on special access rates with a DS3-to-DS1 benchmark ratio of less than 9.6 to 1, those initial transport rates will generally be suspended and investigated absent a substantial cause showing by the telephone company. Alternatively, the telephone company may adjust its initial transport rates so that the DS3-to-DS1 ratio calculated as described in paragraph (a) of this section of those rates is 9.6 or higher. In that case, initial transport rates that depart from existing special access rates effective on September 1, 1992 so as to be consistent with the benchmark will be presumed reasonable only so long as the ratio of revenue recovered through the interconnection charge to the revenue recovered through facilities-based charges is the same as it would be if the telephone company's existing special access rates effective on September 1, 1992 were used.

[58 FR 41189, Aug. 3, 1993, as amended at 58 FR 44952, Aug. 25, 1993; 58 FR 45267, Aug. 27, 1993]

§ 69.109 Information.

(a) A charge shall be assessed upon all interexchange carriers that are connected to assistance boards through interexchange directory assistance trunks.

(b) Except as provided in § 69.118, if such connections are maintained exclusively by carriers that offer MTS, the projected annual revenue requirement for the Information element shall be divided by 12 to compute the monthly assessment to such carriers.

(c) If such connections are provided to additional carriers, charges shall be established that reflect the relative use of such directory assistance service by such interexchange carriers.

[48 FR 10358, Mar. 11, 1983, as amended at 56 FR 33881, July 24, 1991]

§ 69.110 Entrance facilities.

(a) A flat-rated entrance facilities charge expressed in dollars and cents per unit of capacity shall be assessed upon all interexchange carriers and other persons that use telephone company facilities between the interexchange carrier or other person's point of demarcation and the serving wire center.

(b)(1) For telephone companies subject to price cap regulation, initial entrance facilities charges based on special access channel termination rates for equivalent voice grade, DS1, and DS3 services as of September 1, 1992, adjusted for changes in the price cap index calculated for the July 1, 1993 annual filing for telephone companies subject to price cap regulation, generally shall be presumed reasonable if the benchmark defined in § 69.108 is satisfied. Entrance facilities charges may be distance-sensitive. Distance shall be measured as airline kilometers between the point of demarcation and the serving wire center.

(2) For telephone companies not subject to price cap regulation, entrance facilities charges based on special access channel termination rates for equivalent voice grade, DS1, and DS3 services generally shall be presumed reasonable if the benchmark defined in § 69.108 is satisfied. Entrance facilities charges may be distance-sensitive. Distance shall be measured as airline kilometers between the point of demarcation and the serving wire center.

(c) If the telephone company employs distance-sensitive rates:

(1) A distance-sensitive component shall be assessed for use of the transmission facilities, including any intermediate transmission circuit equipment between the end points of the entrance facilities; and

(2) A nondistance-sensitive component shall be assessed for use of the circuit equipment at the ends of the transmission links.

(d) Telephone companies shall apply only their shortest term special access rates in setting entrance facilities charges.

(e) Except as provided in paragraphs (f), (g), and (h) of this section, and subpart H of this part, telephone companies shall not offer entrance facilities based on term discounts or volume discounts for multiple DS3s or any other service with higher volume than DS3.

(f) Except in the situations set forth in paragraphs (g) and (h) of this section, telephone companies may offer term and volume discounts in entrance facilities charges within each study area used for the purpose of jurisdictional separations, in which interconnectors have taken either:

(1) At least 100 DS1-equivalent cross-connects for the transmission of switched traffic (as described in § 69.121(a)(1) of this chapter) in offices in the study area that the telephone company has assigned to the lowest priced density pricing zone (zone 1) under an approved density pricing zone plan as described in §§ 61.38(b)(4) and 61.49(k) of this chapter; or

(2) An average of at least 25 DS1-equivalent cross-connects for the transmission of switched traffic per office assigned to the lowest priced density pricing zone (zone 1).

(g) In study areas in which the telephone company has implemented density zone pricing, but no offices have been assigned to the lowest price density pricing zone (zone 1), telephone companies may offer term and volume discounts in entrance facilities charges within the study area when interconnectors have taken at least 5 DS1-equivalent cross-connects for the transmission of switched traffic (as described in § 69.121(a)(1) of this chapter) in offices in the study area.

(h) In study areas in which the telephone company has not implemented density zone pricing, telephone companies may offer term and volume discounts in entrance facilities charges when interconnectors have taken at least 100 DS1-equivalent cross-connects for the transmission of switched traffic (as described in § 69.121(a)(1) of this chapter) in offices in the study area.

[57 FR 54720, Nov. 20, 1992, as amended at 58 FR 41190 and 41191, Aug. 3, 1993; 58 FR 44950, Aug. 25, 1993; 58 FR 48763, Sept. 17, 1993; 59 FR 10304, Mar. 4, 1994; 60 FR 50121, Sept. 28, 1995; 64 FR 51267, Sept. 22, 1999]

§ 69.111 Tandem-switched transport and tandem charge.

(a)(1) Through June 30, 1998, except as provided in paragraph (l) of this section, tandem-switched transport shall consist of two rate elements, a transmission charge and a tandem switching charge.

(2) Beginning July 1, 1998, except as provided in paragraph (l) of this section, tandem-switched transport shall consist of three rate elements as follows:

(i) A per-minute charge for transport of traffic over common transport facilities between the incumbent local exchange carrier's end office and the tandem switching office. This charge shall be expressed in dollars and cents per access minute of use and shall be assessed upon all purchasers of common transport facilities between the local exchange carrier's end office and the tandem switching office.

(ii) A per-minute tandem switching charge. This tandem switching charge shall be set in accordance with paragraph (g) of this section, excluding multiplexer and dedicated port costs recovered in accordance with paragraph (l) of this section, and shall be assessed upon all interexchange carriers and other persons that use incumbent local exchange carrier tandem switching facilities.

(iii) A flat-rated charge for transport of traffic over dedicated transport facilities between the serving wire center and the tandem switching office. This charge shall be assessed as a charge for dedicated transport facilities provisioned between the serving wire center and the tandem switching office in accordance with § 69.112.

(b) [Reserved]

(c)(1) Until June 30, 1998:

(i) Except in study areas where the incumbent local exchange carrier has implemented density pricing zones as described in section 69.123, per-minute common transport charges described in paragraph (a)(1) of this section shall be presumed reasonable if the incumbent local exchange carrier bases the charges on a weighted per-minute equivalent of direct-trunked transport DS1 and DS3 rates that reflects the relative number of DS1 and DS3 circuits used in the tandem to end office links (or a surrogate based on the proportion of copper and fiber facilities in the interoffice network), calculated using the total actual voice-grade minutes of use, geographically averaged on a study-area-wide basis, that the incumbent local exchange carrier experiences based on the prior year's annual use. Tandem-switched transport transmission charges that are not presumed reasonable shall be suspended and investigated absent a substantial cause showing by the incumbent local exchange carrier.

(ii) In study areas where the incumbent local exchange carrier has implemented density pricing zones as described in section 69.123, per-minute common transport charges described in paragraph (a)(1) of this section shall be presumed reasonable if the incumbent local exchange carrier bases the charges on a weighted per-minute equivalent of direct-trunked transport DS1 and DS3 rates that reflects the relative number of DS1 and DS3 circuits used in the tandem to end office links (or a surrogate based on the proportion of copper and fiber facilities in the interoffice network), calculated using the total actual voice-grade minutes of use, averaged on a zone-wide basis, that the incumbent local exchange carrier experiences based on the prior year's annual use. Tandem-switched transport transmission charges that are not presumed reasonable shall be suspended and investigated absent a substantial cause showing by the incumbent local exchange carrier.

(2) Beginning July 1, 1998:

(i) Except in study areas where the incumbent local exchange carrier has implemented density pricing zones as described in section 69.123, per-minute common transport charges described in paragraph (a)(2)(i) of this section shall be presumed reasonable if the incumbent local exchange carrier bases the charges on a weighted per-minute equivalent of direct-trunked transport DS1 and DS3 rates that reflects the relative number of DS1 and DS3 circuits used in the tandem to end office links (or a surrogate based on the proportion of copper and fiber facilities in the interoffice network), calculated using the total actual voice-grade minutes of use, geographically averaged on a study-area-wide basis, that the incumbent local exchange carrier experiences based on the prior year's annual use. Tandem-switched transport transmission charges that are not presumed reasonable shall be suspended and investigated absent a substantial cause showing by the incumbent local exchange carrier.

(ii) In study areas where the incumbent local exchange carrier has implemented density pricing zones as described in section 69.123, per-minute common transport charges described in paragraph (a)(2)(i) of this section shall be presumed reasonable if the incumbent local exchange carrier bases the charges on a weighted per-minute equivalent of direct-trunked transport DS1 and DS3 rates that reflects the relative number of DS1 and DS3 circuits used in the tandem to end office links (or a surrogate based on the proportion of copper and fiber facilities in the interoffice network), calculated using the total actual voice-grade minutes of use, averaged on a zone-wide basis, that the incumbent local exchange carrier experiences based on the prior year's annual use. Tandem-switched transport transmission charges that are not presumed reasonable shall be suspended and investigated absent a substantial cause showing by the incumbent local exchange carrier.

(d)(1) Through June 30, 1998, the tandem-switched transport transmission charges may be distance-sensitive. Distance shall be measured as airline distance between the serving wire center and the end office, unless the customer has ordered tandem-switched transport between the tandem office and the end office, in which case distance shall be measured as airline distance between the tandem office and the end office.

(2) Beginning July 1, 1998, the per-minute charge for transport of traffic over common transport facilities described in paragraph (a)(2)(i) of this section may be distance-sensitive. Distance shall be measured as airline distance between the tandem switching office and the end office.

(e)(1) Through June 30, 1998, if the telephone company employs distance-sensitive rates:

(i) A distance-sensitive component shall be assessed for use of the transmission facilities, including intermediate transmission circuit equipment between the end points of the interoffice circuit; and

(ii) A non-distance-sensitive component shall be assessed for use of the circuit equipment at the ends of the interoffice transmission links.

(2) Beginning July 1, 1998, if the telephone company employs distance-sensitive rates for transport of traffic over common transport facilities, as described in paragraph (a)(2)(i) of this section:

(i) A distance-sensitive component shall be assessed for use of the common transport facilities, including intermediate transmission circuit equipment between the end office and tandem switching office; and

(ii) A non-distance-sensitive component shall be assessed for use of the circuit equipment at the ends of the interoffice transmission links.

(f) [Reserved]

(g)(1) The tandem switching charge imposed pursuant to paragraphs (a)(1) or (a)(2)(ii) of this section, as applicable, shall be set to recover twenty percent of the annual part 69 interstate tandem revenue requirement plus one third of the portion of the tandem switching revenue requirement being recovered through the interconnection charge recovered by §§ 69.124, 69.153, and 69.155, excluding multiplexer and dedicated port costs recovered in accordance with paragraph (l) of this section.

(2) Beginning January 1, 1999, the tandem switching charge imposed pursuant to paragraph (a)(2)(ii) of this section shall be set to recover the amount prescribed in paragraph (g)(1) of this section plus one half of the remaining portion of the tandem switching revenue requirement then being recovered through the interconnection charge recovered by §§ 69.124, 69.153, and 69.155, excluding multiplexer and dedicated port costs recovered in accordance with paragraph (l) of this section.

(3) Beginning January 1, 2000, the tandem switching charge imposed pursuant to paragraph (a)(2)(ii) of this section shall be set to recover the entire interstate tandem switching revenue requirement, including that portion formerly recovered through the interconnection charge recovered in §§ 69.124, 69.153, and 69.155, and excluding multiplexer and dedicated port costs recovered in accordance with paragraph (l) of this section.

(4) A local exchange carrier that is subject to price cap regulation as that

term is defined in § 61.3(x) of this chapter shall calculate its tandem switching revenue requirement as used in this paragraph by dividing the tandem switching revenue requirement that was included in the original interconnection charge by the original interconnection charge, and then multiplying this result by the annual revenues recovered through the interconnection charge, described in § 69.124, as of June 30, 1997. A local exchange carrier that is subject to price cap regulation as that term is defined in § 61.3(x) of this chapter shall then make downward exogenous adjustments to the service band index for the interconnection charge service category (defined in § 61.42(e)(2)(vi) of this chapter) and corresponding upward adjustments to the service band index for the tandem-switched transport service category (defined in § 61.42(e)(2)(v) of this chapter) at the times and in the amounts prescribed in paragraphs (g)(1) through (g)(3) of this section .

(h) All telephone companies shall provide tandem-switched transport service.

(i) Except in the situations set forth in paragraphs (j) and (k) of this section, telephone companies may offer term and volume discounts in tandem-switched transport charges within each study area used for the purpose of jurisdictional separations, in which interconnectors have taken either:

(1) At least 100 DS1-equivalent cross-connects for the transmission of switched traffic (as described in § 69.121(a)(1) of this chapter) in offices in the study area that the telephone company has assigned to the lowest priced density pricing zone (zone 1) under an approved density pricing zone plan as described in §§ 61.38(b)(4) and 61.49(k) of this chapter; or

(2) An average of at least 25 DS1-equivalent cross-connects for the transmission of switched traffic per office assigned to the lowest priced density pricing zone (zone 1).

(j) In study areas in which the telephone company has implemented density zone pricing, but no offices have been assigned to the lowest priced density pricing zone (zone 1), telephone companies may offer term and volume discounts in tandem-switched transport charges within the study area when interconnectors have taken at least 5 DS1-equivalent cross-connects for the transmission of switched traffic (as described in § 69.121(a)(1) of this chapter) in offices in the study area.

(k) In study areas in which the telephone company has not implemented density zone pricing, telephone companies may offer term and volume discounts in tandem-switched transport charges when interconnectors have taken at least 100 DS1-equivalent cross-connects for the transmission of switched traffic (as described in § 69.121(a)(1) of this chapter) in offices in the study area.

(l) In addition to the charges described in this section, price cap local exchange carriers shall establish separate charges for multiplexers and dedicated trunk ports used in conjunction with the tandem switch as follows:

(1) Local exchange carriers must establish a traffic-sensitive charge for DS3/DS1 multiplexers used on the end office side of the tandem switch, assessed on purchasers of common transport to the tandem switch. This charge must be expressed in dollars and cents per access minute of use. The maximum charge shall be calculated by dividing the total costs of the multiplexers on the end office-side of the tandem switch by the annual access minutes of use calculated for purposes of recovery of common transport costs in paragraph (c) of this section. A similar charge shall be assessed for DS1/voice-grade multiplexing provided on the end-office side of analog tandem switches.

(2)(i) Local exchange carriers must establish a flat-rated charge for dedicated DS3/DS1 multiplexing on the serving wire center side of the tandem switch provided in conjunction with dedicated DS3 transport service from the serving wire center to the tandem switch. This charge shall be assessed on interexchange carriers purchasing tandem-switched transport in proportion to the number of DS3 trunks provisioned for that interexchange carrier between the serving wire center and the tandem-switch.

(ii) Local exchange carriers must establish a flat-rated charge for dedicated DS1/voice-grade multiplexing

provided on the serving wire center side of analog tandem switches. This charge may be assessed on interexchange carriers purchasing tandem-switched transport in proportion to the interexchange carrier's transport capacity on the serving wire center side of the tandem.

(3) Price cap local exchange carriers may recover the costs of dedicated trunk ports on the serving wire center side of the tandem switch only through flat-rated charges expressed in dollars and cents per trunk port and assessed upon the purchaser of the dedicated trunk terminating at the port.

(m) In addition to the charges described in this section, non-price cap local exchange carriers may establish separate charges for multiplexers and dedicated trunk ports used in conjunction with the tandem switch as follows:

(1)(i) Non-price cap local exchange carriers may establish a flat-rated charge for dedicated DS3/DS1 multiplexing on the serving wire center side of the tandem switch provided in conjunction with dedicated DS3 transport service from the serving wire center to the tandem switch. This charge shall be assessed on interexchange carriers purchasing tandem-switched transport in proportion to the number of DS3 trunks provisioned for that interexchange carrier between the serving wire center and the tandem switch.

(ii) Non-price cap local exchange carriers may establish a flat-rated charge for dedicated DS1/voice-grade multiplexing provided on the serving wire center side of analog tandem switches. This charge may be assessed on interexchange carriers purchasing tandem-switched transport in proportion to the interexchange carrier's transport capacity on the serving wire center side of the tandem.

(2) Non-price cap local exchange carriers may recover the costs of dedicated trunk ports on the serving wire center side of the tandem switch through flat-rated charges expressed in dollars and cents per trunk port and assessed upon the purchaser of the dedicated trunk terminating at the port.

[57 FR 54720, Nov. 20, 1992, as amended at 58 FR 41190, Aug. 3, 1993; 58 FR 48764, Sept. 17, 1993; 60 FR 50121, Sept. 28, 1995; 62 FR 31933, June 11, 1997; 62 FR 40463, July 29, 1997; 62 FR 56132, Oct. 29, 1997; 64 FR 46594, Aug. 26, 1999; 66 FR 59732, Nov. 30, 2001]

§ 69.112 Direct-trunked transport.

(a) A flat-rated direct-trunked transport charge expressed in dollars and cents per unit of capacity shall be assessed upon all interexchange carriers and other persons that use telephone company direct-trunked transport facilities.

(b)(1) For telephone companies subject to price cap regulation, initial direct-trunked transport charges based on the interoffice charges for equivalent voice grade, DS1, and DS3 special access services as of September 1, 1992, adjusted for changes in the price cap index calculated for the July 1, 1993 annual filing for telephone companies subject to price cap regulation, generally shall be presumed reasonable if the benchmark defined in § 69.108 is satisfied. Direct-trunked transport charges may be distance-sensitive. Distance shall be measured as airline kilometers between customer-designated points.

(2) For telephone companies not subject to price cap regulation, initial direct-trunked transport charges based on the interoffice charges for equivalent voice grade, DS1, and DS3 special access services generally shall be presumed reasonable if the benchmark defined in § 69.108 is satisfied. Direct-trunked transport charges may be distance-sensitive. Distance shall be measured as airline kilometers between customer-designated points.

(c) If the telephone company employs distance-sensitive rates:

(1) A distance-sensitive component shall be assessed for use of the transmission facilities, including intermediate transmission circuit equipment, between the end points of the circuit; and

(2) A nondistance-sensitive component shall be assessed for use of the circuit equipment at the ends of the transmission links.

(d) Telephone companies shall apply only their shortest term special access rates in setting direct-trunked transport rates.

(e) Except as provided in pagagraphs (f), (g), and (h) of this section, telephone companies shall not offer direct-trunked transport rates based on term discounts or volume discounts for multiple DS3s or any other service with higher volume than DS3.

(f) Except in the situations set forth in paragraphs (g) and (h) of this section, telephone companies may offer term and volume discounts in direct-trunked transport charges within each study area used for the purpose of jurisdictional separations, in which interconnectors have taken either:

(1) At least 100 DS1-equivalent cross-connects for the transmission of switched traffic (as described in § 69.121(a)(1)) in offices in the study area that the telephone company has assigned to the lowest priced density pricing zone (zone 1) under an approved density pricing zone plan as described in §§ 61.38(b)(4) and 61.49(k) of this section; or

(2) An average of at least 25 DS1-equivalent cross-connects for the transmission of switched traffic per office assigned to the lowest priced density pricing zone (zone 1).

(g) In study areas in which the telephone company has implemented density zone pricing, but no offices have been assigned to the lowest priced density pricing zone (zone 1), telephone companies may offer term and volume discounts in direct-trunked transport charges within the study area when interconnectors have taken at least 5 DS1-equivalent cross-connects for the transmission of switched traffic (as described in § 69.121(a)(1) of this chapter) in offices in the study area.

(h) In study areas in which the telephone company has not implemented density zone pricing, telephone companies may offer term and volume discounts in direct-trunked transport charges when interconnectors have taken at least 100 DS1-equivalent cross-connects for the transmission of switched traffic (as described in § 69.121(a)(1) of this chapter) in offices in the study area.

(i) Centralized equal access providers as described in Transport Rate Structure and Pricing, CC Docket No. 91–213, FCC 92–442, 7 FCC Rcd 7002 (1992), are not required to provide direct-trunked transport service. Telephone companies that do not have measurement and billing capabilities at their end offices are not required to provide direct-trunked transport services at those end offices without measurement and billing capabilities. Telephone companies that are not classified as Class A companies under § 32.11 of this chapter are required to provide direct-trunked transport service upon request. All other telephone companies shall provide a direct-trunked transport service.

[57 FR 54720, Nov. 20, 1992, as amended at 58 FR 41190, Aug. 3, 1993; 58 FR 44950, Aug. 25, 1993; 58 FR 48764, Sept. 17, 1993; 60 FR 50121, Sept. 28, 1995]

§ 69.113 Non-premium charges for MTS-WATS equivalent services.

(a) Charges that are computed in accordance with this section shall be assessed upon interexchange carriers or other persons that receive access that is not deemed to be premium access as this term in defined in § 69.105(b)(1) in lieu of carrier charges that are computed in accordance with §§ 69.105, 69.106, 69.118, 69.124, and 69.127.

(b) The non-premium charge for the Carrier Common Line element shall be computed by multiplying the premium charge for such element by .45.

(c) For telephone companies that are not subject to price cap regulation as that term is defined in § 61.3(x) of this chapter, the non-premium charge for the Local Switching element shall be computed by multiplying a hypothetical premium charge for such element by .45. The hypothetical premium charge for such element shall be computed by dividing the annual revenue requirement for each element by the sum of the projected access minutes for such period and a number that is computed by multiplying the projected non-premium minutes for such element for such period by .45. For telephone companies that are price cap carriers, the non-premium charge for the Local Switching element shall be computed by multiplying the premium charge for such element by .45. Though June 30,

1993, the non-premium charge shall be computed by multiplying the LS2 charge for such element by .45.

(d) The non-premium charge or charges for the interconnection charge element shall be computed by multiplying the corresponding premium charge or charges by .45.

(e) The non-premium charge for any BSEs in local switching shall be computed by multiplying the premium charge for the corresponding BSEs by .45.

[54 FR 6293, Feb. 9, 1989, as amended at 55 FR 42386, Oct. 19, 1990; 55 FR 50559, Dec. 7, 1990; 56 FR 33881, July 24, 1991; 57 FR 54721, Nov. 20, 1992; 59 FR 10304, Mar. 4, 1994; 64 FR 46594, Aug. 26, 1999]

§ 69.114 Special access.

(a) Appropriate subelements shall be established for the use of equipment or facilities that are assigned to the Special Access element for purposes of apportioning net investment, or that are equivalent to such equipment or facilities for companies subject to price cap regulation as that term is defined in § 61.3(x) of this chapter.

(b) Charges for all subelements shall be designed to produce total annual revenue that is equal to the projected annual revenue requirement for the Special Access element.

(c) Charges for an individual element shall be assessed upon all interexchange carriers that use the equipment or facilities that are included within such subelement.

(d) Charges for individual subelements shall be designed to reflect cost differences among subelements in a manner that complies with applicable Commission rules or decisions.

[48 FR 10358, Mar. 11, 1983, as amended at 48 FR 43019, Sept. 21, 1983. Redesignated at 54 FR 6293, Feb. 9, 1989, as amended at 55 FR 42386, Oct. 19, 1990; 64 FR 46594, Aug. 26, 1999]

§ 69.115 Special access surcharges.

(a) Pending the development of techniques accurately to measure usage of exchange facilities that are interconnected by users with means of interstate or foreign telecommunications, a surcharge that is expressed in dollars and cents per line termination per month shall be assessed upon users that subscribe to private line services or WATS services that are not exempt from assessment pursuant to paragraph (e) of this section.

(b) Such surcharge shall be computed to reflect a reasonable approximation of the carrier usage charges which, assuming non-premium interconnection, would have been paid for average interstate or foreign usage of common lines, end office facilities, and transport facilities, attributable to each Special Access line termination which is not exempt from assessment pursuant to paragraph (e) of this section.

(c) If the association, carrier or carriers that file the tariff are unable to estimate such average usage for a period ending May 31, 1985, the surcharge for such period shall be twenty-five dollars ($25) per line termination per month. As of June 30, 2000, these rates will remain and be capped at the current levels until June 30, 2005.

(d) A telephone company may propose reasonable and nondiscriminatory end user surcharges, to be filed in its federal access tariffs and to be applied to the use of exchange facilities which are interconected by users with means of interstate or foreign telecommunication which are not provided by the telephone company, and which are not exempt from assessment pursuant to paragraph (e) of this section. Telephone companies which wish to avail themselves of this option must undertake to use reasonable efforts to identify such means of interstate or foreign telecommunication, and to assess end user surcharges in a reasonable and nondiscriminatory manner.

(e) No special access surcharges shall be assessed for any of the following terminations:

(1) The open end termination in a telephone company switch of an FX line, including CCSA and CCSA-equivalent ONALs;

(2) Any termination of an analog channel that is used for radio or television program transmission;

(3) Any termination of a line that is used for telex service;

(4) Any termination of a line that by nature of its operating characteristics could not make use of common lines; and

(5) Any termination of a line that is subject to carrier usage charges pursuant to § 69.5.

(6) Any termination of a line that the customer certifies to the exchange carrier is not connected to a PBX or other device capable of interconnecting a local exchange subscriber line with the private line or WATS access line.

(47 U.S.C. 154 (i) and (j), 201, 202, 203, 205, 218 and 403 and 5 U.S.C. 553)

[48 FR 43019, Sept. 21, 1983, as amended at 49 FR 7829, Mar. 2, 1984; 51 FR 10841, Mar. 31, 1986; 52 FR 8259, Mar. 17, 1987; 65 FR 38701, June 21, 2000]

§ 69.118 Traffic sensitive switched services.

Notwithstanding §§ 69.4(b), 69.106, 69.109, 69.110, 69.111, 69.112, and 69.124, telephone companies subject to the BOC ONA Order, 4 FCC Rcd 1 (1988) shall, and other telephone companies may, establish approved Basic Service Elements as provided in Amendments of part 69 of the Commission's rules relating to the Creation of Access Charge Subelements for Open Network Architecture, Report and Order, 6 FCC Rcd 4524 (1991) and 800 data base subelements, as provided in Provision of Access for 800 Service, 8 FCC Rcd _____, CC Docket 86–10, FCC 93–53 (1993). Moreover, all customers that use basic 800 database service shall be assessed a charge that is expressed in dollars and cents per query. Telephone companies shall take into account revenues from the relevant Basic Service Element or Elements and 800 Database Service Elements in computing rates for the Local Switching, Entrance Facilities, Tandem-Switched Transport, Direct-Trunked Transport, Interconnection Charge, and/or Information elements.

[58 FR 7868, Feb. 10, 1993]

§ 69.119 Basic service element expedited approval process.

The rules for filing comments and reply comments on requests for expedited approval of new basic service elements are those indicated in § 1.45 of the rules, except as specified otherwise.

[56 FR 33881, July 24, 1991]

§ 69.120 Line information database.

(a) A charge that is expressed in dollars and cents per query shall be assessed upon all carriers that access validation information from a local exchange carrier database to recover the costs of:

(1) The transmission facilities between the local exchange carrier's signalling transfer point and the database; and

(2) The signalling transfer point facilities dedicated to the termination of the transmission facilities connecting the database to the exchange carrier's signalling network.

(b) A charge that is expressed in dollars and cents per query shall be assessed upon all carriers that access validation information from a local exchange carrier line information database to recover the costs of the database.

[57 FR 24380, June 9, 1992]

§ 69.121 Connection charges for expanded interconnection.

(a) Appropriate connection charge subelements shall be established for the use of equipment and facilities that are associated with offerings of expanded interconnection for special access and switched transport services, as defined in part 64, subpart N of this chapter. To the extent that the same equipment and facilities are used to provide expanded interconnection for both special access and switched transport, the same connection charge subelements shall be used.

(1) A cross-connect subelement shall be established for charges associated with the cross-connect cable and associated facilities connecting the equipment owned by or dedicated to the use of the interconnector with the telephone company's equipment and facilities used to provide interstate special or switched access services. Charges for the cross-connect subelement shall not be deaveraged within a study area that is used for purposes of jurisdictional separations.

(2) Charges for subelements associated with physical collocation or virtual collocation, other than the subelement described in paragraph (a)(1) of

this section and subelements recovering the cost of the virtual collocation equipment described in § 64.1401(e)(1) of this chapter, may reasonably differ in different central offices, notwithstanding § 69.3(e)(7).

(b) Connection charge subelements shall be computed based upon the costs associated with the equipment and facilities that are included in such subelements, including no more than a just and reasonable portion of the telephone company's overhead costs.

(c) Connection charge subelements shall be assessed upon all interconnectors that use the equipment or facilities that are included in such subelements.

[57 FR 54332, Nov. 18, 1992, as amended at 58 FR 48764, Sept. 17, 1993; 59 FR 38930, Aug. 1, 1994]

§ 69.123 Density pricing zones for special access and switched transport.

(a)(1) Incumbent local exchange carriers not subject to price cap regulation may establish any number of density zones within a study area that is used for purposes of jurisdictional separations, provided that each zone, except the highest-cost zone, accounts for at least 15 percent of that carrier's special access and transport revenues within that study area, calculated pursuant to the methodology set forth in § 69.725.

(2) Such a system of pricing zones shall be designed to reasonably reflect cost-related characteristics, such as the density of total interstate traffic in central offices located in the respective zones.

(3) Non-price cap incumbent local exchange carriers may establish only one set of density pricing zones within each study area, to be used for the pricing of both special and switched access pursuant to paragraphs (c) and (d) of this section.

(b)(1) Incumbent local exchange carriers subject to price cap regulation may establish any number of density zones within a study area that is used for purposes of jurisdictional separations, provided that each zone, except the highest-cost zone, accounts for at least 15 percent of that carrier's trunking basket revenues within that study area, calculated pursuant to the methodology set forth in § 69.725.

(2) Price cap incumbent local exchange carriers may establish only one set of density pricing zones within each study area, to be used for the pricing of all services within the trunking basket for which zone density pricing is permitted.

(3) An access service subelement for which zone density pricing is permitted shall be deemed to be offered in the zone that contains the telephone company location from which the service is provided.

(4) An access service subelement for which zone density pricing is permitted which is provided to a customer between telephone company locations shall be deemed to be offered in the highest priced zone that contains one of the locations between which the service is offered.

(c) Notwithstanding § 69.3(e)(7), in study areas in which a telephone company offers a cross-connect, as described in § 69.121(a)(1), for the transmission of interstate special access traffic, telephone companies may charge rates for special access sub-elements of DS1, DS3, and such other special access services as the Commission may designate, that differ depending on the zone in which the service is offered, provided that the charges for any such service shall not be deaveraged within any such zone.

(1) A special access service subelement shall be deemed to be offered in the zone that contains the telephone company location from which the service is provided.

(2) A special access service subelement provided to a customer between telephone company locations shall be deemed to be offered in the highest priced zone that contains one of the locations between which the service is offered.

(d) Notwithstanding § 69.3(e)(7), in study areas in which a telephone company offers a cross-connect, as described in § 69.121(a)(1), for the transmission of interstate switched traffic, or is using collocated facilities to interconnect with telephone company interstate switched transport services, telephone companies may charge rates for sub-elements of direct-trunked

transport, tandem-switched transport, entrance facilities, and dedicated signaling transport that differ depending on the zone in which the service is offered, provided that the charge for any such service shall not be deaveraged within any such zone.

(1) A switched transport service subelement shall be deemed to be offered in the zone that contains the telephone company location from which the service is provided.

(2) A switched transport service subelement provided to a customer between telephone company locations shall be deemed to be offered in the highest priced zone that contains either of the locations between which the service is offered.

(e)(1) Telephone companies not subject to price cap regulation may charge a rate for each service in the highest priced zone that exceeds the rate for the same service in the lowest priced zone by no more than fifteen percent of the rate for the service in the lowest priced zone during the period from the date that the zones are initially established through the following June 30. The difference between the rates for any such service in the highest priced zone and the lowest priced zone in a study area, measured as a percentage of the rate for the service in the lowest priced zone, may increase by no more than an additional fifteen percentage points in each succeeding year, measured from the rate differential in effect on the last day of the preceding tariff year.

(2) Notwithstanding § 69.3(e)(7), incumbent local exchange carriers subject to price cap regulation may charge different rates for services in different zones pursuant to § 61.47(f) of this chapter, provided that the charges for any such service are not deaveraged within any such zone.

(f)(1) An incumbent local exchange carrier that establishes density pricing zones under this section must reallocate additional amounts recovered under the interconnection charge prescribed in § 69.124 of this subpart to facilities-based transport rates, to reflect the higher costs of serving lower density areas. Each incumbent local exchange carrier must reallocate costs from the interexchange charge each time it increases the ratio between the prices in its lowest-cost zone and any other zone in that study area.

(2) Any incumbent local exchange carrier that has already deaveraged its rates on January 1, 1998 must reallocate an amount equivalent to that described in paragraph (f)(1) of this section from the interconnection charge prescribed in § 69.124 to its transport services.

(3) Price cap local exchange carriers shall reassign to direct-trunked transport and tandem-switched transport categories or subcategories interconnection charge amounts reallocated under paragraph (f)(1) or (f)(2) of this section in a manner that reflects the way density pricing zones are being implemented by the incumbent local exchange carrier.

[57 FR 54333, Nov. 18, 1992, as amended at 58 FR 48764, Sept. 17, 1993; 62 FR 31935, June 11, 1997; 64 FR 51267, Sept. 22, 1999; 69 FR 25336, May 6, 2004]

§ 69.124 Interconnection charge.

(a) Until December 31, 2001, local exchange carriers not subject to price cap regulation shall assess an interconnection charge expressed in dollars and cents per access minute upon all interexchange carriers and upon all other persons using the telephone company switched access network.

(b) If the use made of the local exchange carrier's switched access network includes the local switch, but not local transport, the interconnection charge assessed pursuant to paragraph (a) of this section shall be computed by subtracting entrance facilities, tandem-switched transport, direct-trunked transport, and dedicated signalling transport revenues, as well as any interconnection charge revenues that the local exchange carrier anticipates will be reassigned to other, facilities-based rate elements in the future, from the part 69 transport revenue requirement, and dividing by the total interstate local switching minutes.

(c) If the use made of the local exchange carrier's switched access network includes local transport, the interconnection charge to be assessed pursuant to paragraph (a) of this section shall be computed by dividing any interconnection charge revenues that

the local exchange carrier anticipates will be reassigned to other, facilities-based rate elements in the future by the total interstate local transport minutes, and adding thereto the per minute amount calculated pursuant to paragraph (b) of this section.

[62 FR 66030, Dec. 17, 1997, as amended at 66 FR 59732, Nov. 30, 2001]

§ 69.125 Dedicated signalling transport.

(a) Dedicated signalling transport shall consist of two elements, a signalling link charge and a signalling transfer point (STP) port termination charge.

(b)(1) A flat-rated signalling link charge expressed in dollars and cents per unit of capacity shall be assessed upon all interexchange carriers and other persons that use facilities between an interexchange carrier or other person's common channel signalling network and a telephone company signalling transfer point or equivalent facilities offered by a telephone company. Signalling link charges may be distance-sensitive. Distance shall be measured as airline kilometers between the signalling point of interconnection of the interexchange carrier's or other person's common channel signalling network and the telephone company's signalling transfer point.

(2) Signalling link rates will generally be presumed reasonable if they are based on the interoffice charges for equivalent special access services. Telephone companies that have, before February 18, 1993, tariffed a signalling link service for signalling transport between the interexchange carrier's or other person's common channel signalling network and the telephone company's STP are permitted to use the rates that are in place.

(c) A flat-rated STP port termination charge expressed in dollars and cents per port shall be assessed upon all interexchange carriers and other persons that use dedicated signalling transport.

[57 FR 54721, Nov. 20, 1992, as amended at 58 FR 41191, Aug. 3, 1993; 58 FR 44950, Aug. 25, 1993; 62 FR 31935, June 11, 1997]

§ 69.128 Billing name and address.

Appropriate subelements shall be established for the use of equipment or facilities that are associated with offerings of billing name and address.

[58 FR 36145, July 6, 1993]

§ 69.129 Signalling for tandem switching.

A charge that is expressed in dollars and cents shall be assessed upon the purchasing entity by a local telephone company for provision of signalling for tandem switching.

[59 FR 32930, June 27, 1994]

§ 69.130 Line port costs in excess of basic analog service.

To the extent that the costs of ISDN line ports, and line ports associated with other services, exceed the costs of a line port used for basic, analog service, non-price cap local exchange carriers may recover the difference through a separate monthly end-user charge, provided that no portion of such excess cost may be recovered through other common line access charges, or through Interstate Common Line Support.

[66 FR 59732, Nov. 30, 2001]

§ 69.131 Universal service end user charges.

To the extent the company makes contributions to the Universal Service Support Mechanisms pursuant to §§ 54.706 and 54.709 of this chapter and the non-price cap local exchange carrier seeks to recover some or all of the amount of such contribution, the non-price cap local exchange carrier shall recover those contributions through a charge to end users other than Lifeline users. The charge to recover these contributions is not part of any other element established pursuant to part 69. Such a charge may be assessed on a per-line basis or as a percentage of interstate retail revenues, and at the option of the local exchange carrier it may be combined for billing purposes with other end user retail rate elements. A non-price cap local exchange carrier opting to assess the Universal Service end-user rate element on a per-line basis may apply that charge using

the ''equivalency'' relationships established for the multi-line business PICC for Primary Rate ISDN service, as per § 69.153(d), and for Centrex lines, as per § 69.153(e).

[66 FR 59732, Nov. 30, 2001]

Subpart C—Computation of Charges for Price Cap Local Exchange Carriers

SOURCE: 62 FR 31935, June 11, 1997, unless otherwise noted.

§ 69.151 Applicability.

This subpart shall apply only to telephone companies subject to the price cap regulations set forth in part 61 of this chapter.

§ 69.152 End user common line for price cap local exchange carriers.

(a) A charge that is expressed in dollars and cents per line per month shall be assessed upon end users that subscribe to local exchange telephone service or Centrex service to the extent they do not pay carrier common line charges. A charge that is expressed in dollars and cents per line per month shall be assessed upon providers of public telephones. Such charge shall be assessed for each line between the premises of an end user, or public telephone location, and a Class 5 office that is or may be used for local exchange service transmissions.

(b) [Reserved]

(c) The charge for each subscriber line associated with a public telephone shall be equal to the monthly charge computed in accordance with paragraph (k) of this section.

(d)(1) Beginning July 1, 2000, in a study area that does not have deaveraged End User Common Line Charges, the maximum monthly charge for each primary residential or single-line business local exchange service subscriber line shall be the lesser of:

(i) The Average Price Cap CMT Revenue per Line month as defined in § 61.3(d) of this chapter; or

(ii) The following:

(A) On July 1, 2000, $4.35.

(B) On July 1, 2001, $5.00.

(C) On July 1, 2002, $6.00.

(D) On July 1, 2003, $6.50.

(2) In the event that GDP-PI exceeds 6.5% or is less than 0%, the maximum monthly charge in paragraph (d)(1)(ii) of this section and the cap will be adjusted pursuant to § 61.45(b)(1)(iii) of this chapter.

(e)(1) Beginning July 1, 2000, in a study area that does not have deaveraged End User Common Line Charges, the maximum monthly charge for each non-primary residential local exchange service subscriber line shall be the lesser of:

(i) $7.00; or

(ii) The greater of:

(A) The rate as of June 30, 2000 less reductions needed to ensure over recovery of CMT Revenues does not occur; or

(B) The Average Price Cap CMT Revenue per Line month as defined in § 61.3(d) of this chapter.

(2) In the event that GDP-PI is greater than 6.5% or is less than 0%, the maximum monthly charge in paragraph (e)(1)(i) of this section and the cap will be adjusted pursuant to § 61.45(b)(1)(iii) of this chapter.

(3) Where the local exchange carrier provides a residential line to another carrier so that the other carrier may resell that residential line to a residence that already receives a primary residential line, the local exchange carrier may collect the non-primary residential charge described in paragraph (e) of this section from the other carrier.

(f) The charge for each primary residential local exchange service subscriber line shall be the same as the charge for each single-line business local exchange service subscriber line.

(g) A line shall be deemed to be a residential subscriber line if the subscriber pays a rate for such line that is described as a residential rate in the local exchange service tariff.

(h) Effective July 1, 1999, only one of the residential subscriber lines a price cap local exchange carrier provides to a location shall be deemed to be a primary residential line.

(1) Effective July 1, 1999, for purposes of § 69.152(h) of this chapter, ''residential subscriber line'' includes residential lines that a price cap local exchange carrier provides to a competitive local exchange carrier that resells the line and on which the price cap

local exchange carrier may assess access charges.

(2) Effective July 1, 1999, if a customer subscribes to residential lines from a price cap local exchange carrier and at least one reseller of the price cap local exchange carrier's lines, the line sold by the price cap local exchange carrier shall be the primary line, except that if a resold price cap LEC line is already the primary line, the resold line will remain the primary line should a price cap local exchange carrier subsequently sell an additional line to that residence.

(i) A line shall be deemed to be a single-line business subscriber line if the subscriber pays a rate that is not described as a residential rate in the local exchange service tariff and does not obtain more than one such line from a particular telephone company.

(j) No charge shall be assessed for any WATS access line.

(k)(1) Beginning on July 1, 2000, for any study area that does not have deaveraged End User Common Line charges and in the absence of voluntary reductions, the maximum monthly End User Common Line Charge for multi-line business lines will be the lesser of:

(i) $9.20; or

(ii) The greater of:

(A) The rate as of June 30, 2000, less reductions needed to ensure over recovery of CMT Revenues does not occur; or

(B) The Average Price Cap CMT Revenue per Line month as defined in § 61.3(d) of this chapter.

NOTE TO PARAGRAPH (k)(1): Except when the local exchange carrier reduces the rate through voluntary reductions, the multi-line business End User Common Line charge will be frozen until the study area's multi-line business PICC and CCL charge are eliminated.

(2) In the event that GDP-PI is greater than 6.5% or is less than 0%, the maximum monthly charge in paragraph (k)(1)(i) of this section and the cap will be adjusted pursuant to § 61.45(b)(1)(iii) of this chapter.

(l)(1) Beginning January 1, 1998, local exchange carrier shall assess no more than one End User Common Line charge as calculated under the applicable method under paragraph (e) of this section for Basic Rate Interface integrated services digital network (ISDN) service.

(2) Local exchange carriers shall assess no more than five End User Common Line charges as calculated under paragraph (k) of this section for Primary Rate Interface ISDN service.

(m) In the event the local exchange carrier charges less than the maximum End User Common Line charge for any subscriber lines, the local exchange carrier may not recover the difference between the amount collected and the maximum from carrier common line charges or PICCs.

(n)–(p) [Reserved]

(q) *End User Common Line Charge De-Averaging*. Beginning on July 1, 2000, local exchange carriers may geographically deaverage End User Common Line charges subject to the following conditions:

(1) In order for a price cap local exchange carrier to be allowed to de-average End User Common Line charges within a study area, the price cap local exchange carrier must have state Commission approved geographically deaveraged rates for UNE loops within that study area. Except where a LEC geographically deaverages through voluntary reductions, before a price cap local exchange carrier may geographically deaverage its End User Common Line rates, its Originating and Terminating CCL and Multi-line Business PICC rates in that study area must equal $0.00.

(2) All geographic deaveraging of End User Common Line charges by customer class within a study area must be according to the state commission-approved UNE loop zone. Solely for the purposes of determining interstate subscriber line charges and the interstate access universal service support described in §§ 54.806 and 54.807 of this chapter, a price cap local exchange carrier may not have more than four geographic End User Common Line Charge/Universal Service zones absent a review by the Commission. Where a price cap local exchange carrier has more than four state-created UNE zones and the Commission has not approved use of additional zones, the price cap local exchange carrier will determine, at its discretion, which state-created UNE zones to consolidate

so that it has no more than four zones for the purpose of determining interstate subscriber line charges and interstate access universal service support.

(3) Within a given zone, Multi-line Business End User Common Line rates cannot fall below Primary Residential and Single-Line Business or Non-Primary Residential End User Common Line charges. Non-Primary End User Common Line charges cannot fall below Primary Residential and Single-Line Business charges.

(4) For any given class of customer in any given zone, the Zone deaveraged End User Common Line Charge in that zone must be greater than or equal to the Zone deaveraged End User Common Line charge in the zone with the next lower Zone Average Revenue Per Line.

(5) The sum of all revenues per month that would be generated from all deaveraged End User Common Line charges in all zones within a study area plus Interstate Access Universal Service Support per Line month (as defined in § 54.807 of this chapter) for the applicable customer classes and zones receiving such support multiplied by corresponding base period lines, divided by the number of base period lines in that study area cannot exceed Average Price Cap CMT Revenue per Line month as defined in § 61.3(d) of this chapter for that study area. In addition, the sum of revenues per month that would be generated from all deaveraged End User Common Line charges in all End User Common Line charge deaveraging zones within a study area plus revenues per month from all End User Common Line charge, multi-line business PICC and CCL charges from study areas within that study area that have not geographically deaveraged End User Common Line charges plus the sum of all Interstate Access Universal Service Support per Line month (as defined in § 54.807 of this chapter) for the applicable customer classes and zones receiving such support, multiplied by the corresponding base period lines for the applicable customer classes and zones within the study area, divided by the number of total base period lines in the study area cannot exceed Average Price Cap CMT Revenue per Line month as defined in § 61.3(d) of this chapter for the study area.

(6) *Maximum charge*. The maximum zone deaveraged End User Common Line Charge that may be charged in any zone is the applicable cap specified in § 69.152(d)(1), § 69.152(e)(1)(i) or § 69.152 (k)(1)(i) Zone Average Revenue Per Line is the Average Price Cap CMT Revenue per Line month allocated to a particular state-defined zone used for deaveraging of UNE loop prices. The zone average revenue per line is computed pursuant to § 61.3 (zz) of this chapter.

(7) *Minimum charge*. Except where a local exchange carrier chooses to lower the deaveraged End User Common Line charge through voluntary reductions, the minimum zone deaveraged End User Common Line charge in any zone in a study area is at least the Minimum End User Common Line charge. Minimum End User Common Line charge is Zone Average Revenue Per Line for the zone with the lowest Zone Average Revenue Per Line in that study area plus an amount per line calculated to recover the difference between Interstate Access Universal Service Support Per Line (as defined in § 54.807 of this chapter) multiplied by base period lines for the applicable customer class and zones receiving such support and Study Area Above Benchmark Revenues, first from Zone 1 until the End User Common Line charges in Zone 1 equal the End User Common Line charges in Zone 2, and then from lines in Zones 1 and 2 equally until the End User Common Line charges in those Zones reach Zone 3 (with all End User Common Line charges subject to the applicable residential and multi-line business lines nominal caps).

(i) For the purposes of this part, ''Study Area Above Benchmark Revenues'' is the sum of all Zone Above Benchmark Revenues.

(ii) For the purposes of this part, ''Zone Above Benchmark Revenues'' is calculated as follows:

Zone Above Benchmark Revenues is the sum of Zone Above Benchmark Revenues for Residential and Single-line Business lines and Zone Above Benchmark Revenues for Multi-line Business lines. Zone Above Benchmark Revenues for Residential and Single-

line Business lines is, within each zone, (Zone Average Revenue Per Line minus $7.00) multiplied by all eligible telecommunications carrier Base Period Residential and Single-line Business lines times 12. If negative, the Zone Above Benchmark Revenues for Residential and Single-line Business lines for the zone is zero. Zone Above Benchmark Revenues for Multi-line Business lines is, within each zone,

(Zone Average Revenue Per Line minus $9.20) multiplied by all eligible telecommunications carrier zone Base Period Multi-line Business lines times 12. If negative, the Zone Above Benchmark Revenues for Multi-line Business lines for the zone is zero.

(8) *Voluntary Reductions*. A ''Voluntary Reduction'' is one in which the local exchange carrier reduces prices other than through offset of net increases in End User Common Line charge revenues or Interstate Access Universal Service support received pursuant to § 54.807 of this chapter, or through increases in other zone deaveraged End User Common Line charges.

[65 FR 38701, June 21, 2000; 65 FR 57744, Sept. 26, 2000]

§ 69.153 Presubscribed interexchange carrier charge (PICC).

(a) A charge expressed in dollars and cents per line may be assessed upon the Multi-line business subscriber's presubscribed interexchange carrier to recover revenues totaling Average Price Cap CMT Revenues per Line month times the number of base period lines less revenues recovered through the End User Common Line charge established under § 69.152 and Interstate Access Universal Service Support Per Line (as defined in § 54.807 of this chapter) multiplied by base period lines for the applicable customer class and zones receiving such support, up to a maximum of $4.31 per line per month. In the event the ceilings on the PICC prevent the PICC from recovering all the residual common line/marketing and residual interconnection charge revenues, the PICC shall recover all residual common line/marketing revenues before it recovers residual interconnection charge revenues.

(b) If an end-user customer does not have a presubscribed interexchange carrier, the local exchange carrier may collect the PICC directly from the end user.

(c) [Reserved]

(d) Local exchange carriers shall assess no more than five PICCs as calculated under paragraph (a) of this section for Primary Rate Interface ISDN service.

(e) The maximum monthly PICC for Centrex lines shall be one-ninth of the maximum charge determined under paragraph (a) of this section, except that if a Centrex customer has fewer than nine lines, the maximum monthly PICC for those lines shall be the maximum charge determined under paragraph (a) of this section divided by the customer's number of Centrex lines.

(f) The PICC shall not be applicable to any payphone lines.

(g)–(h) [Reserved]

[65 FR 38703, June 21, 2000; 65 FR 57744, Sept. 26, 2000, as amended at 68 FR 43329, July 22, 2003]

§ 69.154 Per-minute carrier common line charge.

(a) Local exchange carriers may recover a per-minute carrier common line charge from interexchange carriers, collected on originating access minutes and calculated using the weighting method set forth in paragraph (c) of this section. The maximum such charge shall be the lower of:

(1) The per-minute rate using base period demand that would recover the maximum allowable carrier common line revenue as defined in § 61.46(d) of this chapter; or

(2) The sum of the local switching, carrier common line and interconnection charge charges assessed on originating minutes on December 31, 1997, minus the local switching charges assessed on originating minutes.

(b) To the extent that paragraph (a) of this section does not recover from interexchange carriers all permitted carrier common line revenue, the excess may be collected through a per-minute charge on terminating access calculated using the weighting method set forth in paragraph (c) of this section.

(c) For each Carrier Common Line access element tariff, the premium originating Carrier Common Line charge shall be set at a level that recovers revenues allowed under paragraphs (a) and (b) of this section. The non-premium charges shall be equal to .45 multiplied by the premium charges.

[62 FR 31935, June 11, 1997, as amended at 65 FR 38703, June 21, 2000]

§ 69.155 Per-minute residual interconnection charge.

(a) Local exchange carriers may recover a per-minute residual interconnection charge on originating access. The maximum such charge shall be the lower of:

(1) The per-minute rate that would recover the total annual residual interconnection charge revenues permitted less the portion of the residual interconnection charge allowed to be recovered under § 69.153; or

(2) The sum of the local switching, carrier common line and residual interconnection charges assessed on originating minutes on December 31, 1997, minus the local switching charges assessed on originating minutes, less the maximum amount allowed to be recovered under § 69.154(a).

(b) To the extent that paragraph (a) of this section prohibits a local exchange carrier from recovering all of the residual interconnection charge revenues permitted, the residual may be collected through a per-minute charge on terminating access.

(c)(1) No portion of the charge assessed pursuant to paragraphs (a) or (b) of this section that recovers revenues that the local exchange carrier anticipates will be reassigned to other, facilities-based rate elements, including the tandem-switching rate element described in § 69.111(g), the three-part tandem switched transport rate structure described in § 69.111(a)(2), and port and multiplexer charges described in § 69.111(l), shall be assessed upon minutes utilizing the local exchange carrier's local switching facilities, but not the local exchange carrier's transport service.

(2) If a local exchange carrier cannot recover its full residual interconnection charge revenues through the PICC mechanism established in § 69.153, and will consequently cover a portion of its residual interconnection charge revenues through per-minute charges assessed pursuant to paragraphs (a) and (b) of this section, then the local exchange carrier must allocate its residual interconnection charge revenues subject to the exemption established in paragraph (c)(1) of this section between the PICC and the per-minute residual interconnection charge in the same proportion as other residual interconnection charge revenues are allocated between these two recovery mechanisms.

[62 FR 31938, June 11, 1997; 62 FR 40460, July 29, 1997, as amended at 62 FR 56133, Oct. 29, 1997]

§ 69.156 Marketing expenses.

Effective July 1, 2000, the marketing expenses formerly allocated to the common line and traffic sensitive baskets, and the switched services within the trunking basket pursuant to § 32.6610 of this chapter and § 69.403 will now be recovered in the CMT basket created pursuant to § 61.42(d)(1) of this chapter. These marketing expenses will be recovered through the elements outlined in §§ 69.152, 69.153 and 69.154.

[65 FR 38703, June 21, 2000]

§ 69.157 Line port costs in excess of basic, analog service.

To the extent that the costs of ISDN line ports, and line ports associated with other services, exceed the costs of a line port used for basic, analog service, local exchange carriers may recover the difference through a separate monthly end-user charge. As of June 30, 2000, these rates will be capped until June 30, 2005.

[65 FR 38704, June 21, 2000; 65 FR 57744, Sept. 26, 2000]

§ 69.158 Universal service end user charges.

To the extent the company makes contributions to the Universal Service Support Mechanisms pursuant to §§ 54.706 and 54.709 of this chapter and the local exchange carrier seeks to recover some or all of the amount of such contribution, the local exchange carrier shall recover those contributions through a charge to end users other

than Lifeline users. These contributions are not a part of any price cap baskets, and the charge to recover these contributions is not part of any other element established pursuant to part 69. Such a charge may be assessed on a per-line basis or as a percentage of interstate retail revenues, and at the option of the local exchange carrier it may be combined for billing purposes with other end user retail rate elements. A local exchange carrier opting to assess the Universal Service end-user rate element on a per-line basis may apply that charge using the ''equivalency'' relationships established for the multi-line business PICC for Primary Rate ISDN service, as per § 69.153(d), and for Centrex lines, as per § 69.153(e).

[65 FR 38704, June 21, 2000; 65 FR 57744, Sept. 26, 2000]

Subpart D—Apportionment of Net Investment

SOURCE: 52 FR 37312, Oct. 6, 1987, unless otherwise noted.

§ 69.301 General.

(a) For purposes of computing annual revenue requirements for access elements net investment as defined in § 69.2 (z) shall be apportioned among the interexchange category, the billing and collection category and access elements as provided in this subpart. For purposes of this subpart, local transport includes five elements: entrance facilities, direct-trunked transport, tandem-switched transport, dedicated signaling transport, and the interconnection charge. Expenses shall be apportioned as provided in subpart E of this part.

(b) The End User Common Line and Carrier Common Line elements shall be combined for purposes of this subpart and subpart E of this part. Those elements shall be described collectively as the Common Line element. The Common Line element revenue requirement shall be segregated in accordance with subpart F of this part.

[52 FR 37312, Oct. 6, 1987, as amended at 57 FR 54722, Nov. 20, 1992]

§ 69.302 Net investment.

(a) Investment in Accounts 2001, 1220 and Class B Rural Telephone Bank Stock booked in Account 1410 shall be apportioned among the interexchange category, billing and collection category and appropriate access elements as provided in §§ 69.303 through 69.309.

(b) Investment in Accounts 2002, 2003 and to the extent such inclusions are allowed by this Commission, Account 2005 shall be apportioned on the basis of the total investment in Account 2001, Telecommunications Plant in Service.

[52 FR 37312, Oct. 6, 1987, as amended at 54 FR 3456, Jan. 24, 1989; 67 FR 5703, Feb. 6, 2002]

§ 69.303 Information origination/termination equipment (IOT).

Investment in all other IOT shall be apportioned between the Special Access and Common Line elements on the basis of the relative number of equivalent lines in use, as provided herein. Each interstate or foreign Special Access Line, excluding lines designated in § 69.115(e), shall be counted as one or more equivalent lines where channels are of higher than voice bandwidth, and the number of equivalent lines shall equal the number of voice capacity analog or digital channels to which the higher capacity is equivalent. Local exchange subscriber lines shall be multiplied by the interstate Subscriber Plant Factor to determine the number of equivalent local exchange subscriber lines.

[52 FR 37312, Oct. 6, 1987, as amended at 62 FR 31938, June 11, 1997]

§ 69.304 Subscriber line cable and wire facilities.

(a) Investment in local exchange subscriber lines shall be assigned to the Common Line element.

(b) Investment in interstate and foreign private lines and interstate WATS access lines shall be assigned to the Special access element.

[52 FR 37312, Oct. 6, 1987, as amended at 62 FR 31938, June 11, 1997]

§ 69.305 Carrier cable and wire facilities (C&WF).

(a) Carrier C&WF that is not used for ''origination'' or ''termination'' as defined in § 69.2(bb) and § 69.2(cc) shall be assigned to the interexchange category.

(b) Carrier C&WF, other than WATS access lines, not assigned pursuant to paragraph (a), (c), or (e) of this section that is used for interexchange services that use switching facilities for origination and termination that are also used for local exchange telephone service shall be apportioned to the local Transport elements.

(c) Carrier C&WF that is used to provide transmission between the local exchange carrier's signalling transfer point and the database shall be assigned to the Line Information Database sub-element at § 69.120(a).

(d) All Carrier C&WF that is not apportioned pursuant to paragraphs (a), (b), (c), and (e) of this section shall be assigned to the Special Access element.

(e) Carrier C&WF that is used to provide transmission between the local exchange carrier's signalling transfer point and the local switch shall be assigned to the local switching category.

[52 FR 37312, Oct. 6, 1987, as amended at 57 FR 24380, June 9, 1992; 58 FR 30995, May 28, 1993; 62 FR 31938, June 11, 1997]

§ 69.306 Central office equipment (COE).

(a) The Separations Manual categories shall be used for purposes of apportioning investment in such equipment except that any Central office equipment attributable to local transport shall be assigned to the Transport elements.

(b) COE Category 1 (Operator Systems Equipment) shall be apportioned among the interexchange category and the access elements as follows: Category 1 that is used for intercept services shall be assigned to the Local Switching element. Category 1 that is used for directory assistance shall be assigned to the Information element. Category 1 other than service observation boards that is not assigned to the Information element and is not used for intercept services shall be assigned to the interexchange category. Service observation boards shall be apportioned among the interexchange category, and the Information and Transport access elements based on the remaining combined investment in COE Category 1, Category 2 and Category 3.

(c) COE Category 2 (Tandem Switching Equipment) that is deemed to be exchange equipment for purposes of the Modification of Final Judgment in *United States* v. *Western Electric Co.* shall be assigned to the tandem switching charge subelement and the interconnection charge element. COE Category 2 which is associated with the signal transfer point function shall be assigned to the local switching category. COE Category 2 which is used to provide transmission facilities between the local exchange carrier's signalling transfer point and the database shall be assigned to the Line Information Database subelement at § 69.120(a). All other COE Category 2 shall be assigned to the interexchange category.

(d) COE Category 3 (Local Switching Equipment) shall be assigned to the Local Switching element except as provided in paragraph (a) of this section; and that,

(1) For telephone companies subject to price cap regulation set forth in part 61 of this chapter, line-side port costs shall be assigned to the Common Line rate element; and

(2) Until June 30, 2012, for non-price cap local exchange carriers, line-side port costs shall be assigned to the Common Line rate element. Such amount shall be determined after any local switching support has been removed from the interstate Local Switching revenue requirement. Non-price cap local exchange carriers may use thirty percent of the interstate Local Switching revenue requirement, minus any local switching support, as a proxy for allocating line port costs to the Common Line category.

(3) Beginning July 1, 2012, a non-price cap local exchange carrier shall assign line-side port costs to the Common Line rate element equal to the amount of line-side port costs it shifted in its 2011 projected Interstate Switched Access Revenue Requirement.

(e) COE Category 4 (Circuit Equipment) shall be apportioned among the

interexchange category and the Common Line, Transport, and Special Access elements. COE Category 4 shall be apportioned in the same proportions as the associated Cable and Wireless Facilities; except that any DS1/voice-grade multiplexer investment associated with analog local switches and assigned to the local transport category by this section shall be reallocated to the local switching category.

[52 FR 37312, Oct. 6, 1987, as amended at 57 FR 54722, Nov. 20, 1992; 58 FR 30995, May 28, 1993; 62 FR 31938, June 11, 1997; 66 FR 59732, Nov. 30, 2001; 78 FR 26269, May 6, 2013]

§ 69.307 General support facilities.

(a) General purpose computer investment used in the provision of the Line Information Database sub-element at § 69.120(b) shall be assigned to that sub-element.

(b) General purpose computer investment used in the provision of the billing name and address element at § 69.128 shall be assigned to that element.

(c)(1) Until June 30, 2002, for all local exchange carriers not subject to price cap regulation and for other carriers that acquire all of the billing and collection services that they provide to interexchange carriers from unregulated affiliates through affiliate transactions, from unaffiliated third parties, or from both of these sources, all other General Support Facilities investments shall be apportioned among the interexchange category, the billing and collection category, and Common Line, Local Switching, Information, Transport, and Special Access elements on the basis of Central Office Equipment, Information Origination/Termination Equipment, and Cable and Wire Facilities, combined.

(2) Beginning July 1, 2002, for all local exchange carriers that acquire all of the billing and collection services that they provide to interexchange carriers from unregulated affiliates through affiliate transactions, from unaffiliated third parties, or from both of these sources, all other General Support Facilities investments shall be apportioned among the interexchange category, the billing and collection category, and Common Line, Local Switching, Information, Transport, and Special Access elements on the basis of Central Office Equipment, Information Origination/Termination Equipment, and Cable and Wire Facilities, combined.

(d) For local exchange carriers subject to price cap regulation and not covered by Section 69.307(c), a portion of General purpose computer investment (Account 2124), investment in Land (Account 2111), Buildings (Account 2121), and Office equipment (Account 2123) shall be apportioned to the billing and collection category on the basis of the Big Three Expense Factors allocator, defined in Section 69.2 of this Part, modified to exclude expenses that are apportioned on the basis of allocators that include General Support Facilities investment. The remaining portion of investment in these four accounts together with all other General Support Facilities investments shall be apportioned among the interexchange category, the billing and collection category, and Common Line, Local Switching, Information, Transport, and Special Access Elements on the basis of Central Office Equipment, Information Origination/Termination Equipment, and Cable and Wire Facilities, combined.

(e) Beginning July 1, 2002, for non-price cap local exchange carriers not covered by § 69.307(c)(2), a portion of General purpose computer investment shall be apportioned to the billing and collection category on the basis of the Big Three Expense Factors allocator, defined in § 69.2, modified to exclude expenses that are apportioned on the basis of allocators that include General Support Facilities investment. The remaining General Support Facilities investments shall be apportioned among the interexchange category, the billing and collection category, and Common Line, Local Switching, Information, Transport, and Special Access Elements on the basis of Central Office Equipment, Information Origination/Termination Equipment, and Cable and Wire Facilities, combined.

[58 FR 30995, May 28, 1993, as amended at 58 FR 36145, July 6, 1993; 62 FR 31939, June 11, 1997; 62 FR 40464, July 29, 1997; 62 FR 65622, Dec. 15, 1997; 66 FR 59732, Nov. 30, 2001]

§ 69.308 [Reserved]

§ 69.309 Other investment.

Investment that is not apportioned pursuant to §§ 69.302 through 69.307 shall be apportioned among the interexchange category, the billing and collection category and access elements in the same proportions as the combined investment that is apportioned pursuant to §§ 69.303 through 69.307.

[62 FR 31939, June 11, 1997]

§ 69.310 Capital leases.

Capital Leases in Account 2680 shall be directly assigned to the appropriate interexchange category or access elements consistent with the treatment prescribed for similar plant costs or shall be apportioned in the same manner as Account 2001.

Subpart E—Apportionment of Expenses

SOURCE: 52 FR 37313, Oct. 6, 1987, unless otherwise noted.

§ 69.401 Direct expenses.

(a) Plant Specific Operations Expenses in Accounts 6110 and 6120 shall be apportioned among the interexchange category, the billing and collection category and appropriate access elements on the following basis:

(1) Account 6110—Apportion on the basis of other investment apportioned pursuant to § 69.309.

(2) Account 6120—Apportion on the basis of General and Support Facilities investment pursuant to § 69.307.

(b) Plant Specific Operations Expenses in Accounts 6210, 6220, and 6230, shall be apportioned among the interexchange category and access elements on the basis of the apportionment of the investment in Accounts 2210, 2220, and 2230, respectively; provided that any expenses associated with DS1/voice-grade multiplexers, to the extent that they are not associated with an analog tandem switch, assigned to the local transport category by this paragraph shall be reallocated to the local switching category; provided further that any expenses associated with common channel signalling included in Account 6210 shall be assigned to the local transport category.

(c) Plant Specific Operations Expenses in Accounts 6310 and 6410 shall be assigned to the appropriate investment category and shall be apportioned among the interexchange category and access elements in the same proportions as the total associated investment.

(d) Plant Non Specific Operations Expenses in Accounts 6510 and 6530 shall be apportioned among the interchange category, the billing and collection category, and access elements in the same proportions as the combined investment in COE, IOT, and C&WF apportioned to each element and category.

(e) Plant Non Specific Operations Expenses in Account 6540 shall be assigned to the interexchange category.

(f) Plant Non Specific Operations Expenses in Account 6560 shall be apportioned among the interexchange category, the billing and collection category, and access elements in the same proportion as the associated investment.

(g) Amortization of embedded customer premises wiring investment shall be deemed to be associated with § 69.303(b) IOT investment for purposes of the apportionment described in paragraph (c) of this section.

[52 FR 37313, Oct. 6, 1987, as amended at 62 FR 31939, June 11, 1997]

§ 69.402 Operating taxes (Account 7200).

(a) Federal income taxes, state and local income taxes, and state and local gross receipts or gross earnings taxes that are collected in lieu of a corporate income tax shall be apportioned among the interexchange category, the billing and collection category and all access elements based on the approximate net taxable income on which the tax is levied (positive or negative) applicable to each element and category.

(b) All other operating taxes shall be apportioned among the interexchange category, the billing and collection category and all access elements in the same manner as the investment apportioned to each element and category pursuant to § 69.309 Other Investment.

§ 69.403 Marketing expense (Account 6610).

Marketing expense shall be apportioned among the interexchange category and all access elements in the same proportions as the combined investment that is apportioned pursuant to § 69.309.

§ 69.404 Telephone operator services expenses in Account 6620.

Telephone Operator Services expenses shall be apportioned among the interexchange category, and the Local Switching and Information elements based on the relative number of weighted standard work seconds. For those companies who contract with another company for the provision of these services, the expenses incurred shall be directly assigned among the interexchange category and the Local Switching and Information elements on the basis of the bill rendered for the services provided.

§ 69.405 Published directory expenses in Account 6620.

Published Directory expenses shall be assigned to the Information element.

§ 69.406 Local business office expenses in Account 6620.

(a) Local business office expenses shall be assigned as follows:

(1) End user service order processing expenses attributable to presubscription shall be apportioned among the Common Line, Switching, and Transport elements in the same proportion as the investment apportioned to those elements pursuant to § 69.309.

(2) End user service order processing, payment and collection, and billing inquiry expenses attributable to the company's own interstate private line and special access service shall be assigned to the Special Access element.

(3) End user service order processing, payment and collection, and billing inquiry expenses attributable to interstate private line service offered by an interexhange carrier shall be assigned to the billing and collection category.

(4) End user service order processing, payment and collection, and billing inquiry expenses attributable to the company's own interstate message toll service shall be assigned to the interexchange category. End user service order processing, payment and collection, and billing inquiry expenses attributable to interstate message toll service offered by an interexchange carrier shall be assigned to the billing and collection category. End user payment and collection and billing inquiry expenses attributable to End User Common Line access billing shall be assigned to the Common Line element.

(5) End user service order processing, payment and collection, and billing inquiry expenses attributable to TWX service shall be assigned to the Special Access element.

(6) Interexchange carrier service order processing, payment and collection, and billing inquiry expenses attributable to private lines and special access shall be assigned to the Special Access element.

(7) Interexchange carrier service order processing, payment and collection, and billing inquiry expenses attributable to interstate switched access and message toll, shall be apportioned among the Common Line, Local Switching and Transport elements in the same proportion as the investment apportioned to those elements pursuant to § 69.309.

(8) Interexchange carrier service order processing, payment and collection, and billing inquiry expenses attributable to billing and collection service shall be assigned to the billing and collection category.

[52 FR 37313, Oct. 6, 1987, as amended at 62 FR 31939, June 11, 1997]

§ 69.407 Revenue accounting expenses in Account 6620.

(a) Revenue accounting expenses that are attributable to End User Common Line access billings shall be assigned to the Common Line element.

(b) Revenue Accounting Expenses that are attributable to carrier's carrier access billing and collecting expense shall be apportioned among all carrier's carrier access elements except the Common Line element. Such expenses shall be apportioned in the same proportion as the combined investment in COE, C&WF and IOT apportioned to those elements.

(c) Revenue Accounting Expenses allocated to the interstate jurisdiction that are attributable to the provision of billing name and address information shall be assigned to the Billing Name and Address element.

(d) All other Revenue Accounting Expenses shall be assigned to the billing and collection category.

[52 FR 37313, Oct. 6, 1987, as amended at 58 FR 65671, Dec. 16, 1993]

§ 69.408 All other customer services expenses in Account 6620.

All other customer services expenses shall be apportioned among the Interexchange category, the billing and collection category and all access elements based on the combined expenses in §§ 69.404 through 69.407.

[52 FR 37313, Oct. 6, 1987, as amended at 54 FR 3456, Jan. 24, 1989]

§ 69.409 Corporate operations expenses (included in Account 6720).

All corporate operations expenses shall be apportioned among the interexchange category, the billing and collection category and all access elements in accordance with the Big 3 Expense Factor as defined in § 69.2(f).

§ 69.411 Other expenses.

Except as provided in §§ 69.412, 69.413, and 69.414, expenses that are not apportioned pursuant to §§ 69.401 through 69.409 shall be apportioned among the interexchange category and all access elements in the same manner as § 69.309 Other investment.

[62 FR 31639, June 11, 1997]

§ 69.412 Non participating company payments/receipts.

For telephone companies that are not association Common Line tariff participants, the payment or receipt of funds described in § 69.612(a) and (b) shall be apportioned, respectively, as an addition to or a deduction from their common line revenue requirement.

§ 69.413 High cost loop support universal service fund expenses.

Beginning April 1, 1989, expenses allocated to the interstate jurisdiction pursuant to §§ 54.1310 and 36.641 of this chapter shall be assigned to the Universal Service Fund Element.

[79 FR 39193, July 9, 2014]

§ 69.414 Lifeline assistance expenses.

Expenses allocated to the interstate jurisdiction pursuant to § 36.741 shall be assigned to the Carrier Common Line element until March 31, 1989. Beginning April 1, 1989, such expenses shall be assigned to the Lifeline Assistance element.

§ 69.415 Reallocation of certain transport expenses.

(a) Beginning January 1, 2002, non-price cap local exchange carriers shall reallocate a portion of the costs otherwise assigned to the transport category to the common line, local switching, information, and special access elements.

(b) Until June 30, 2012, the amount to be reallocated is limited to the total revenues recovered through the interconnection charge assessed pursuant to § 69.124 for the 12–month period ending June 30, 2001.

(c) Until June 30, 2012, the reallocation of the amount in paragraph (b) of this section shall be based on each access element's projected revenue requirement divided by the total revenue requirement of all the access elements, provided that:

(1) Local switching support shall not be included in the local switching category's projected revenue requirement, or in the total projected revenue requirement;

(2) A non-price cap local exchange carrier's universal service contribution shall not be included in the numerator or the denominator of the allocation formula;

(3) The amount determined in paragraph (b) of this section shall be excluded from the transport revenue requirement and from the total projected revenue requirement for purposes of the allocation calculations; and

(4) The common line revenue requirement shall include Interstate Common Line Support as provided in § 54.901 of this chapter.

(d) Beginning July 1, 2012, the amount of the Transport Interconnection Charges to be reallocated to each category shall be equal to the amount

of Transport Interconnection Charge costs the non-price cap local exchange carrier was projected to shift to each category in projecting its 2011 Interstate Switched Access Revenue Requirement.

[66 FR 59733, Nov. 30, 2001, as amended at 78 FR 5750, Jan. 28, 2013; 78 FR 26269, May 6, 2013]

Subpart F—Segregation of Common Line Element Revenue Requirement

§ 69.501 General.

(a) [Reserved]

(b) Until December 31, 2001, any portion of the Common Line element annual revenue requirement that is attributable to CPE investment or expense or surrogate CPE investment or expense shall be assigned to the Carrier Common Line element or elements.

(c) Until December 31, 2001, any portion of the Common Line element annual revenue requirement that is attributable to customer premises wiring included in IOT investment or expense shall be assigned to the Carrier Common Line element or elements.

(d) [Reserved]

(e) Until December 31, 2001, any portion of the Common Line element revenue requirement that is not assigned to Carrier Common Line elements pursuant to paragraphs (b) and (c) of this section shall be apportioned between End User Common Line and Carrier Common Line pursuant to § 69.502. Such portion of the Common Line element annual revenue requirement shall be described as the base factor portion for purposes of this subpart.

(f) Beginning January 1, 2002, the Common Line element revenue requirement shall be apportioned between End User Common Line and Carrier Common Line pursuant to § 69.502. The Common Line element annual revenue requirement shall be described as the base factor portion for purposes of this subpart.

[48 FR 10358, Mar. 11, 1983, as amended at 50 FR 18262, Apr. 30, 1985; 52 FR 21542, June 8, 1987; 52 FR 37314, Oct. 6, 1987; 61 FR 65364, Dec. 12, 1996; 62 FR 31939, June 11, 1997; 66 FR 59733, Nov. 30, 2001]

§ 69.502 Base factor allocation.

Projected revenues from the following shall be deducted from the base factor portion to determine the amount that is assigned to the Carrier Common Line element:

(a) End User Common Line charges, less any marketing expense revenues recovered through end user common line charges pursuant to § 69.156;

(b) Special Access surcharges; and

(c) Beginning July 1, 2002, the portion of per-line support that carriers receive pursuant to § 54.901 of this chapter; and

(d) Line port costs in excess of basic analog service pursuant to § 69.130.

[62 FR 31939, June 11, 1997, as amended at 62 FR 40464, July 29, 1997; 66 FR 59733, Nov. 30, 2001; 78 FR 5750, Jan. 28, 2013]

Subpart G—Exchange Carrier Association

§ 69.601 Exchange carrier association.

(a) An association shall be established in order to prepare and file access charge tariffs on behalf of all telephone companies that do not file separate tariffs or concur in a joint access tariff of another telephone company for all access elements.

(b) All telephone companies that participate in the distribution of Carrier Common Line revenue requirement, pay long term support to association Common Line tariff participants, or receive payments from the transitional support fund administered by the association shall be deemed to be members of the association.

(c) All data submissions to the association required by this title shall be accompanied by the following certification statement signed by the officer or employee responsible for the overall preparation for the data submission:

CERTIFICATION

I am (title of certifying officer or employee). I hereby certify that I have overall responsibility for the preparation of all data in the attached data submission for (name of carrier) and that I am authorized to execute this certification. Based on information known to me or provided to me by employees responsible for the preparation of the data in this submission, I hereby certify that the data have been examined and reviewed and are complete, accurate, and consistent with

the rules of the Federal Communications Commission.

Date: _____

Name: _____

Title: _____

(Persons making willful false statements in this data submission can be punished by fine or imprisonment under the provisions of the U.S. Code, Title 18, Section 1001).

[48 FR 10358, Mar. 11, 1983, as amended at 52 FR 21542, June 8, 1987; 60 FR 19530, Apr. 19, 1995]

§ 69.602 Board of directors.

(a) For purposes of this section, the association membership shall be divided into three subsets:

(1) The first subset shall consist of the telephone companies owned and operated by the seven Regional Bell Holding Companies;

(2) The second subset shall consist of all other telephone companies with annual operating revenues in excess of forty million dollars;

(3) The third subset shall consist of all other telephone companies. All commonly controlled companies shall be deemed to be one company for purposes of this section.

(b) There shall be fifteen directors of the association.

(c) Two directors shall represent the first subset, two directors shall represent the second subset, six directors shall represent the third subset, and five directors shall represent all three subsets.

(d) No director who represents all three subsets shall be a current or former officer or employee of the association or of any association member, or have a business relationship or other interest that could interfere with his or her exercise of independent judgment.

(e) Each subset of the association membership shall select the directors who will represent it through elections in which each member of the subset shall be entitled to one vote for each director position within that subset.

(f) The association membership shall select the directors who will represent all three subsets through an election in which each member of the association shall be entitled to one vote for each director position. No director representing all three subsets may serve for more than six consecutive calendar years without standing for an election in which that director is opposed by at least one other candidate meeting the qualifications in paragraph (d) of this section.

(g) At least one director representing all three subsets shall be a member of each committee of association directors.

(h) For each access element or group of access elements for which voluntary pooling is permitted, there shall be a committee that is responsible for the preparation of charges for the associated access elements that comply with all applicable sections in this part.

[60 FR 19530, Apr. 19, 1995, as amended at 68 FR 46502, Aug. 6, 2003]

§ 69.603 Association functions.

(a) The Association shall not engage in any activity that is not related to the preparation of access charge tariffs or the collection and distribution of access charge revenues or the operation of a billing and collection pool on an untariffed basis unless such activity is expressly authorized by order of the Commission.

(b) Participation in Commission or court proceedings relating to access charge tariffs, the billing and collection of access charges, the distribution of access charge revenues, or the operation of a billing and collection pool on an untariffed basis shall be deemed to be authorized association activities.

(c)–(e) [Reserved]

(f) The association shall also prepare and file an access charge tariff containing terms and conditions for access service and form for the filing of rate schedules by telephone companies that choose to reference these terms and conditions while filing their own access rates.

(g) The association shall divide the expenses of its operations into two categories. The first category (''Category I Expenses'') shall consist of those expenses that are associated with the preparation, defense, and modification of association tariffs, those expenses that are associated with the administration of pooled receipts and distributions of exchange carrier revenues resulting from association tariffs, those

expenses that are associated with association functions pursuant to § 69.603 (c)–(g), and those expenses that pertain to Commission proceedings involving subpart G of part 69 of the Commission's rules. The second category (''Category II Expenses'') shall consist of all other association expenses. Category I Expenses shall be sub-divided into three components in proportion to the revenues associated with each component. The first component (''Category I.A Expenses'') shall be in proportion to the Universal Service Fund and Lifeline Assistance revenues. The second component (''Category I.B Expenses'') shall be in proportion to the sum of the association End User Common Line revenues, the association Carrier Common Line revenues, the association Special Access Surcharge revenues, the Long Term Support payments and the Transitional Support payments. Beginning July 1, 2002, Interstate Common Line Support revenues shall be included in the allocation base for Category I.B expenses. The third component (''Category I.C Expenses'') shall be in proportion to the revenues from all other association interstate access charges.

(h)(1) The revenue requirement for association tariffs filed pursuant to § 69.4(c) shall not include any association expenses other than Category I.A Expenses.

(2) The revenue requirement for association tariffs filed pursuant to § 69.4 (a) and (b)(2) shall not include any Association expenses other than Category I.B Expenses.

(3) The revenue requirement for association tariffs filed pursuant to § 69.4(b) (1) and (3)–(7) shall not include any association expenses other than Category I.C Expenses.

(4) No distribution to an exchange carrier of Universal Service Fund and Lifeline Assistance revenues shall include adjustments for association expenses other than Category I.A Expenses.

(5) No distribution to an exchange carrier of revenues from association End User Common Line or Carrier Common Line charges, Special Access Surcharges or Long Term Support or Transitional Support payments shall include adjustments for association expenses other than Category I.B Expenses. Beginning July 1, 2002, Interstate Common Line Support shall be subject to this provision.

(6) No distribution to an exchange carrier of revenues from association interstate access charges other than End User Common Line and Carrier Common Line charges and Special Access Surcharges shall include adjustments for association expenses other than Category I.C Expenses.

(7) The association shall separately identify all Category I.A, I.B and I.C expenses in cost support materials filed with each annual association access tariff filing.

[54 FR 8197, Feb. 27, 1989, as amended at 54 FR 8199, Feb. 27, 1989; 62 FR 41306, Aug. 1, 1997; 63 FR 70578, Dec. 21, 1998; 66 FR 59733, Nov. 30, 2001]

§ 69.604 Billing and collection of access charges.

(a) Telephone companies shall bill and collect all access charges except those charges specified in §§ 69.116 and 69.117.

(b) All access charges shall be billed monthly.

[51 FR 9012, Mar. 17, 1986, as amended at 52 FR 21543, June 8, 1987]

§ 69.605 Reporting and distribution of pool access revenues.

(a) Access revenues and cost data shall be reported by participants in association tariffs to the association for computation of monthly pool revenues distributions in accordance with this subpart.

(b) Association expenses incurred during the month that are allowable access charge expenses shall be reimbursed before any other funds are disbursed.

(c) Except as provided in paragraph (b) of this section, payments to average schedule companies that are computed in accordance with § 69.606 shall be disbursed before any other funds are disbursed. For purposes of this part, a telephone company that was participating in average schedule settlements on December 1, 1982, shall be deemed to be an average schedule company except that any company that does not join in

association tariffs for all access elements shall not be deemed to be an average schedule company.

(d) The residue shall be disbursed to telephone companies that are not average schedule companies in accordance with §§ 69.607 through 69.610.

(e) The association shall submit a report on or before February 1 of each calendar year describing the association's cost study review process for the preceding calendar year as well as the results of that process. For any revisions to cost study results made or recommended by the association that would change the respective carrier's calculated annual common line or traffic sensitive revenue requirement by ten percent or more, the report shall include the following information:

(1) The name of the carrier;

(2) A detailed description of the revisions;

(3) The amount of the revisions;

(4) The impact of the revisions on the carrier's calculated common line and traffic sensitive revenue requirements; and

(5) The carrier's total annual common line and traffic sensitive revenue requirement.

[48 FR 10358, Mar. 11, 1983, as amended at 51 FR 17027, May 8, 1986; 52 FR 21543, June 8, 1987; 54 FR 11537, Mar. 21, 1989; 60 FR 19530, Apr. 19, 1995]

§ 69.606 Computation of average schedule company payments.

(a) Payments shall be made in accordance with a formula approved or modified by the Commission. Such formula shall be designed to produce disbursements to an average schedule company that simulate the disbursements that would be received pursuant to § 69.607 by a company that is representative of average schedule companies.

(b) The association shall submit a proposed revision of the formula for each annual period subsequent to December 31, 1986, or certify that a majority of the directors of the association believe that no revisions are warranted for such period on or before December 31 of the preceding year.

(47 U.S.C. 154 (i) and (j), 201, 202, 203, 205, 218 and 403 and 5 U.S.C. 553)

[48 FR 10358, Mar. 11, 1983, as amended at 50 FR 41356, Oct. 10, 1985; 55 FR 6990, Feb. 28, 1990]

§ 69.607 Disbursement of Carrier Common Line residue.

(a) The association shall compute a monthly net balance for each member telephone company that is not an average schedule company. If such a company has a negative net balance, the association shall bill that amount to such company. If such a company has a positive net balance, the association shall disburse that amount to such company.

(b) The net balance for such a company shall be computed by multiplying a hypothetical net balance for such a company by a factor that is computed by dividing the Carrier Common Line residue by the sum of the hypothetical net balances for such companies.

(c) The hypothetical net balance for each company shall be the sum of the hypothetical net balances for each access element. Such hypothetical net balances shall be computed in accordance with §§ 69.608 to 69.610.

[48 FR 10358, Mar. 11, 1983, as amended at 51 FR 42237, Nov. 24, 1986]

§ 69.608 Carrier Common Line hypothetical net balance.

The hypothetical net balance shall be equal to a Carrier Common Line revenue requirement for each such company that is computed in accordance with subpart F of this part.

§ 69.609 End User Common Line hypothetical net balances.

(a) If the company does not participate in the association tariff for such element, the hypothetical net balance shall be zero.

(b) If the company does participate in the association tariff for such element, the hypothetical net balance shall be computed by multiplying an amount that is computed by deducting access revenues collected by such company for such element from an End User Common Line revenue requirement for such

company that is computed in accordance with subpart F of this part by a factor that is computed by dividing access revenues collected by all such companies for such element by an End User Common Line revenue requirement for all such companies that is computed in accordance with subpart F of this part. For purposes of this calculation, access revenues collected shall include any revenues foregone because of a voluntary reduction made pursuant to § 69.104(r)(7).

[48 FR 10358, Mar. 11, 1983, as amended at 66 FR 59733, Nov. 30, 2001]

§ 69.610 Other hypothetical net balances.

(a) The hypothetical net balance for an access element other than a Common Line element shall be computed as provided in this section.

(b) If the company does not participate in the association tariff for such element, the hypothetical net balance shall be zero.

(c) If the company does participate in the association tariff for such element, the hypothetical net balance shall be computed by deducting access revenues collected for such element from the sum of expense attributable to such element and the element residue apportioned to such company. The element residue shall be apportioned among such companies in the same proportions as the net investment attributable to such element.

(d) The element residue shall be computed by deducting expenses of all participating companies attributable to such element from revenues collected by all participating companies for such element.

[48 FR 10358, Mar. 11, 1983, as amended at 51 FR 42237, Nov. 24, 1986]

Subpart H—Pricing Flexibility

SOURCE: 64 FR 51267, Sept. 22, 1999, unless otherwise noted.

§ 69.701 Application of rules in this subpart.

The rules in this subpart apply to all incumbent LECs subject to price cap regulation, as defined in § 61.3(x) of this chapter, seeking pricing flexibility on the basis of the development of competition in parts of its service area.

§ 69.703 Definitions.

For purposes of this subpart:

(a) *Channel terminations.* (1) A channel termination between an IXC POP and a serving wire center is a dedicated channel connecting an IXC POP and a serving wire center, offered for purposes of carrying special access traffic.

(2) A channel termination between a LEC end office and a customer premises is a dedicated channel connecting a LEC end office and a customer premises, offered for purposes of carrying special access traffic.

(b) *Metropolitan Statistical Area (MSA).* This term shall have the definition provided in § 22.909(a) of this chapter.

(c) *Interexchange Carrier Point of Presence (IXC POP).* The point of interconnection between an interexchange carrier's network and a local exchange carrier's network.

(d) *Wire center.* For purposes of this subpart, the term ''wire center'' shall refer to any location at which an incumbent LEC is required to provide expanded interconnection for special access pursuant to § 64.1401(a) of this chapter, and any location at which an incumbent LEC is required to provide expanded interconnection for switched transport pursuant to § 64.1401(b)(1) of this chapter.

(e) *Study area.* A common carrier's entire service area within a state.

§ 69.705 Procedure.

Price cap LECs filing petitions for pricing flexibility shall follow the procedures set forth in § 1.774 of this chapter.

§ 69.707 Geographic scope of petition.

(a) *MSA.* (1) A price cap LEC filing a petition for pricing flexibility in an MSA shall include data sufficient to support its petition, as set forth in this subpart, disaggregated by MSA.

(2) A price cap LEC may request pricing flexibility for two or more MSAs in a single petition, provided that it submits supporting data disaggregated by MSA.

(b) *Non-MSA.* (1) A price cap LEC will receive pricing flexibility with respect

to those parts of a study area that fall outside of any MSA, provided that it provides data sufficient to support a finding that competitors have collocated in a number of wire centers in that non-MSA region sufficient to satisfy the criteria for the pricing flexibility sought in the petition, as set forth in this subpart, if the region at issue were an MSA.

(2) The petitioner may aggregate data for all the non-MSA regions in a single study area for which it requests pricing flexibility in its petition.

(3) A petitioner may request pricing flexibility in the non-MSA regions of two or more of its study areas, provided that it submits supporting data disaggregated by study area.

§ 69.709 Dedicated transport and special access services other than channel terminations between LEC end offices and customer premises.

(a) *Scope*. This paragraph governs requests for pricing flexibility with respect to the following services:

(1) Entrance facilities, as described in § 69.110.

(2) Transport of traffic over dedicated transport facilities between the serving wire center and the tandem switching office, as described in § 69.111(a)(2)(iii).

(3) Direct-trunked transport, as described in § 69.112.

(4) Special access services, as described in § 69.114, other than channel terminations as defined in § 69.703(a)(2) of this part.

(b) *Phase I triggers*. To obtain Phase I pricing flexibility, as specified in § 69.727(a) of this part, for the services described in paragraph (a) of this section, a price cap LEC must show that, in the relevant area as described in § 69.707 of this part, competitors unaffiliated with the price cap LEC have collocated:

(1) In fifteen percent of the petitioner's wire centers, and that at least one such collocator in each wire center is using transport facilities owned by a transport provider other than the price cap LEC to transport traffic from that wire center; or

(2) In wire centers accounting for 30 percent of the petitioner's revenues from dedicated transport and special access services other than channel terminations between LEC end offices and customer premises, determined as specified in § 69.725 of this part, and that at least one such collocator in each wire center is using transport facilities owned by a transport provider other than the price cap LEC to transport traffic from that wire center.

(c) *Phase II triggers*. To obtain Phase II pricing flexibility, as specified in § 69.727(b) of this part, for the services described in paragraph (a) of this section, a price cap LEC must show that, in the relevant area as described in § 69.707 of this part, competitors unaffiliated with the price cap LEC have collocated:

(1) in 50 percent of the petitioner's wire centers, and that at least one such collocator in each wire center is using transport facilities owned by a transport provider other than the price cap LEC to transport traffic from that wire center; or

(2) in wire centers accounting for 65 percent of the petitioner's revenues from dedicated transport and special access services other than channel terminations between LEC end offices and customer premises, determined as specified in § 69.725 of this part, and that at least one such collocator in each wire center is using transport facilities owned by a transport provider other than the price cap LEC to transport traffic from that wire center.

§ 69.711 Channel terminations between LEC end offices and customer premises.

(a) *Scope*. This paragraph governs requests for pricing flexibility with respect to channel terminations between LEC end offices and customer premises.

(b) *Phase I triggers*. To obtain Phase I pricing flexibility, as specified in § 69.727(a) of this part, for channel terminations between LEC end offices and customer premises, a price cap LEC must show that, in the relevant area as described in § 69.707 of this part, competitors unaffiliated with the price cap LEC have collocated:

(1) In 50 percent of the petitioner's wire centers, and that at least one such collocator in each wire center is using transport facilities owned by a transport provider other than the price cap

LEC to transport traffic from that wire center; or

(2) In wire centers accounting for 65 percent of the petitioner's revenues from channel terminations between LEC end offices and customer premises, determined as specified in § 69.725 of this part, and that at least one such collocator in each wire center is using transport facilities owned by a transport provider other than the price cap LEC to transport traffic from that wire center.

(c) *Phase II triggers.* To obtain Phase II pricing flexibility, as specified in § 69.727(b) of this part, for channel terminations between LEC end offices and customer premises, a price cap LEC must show that, in the relevant area as described in § 69.707, competitors unaffiliated with the price cap LEC have collocated:

(1) In 65 percent of the petitioner's wire centers, and that at least one such collocator in each wire center is using transport facilities owned by a transport provider other than the price cap LEC to transport traffic from that wire center; or

(2) In wire centers accounting for 85 percent of the petitioner's revenues from channel terminations between LEC end offices and customer premises, determined as specified in § 69.725, and that at least one such collocator in each wire center is using transport facilities owned by a transport provider other than the price cap LEC to transport traffic from that wire center.

§ 69.713 Common line, traffic-sensitive, and tandem-switched transport services.

(a) *Scope.* This paragraph governs requests for pricing flexibility with respect to the following services:

(1) Common line services, as described in §§ 69.152, 69.153, and 69.154.

(2) Services in the traffic-sensitive basket, as described in § 61.42(d)(2) of this chapter.

(3) The traffic-sensitive components of tandem-switched transport services, as described in §§ 69.111(a)(2)(i) and (ii).

(b) *Phase I triggers.* (1) To obtain Phase I pricing flexibility, as specified in § 69.727(a), for the services identified in paragraph (a) of this section, a price cap LEC must provide convincing evidence that, in the relevant area as described in § 69.707, its unaffiliated competitors, in aggregate, offer service to at least 15 percent of the price cap LEC's customer locations.

(2) For purposes of the showing required by paragraph (b)(1) of this section, the price cap LEC may not rely on service the competitors provide solely by reselling the price cap LEC's services, or provide through unbundled network elements as defined in § 51.5 of this chapter, except that the price cap LEC may rely on service the competitors provide through the use of the price cap LEC's unbundled loops.

(c) [Reserved]

§§ 69.714–69.724 [Reserved]

§ 69.725 Attribution of revenues to particular wire centers.

If a price cap LEC elects to show, in accordance with § 69.709 or § 69.711, that competitors have collocated in wire centers accounting for a certain percentage of revenues from the services at issue, the LEC must make the following revenue allocations:

(a) For entrance facilities and channel terminations between an IXC POP and a serving wire center, the petitioner shall attribute all the revenue to the serving wire center.

(b) For channel terminations between a LEC end office and a customer premises, the petitioner shall attribute all the revenue to the LEC end office.

(c) For any dedicated service routed through multiple wire centers, the petitioner shall attribute 50 percent of the revenue to the wire center at each end of the transmission path, unless the petitioner can make a convincing case in its petition that some other allocation would be more representative of the extent of competitive entry in the MSA or the non-MSA parts of the study area at issue.

§ 69.727 Regulatory relief.

(a) *Phase I relief.* Upon satisfaction of the Phase I triggers specified in § 69.709(b), § 69.711(b), or § 69.713(b) for an MSA or the non-MSA parts of a study area, a price cap LEC will be granted the following regulatory relief in that area for the services specified in

§ 69.709(a), § 69.711(a), or § 69.713(a), respectively:

(1) Volume and term discounts;

(2) Contract tariff authority, provided that

(i) Contract tariff services are made generally available to all similarly situated customers; and

(ii) The price cap LEC excludes all contract tariff offerings from price cap regulation pursuant to § 61.42(f)(1) of this chapter.

(iii) Before the price cap LEC provides a contract tariffed service, under § 69.727(a), to one of its long-distance affiliates, as described in section 272 of the Communications Act of 1934, as amended, or § 64.1903 of this chapter, the price cap LEC certifies to the Commission that it provides service pursuant to that contract tariff to an unaffiliated customer.

(b) *Phase II relief*. Upon satisfaction of the Phase II triggers specified in § 69.709(c) or § 69.711(c) for an MSA or the non-MSA parts of a study area, a price cap LEC will be granted the following regulatory relief in that area for the services specified in §§ 69.709(a) or 69.711(a), respectively:

(1) Elimination of the rate structure requirements in subpart B of this part;

(2) Elimination of price cap regulation; and

(3) Filing of tariff revisions on one day's notice, notwithstanding the notice requirements for tariff filings specified in § 61.58 of this chapter.

§ 69.729 New services.

(a) Except for new services subject to paragraph (b) of this section, a price cap LEC may obtain pricing flexibility for a new service that has not been incorporated into a price cap basket by demonstrating in its pricing flexibility petition that the new service would be properly incorporated into one of the price cap baskets and service bands for which the price cap LEC seeks pricing flexibility.

(b) Notwithstanding paragraph (a) of this section, a price cap LEC must demonstrate satisfaction of the triggers in § 69.711(b) to be granted pricing flexibility for any new service that falls within the definition of a ''channel termination between a LEC end office and a customer premises'' as specified in § 69.703(a)(2).

§ 69.731 Low-end adjustment mechanism.

(a) Any price cap LEC obtaining Phase I or Phase II pricing flexibility for any service in any MSA in its service region, or for the non-MSA portion of any study area in its service region, shall be prohibited from making any low-end adjustment pursuant to § 61.45(d)(1)(vii) of this chapter in all or part of its service region.

(b) Any affiliate of any price cap LEC obtaining Phase I or Phase II pricing flexibility for any service in any MSA in its service region shall be prohibited from making any low-end adjustment pursuant to § 61.45(d)(1)(vii) of this chapter in all or part of its service region.

FINDING AIDS

A list of CFR titles, subtitles, chapters, subchapters and parts and an alphabetical list of agencies publishing in the CFR are included in the CFR Index and Finding Aids volume to the Code of Federal Regulations which is published separately and revised annually.

Table of CFR Titles and Chapters
Alphabetical List of Agencies Appearing in the CFR
Table of OMB Control Numbers
List of CFR Sections Affected

Table of CFR Titles and Chapters

(Revised as of October 1, 2014)

Title 1—General Provisions

I Administrative Committee of the Federal Register (Parts 1—49)
II Office of the Federal Register (Parts 50—299)
III Administrative Conference of the United States (Parts 300—399)
IV Miscellaneous Agencies (Parts 400—500)

Title 2—Grants and Agreements

SUBTITLE A—OFFICE OF MANAGEMENT AND BUDGET GUIDANCE FOR GRANTS AND AGREEMENTS
I Office of Management and Budget Governmentwide Guidance for Grants and Agreements (Parts 2—199)
II Office of Management and Budget Guidance (Parts 200—299)
SUBTITLE B—FEDERAL AGENCY REGULATIONS FOR GRANTS AND AGREEMENTS
III Department of Health and Human Services (Parts 300—399)
IV Department of Agriculture (Parts 400—499)
VI Department of State (Parts 600—699)
VII Agency for International Development (Parts 700—799)
VIII Department of Veterans Affairs (Parts 800—899)
IX Department of Energy (Parts 900—999)
XI Department of Defense (Parts 1100—1199)
XII Department of Transportation (Parts 1200—1299)
XIII Department of Commerce (Parts 1300—1399)
XIV Department of the Interior (Parts 1400—1499)
XV Environmental Protection Agency (Parts 1500—1599)
XVIII National Aeronautics and Space Administration (Parts 1800—1899)
XX United States Nuclear Regulatory Commission (Parts 2000—2099)
XXII Corporation for National and Community Service (Parts 2200—2299)
XXIII Social Security Administration (Parts 2300—2399)
XXIV Housing and Urban Development (Parts 2400—2499)
XXV National Science Foundation (Parts 2500—2599)
XXVI National Archives and Records Administration (Parts 2600—2699)
XXVII Small Business Administration (Parts 2700—2799)
XXVIII Department of Justice (Parts 2800—2899)

Title 2—Grants and Agreements—Continued

Chap.	
XXX	Department of Homeland Security (Parts 3000—3099)
XXXI	Institute of Museum and Library Services (Parts 3100—3199)
XXXII	National Endowment for the Arts (Parts 3200—3299)
XXXIII	National Endowment for the Humanities (Parts 3300—3399)
XXXIV	Department of Education (Parts 3400—3499)
XXXV	Export-Import Bank of the United States (Parts 3500—3599)
XXXVII	Peace Corps (Parts 3700—3799)
LVIII	Election Assistance Commission (Parts 5800—5899)

Title 3—The President

I	Executive Office of the President (Parts 100—199)

Title 4—Accounts

I	Government Accountability Office (Parts 1—199)
II	Recovery Accountability and Transparency Board (Parts 200—299)

Title 5—Administrative Personnel

I	Office of Personnel Management (Parts 1—1199)
II	Merit Systems Protection Board (Parts 1200—1299)
III	Office of Management and Budget (Parts 1300—1399)
V	The International Organizations Employees Loyalty Board (Parts 1500—1599)
VI	Federal Retirement Thrift Investment Board (Parts 1600—1699)
VIII	Office of Special Counsel (Parts 1800—1899)
IX	Appalachian Regional Commission (Parts 1900—1999)
XI	Armed Forces Retirement Home (Parts 2100—2199)
XIV	Federal Labor Relations Authority, General Counsel of the Federal Labor Relations Authority and Federal Service Impasses Panel (Parts 2400—2499)
XV	Office of Administration, Executive Office of the President (Parts 2500—2599)
XVI	Office of Government Ethics (Parts 2600—2699)
XXI	Department of the Treasury (Parts 3100—3199)
XXII	Federal Deposit Insurance Corporation (Parts 3200—3299)
XXIII	Department of Energy (Parts 3300—3399)
XXIV	Federal Energy Regulatory Commission (Parts 3400—3499)
XXV	Department of the Interior (Parts 3500—3599)
XXVI	Department of Defense (Parts 3600—3699)
XXVIII	Department of Justice (Parts 3800—3899)
XXIX	Federal Communications Commission (Parts 3900—3999)
XXX	Farm Credit System Insurance Corporation (Parts 4000—4099)
XXXI	Farm Credit Administration (Parts 4100—4199)

Title 5—Administrative Personnel—Continued

Chap.	
XXXIII	Overseas Private Investment Corporation (Parts 4300—4399)
XXXIV	Securities and Exchange Commission (Parts 4400—4499)
XXXV	Office of Personnel Management (Parts 4500—4599)
XXXVII	Federal Election Commission (Parts 4700—4799)
XL	Interstate Commerce Commission (Parts 5000—5099)
XLI	Commodity Futures Trading Commission (Parts 5100—5199)
XLII	Department of Labor (Parts 5200—5299)
XLIII	National Science Foundation (Parts 5300—5399)
XLV	Department of Health and Human Services (Parts 5500—5599)
XLVI	Postal Rate Commission (Parts 5600—5699)
XLVII	Federal Trade Commission (Parts 5700—5799)
XLVIII	Nuclear Regulatory Commission (Parts 5800—5899)
XLIX	Federal Labor Relations Authority (Parts 5900—5999)
L	Department of Transportation (Parts 6000—6099)
LII	Export-Import Bank of the United States (Parts 6200—6299)
LIII	Department of Education (Parts 6300—6399)
LIV	Environmental Protection Agency (Parts 6400—6499)
LV	National Endowment for the Arts (Parts 6500—6599)
LVI	National Endowment for the Humanities (Parts 6600—6699)
LVII	General Services Administration (Parts 6700—6799)
LVIII	Board of Governors of the Federal Reserve System (Parts 6800—6899)
LIX	National Aeronautics and Space Administration (Parts 6900—6999)
LX	United States Postal Service (Parts 7000—7099)
LXI	National Labor Relations Board (Parts 7100—7199)
LXII	Equal Employment Opportunity Commission (Parts 7200—7299)
LXIII	Inter-American Foundation (Parts 7300—7399)
LXIV	Merit Systems Protection Board (Parts 7400—7499)
LXV	Department of Housing and Urban Development (Parts 7500—7599)
LXVI	National Archives and Records Administration (Parts 7600—7699)
LXVII	Institute of Museum and Library Services (Parts 7700—7799)
LXVIII	Commission on Civil Rights (Parts 7800—7899)
LXIX	Tennessee Valley Authority (Parts 7900—7999)
LXX	Court Services and Offender Supervision Agency for the District of Columbia (Parts 8000—8099)
LXXI	Consumer Product Safety Commission (Parts 8100—8199)
LXXIII	Department of Agriculture (Parts 8300—8399)
LXXIV	Federal Mine Safety and Health Review Commission (Parts 8400—8499)
LXXVI	Federal Retirement Thrift Investment Board (Parts 8600—8699)
LXXVII	Office of Management and Budget (Parts 8700—8799)
LXXX	Federal Housing Finance Agency (Parts 9000—9099)
LXXXIII	Special Inspector General for Afghanistan Reconstruction (Parts 9300—9399)

Title 5—Administrative Personnel—Continued

Chap.

LXXXIV Bureau of Consumer Financial Protection (Parts 9400—9499)

LXXXVI National Credit Union Administration (Parts 9600—9699)

XCVII Department of Homeland Security Human Resources Management System (Department of Homeland Security—Office of Personnel Management) (Parts 9700—9799)

XCVII Council of the Inspectors General on Integrity and Efficiency (Parts 9800—9899)

XCIX Military Compensation and Retirement Modernization Commission (Parts 9900—9999)

Title 6—Domestic Security

I Department of Homeland Security, Office of the Secretary (Parts 1—99)

X Privacy and Civil Liberties Oversight Board (Parts 1000—1099)

Title 7—Agriculture

SUBTITLE A—OFFICE OF THE SECRETARY OF AGRICULTURE (PARTS 0—26)

SUBTITLE B—REGULATIONS OF THE DEPARTMENT OF AGRICULTURE

I Agricultural Marketing Service (Standards, Inspections, Marketing Practices), Department of Agriculture (Parts 27—209)

II Food and Nutrition Service, Department of Agriculture (Parts 210—299)

III Animal and Plant Health Inspection Service, Department of Agriculture (Parts 300—399)

IV Federal Crop Insurance Corporation, Department of Agriculture (Parts 400—499)

V Agricultural Research Service, Department of Agriculture (Parts 500—599)

VI Natural Resources Conservation Service, Department of Agriculture (Parts 600—699)

VII Farm Service Agency, Department of Agriculture (Parts 700—799)

VIII Grain Inspection, Packers and Stockyards Administration (Federal Grain Inspection Service), Department of Agriculture (Parts 800—899)

IX Agricultural Marketing Service (Marketing Agreements and Orders; Fruits, Vegetables, Nuts), Department of Agriculture (Parts 900—999)

X Agricultural Marketing Service (Marketing Agreements and Orders; Milk), Department of Agriculture (Parts 1000—1199)

XI Agricultural Marketing Service (Marketing Agreements and Orders; Miscellaneous Commodities), Department of Agriculture (Parts 1200—1299)

XIV Commodity Credit Corporation, Department of Agriculture (Parts 1400—1499)

XV Foreign Agricultural Service, Department of Agriculture (Parts 1500—1599)

Title 7—Agriculture—Continued

Chap.	
XVI	Rural Telephone Bank, Department of Agriculture (Parts 1600—1699)
XVII	Rural Utilities Service, Department of Agriculture (Parts 1700—1799)
XVIII	Rural Housing Service, Rural Business-Cooperative Service, Rural Utilities Service, and Farm Service Agency, Department of Agriculture (Parts 1800—2099)
XX	Local Television Loan Guarantee Board (Parts 2200—2299)
XXV	Office of Advocacy and Outreach, Department of Agriculture (Parts 2500—2599)
XXVI	Office of Inspector General, Department of Agriculture (Parts 2600—2699)
XXVII	Office of Information Resources Management, Department of Agriculture (Parts 2700—2799)
XXVIII	Office of Operations, Department of Agriculture (Parts 2800—2899)
XXIX	Office of Energy Policy and New Uses, Department of Agriculture (Parts 2900—2999)
XXX	Office of the Chief Financial Officer, Department of Agriculture (Parts 3000—3099)
XXXI	Office of Environmental Quality, Department of Agriculture (Parts 3100—3199)
XXXII	Office of Procurement and Property Management, Department of Agriculture (Parts 3200—3299)
XXXIII	Office of Transportation, Department of Agriculture (Parts 3300—3399)
XXXIV	National Institute of Food and Agriculture (Parts 3400—3499)
XXXV	Rural Housing Service, Department of Agriculture (Parts 3500—3599)
XXXVI	National Agricultural Statistics Service, Department of Agriculture (Parts 3600—3699)
XXXVII	Economic Research Service, Department of Agriculture (Parts 3700—3799)
XXXVIII	World Agricultural Outlook Board, Department of Agriculture (Parts 3800—3899)
XLI	[Reserved]
XLII	Rural Business-Cooperative Service and Rural Utilities Service, Department of Agriculture (Parts 4200—4299)

Title 8—Aliens and Nationality

I	Department of Homeland Security (Immigration and Naturalization) (Parts 1—499)
V	Executive Office for Immigration Review, Department of Justice (Parts 1000—1399)

Title 9—Animals and Animal Products

I	Animal and Plant Health Inspection Service, Department of Agriculture (Parts 1—199)

Title 9—Animals and Animal Products—Continued

Chap.

II Grain Inspection, Packers and Stockyards Administration (Packers and Stockyards Programs), Department of Agriculture (Parts 200—299)

III Food Safety and Inspection Service, Department of Agriculture (Parts 300—599)

Title 10—Energy

I Nuclear Regulatory Commission (Parts 0—199)

II Department of Energy (Parts 200—699)

III Department of Energy (Parts 700—999)

X Department of Energy (General Provisions) (Parts 1000—1099)

XIII Nuclear Waste Technical Review Board (Parts 1300—1399)

XVII Defense Nuclear Facilities Safety Board (Parts 1700—1799)

XVIII Northeast Interstate Low-Level Radioactive Waste Commission (Parts 1800—1899)

Title 11—Federal Elections

I Federal Election Commission (Parts 1—9099)

II Election Assistance Commission (Parts 9400—9499)

Title 12—Banks and Banking

I Comptroller of the Currency, Department of the Treasury (Parts 1—199)

II Federal Reserve System (Parts 200—299)

III Federal Deposit Insurance Corporation (Parts 300—399)

IV Export-Import Bank of the United States (Parts 400—499)

V Office of Thrift Supervision, Department of the Treasury (Parts 500—599)

VI Farm Credit Administration (Parts 600—699)

VII National Credit Union Administration (Parts 700—799)

VIII Federal Financing Bank (Parts 800—899)

IX Federal Housing Finance Board (Parts 900—999)

X Bureau of Consumer Financial Protection (Parts 1000—1099)

XI Federal Financial Institutions Examination Council (Parts 1100—1199)

XII Federal Housing Finance Agency (Parts 1200—1299)

XIII Financial Stability Oversight Council (Parts 1300—1399)

XIV Farm Credit System Insurance Corporation (Parts 1400—1499)

XV Department of the Treasury (Parts 1500—1599)

XVI Office of Financial Research (Parts 1600—1699)

XVII Office of Federal Housing Enterprise Oversight, Department of Housing and Urban Development (Parts 1700—1799)

XVIII Community Development Financial Institutions Fund, Department of the Treasury (Parts 1800—1899)

Title 13—Business Credit and Assistance

Chap.

I Small Business Administration (Parts 1—199)

III Economic Development Administration, Department of Commerce (Parts 300—399)

IV Emergency Steel Guarantee Loan Board (Parts 400—499)

V Emergency Oil and Gas Guaranteed Loan Board (Parts 500—599)

Title 14—Aeronautics and Space

I Federal Aviation Administration, Department of Transportation (Parts 1—199)

II Office of the Secretary, Department of Transportation (Aviation Proceedings) (Parts 200—399)

III Commercial Space Transportation, Federal Aviation Administration, Department of Transportation (Parts 400—1199)

V National Aeronautics and Space Administration (Parts 1200—1299)

VI Air Transportation System Stabilization (Parts 1300—1399)

Title 15—Commerce and Foreign Trade

SUBTITLE A—OFFICE OF THE SECRETARY OF COMMERCE (PARTS 0—29)

SUBTITLE B—REGULATIONS RELATING TO COMMERCE AND FOREIGN TRADE

I Bureau of the Census, Department of Commerce (Parts 30—199)

II National Institute of Standards and Technology, Department of Commerce (Parts 200—299)

III International Trade Administration, Department of Commerce (Parts 300—399)

IV Foreign-Trade Zones Board, Department of Commerce (Parts 400—499)

VII Bureau of Industry and Security, Department of Commerce (Parts 700—799)

VIII Bureau of Economic Analysis, Department of Commerce (Parts 800—899)

IX National Oceanic and Atmospheric Administration, Department of Commerce (Parts 900—999)

XI Technology Administration, Department of Commerce (Parts 1100—1199)

XIII East-West Foreign Trade Board (Parts 1300—1399)

XIV Minority Business Development Agency (Parts 1400—1499)

SUBTITLE C—REGULATIONS RELATING TO FOREIGN TRADE AGREEMENTS

XX Office of the United States Trade Representative (Parts 2000—2099)

SUBTITLE D—REGULATIONS RELATING TO TELECOMMUNICATIONS AND INFORMATION

XXIII National Telecommunications and Information Administration, Department of Commerce (Parts 2300—2399)

Title 16—Commercial Practices

Chap.

I Federal Trade Commission (Parts 0—999)

II Consumer Product Safety Commission (Parts 1000—1799)

Title 17—Commodity and Securities Exchanges

I Commodity Futures Trading Commission (Parts 1—199)

II Securities and Exchange Commission (Parts 200—399)

IV Department of the Treasury (Parts 400—499)

Title 18—Conservation of Power and Water Resources

I Federal Energy Regulatory Commission, Department of Energy (Parts 1—399)

III Delaware River Basin Commission (Parts 400—499)

VI Water Resources Council (Parts 700—799)

VIII Susquehanna River Basin Commission (Parts 800—899)

XIII Tennessee Valley Authority (Parts 1300—1399)

Title 19—Customs Duties

I U.S. Customs and Border Protection, Department of Homeland Security; Department of the Treasury (Parts 0—199)

II United States International Trade Commission (Parts 200—299)

III International Trade Administration, Department of Commerce (Parts 300—399)

IV U.S. Immigration and Customs Enforcement, Department of Homeland Security (Parts 400—599)

Title 20—Employees' Benefits

I Office of Workers' Compensation Programs, Department of Labor (Parts 1—199)

II Railroad Retirement Board (Parts 200—399)

III Social Security Administration (Parts 400—499)

IV Employees' Compensation Appeals Board, Department of Labor (Parts 500—599)

V Employment and Training Administration, Department of Labor (Parts 600—699)

VI Office of Workers' Compensation Programs, Department of Labor (Parts 700—799)

VII Benefits Review Board, Department of Labor (Parts 800—899)

VIII Joint Board for the Enrollment of Actuaries (Parts 900—999)

IX Office of the Assistant Secretary for Veterans' Employment and Training Service, Department of Labor (Parts 1000—1099)

Title 21—Food and Drugs

Chap.

I Food and Drug Administration, Department of Health and Human Services (Parts 1—1299)

II Drug Enforcement Administration, Department of Justice (Parts 1300—1399)

III Office of National Drug Control Policy (Parts 1400—1499)

Title 22—Foreign Relations

I Department of State (Parts 1—199)

II Agency for International Development (Parts 200—299)

III Peace Corps (Parts 300—399)

IV International Joint Commission, United States and Canada (Parts 400—499)

V Broadcasting Board of Governors (Parts 500—599)

VII Overseas Private Investment Corporation (Parts 700—799)

IX Foreign Service Grievance Board (Parts 900—999)

X Inter-American Foundation (Parts 1000—1099)

XI International Boundary and Water Commission, United States and Mexico, United States Section (Parts 1100—1199)

XII United States International Development Cooperation Agency (Parts 1200—1299)

XIII Millennium Challenge Corporation (Parts 1300—1399)

XIV Foreign Service Labor Relations Board; Federal Labor Relations Authority; General Counsel of the Federal Labor Relations Authority; and the Foreign Service Impasse Disputes Panel (Parts 1400—1499)

XV African Development Foundation (Parts 1500—1599)

XVI Japan-United States Friendship Commission (Parts 1600—1699)

XVII United States Institute of Peace (Parts 1700—1799)

Title 23—Highways

I Federal Highway Administration, Department of Transportation (Parts 1—999)

II National Highway Traffic Safety Administration and Federal Highway Administration, Department of Transportation (Parts 1200—1299)

III National Highway Traffic Safety Administration, Department of Transportation (Parts 1300—1399)

Title 24—Housing and Urban Development

SUBTITLE A—OFFICE OF THE SECRETARY, DEPARTMENT OF HOUSING AND URBAN DEVELOPMENT (PARTS 0—99)

SUBTITLE B—REGULATIONS RELATING TO HOUSING AND URBAN DEVELOPMENT

I Office of Assistant Secretary for Equal Opportunity, Department of Housing and Urban Development (Parts 100—199)

Title 24—Housing and Urban Development—Continued

Chap.

II Office of Assistant Secretary for Housing-Federal Housing Commissioner, Department of Housing and Urban Development (Parts 200—299)

III Government National Mortgage Association, Department of Housing and Urban Development (Parts 300—399)

IV Office of Housing and Office of Multifamily Housing Assistance Restructuring, Department of Housing and Urban Development (Parts 400—499)

V Office of Assistant Secretary for Community Planning and Development, Department of Housing and Urban Development (Parts 500—599)

VI Office of Assistant Secretary for Community Planning and Development, Department of Housing and Urban Development (Parts 600—699) [Reserved]

VII Office of the Secretary, Department of Housing and Urban Development (Housing Assistance Programs and Public and Indian Housing Programs) (Parts 700—799)

VIII Office of the Assistant Secretary for Housing—Federal Housing Commissioner, Department of Housing and Urban Development (Section 8 Housing Assistance Programs, Section 202 Direct Loan Program, Section 202 Supportive Housing for the Elderly Program and Section 811 Supportive Housing for Persons With Disabilities Program) (Parts 800—899)

IX Office of Assistant Secretary for Public and Indian Housing, Department of Housing and Urban Development (Parts 900—1699)

X Office of Assistant Secretary for Housing—Federal Housing Commissioner, Department of Housing and Urban Development (Interstate Land Sales Registration Program) (Parts 1700—1799)

XII Office of Inspector General, Department of Housing and Urban Development (Parts 2000—2099)

XV Emergency Mortgage Insurance and Loan Programs, Department of Housing and Urban Development (Parts 2700—2799) [Reserved]

XX Office of Assistant Secretary for Housing—Federal Housing Commissioner, Department of Housing and Urban Development (Parts 3200—3899)

XXIV Board of Directors of the HOPE for Homeowners Program (Parts 4000—4099) [Reserved]

XXV Neighborhood Reinvestment Corporation (Parts 4100—4199)

Title 25—Indians

I Bureau of Indian Affairs, Department of the Interior (Parts 1—299)

II Indian Arts and Crafts Board, Department of the Interior (Parts 300—399)

III National Indian Gaming Commission, Department of the Interior (Parts 500—599)

IV Office of Navajo and Hopi Indian Relocation (Parts 700—799)

Title 25—Indians—Continued

Chap.

V Bureau of Indian Affairs, Department of the Interior, and Indian Health Service, Department of Health and Human Services (Part 900)

VI Office of the Assistant Secretary-Indian Affairs, Department of the Interior (Parts 1000—1199)

VII Office of the Special Trustee for American Indians, Department of the Interior (Parts 1200—1299)

Title 26—Internal Revenue

I Internal Revenue Service, Department of the Treasury (Parts 1—End)

Title 27—Alcohol, Tobacco Products and Firearms

I Alcohol and Tobacco Tax and Trade Bureau, Department of the Treasury (Parts 1—399)

II Bureau of Alcohol, Tobacco, Firearms, and Explosives, Department of Justice (Parts 400—699)

Title 28—Judicial Administration

I Department of Justice (Parts 0—299)

III Federal Prison Industries, Inc., Department of Justice (Parts 300—399)

V Bureau of Prisons, Department of Justice (Parts 500—599)

VI Offices of Independent Counsel, Department of Justice (Parts 600—699)

VII Office of Independent Counsel (Parts 700—799)

VIII Court Services and Offender Supervision Agency for the District of Columbia (Parts 800—899)

IX National Crime Prevention and Privacy Compact Council (Parts 900—999)

XI Department of Justice and Department of State (Parts 1100—1199)

Title 29—Labor

SUBTITLE A—OFFICE OF THE SECRETARY OF LABOR (PARTS 0—99)

SUBTITLE B—REGULATIONS RELATING TO LABOR

I National Labor Relations Board (Parts 100—199)

II Office of Labor-Management Standards, Department of Labor (Parts 200—299)

III National Railroad Adjustment Board (Parts 300—399)

IV Office of Labor-Management Standards, Department of Labor (Parts 400—499)

V Wage and Hour Division, Department of Labor (Parts 500—899)

IX Construction Industry Collective Bargaining Commission (Parts 900—999)

Title 29—Labor—Continued

Chap.

X National Mediation Board (Parts 1200—1299)

XII Federal Mediation and Conciliation Service (Parts 1400—1499)

XIV Equal Employment Opportunity Commission (Parts 1600—1699)

XVII Occupational Safety and Health Administration, Department of Labor (Parts 1900—1999)

XX Occupational Safety and Health Review Commission (Parts 2200—2499)

XXV Employee Benefits Security Administration, Department of Labor (Parts 2500—2599)

XXVII Federal Mine Safety and Health Review Commission (Parts 2700—2799)

XL Pension Benefit Guaranty Corporation (Parts 4000—4999)

Title 30—Mineral Resources

I Mine Safety and Health Administration, Department of Labor (Parts 1—199)

II Bureau of Safety and Environmental Enforcement, Department of the Interior (Parts 200—299)

IV Geological Survey, Department of the Interior (Parts 400—499)

V Bureau of Ocean Energy Management, Department of the Interior (Parts 500—599)

VII Office of Surface Mining Reclamation and Enforcement, Department of the Interior (Parts 700—999)

XII Office of Natural Resources Revenue, Department of the Interior (Parts 1200—1299)

Title 31—Money and Finance: Treasury

SUBTITLE A—OFFICE OF THE SECRETARY OF THE TREASURY (PARTS 0—50)

SUBTITLE B—REGULATIONS RELATING TO MONEY AND FINANCE

I Monetary Offices, Department of the Treasury (Parts 51—199)

II Fiscal Service, Department of the Treasury (Parts 200—399)

IV Secret Service, Department of the Treasury (Parts 400—499)

V Office of Foreign Assets Control, Department of the Treasury (Parts 500—599)

VI Bureau of Engraving and Printing, Department of the Treasury (Parts 600—699)

VII Federal Law Enforcement Training Center, Department of the Treasury (Parts 700—799)

VIII Office of International Investment, Department of the Treasury (Parts 800—899)

IX Federal Claims Collection Standards (Department of the Treasury—Department of Justice) (Parts 900—999)

X Financial Crimes Enforcement Network, Department of the Treasury (Parts 1000—1099)

Title 32—National Defense

Chap.

SUBTITLE A—DEPARTMENT OF DEFENSE

I Office of the Secretary of Defense (Parts 1—399)

V Department of the Army (Parts 400—699)

VI Department of the Navy (Parts 700—799)

VII Department of the Air Force (Parts 800—1099)

SUBTITLE B—OTHER REGULATIONS RELATING TO NATIONAL DEFENSE

XII Defense Logistics Agency (Parts 1200—1299)

XVI Selective Service System (Parts 1600—1699)

XVII Office of the Director of National Intelligence (Parts 1700—1799)

XVIII National Counterintelligence Center (Parts 1800—1899)

XIX Central Intelligence Agency (Parts 1900—1999)

XX Information Security Oversight Office, National Archives and Records Administration (Parts 2000—2099)

XXI National Security Council (Parts 2100—2199)

XXIV Office of Science and Technology Policy (Parts 2400—2499)

XXVII Office for Micronesian Status Negotiations (Parts 2700—2799)

XXVIII Office of the Vice President of the United States (Parts 2800—2899)

Title 33—Navigation and Navigable Waters

I Coast Guard, Department of Homeland Security (Parts 1—199)

II Corps of Engineers, Department of the Army (Parts 200—399)

IV Saint Lawrence Seaway Development Corporation, Department of Transportation (Parts 400—499)

Title 34—Education

SUBTITLE A—OFFICE OF THE SECRETARY, DEPARTMENT OF EDUCATION (PARTS 1—99)

SUBTITLE B—REGULATIONS OF THE OFFICES OF THE DEPARTMENT OF EDUCATION

I Office for Civil Rights, Department of Education (Parts 100—199)

II Office of Elementary and Secondary Education, Department of Education (Parts 200—299)

III Office of Special Education and Rehabilitative Services, Department of Education (Parts 300—399)

IV Office of Vocational and Adult Education, Department of Education (Parts 400—499)

V Office of Bilingual Education and Minority Languages Affairs, Department of Education (Parts 500—599)

VI Office of Postsecondary Education, Department of Education (Parts 600—699)

VII Office of Educational Research and Improvement, Department of Education (Parts 700—799)[Reserved]

SUBTITLE C—REGULATIONS RELATING TO EDUCATION

Title 34—Education—Continued

Chap.

XI National Institute for Literacy (Parts 1100—1199)

XII National Council on Disability (Parts 1200—1299)

Title 35 [Reserved]

Title 36—Parks, Forests, and Public Property

I National Park Service, Department of the Interior (Parts 1—199)

II Forest Service, Department of Agriculture (Parts 200—299)

III Corps of Engineers, Department of the Army (Parts 300—399)

IV American Battle Monuments Commission (Parts 400—499)

V Smithsonian Institution (Parts 500—599)

VI [Reserved]

VII Library of Congress (Parts 700—799)

VIII Advisory Council on Historic Preservation (Parts 800—899)

IX Pennsylvania Avenue Development Corporation (Parts 900—999)

X Presidio Trust (Parts 1000—1099)

XI Architectural and Transportation Barriers Compliance Board (Parts 1100—1199)

XII National Archives and Records Administration (Parts 1200—1299)

XV Oklahoma City National Memorial Trust (Parts 1500—1599)

XVI Morris K. Udall Scholarship and Excellence in National Environmental Policy Foundation (Parts 1600—1699)

Title 37—Patents, Trademarks, and Copyrights

I United States Patent and Trademark Office, Department of Commerce (Parts 1—199)

II U.S. Copyright Office, Library of Congress (Parts 200—299)

III Copyright Royalty Board, Library of Congress (Parts 300—399)

IV Assistant Secretary for Technology Policy, Department of Commerce (Parts 400—599)

Title 38—Pensions, Bonuses, and Veterans' Relief

I Department of Veterans Affairs (Parts 0—199)

II Armed Forces Retirement Home (Parts 200—299)

Title 39—Postal Service

I United States Postal Service (Parts 1—999)

III Postal Regulatory Commission (Parts 3000—3099)

Title 40—Protection of Environment

I Environmental Protection Agency (Parts 1—1099)

Title 40—Protection of Environment—Continued

Chap.

IV Environmental Protection Agency and Department of Justice (Parts 1400—1499)

V Council on Environmental Quality (Parts 1500—1599)

VI Chemical Safety and Hazard Investigation Board (Parts 1600—1699)

VII Environmental Protection Agency and Department of Defense; Uniform National Discharge Standards for Vessels of the Armed Forces (Parts 1700—1799)

VIII Gulf Coast Ecosystem Restoration Council (Parts 1800—1899)

Title 41—Public Contracts and Property Management

SUBTITLE A—FEDERAL PROCUREMENT REGULATIONS SYSTEM [NOTE]

SUBTITLE B—OTHER PROVISIONS RELATING TO PUBLIC CONTRACTS

50 Public Contracts, Department of Labor (Parts 50–1—50–999)

51 Committee for Purchase From People Who Are Blind or Severely Disabled (Parts 51–1—51–99)

60 Office of Federal Contract Compliance Programs, Equal Employment Opportunity, Department of Labor (Parts 60–1—60–999)

61 Office of the Assistant Secretary for Veterans' Employment and Training Service, Department of Labor (Parts 61–1—61–999)

62—100 [Reserved]

SUBTITLE C—FEDERAL PROPERTY MANAGEMENT REGULATIONS SYSTEM

101 Federal Property Management Regulations (Parts 101–1—101–99)

102 Federal Management Regulation (Parts 102–1—102–299)

103—104 [Reserved]

105 General Services Administration (Parts 105–1—105–999)

109 Department of Energy Property Management Regulations (Parts 109–1—109–99)

114 Department of the Interior (Parts 114–1—114–99)

115 Environmental Protection Agency (Parts 115–1—115–99)

128 Department of Justice (Parts 128–1—128–99)

129—200 [Reserved]

SUBTITLE D—OTHER PROVISIONS RELATING TO PROPERTY MANAGEMENT [RESERVED]

SUBTITLE E—FEDERAL INFORMATION RESOURCES MANAGEMENT REGULATIONS SYSTEM [RESERVED]

SUBTITLE F—FEDERAL TRAVEL REGULATION SYSTEM

300 General (Parts 300–1—300–99)

301 Temporary Duty (TDY) Travel Allowances (Parts 301–1—301–99)

302 Relocation Allowances (Parts 302–1—302–99)

303 Payment of Expenses Connected with the Death of Certain Employees (Part 303–1—303–99)

304 Payment of Travel Expenses from a Non-Federal Source (Parts 304–1—304–99)

Title 42—Public Health

Chap.

I Public Health Service, Department of Health and Human Services (Parts 1—199)

IV Centers for Medicare & Medicaid Services, Department of Health and Human Services (Parts 400—599)

V Office of Inspector General-Health Care, Department of Health and Human Services (Parts 1000—1999)

Title 43—Public Lands: Interior

SUBTITLE A—OFFICE OF THE SECRETARY OF THE INTERIOR (PARTS 1—199)

SUBTITLE B—REGULATIONS RELATING TO PUBLIC LANDS

I Bureau of Reclamation, Department of the Interior (Parts 400—999)

II Bureau of Land Management, Department of the Interior (Parts 1000—9999)

III Utah Reclamation Mitigation and Conservation Commission (Parts 10000—10099)

Title 44—Emergency Management and Assistance

I Federal Emergency Management Agency, Department of Homeland Security (Parts 0—399)

IV Department of Commerce and Department of Transportation (Parts 400—499)

Title 45—Public Welfare

SUBTITLE A—DEPARTMENT OF HEALTH AND HUMAN SERVICES (PARTS 1—199)

SUBTITLE B—REGULATIONS RELATING TO PUBLIC WELFARE

II Office of Family Assistance (Assistance Programs), Administration for Children and Families, Department of Health and Human Services (Parts 200—299)

III Office of Child Support Enforcement (Child Support Enforcement Program), Administration for Children and Families, Department of Health and Human Services (Parts 300—399)

IV Office of Refugee Resettlement, Administration for Children and Families, Department of Health and Human Services (Parts 400—499)

V Foreign Claims Settlement Commission of the United States, Department of Justice (Parts 500—599)

VI National Science Foundation (Parts 600—699)

VII Commission on Civil Rights (Parts 700—799)

VIII Office of Personnel Management (Parts 800—899)

X Office of Community Services, Administration for Children and Families, Department of Health and Human Services (Parts 1000—1099)

XI National Foundation on the Arts and the Humanities (Parts 1100—1199)

Title 45—Public Welfare—Continued

Chap.

XII Corporation for National and Community Service (Parts 1200—1299)

XIII Office of Human Development Services, Department of Health and Human Services (Parts 1300—1399)

XVI Legal Services Corporation (Parts 1600—1699)

XVII National Commission on Libraries and Information Science (Parts 1700—1799)

XVIII Harry S. Truman Scholarship Foundation (Parts 1800—1899)

XXI Commission on Fine Arts (Parts 2100—2199)

XXIII Arctic Research Commission (Part 2301)

XXIV James Madison Memorial Fellowship Foundation (Parts 2400—2499)

XXV Corporation for National and Community Service (Parts 2500—2599)

Title 46—Shipping

I Coast Guard, Department of Homeland Security (Parts 1—199)

II Maritime Administration, Department of Transportation (Parts 200—399)

III Coast Guard (Great Lakes Pilotage), Department of Homeland Security (Parts 400—499)

IV Federal Maritime Commission (Parts 500—599)

Title 47—Telecommunication

I Federal Communications Commission (Parts 0—199)

II Office of Science and Technology Policy and National Security Council (Parts 200—299)

III National Telecommunications and Information Administration, Department of Commerce (Parts 300—399)

IV National Telecommunications and Information Administration, Department of Commerce, and National Highway Traffic Safety Administration, Department of Transportation (Parts 400—499)

Title 48—Federal Acquisition Regulations System

1 Federal Acquisition Regulation (Parts 1—99)

2 Defense Acquisition Regulations System, Department of Defense (Parts 200—299)

3 Health and Human Services (Parts 300—399)

4 Department of Agriculture (Parts 400—499)

5 General Services Administration (Parts 500—599)

6 Department of State (Parts 600—699)

7 Agency for International Development (Parts 700—799)

8 Department of Veterans Affairs (Parts 800—899)

9 Department of Energy (Parts 900—999)

Title 48—Federal Acquisition Regulations System—Continued

Chap.

10 Department of the Treasury (Parts 1000—1099)

12 Department of Transportation (Parts 1200—1299)

13 Department of Commerce (Parts 1300—1399)

14 Department of the Interior (Parts 1400—1499)

15 Environmental Protection Agency (Parts 1500—1599)

16 Office of Personnel Management, Federal Employees Health Benefits Acquisition Regulation (Parts 1600—1699)

17 Office of Personnel Management (Parts 1700—1799)

18 National Aeronautics and Space Administration (Parts 1800—1899)

19 Broadcasting Board of Governors (Parts 1900—1999)

20 Nuclear Regulatory Commission (Parts 2000—2099)

21 Office of Personnel Management, Federal Employees Group Life Insurance Federal Acquisition Regulation (Parts 2100—2199)

23 Social Security Administration (Parts 2300—2399)

24 Department of Housing and Urban Development (Parts 2400—2499)

25 National Science Foundation (Parts 2500—2599)

28 Department of Justice (Parts 2800—2899)

29 Department of Labor (Parts 2900—2999)

30 Department of Homeland Security, Homeland Security Acquisition Regulation (HSAR) (Parts 3000—3099)

34 Department of Education Acquisition Regulation (Parts 3400—3499)

51 Department of the Army Acquisition Regulations (Parts 5100—5199)

52 Department of the Navy Acquisition Regulations (Parts 5200—5299)

53 Department of the Air Force Federal Acquisition Regulation Supplement (Parts 5300—5399) [Reserved]

54 Defense Logistics Agency, Department of Defense (Parts 5400—5499)

57 African Development Foundation (Parts 5700—5799)

61 Civilian Board of Contract Appeals, General Services Administration (Parts 6100—6199)

63 Department of Transportation Board of Contract Appeals (Parts 6300—6399)

99 Cost Accounting Standards Board, Office of Federal Procurement Policy, Office of Management and Budget (Parts 9900—9999)

Title 49—Transportation

SUBTITLE A—OFFICE OF THE SECRETARY OF TRANSPORTATION (PARTS 1—99)

SUBTITLE B—OTHER REGULATIONS RELATING TO TRANSPORTATION

I Pipeline and Hazardous Materials Safety Administration, Department of Transportation (Parts 100—199)

Title 49—Transportation—Continued

Chap.

II Federal Railroad Administration, Department of Transportation (Parts 200—299)

III Federal Motor Carrier Safety Administration, Department of Transportation (Parts 300—399)

IV Coast Guard, Department of Homeland Security (Parts 400—499)

V National Highway Traffic Safety Administration, Department of Transportation (Parts 500—599)

VI Federal Transit Administration, Department of Transportation (Parts 600—699)

VII National Railroad Passenger Corporation (AMTRAK) (Parts 700—799)

VIII National Transportation Safety Board (Parts 800—999)

X Surface Transportation Board, Department of Transportation (Parts 1000—1399)

XI Research and Innovative Technology Administration, Department of Transportation (Parts 1400—1499) [Reserved]

XII Transportation Security Administration, Department of Homeland Security (Parts 1500—1699)

Title 50—Wildlife and Fisheries

I United States Fish and Wildlife Service, Department of the Interior (Parts 1—199)

II National Marine Fisheries Service, National Oceanic and Atmospheric Administration, Department of Commerce (Parts 200—299)

III International Fishing and Related Activities (Parts 300—399)

IV Joint Regulations (United States Fish and Wildlife Service, Department of the Interior and National Marine Fisheries Service, National Oceanic and Atmospheric Administration, Department of Commerce); Endangered Species Committee Regulations (Parts 400—499)

V Marine Mammal Commission (Parts 500—599)

VI Fishery Conservation and Management, National Oceanic and Atmospheric Administration, Department of Commerce (Parts 600—699)

Alphabetical List of Agencies Appearing in the CFR

(Revised as of October 1, 2014)

Agency	CFR Title, Subtitle or Chapter
Administrative Committee of the Federal Register	1, I
Administrative Conference of the United States	1, III
Advisory Council on Historic Preservation	36, VIII
Advocacy and Outreach, Office of	7, XXV
Afghanistan Reconstruction, Special Inspector General for	22, LXXXIII
African Development Foundation	22, XV
Federal Acquisition Regulation	48, 57
Agency for International Development	2, VII; 22, II
Federal Acquisition Regulation	48, 7
Agricultural Marketing Service	7, I, IX, X, XI
Agricultural Research Service	7, V
Agriculture Department	2, IV; 5, LXXIII
Advocacy and Outreach, Office of	7, XXV
Agricultural Marketing Service	7, I, IX, X, XI
Agricultural Research Service	7, V
Animal and Plant Health Inspection Service	7, III; 9, I
Chief Financial Officer, Office of	7, XXX
Commodity Credit Corporation	7, XIV
Economic Research Service	7, XXXVII
Energy Policy and New Uses, Office of	2, IX; 7, XXIX
Environmental Quality, Office of	7, XXXI
Farm Service Agency	7, VII, XVIII
Federal Acquisition Regulation	48, 4
Federal Crop Insurance Corporation	7, IV
Food and Nutrition Service	7, II
Food Safety and Inspection Service	9, III
Foreign Agricultural Service	7, XV
Forest Service	36, II
Grain Inspection, Packers and Stockyards Administration	7, VIII; 9, II
Information Resources Management, Office of	7, XXVII
Inspector General, Office of	7, XXVI
National Agricultural Library	7, XLI
National Agricultural Statistics Service	7, XXXVI
National Institute of Food and Agriculture	7, XXXIV
Natural Resources Conservation Service	7, VI
Operations, Office of	7, XXVIII
Procurement and Property Management, Office of	7, XXXII
Rural Business-Cooperative Service	7, XVIII, XLII, L
Rural Development Administration	7, XLII
Rural Housing Service	7, XVIII, XXXV, L
Rural Telephone Bank	7, XVI
Rural Utilities Service	7, XVII, XVIII, XLII, L
Secretary of Agriculture, Office of	7, Subtitle A
Transportation, Office of	7, XXXIII
World Agricultural Outlook Board	7, XXXVIII
Air Force Department	32, VII
Federal Acquisition Regulation Supplement	48, 53
Air Transportation Stabilization Board	14, VI
Alcohol and Tobacco Tax and Trade Bureau	27, I
Alcohol, Tobacco, Firearms, and Explosives, Bureau of	27, II
AMTRAK	49, VII
American Battle Monuments Commission	36, IV
American Indians, Office of the Special Trustee	25, VII

Agency	CFR Title, Subtitle or Chapter
Animal and Plant Health Inspection Service	7, III; 9, I
Appalachian Regional Commission	5, IX
Architectural and Transportation Barriers Compliance Board	36, XI
Arctic Research Commission	45, XXIII
Armed Forces Retirement Home	5, XI
Army Department	32, V
Engineers, Corps of	33, II; 36, III
Federal Acquisition Regulation	48, 51
Bilingual Education and Minority Languages Affairs, Office of	34, V
Blind or Severely Disabled, Committee for Purchase from People Who Are	41, 51
Broadcasting Board of Governors	22, V
Federal Acquisition Regulation	48, 19
Bureau of Ocean Energy Management, Regulation, and Enforcement	30, II
Census Bureau	15, I
Centers for Medicare & Medicaid Services	42, IV
Central Intelligence Agency	32, XIX
Chemical Safety and Hazardous Investigation Board	40, VI
Chief Financial Officer, Office of	7, XXX
Child Support Enforcement, Office of	45, III
Children and Families, Administration for	45, II, III, IV, X
Civil Rights, Commission on	5, LXVIII; 45, VII
Civil Rights, Office for	34, I
Council of the Inspectors General on Integrity and Efficiency	5, XCVIII
Court Services and Offender Supervision Agency for the District of Columbia	5, LXX
Coast Guard	33, I; 46, I; 49, IV
Coast Guard (Great Lakes Pilotage)	46, III
Commerce Department	2, XIII; 44, IV; 50, VI
Census Bureau	15, I
Economic Analysis, Bureau of	15, VIII
Economic Development Administration	13, III
Emergency Management and Assistance	44, IV
Federal Acquisition Regulation	48, 13
Foreign-Trade Zones Board	15, IV
Industry and Security, Bureau of	15, VII
International Trade Administration	15, III; 19, III
National Institute of Standards and Technology	15, II
National Marine Fisheries Service	50, II, IV
National Oceanic and Atmospheric Administration	15, IX; 50, II, III, IV, VI
National Telecommunications and Information Administration	15, XXIII; 47, III, IV
National Weather Service	15, IX
Patent and Trademark Office, United States	37, I
Productivity, Technology and Innovation, Assistant Secretary for	37, IV
Secretary of Commerce, Office of	15, Subtitle A
Technology Administration	15, XI
Technology Policy, Assistant Secretary for	37, IV
Commercial Space Transportation	14, III
Commodity Credit Corporation	7, XIV
Commodity Futures Trading Commission	5, XLI; 17, I
Community Planning and Development, Office of Assistant Secretary for	24, V, VI
Community Services, Office of	45, X
Comptroller of the Currency	12, I
Construction Industry Collective Bargaining Commission	29, IX
Consumer Financial Protection Bureau	5, LXXXIV; 12, X
Consumer Product Safety Commission	5, LXXI; 16, II
Copyright Royalty Board	37, III
Corporation for National and Community Service	2, XXII; 45, XII, XXV
Cost Accounting Standards Board	48, 99
Council on Environmental Quality	40, V
Court Services and Offender Supervision Agency for the District of Columbia	5, LXX; 28, VIII
Customs and Border Protection	19, I

Agency	CFR Title, Subtitle or Chapter
Defense Contract Audit Agency	32, I
Defense Department	2, XI; 5, XXVI; 32, Subtitle A; 40, VII
Advanced Research Projects Agency	32, I
Air Force Department	32, VII
Army Department	32, V; 33, II; 36, III, 48, 51
Defense Acquisition Regulations System	48, 2
Defense Intelligence Agency	32, I
Defense Logistics Agency	32, I, XII; 48, 54
Engineers, Corps of	33, II; 36, III
National Imagery and Mapping Agency	32, I
Navy Department	32, VI; 48, 52
Secretary of Defense, Office of	2, XI; 32, I
Defense Contract Audit Agency	32, I
Defense Intelligence Agency	32, I
Defense Logistics Agency	32, XII; 48, 54
Defense Nuclear Facilities Safety Board	10, XVII
Delaware River Basin Commission	18, III
District of Columbia, Court Services and Offender Supervision Agency for the	5, LXX; 28, VIII
Drug Enforcement Administration	21, II
East-West Foreign Trade Board	15, XIII
Economic Analysis, Bureau of	15, VIII
Economic Development Administration	13, III
Economic Research Service	7, XXXVII
Education, Department of	2, XXXIV; 5, LIII
Bilingual Education and Minority Languages Affairs, Office of	34, V
Civil Rights, Office for	34, I
Educational Research and Improvement, Office of	34, VII
Elementary and Secondary Education, Office of	34, II
Federal Acquisition Regulation	48, 34
Postsecondary Education, Office of	34, VI
Secretary of Education, Office of	34, Subtitle A
Special Education and Rehabilitative Services, Office of	34, III
Vocational and Adult Education, Office of	34, IV
Educational Research and Improvement, Office of	34, VII
Election Assistance Commission	2, LVIII; 11, II
Elementary and Secondary Education, Office of	34, II
Emergency Oil and Gas Guaranteed Loan Board	13, V
Emergency Steel Guarantee Loan Board	13, IV
Employee Benefits Security Administration	29, XXV
Employees' Compensation Appeals Board	20, IV
Employees Loyalty Board	5, V
Employment and Training Administration	20, V
Employment Standards Administration	20, VI
Endangered Species Committee	50, IV
Energy, Department of	2, IX; 5, XXIII; 10, II, III, X
Federal Acquisition Regulation	48, 9
Federal Energy Regulatory Commission	5, XXIV; 18, I
Property Management Regulations	41, 109
Energy, Office of	7, XXIX
Engineers, Corps of	33, II; 36, III
Engraving and Printing, Bureau of	31, VI
Environmental Protection Agency	2, XV; 5, LIV; 40, I, IV, VII
Federal Acquisition Regulation	48, 15
Property Management Regulations	41, 115
Environmental Quality, Office of	7, XXXI
Equal Employment Opportunity Commission	5, LXII; 29, XIV
Equal Opportunity, Office of Assistant Secretary for	24, I
Executive Office of the President	3, I
Administration, Office of	5, XV
Environmental Quality, Council on	40, V
Management and Budget, Office of	2, Subtitle A; 5, III, LXXVII; 14, VI; 48, 99

Agency	CFR Title, Subtitle or Chapter
National Drug Control Policy, Office of	21, III
National Security Council	32, XXI; 47, 2
Presidential Documents	3
Science and Technology Policy, Office of	32, XXIV; 47, II
Trade Representative, Office of the United States	15, XX
Export-Import Bank of the United States	2, XXXV; 5, LII; 12, IV
Family Assistance, Office of	45, II
Farm Credit Administration	5, XXXI; 12, VI
Farm Credit System Insurance Corporation	5, XXX; 12, XIV
Farm Service Agency	7, VII, XVIII
Federal Acquisition Regulation	48, 1
Federal Aviation Administration	14, I
Commercial Space Transportation	14, III
Federal Claims Collection Standards	31, IX
Federal Communications Commission	5, XXIX; 47, I
Federal Contract Compliance Programs, Office of	41, 60
Federal Crop Insurance Corporation	7, IV
Federal Deposit Insurance Corporation	5, XXII; 12, III
Federal Election Commission	5, XXXVII; 11, I
Federal Emergency Management Agency	44, I
Federal Employees Group Life Insurance Federal Acquisition Regulation	48, 21
Federal Employees Health Benefits Acquisition Regulation	48, 16
Federal Energy Regulatory Commission	5, XXIV; 18, I
Federal Financial Institutions Examination Council	12, XI
Federal Financing Bank	12, VIII
Federal Highway Administration	23, I, II
Federal Home Loan Mortgage Corporation	1, IV
Federal Housing Enterprise Oversight Office	12, XVII
Federal Housing Finance Agency	5, LXXX; 12, XII
Federal Housing Finance Board	12, IX
Federal Labor Relations Authority	5, XIV, XLIX; 22, XIV
Federal Law Enforcement Training Center	31, VII
Federal Management Regulation	41, 102
Federal Maritime Commission	46, IV
Federal Mediation and Conciliation Service	29, XII
Federal Mine Safety and Health Review Commission	5, LXXIV; 29, XXVII
Federal Motor Carrier Safety Administration	49, III
Federal Prison Industries, Inc.	28, III
Federal Procurement Policy Office	48, 99
Federal Property Management Regulations	41, 101
Federal Railroad Administration	49, II
Federal Register, Administrative Committee of	1, I
Federal Register, Office of	1, II
Federal Reserve System	12, II
Board of Governors	5, LVIII
Federal Retirement Thrift Investment Board	5, VI, LXXVI
Federal Service Impasses Panel	5, XIV
Federal Trade Commission	5, XLVII; 16, I
Federal Transit Administration	49, VI
Federal Travel Regulation System	41, Subtitle F
Financial Crimes Enforcement Network	31, X
Financial Research Office	12, XVI
Financial Stability Oversight Council	12, XIII
Fine Arts, Commission on	45, XXI
Fiscal Service	31, II
Fish and Wildlife Service, United States	50, I, IV
Food and Drug Administration	21, I
Food and Nutrition Service	7, II
Food Safety and Inspection Service	9, III
Foreign Agricultural Service	7, XV
Foreign Assets Control, Office of	31, V
Foreign Claims Settlement Commission of the United States	45, V
Foreign Service Grievance Board	22, IX
Foreign Service Impasse Disputes Panel	22, XIV
Foreign Service Labor Relations Board	22, XIV
Foreign-Trade Zones Board	15, IV

Agency	CFR Title, Subtitle or Chapter
Forest Service	36, II
General Services Administration	5, LVII; 41, 105
Contract Appeals, Board of	48, 61
Federal Acquisition Regulation	48, 5
Federal Management Regulation	41, 102
Federal Property Management Regulations	41, 101
Federal Travel Regulation System	41, Subtitle F
General	41, 300
Payment From a Non-Federal Source for Travel Expenses	41, 304
Payment of Expenses Connected With the Death of Certain Employees	41, 303
Relocation Allowances	41, 302
Temporary Duty (TDY) Travel Allowances	41, 301
Geological Survey	30, IV
Government Accountability Office	4, I
Government Ethics, Office of	5, XVI
Government National Mortgage Association	24, III
Grain Inspection, Packers and Stockyards Administration	7, VIII; 9, II
Gulf Coast Ecosystem Restoration Council	40, VIII
Harry S. Truman Scholarship Foundation	45, XVIII
Health and Human Services, Department of	2, III; 5, XLV; 45, Subtitle A,
Centers for Medicare & Medicaid Services	42, IV
Child Support Enforcement, Office of	45, III
Children and Families, Administration for	45, II, III, IV, X
Community Services, Office of	45, X
Family Assistance, Office of	45, II
Federal Acquisition Regulation	48, 3
Food and Drug Administration	21, I
Human Development Services, Office of	45, XIII
Indian Health Service	25, V
Inspector General (Health Care), Office of	42, V
Public Health Service	42, I
Refugee Resettlement, Office of	45, IV
Homeland Security, Department of	2, XXX; 6, I; 8, I
Coast Guard	33, I; 46, I; 49, IV
Coast Guard (Great Lakes Pilotage)	46, III
Customs and Border Protection	19, I
Federal Emergency Management Agency	44, I
Human Resources Management and Labor Relations Systems	5, XCVII
Immigration and Customs Enforcement Bureau	19, IV
Transportation Security Administration	49, XII
HOPE for Homeowners Program, Board of Directors of	24, XXIV
Housing and Urban Development, Department of	2, XXIV; 5, LXV; 24, Subtitle B
Community Planning and Development, Office of Assistant Secretary for	24, V, VI
Equal Opportunity, Office of Assistant Secretary for	24, I
Federal Acquisition Regulation	48, 24
Federal Housing Enterprise Oversight, Office of	12, XVII
Government National Mortgage Association	24, III
Housing—Federal Housing Commissioner, Office of Assistant Secretary for	24, II, VIII, X, XX
Housing, Office of, and Multifamily Housing Assistance Restructuring, Office of	24, IV
Inspector General, Office of	24, XII
Public and Indian Housing, Office of Assistant Secretary for	24, IX
Secretary, Office of	24, Subtitle A, VII
Housing—Federal Housing Commissioner, Office of Assistant Secretary for	24, II, VIII, X, XX
Housing, Office of, and Multifamily Housing Assistance Restructuring, Office of	24, IV
Human Development Services, Office of	45, XIII
Immigration and Customs Enforcement Bureau	19, IV
Immigration Review, Executive Office for	8, V
Independent Counsel, Office of	28, VII

Agency	CFR Title, Subtitle or Chapter
Indian Affairs, Bureau of	25, I, V
Indian Affairs, Office of the Assistant Secretary	25, VI
Indian Arts and Crafts Board	25, II
Indian Health Service	25, V
Industry and Security, Bureau of	15, VII
Information Resources Management, Office of	7, XXVII
Information Security Oversight Office, National Archives and Records Administration	32, XX
Inspector General	
Agriculture Department	7, XXVI
Health and Human Services Department	42, V
Housing and Urban Development Department	24, XII, XV
Institute of Peace, United States	22, XVII
Inter-American Foundation	5, LXIII; 22, X
Interior Department	2, XIV
American Indians, Office of the Special Trustee	25, VII
Bureau of Ocean Energy Management, Regulation, and Enforcement	30, II
Endangered Species Committee	50, IV
Federal Acquisition Regulation	48, 14
Federal Property Management Regulations System	41, 114
Fish and Wildlife Service, United States	50, I, IV
Geological Survey	30, IV
Indian Affairs, Bureau of	25, I, V
Indian Affairs, Office of the Assistant Secretary	25, VI
Indian Arts and Crafts Board	25, II
Land Management, Bureau of	43, II
National Indian Gaming Commission	25, III
National Park Service	36, I
Natural Resource Revenue, Office of	30, XII
Ocean Energy Management, Bureau of	30, V
Reclamation, Bureau of	43, I
Secretary of the Interior, Office of	2, XIV; 43, Subtitle A
Surface Mining Reclamation and Enforcement, Office of	30, VII
Internal Revenue Service	26, I
International Boundary and Water Commission, United States and Mexico, United States Section	22, XI
International Development, United States Agency for	22, II
Federal Acquisition Regulation	48, 7
International Development Cooperation Agency, United States	22, XII
International Joint Commission, United States and Canada	22, IV
International Organizations Employees Loyalty Board	5, V
International Trade Administration	15, III; 19, III
International Trade Commission, United States	19, II
Interstate Commerce Commission	5, XL
Investment Security, Office of	31, VIII
James Madison Memorial Fellowship Foundation	45, XXIV
Japan–United States Friendship Commission	22, XVI
Joint Board for the Enrollment of Actuaries	20, VIII
Justice Department	2, XXVIII; 5, XXVIII; 28, I, XI; 40, IV
Alcohol, Tobacco, Firearms, and Explosives, Bureau of	27, II
Drug Enforcement Administration	21, II
Federal Acquisition Regulation	48, 28
Federal Claims Collection Standards	31, IX
Federal Prison Industries, Inc.	28, III
Foreign Claims Settlement Commission of the United States	45, V
Immigration Review, Executive Office for	8, V
Offices of Independent Counsel	28, VI
Prisons, Bureau of	28, V
Property Management Regulations	41, 128
Labor Department	5, XLII
Employee Benefits Security Administration	29, XXV
Employees' Compensation Appeals Board	20, IV
Employment and Training Administration	20, V

Agency	CFR Title, Subtitle or Chapter
Employment Standards Administration	20, VI
Federal Acquisition Regulation	48, 29
Federal Contract Compliance Programs, Office of	41, 60
Federal Procurement Regulations System	41, 50
Labor-Management Standards, Office of	29, II, IV
Mine Safety and Health Administration	30, I
Occupational Safety and Health Administration	29, XVII
Office of Workers' Compensation Programs	20, VII
Public Contracts	41, 50
Secretary of Labor, Office of	29, Subtitle A
Veterans' Employment and Training Service, Office of the Assistant Secretary for	41, 61; 20, IX
Wage and Hour Division	29, V
Workers' Compensation Programs, Office of	20, I
Labor-Management Standards, Office of	29, II, IV
Land Management, Bureau of	43, II
Legal Services Corporation	45, XVI
Library of Congress	36, VII
Copyright Royalty Board	37, III
U.S. Copyright Office	37, II
Local Television Loan Guarantee Board	7, XX
Management and Budget, Office of	5, III, LXXVII; 14, VI; 48, 99
Marine Mammal Commission	50, V
Maritime Administration	46, II
Merit Systems Protection Board	5, II, LXIV
Micronesian Status Negotiations, Office for	32, XXVII
Military Compensation and Retirement Modernization Commission	5, XCIX
Millennium Challenge Corporation	22, XIII
Mine Safety and Health Administration	30, I
Minority Business Development Agency	15, XIV
Miscellaneous Agencies	1, IV
Monetary Offices	31, I
Morris K. Udall Scholarship and Excellence in National Environmental Policy Foundation	36, XVI
Museum and Library Services, Institute of	2, XXXI
National Aeronautics and Space Administration	2, XVIII; 5, LIX; 14, V
Federal Acquisition Regulation	48, 18
National Agricultural Library	7, XLI
National Agricultural Statistics Service	7, XXXVI
National and Community Service, Corporation for	2, XXII; 45, XII, XXV
National Archives and Records Administration	2, XXVI; 5, LXVI; 36, XII
Information Security Oversight Office	32, XX
National Capital Planning Commission	1, IV
National Commission for Employment Policy	1, IV
National Commission on Libraries and Information Science	45, XVII
National Council on Disability	34, XII
National Counterintelligence Center	32, XVIII
National Credit Union Administration	5, LXXXVI; 12, VII
National Crime Prevention and Privacy Compact Council	28, IX
National Drug Control Policy, Office of	21, III
National Endowment for the Arts	2, XXXII
National Endowment for the Humanities	2, XXXIII
National Foundation on the Arts and the Humanities	45, XI
National Highway Traffic Safety Administration	23, II, III; 47, VI; 49, V
National Imagery and Mapping Agency	32, I
National Indian Gaming Commission	25, III
National Institute for Literacy	34, XI
National Institute of Food and Agriculture	7, XXXIV
National Institute of Standards and Technology	15, II
National Intelligence, Office of Director of	32, XVII
National Labor Relations Board	5, LXI; 29, I
National Marine Fisheries Service	50, II, IV
National Mediation Board	29, X
National Oceanic and Atmospheric Administration	15, IX; 50, II, III, IV, VI

Agency	CFR Title, Subtitle or Chapter
National Park Service	36, I
National Railroad Adjustment Board	29, III
National Railroad Passenger Corporation (AMTRAK)	49, VII
National Science Foundation	2, XXV; 5, XLIII; 45, VI
Federal Acquisition Regulation	48, 25
National Security Council	32, XXI
National Security Council and Office of Science and Technology Policy	47, II
National Telecommunications and Information Administration	15, XXIII; 47, III, IV
National Transportation Safety Board	49, VIII
Natural Resources Conservation Service	7, VI
Natural Resource Revenue, Office of	30, XII
Navajo and Hopi Indian Relocation, Office of	25, IV
Navy Department	32, VI
Federal Acquisition Regulation	48, 52
Neighborhood Reinvestment Corporation	24, XXV
Northeast Interstate Low-Level Radioactive Waste Commission	10, XVIII
Nuclear Regulatory Commission	2, XX; 5, XLVIII; 10, I
Federal Acquisition Regulation	48, 20
Occupational Safety and Health Administration	29, XVII
Occupational Safety and Health Review Commission	29, XX
Ocean Energy Management, Bureau of	30, V
Offices of Independent Counsel	28, VI
Office of Workers' Compensation Programs	20, VII
Oklahoma City National Memorial Trust	36, XV
Operations Office	7, XXVIII
Overseas Private Investment Corporation	5, XXXIII; 22, VII
Patent and Trademark Office, United States	37, I
Payment From a Non-Federal Source for Travel Expenses	41, 304
Payment of Expenses Connected With the Death of Certain Employees	41, 303
Peace Corps	2, XXXVII; 22, III
Pennsylvania Avenue Development Corporation	36, IX
Pension Benefit Guaranty Corporation	29, XL
Personnel Management, Office of	5, I, XXXV; 45, VIII
Human Resources Management and Labor Relations Systems, Department of Homeland Security	5, XCVII
Federal Acquisition Regulation	48, 17
Federal Employees Group Life Insurance Federal Acquisition Regulation	48, 21
Federal Employees Health Benefits Acquisition Regulation	48, 16
Pipeline and Hazardous Materials Safety Administration	49, I
Postal Regulatory Commission	5, XLVI; 39, III
Postal Service, United States	5, LX; 39, I
Postsecondary Education, Office of	34, VI
President's Commission on White House Fellowships	1, IV
Presidential Documents	3
Presidio Trust	36, X
Prisons, Bureau of	28, V
Privacy and Civil Liberties Oversight Board	6, X
Procurement and Property Management, Office of	7, XXXII
Productivity, Technology and Innovation, Assistant Secretary	37, IV
Public Contracts, Department of Labor	41, 50
Public and Indian Housing, Office of Assistant Secretary for	24, IX
Public Health Service	42, I
Railroad Retirement Board	20, II
Reclamation, Bureau of	43, I
Recovery Accountability and Transparency Board	4, II
Refugee Resettlement, Office of	45, IV
Relocation Allowances	41, 302
Research and Innovative Technology Administration	49, XI
Rural Business-Cooperative Service	7, XVIII, XLII, L
Rural Development Administration	7, XLII
Rural Housing Service	7, XVIII, XXXV, L

Agency	CFR Title, Subtitle or Chapter
Rural Telephone Bank	7, XVI
Rural Utilities Service	7, XVII, XVIII, XLII, L
Saint Lawrence Seaway Development Corporation	33, IV
Science and Technology Policy, Office of	32, XXIV
Science and Technology Policy, Office of, and National Security Council	47, II
Secret Service	31, IV
Securities and Exchange Commission	5, XXXIV; 17, II
Selective Service System	32, XVI
Small Business Administration	2, XXVII; 13, I
Smithsonian Institution	36, V
Social Security Administration	2, XXIII; 20, III; 48, 23
Soldiers' and Airmen's Home, United States	5, XI
Special Counsel, Office of	5, VIII
Special Education and Rehabilitative Services, Office of	34, III
State Department	2, VI; 22, I; 28, XI
Federal Acquisition Regulation	48, 6
Surface Mining Reclamation and Enforcement, Office of	30, VII
Surface Transportation Board	49, X
Susquehanna River Basin Commission	18, VIII
Technology Administration	15, XI
Technology Policy, Assistant Secretary for	37, IV
Tennessee Valley Authority	5, LXIX; 18, XIII
Thrift Supervision Office, Department of the Treasury	12, V
Trade Representative, United States, Office of	15, XX
Transportation, Department of	2, XII; 5, L
Commercial Space Transportation	14, III
Contract Appeals, Board of	48, 63
Emergency Management and Assistance	44, IV
Federal Acquisition Regulation	48, 12
Federal Aviation Administration	14, I
Federal Highway Administration	23, I, II
Federal Motor Carrier Safety Administration	49, III
Federal Railroad Administration	49, II
Federal Transit Administration	49, VI
Maritime Administration	46, II
National Highway Traffic Safety Administration	23, II, III; 47, IV; 49, V
Pipeline and Hazardous Materials Safety Administration	49, I
Saint Lawrence Seaway Development Corporation	33, IV
Secretary of Transportation, Office of	14, II; 49, Subtitle A
Surface Transportation Board	49, X
Transportation Statistics Bureau	49, XI
Transportation, Office of	7, XXXIII
Transportation Security Administration	49, XII
Transportation Statistics Bureau	49, XI
Travel Allowances, Temporary Duty (TDY)	41, 301
Treasury Department	5, XXI; 12, XV; 17, IV; 31, IX
Alcohol and Tobacco Tax and Trade Bureau	27, I
Community Development Financial Institutions Fund	12, XVIII
Comptroller of the Currency	12, I
Customs and Border Protection	19, I
Engraving and Printing, Bureau of	31, VI
Federal Acquisition Regulation	48, 10
Federal Claims Collection Standards	31, IX
Federal Law Enforcement Training Center	31, VII
Financial Crimes Enforcement Network	31, X
Fiscal Service	31, II
Foreign Assets Control, Office of	31, V
Internal Revenue Service	26, I
Investment Security, Office of	31, VIII
Monetary Offices	31, I
Secret Service	31, IV
Secretary of the Treasury, Office of	31, Subtitle A
Thrift Supervision, Office of	12, V
Truman, Harry S. Scholarship Foundation	45, XVIII
United States and Canada, International Joint Commission	22, IV

Agency	CFR Title, Subtitle or Chapter
United States and Mexico, International Boundary and Water Commission, United States Section	22, XI
U.S. Copyright Office	37, II
Utah Reclamation Mitigation and Conservation Commission	43, III
Veterans Affairs Department	2, VIII; 38, I
Federal Acquisition Regulation	48, 8
Veterans' Employment and Training Service, Office of the Assistant Secretary for	41, 61; 20, IX
Vice President of the United States, Office of	32, XXVIII
Vocational and Adult Education, Office of	34, IV
Wage and Hour Division	29, V
Water Resources Council	18, VI
Workers' Compensation Programs, Office of	20, I
World Agricultural Outlook Board	7, XXXVIII

Table of OMB Control Numbers

The OMB control numbers for chapter I of title 47 are consolidated into § 0.408. For the convenience of the user, § 0.408 is reprinted below.

§ 0.408 OMB control numbers and expiration dates assigned pursuant to the Paperwork Reduction Act of 1995.

(a) *Purpose*. This section displays the OMB control numbers and expiration dates for the Commission information collection requirements assigned by the Office of Management and Budget (''OMB'') pursuant to the Paperwork Reduction Act of 1995, Public Law 104–13. The Commission intends that this section comply with the requirement that agencies ''display'' current control numbers and expiration dates assigned by the Director, OMB, for each approved information collection requirement. Notwithstanding any other provisions of law, no person shall be subject to any penalty for failing to comply with a collection of information subject to the Paperwork Reduction Act (PRA) that does not display a currently valid OMB control number. Questions concerning the OMB control numbers and expiration dates should be directed to the Associate Managing Director—Performance Evaluation and Records Management, (''AMD–PERM''), Office of Managing Director, Federal Communications Commission, Washington, DC 20554 by sending an email to *Judith-B.Herman@fcc.gov*.

(b) *Display*.

OMB Control No.	FCC form number or 47 CFR section or part, docket number or title identifying the collection	OMB expiration date
3060–0004	Secs. 1.1307 and 1.1311, Guidelines for Evaluating the Environmental Effects of Radiofrequency Radiation, ET Docket No. 93–62.	05/31/14
3060–0009	FCC 316	05/31/13
3060–0010	FCC 323	10/31/12
3060–0016	FCC 346	03/31/14
3060–0017	FCC 347	11/30/14
3060–0027	FCC 301	04/30/15
3060–0029	FCC 340	07/31/14
3060–0031	FCC 314 and FCC 315	05/31/13
3060–0053	FCC 702 and FCC 703	07/31/14
3060–0055	FCC 327	02/28/15
3060–0056	Part 68—Connection of Terminal Equipment to the Telephone Network	03/31/14
3060–0057	FCC 731	03/31/14
3060–0059	FCC 740	03/31/13
3060–0061	FCC 325	06/30/14
3060–0065	FCC 442	06/30/14
3060–0075	FCC 345	04/30/15
3060–0076	FCC 395	09/30/13
3060–0084	FCC 323–E	01/31/14
3060–0093	FCC 405	10/31/14
3060–0095	FCC 395–A	08/31/14
3060–0106	Sec. 43.61, Part 43, Reporting Requirements for U.S. Providers of International Telecommunications Services and Affiliates.	10/31/14
3060–0110	FCC 303–S	02/28/14
3060–0113	FCC 396	04/30/15
3060–0120	FCC 396–A	06/30/15
3060–0126	Sec. 73.1820	09/30/14
3060–0132	FCC 1068A	05/31/15
3060–0139	FCC 854	04/30/15
3060–0147	Sec. 64.804	09/30/14
3060–0149	Part 63, Section 214, Secs. 63.01, 63.602; 63.50, 63.51, 63.52, 63.53; 63.61, 63.62, 63.63; 63.65, 63.66; 63.71; 63.90; 63.500, 63.501; 63.504, 63.505 and 63.601.	12/31/12
3060–0157	Sec. 73.99	08/31/14
3060–0161	Sec. 73.61	01/31/15
3060–0166	Part 42, Secs. 42.4, 42.5, 42.6 and 42.7	09/30/13
3060–0168	Sec. 43.43	09/30/12

OMB Control No.	FCC form number or 47 CFR section or part, docket number or title identifying the collection	OMB expiration date
3060–0169	Sec. 43.51	10/31/14
3060–0170	Sec. 73.1030	08/31/13
3060–0171	Sec. 73.1125	08/31/13
3060–0174	Secs. 73.1212, 76.1615, and 76.1715	06/30/15
3060–0175	Sec. 73.1250	03/31/14
3060–0176	Sec. 73.1510	08/31/14
3060–0178	Sec. 73.1560	06/30/14
3060–0179	Sec. 73.1590	09/30/13
3060–0180	Sec. 73.1610	07/31/13
3060–0182	Sec. 73.1620	02/28/13
3060–0185	Sec. 73.3613	11/30/13
3060–0188	Call Sign Reservation and Authorization System	08/31/13
3060–0190	Sec. 73.3544	10/31/12
3060–0192	Sec. 87.103	10/31/13
3060–0202	Sec. 87.37	04/30/15
3060–0204	Sec. 90.20(a)(2)(v) and 90.20(a)(2)(xi)	10/31/14
3060–0207	Part 11—Emergency Alert System (EAS)	02/28/15
3060–0208	Sec. 73.1870	02/28/15
3060–0213	Sec. 73.3525	02/28/15
3060–0214	Secs. 73.3526 and 73.3527; Secs. 76.1701 and 73.1943	06/30/15
3060–0216	Secs. 73.3538 and 73.1690(e)	11/30/13
3060–0221	Sec. 90.155	01/31/14
3060–0222	Sec. 97.213	06/30/15
3060–0223	Sec. 90.129	09/30/14
3060–0228	Sec. 80.59 and FCC 806, 824, 827 and 829	07/31/13
3060–0233	Part 36—Separations	11/30/12
3060–0236	Sec. 74.703	03/31/14
3060–0248	Sec. 74.751	11/30/13
3060–0249	Secs. 74.781, 74.1281, and 78.69	04/30/15
3060–0250	Secs. 73.1207, 74.784 and 74.1284	08/31/12
3060–0259	Sec. 90.263	08/31/12
3060–0261	Sec. 90.215	07/31/13
3060–0262	Sec. 90.179	04/30/14
3060–0264	Sec. 80.413	08/31/12
3060–0265	Sec. 80.868	05/31/13
3060–0270	Sec. 90.443	01/31/13
3060–0281	Sec. 90.651	05/31/13
3060–0286	Sec. 80.302	02/28/13
3060–0288	Sec. 78.33	07/31/14
3060–0289	Secs. 76.601, 76.1704, 76.1705, and 76.1717	05/31/14
3060–0290	Sec. 90.517	03/31/14
3060–0291	Sec. 90.477(a), (b)(2), (d)(2) and (d)(3)	07/31/14
3060–0292	Part 69 and Sec. 69.605	02/28/13
3060–0295	Sec. 90.607(b)(1) and (c)(1)	04/30/13
3060–0297	Sec. 80.503	08/31/12
3060–0298	Part 61, Tariffs (Other than Tariff Review Plan)	05/31/15
3060–0307	Parts 1, 22 and 90 Rules to Facilitate Development of SMR Systems in the 800 MHz Frequency Band.	01/31/13
3060–0308	Sec. 90.505	04/30/13
3060–0310	Sec. 76.1801 and FCC 322	01/31/15
3060–0311	Sec. 76.54	03/31/14
3060–0316	Secs. 76.1700, 76.1702, 76.1703, 76.1704, 76.1707, and 76.1711	12/31/13
3060–0320	Sec. 73.1350	11/30/12
3060–0325	Sec. 80.605	08/31/14
3060–0329	Sec. 2.955	01/31/15
3060–0331	FCC 321	01/31/15
3060–0332	Secs. 76.614 and 76.1706	08/31/13
3060–0340	Sec. 73.51	10/31/12
3060–0341	Sec. 73.1680	01/31/15
3060–0346	Sec. 78.27	10/31/12
3060–0347	Sec. 97.311	09/30/14
3060–0349	Secs. 73.2080, 76.73, 76.75, 76.79, and 76.1702	12/31/12
3060–0355	FCC 492 and FCC 492A	05/31/13
3060–0357	Sec. 63.701	02/28/14
3060–0360	Sec. 80.409	01/31/14
3060–0370	Part 32—Uniform System of Accounts for Telecommunications Companies	01/31/14
3060–0384	Secs. 64.901, 64.904 and 64.905	12/31/13
3060–0386	Secs. 1.5, 73.1615, 73.1635, 73.1740, 73.3598, 74.788, and FCC 337	11/30/14
3060–0387	Secs. 15.201(d), 15.209, 15.211, 15.213 and 15.221	05/31/15
3060–0390	FCC 395–B	09/30/14
3060–0391	Parts 54 and 36, Program to Monitor the Impacts of the Universal Service Support Mechanisms.	03/31/14
3060–0392	47 CFR Part 1, Subpart J, Pole Attachment Complaint Procedures	12/31/12

OMB Control No.	FCC form number or 47 CFR section or part, docket number or title identifying the collection	OMB expiration date
3060–0394	Sec. 1.420	04/30/14
3060–0395	FCC Reports 43–02, FCC 43–05 and FCC 43–07	09/30/14
3060–0398	Secs. 2.948 and 15.117(g)(2)	09/30/13
3060–0400	Tariff Review Plan (TRP)	05/31/15
3060–0404	FCC 350	11/30/13
3060–0405	FCC 349	04/30/13
3060–0410	FCC 495A and FCC 495B	09/30/14
3060–0411	FCC 485	09/30/14
3060–0414	Terrain Shielding Policy	10/31/12
3060–0419	Secs. 76.94, 76.95, 76.105, 76.106, 76.107, and 76.1609	06/30/14
3060–0422	Sec. 68.5	08/31/13
3060–0423	Sec. 73.3588	04/30/14
3060–0430	Sec. 1.1206	12/31/14
3060–0433	FCC 320	05/31/14
3060–0434	Sec. 90.20(e)(6)	07/31/14
3060–0439	Sec. 64.201	09/30/13
3060–0441	Secs. 90.621 and 90.693	08/31/12
3060–0454	Secs. 43.51, 64.1001 and 64.1002	06/30/14
3060–0463	Telecommunications Relay Services and Speech-to-Speech Services for Individuals with Hearing and Speech Disabilities, Report and Order and Declaratory Ruling, CG Doc. No. 03–123, FCC 07–186.	06/30/14
3060–0466	Secs. 73.1201, 74.783 and 74.1283	10/31/13
3060–0470	Secs. 64.901 and 64.903, and RAO Letters 19 and 26	06/30/14
3060–0473	Sec. 74.1251	05/31/14
3060–0474	Sec. 74.1263	09/30/14
3060–0484	Secs. 4.1 and 4.2 and Part 4 of the Commission's Rules Concerning Disruptions to Communications (NORS).	02/28/14
3060–0489	Sec. 73.37	06/30/15
3060–0496	FCC Report 43–08	04/30/13
3060–0500	Sec. 76.1713	08/31/13
3060–0501	Secs. 73.1942, 76.206 and 76.1611	10/31/14
3060–0506	FCC 302–FM	11/30/14
3060–0508	Part 1 and Part 22 Reporting and Recordkeeping Requirements	09/30/14
3060–0511	FCC Report 43–04	11/30/14
3060–0512	FCC Report 43–01	04/30/15
3060–0519	Rules and Regulations Implementing the Telephone Consumer Protection Act (TCPA) of 1991, Order, CG Docket No. 02–278.	10/31/14
3060–0526	Sec. 69.123, Density Pricing Zone Plans, Expanded Interconnection with Local Telephone Company Facilities.	05/31/14
3060–0531	Secs. 101.1011, 101.1325(b), 101.1327(a), 101.527, 101.529, and 101.103	01/31/13
3060–0532	Secs. 2.1033 and 15.121	08/31/14
3060–0537	Sec. 13.217	03/31/14
3060–0546	Sec. 76.59	09/30/14
3060–0548	Secs. 76.1708, 76.1709, 76.1620, 76.56 and 76.1614	06/30/14
3060–0550	FCC 328	05/31/14
3060–0560	Sec. 76.911	05/31/13
3060–0562	Sec. 76.916	12/31/12
3060–0565	Sec. 76.944	03/31/15
3060–0568	Secs. 76.970, 76.971 and 76.975	04/30/15
3060–0569	Sec. 76.975	01/31/15
3060–0572	Secs. 43.82, International Circuit Status Reports	10/31/14
3060–0573	FCC 394	02/28/15
3060–0580	Sec. 76.1710	11/30/12
3060–0584	FCC 44 and FCC 45	03/31/15
3060–0589	FCC 159, FCC 159–B, FCC 159–C, FCC 159–E and 159–W	03/31/14
3060–0594	FCC 1220	05/31/13
3060–0599	Secs. 90.647 and 90.425	02/28/13
3060–0600	Application to Participate in a FCC Auction	09/30/12
3060–0601	FCC 1200	05/31/13
3060–0607	Sec. 76.922	01/31/15
3060–0609	Sec. 76.934(e)	06/30/13
3060–0625	Sec. 24.103	04/30/13
3060–0626	Sec. 90.483	01/31/14
3060–0627	FCC 302–AM	11/30/14
3060–0633	Secs. 73.1230, 74.165, 74.432, 74.564, 74.664, 74.765, 74.832 and 74.1265.	08/31/13
3060–0634	Sec. 73.691	11/30/12
3060–0636	Secs. 2.906, 2.909, 2.1071, 2.1075, 2.1076, 2.1077 and 15.37	05/31/15
3060–0645	Secs. 17.4, 17.48 and 17.49	04/30/15
3060–0647	Cable Price Survey and Supplemental Questions and FCC 333	08/31/13
3060–0649	Secs. 76.1601, 76.1617, 76.1697 and 76.1708	08/31/13
3060–0652	Secs. 76.309, 76.1602, 76.160 and 76.1619	07/31/14
3060–0653	Sec. 64.703(b) and (c)	03/31/14

OMB Control No.	FCC form number or 47 CFR section or part, docket number or title identifying the collection	OMB expiration date
3060–0655	Requests for Waivers of Regulatory and Application Fees	07/31/13
3060–0665	Sec. 64.707	10/31/13
3060–0667	Secs. 76.630, 76.1621 and 76.1622	03/31/14
3060–0668	Sec. 76.936	09/30/13
3060–0669	Sec. 76.946	11/30/13
3060–0674	Sec. 76.1618	06/30/14
3060–0678	Part 25 of the Commission's Rules Governing the Licensing of, and Spectrum Usage by, Satellite Network Stations and Space Stations.	09/30/13
3060–0685	FCC 1210 and FCC 1240	12/31/14
3060–0686	Secs. 63.10, 63.11, 63.13, 63.18, 63.19, 63.21, 63.24, 63.25 and 1.1311, International Section 214 Process and Tariff Requirements and FCC 214, FCC 214TC and FCC 214STA.	02/28/14
3060–0687	Access to Telecommunications Equipment and Services by Persons with Disabilities, CC Docket No. 87–124.	05/31/15
3060–0688	FCC 1235	08/31/13
3060–0690	Sec. 101.17	04/30/15
3060–0691	Sec. 90.665	07/31/13
3060–0692	Secs. 76.613, 76.802 and 76.804	02/28/13
3060–0695	Sec. 87.219	10/31/14
3060–0698	Secs. 25.203(i) and 73.1030(a)(2), Radio Astronomy Coordination Zone in Puerto Rico.	03/31/14
3060–0700	FCC 1275	07/31/13
3060–0703	FCC 1205	01/31/15
3060–0704	Secs. 42.10, 42.11 and 64.1900 and Section 254(g), Policy and Rule Concerning the Interstate, Interexchange Marketplace.	09/30/14
3060–0706	Secs. 76.952 and 76.990, Cable Act Reform	06/30/14
3060–0707	Over-the Air Reception Devices (OTARD)	03/31/14
3060–0710	Policy and Rules Under Parts 1 and 51 Concerning the Implementation of the Local Competition Provisions in the Telecommunications Act of 1996—CC Docket No. 96–98.	07/31/13
3060–0713	Alternative Broadcast Inspection Program (ABIP) Compliance Notification	04/30/14
3060–0715	Telecommunications Carriers' Use of Customer Proprietary Network Information (CPNI) and Other Customer Information—CC Docket No. 96–115.	07/31/14
3060–0716	Secs. 73.88, 73.718, 73.685 and 73.1630	04/30/15
3060–0717	Secs. 64.703(a), 64.709 and 64.710	06/30/14
3060–0718	Part 101 Rule Sections Governing the Terrestrial Microwave Fixed Radio Service.	04/30/15
3060–0719	Quarterly Report of IntraLATA Carriers Listing Payphone Automatic Number Identifications (ANIs).	03/31/13
3060–0723	47 U.S.C. Section 276, Public Disclosure of Network Information by Bell Operating Companies (BOCs).	10/31/12
3060–0725	Quarterly Filing of Nondiscrimination Reports (on Quality of Service, Installation, and Maintenance) by Bell Operating Companies (BOC's).	05/31/15
3060–0727	Sec. 73.213	10/31/12
3060–0734	Secs. 53.209, 53.211 and 53.213	08/31/14
3060–0737	Disclosure Requirements for Information Services Provided Under a Presubscription or Comparable Arrangement.	01/31/15
3060–0740	Sec. 95.1015	10/31/14
3060–0741	Implementation of the Local Competition Provisions on the Telecommunications Act of 1996—CC Docket No. 96–98.	01/31/14
3060–0742	Secs. 52.21, 52.22, 52.23, 52.24, 52.25, 52.26, 52.27, 52.28, 52.29, 52.30, 52.31, 52.32, 52.33, 52.34, 52.35 and 52.36; and CC Docket No. 95–116.	07/31/13
3060–0743	Implementation of the Pay Telephone Reclassification and Compensation Provisions of the Telecommunications Act of 1996—CC Docket No. 96–128.	02/28/13
3060–0745	Implementation of the Local Exchange Carrier Tariff Streamlining Provisions of the Telecommunications Act of 1996, CC Docket No. 96–187.	10/31/12
3060–0748	Secs. 64.1504, 64.1509 and 64.1510, Pay-Per-Call and Other Information Services.	04/30/13
3060–0750	Secs. 73.671 and 73.673	06/30/14
3060–0751	Sec. 43.51	08/31/14
3060–0754	FCC 398	04/30/15
3060–0755	Secs. 59.1, 59.2, 59.3 and 59.4	01/31/15
3060–0758	Secs. 5.55, 5.61, 5.75, 5.85, and 5.93, Experimental Radio Service Regulations, ET Docket No. 96–256.	04/30/13
3060–0760	272 Sunset Order; WC Docket No. 06–120; Access Charge Reform, CC Docket No. 96–262, First Report and Order; Second Order on Reconsideration and Memorandum Opinion and Order; and Fifth Report and Order.	09/30/14
3060–0761	Sec. 79.1	Pending OMB review and approval.
3060–0763	FCC Report 43–06	02/28/15

OMB Control No.	FCC form number or 47 CFR section or part, docket number or title identifying the collection	OMB expiration date
3060–0767	Secs. 1.2110, 1.2111 and 1.2112, Auction and Licensing Disclosures—Ownership and Small Business Status.	06/30/14
3060–0768	28 GHz Band Segmentation Plan Amending the Commission's Rules to Redesignate the 27.5–29.5 GHz Frequency Band, to Reallocate the 29.5–30.0 GHz Frequency Band, and to Establish Rules and Policies.	08/31/14
3060–0770	Secs. 1.774, 61.49, 61.55, 61.58, 69.4, 69.707, 69.713 and 69.729	10/31/14
3060–0773	Sec. 2.803	12/31/12
3060–0774	Parts 36 and 54, Federal-State Joint Board on Universal Service	06/30/14
3060–0775	Sec. 64.1903	04/30/13
3060–0779	Secs. 90.20(a)(1)(iii), 90.769, 90.767, 90.763(b)(l)(i)(a), 90.763(b)(l)(i)(B), 90.771(b) and 90.743, Rules for Use of the 220 MHz Band by the Private Land Mobile Radio Service (PLMRS).	11/30/13
3060–0782	Petition for Limited Modification of LATA Boundaries to Provide Expanded Local Calling Service (ELCS) at Various Locations.	11/30/12
3060–0783	Sec. 90.176	01/31/15
3060–0787	Implementation of Subscriber Carrier Selection Changes Provisions of the Telecommunications Act of 1996; Policies and Rules Concerning Unauthorized Changes of Consumers' Long Distance Carriers.	07/31/14
3060–0788	DTV Showings/Interference Agreements	10/31/13
3060–0790	Sec. 68.110(c)	09/30/12
3060–0791	Sec. 32.7300	09/30/12
3060–0795	FCC 606	08/31/14
3060–0798	FCC 601	04/30/15
3060–0799	FCC 602	09/30/13
3060–0800	FCC 603	02/28/14
3060–0804	FCC 465, FCC 466, FCC 466–A and FCC 467	11/30/14
3060–0805	Secs. 90.523, 90.527, 90.545 and 90.1211	07/31/14
3060–0806	FCC 470 and FCC 471	10/31/13
3060–0807	Sec. 51.803 and Supplemental Procedures for Petitions to Section 252(e)(5) of the Communications Act of 1934, as amended.	07/31/13
3060–0809	Communications Assistance for Law Enforcement Act (CALEA)	02/28/14
3060–0812	Exemption from Payment of Regulatory Fees When Claiming Non-Profit Status.	12/31/14
3060–0813	Sec. 20.18, Enhanced 911 Emergency Calling Systems	02/28/15
3060–0814	Sec. 54.301, Local Switching Support and Local Switching Support Data Collection Form and Instructions.	12/31/13
3060–0816	FCC 477	04/30/13
3060–0817	Computer III Further Remand Proceedings: BOC Provision of Enhanced Services (ONA Requirements), CC Docket No. 95–20.	06/30/15
3060–0819	Secs. 54.400–54.707 and FCC 497	10/31/12
3060–0823	Part 64, Pay Telephone Reclassification	03/31/14
3060–0824	FCC 498	11/30/12
3060–0833	Implementation of Section 255 of the Telecommunications Act of 1996: Complaint Filings.	05/31/14
3060–0835	FCC 806, FCC 824, FCC 827 and FCC 829	09/30/12
3060–0837	FCC 302–TV	04/30/13
3060–0844	Carriage of the Transmissions of Digital Television Broadcast Stations	10/31/13
3060–0848	Deployment of Wireline Services Offering Advanced Telecommunications Capability—CC Docket No. 98–147.	02/28/15
3060–0849	Commercial Availability of Navigation Devices	07/31/14
3060–0850	FCC 605	06/30/14
3060–0853	FCC 479, FCC 486 and FCC 500	10/31/13
3060–0854	Truth-in-Billing Format, CC Docket No. 98–170 and CG Docket No. 04–208.	09/30/14
3060–0855	FCC 499–A and FCC 499–Q	10/31/14
3060–0856	FCC 472, FCC 473 and FCC 474	06/30/13
3060–0859	Public Notice—Suggested Guidelines for Petitions for Ruling under Section 253 of the Telecommunications Act.	05/31/15
3060–0862	Handling Confidential Information	07/31/14
3060–0863	Satellite Delivery of Network Signals to Unserved Households for Purposes of the Satellite Home Viewer Act (SHVA).	06/30/14
3060–0865	Wireless Telecommunications Bureau Universal Licensing System Recordkeeping and Third-Party Disclosure Requirements.	08/31/13
3060–0874	FCC 475B, FCC 501, FCC 2000 Series A–F, FCC 1088A, B, C, D, E, F, and H.	Pending OMB review and approval.
3060–0876	Sec. 54.703 and Secs. 54.719, 54.720, 54.721, 54.722, 54.723, 54.724 and 54.725.	10/31/12
3060–0881	Sec. 95.861	07/31/14
3060–0882	Sec. 95.833	10/31/14
3060–0888	Secs. 1.221, 1.229, 1.248, 76.7, 76.9, 76.61, 76.914, 76.1001, 76.1003, 76.1302 and 76.1513.	01/31/15
3060–0895	Sec. 52.15, CC Docket No. 99–200 and FCC 502	06/30/13
3060–0896	Broadcast Auction Form Exhibits	10/31/14

OMB Control No.	FCC form number or 47 CFR section or part, docket number or title identifying the collection	OMB expiration date
3060–0905	Sec. 18.213	08/31/14
3060–0906	FCC 317 and Sec. 73.624(g)	11/30/14
3060–0910	Third Report and Order in CC Docket No. 94–102 to Ensure Compatibility with Enhanced 911 Emergency Calling Systems.	09/30/12
3060–0912	Secs. 76.501, 76.503 and 76.504, Cable Attribution Rules	03/31/15
3060–0917	FCC 160	05/31/13
3060–0918	FCC 161	05/31/13
3060–0920	FCC 318	05/31/14
3060–0922	FCC 397	03/31/15
3060–0927	Auditor's Annual Independence and Objectivity Certification	02/28/15
3060–0928	FCC 302–CA	10/31/12
3060–0931	Sec. 80.103, Digital Selective Calling (DSC) Operating Procedures; Maritime Mobile Services Identity (MMSI).	07/31/12
3060–0932	FCC 301–CA and Sec. 74.793(d)	11/30/13
3060–0936	Secs. 95.1215 and 95.1217	06/30/15
3060–0937	Establishment of a Class A Television Service, MM Docket No. 00–10	07/31/13
3060–0938	FCC 319	02/28/15
3060–0942	Access Charge Reform, Price Cap Performance Review for Local Exchange Carriers, Low-Volume Long Distance Users, Federal-State Joint Board on Universal Service.	06/30/13
3060–0944	Secs. 1.767 and 1.768,; Executive Order (E.O.) 10530, Cable Landing License Act; FCC 220.	02/28/14
3060–0950	Bidding Credits for Tribal Lands	08/31/13
3060–0951	Sec. 1.1204(b) Note, and Sec. 1.1206(a) Note 1	03/31/13
3060–0952	Proposed Demographic Information and Notifications, Second FNPRM, CC Docket Nos. 98–147.	03/31/13
3060–0953	Secs. 95.1111 and 95.1113	05/31/13
3060–0955	Secs. 25.114, 25.115, 25.133, 25.137, 25.143, 25.203, and 25.279; 2 GHz Mobile Satellite Service Reports.	01/31/13
3060–0957	Sec. 20.18(i) and (g)	12/31/13
3060–0960	Secs. 76.122, 76.123, 76.124 and 76.127	03/31/14
3060–0962	Redesignation of the 18 GHz Frequency Band, Blanket Licensing of Satellite Earth Stations in the Ka-Band, and the Allocation of Additional Spectrum for Broadcast Satellite Service Use.	08/31/14
3060–0967	Sec. 79.2	08/31/13
3060–0971	Sec. 52.15	02/28/14
3060–0972	FCC 507, FCC 508 and FCC 509, Multi-Association Group (MAG) Plan Order, Parts 54 and 69 Filing Requirements for Regulation of Interstate Services of Non-Price Cap Incumbent LECs and Interexchange Carriers.	02/28/14
3060–0973	Sec. 64.1120(e)	09/30/13
3060–0975	Secs. 68.3 and 1.4000	11/30/13
3060–0979	License Audit Letter	01/31/13
3060–0980	Sec. 76.66, Implementation of the Satellite Home Viewer Extension and Reauthorization Act of 1999; (SHVERA) Rules, Local Broadcast Signal Carriage Issues, Retransmission Consent Issues.	07/31/14
3060–0984	Secs. 90.35(b)(2) and 90.175(b)(1)	01/31/14
3060–0986	FCC 525	04/30/15
3060–0987	Sec. 20.18(l)(1)(i–iii) and 20.18(l)(2)(i–iii), 911 Callback Capability; Non-initialized Handsets.	09/30/14
3060–0989	Secs. 63.01, 63.03 and 63.04	07/31/14
3060–0991	AM Measurement Data	01/31/15
3060–0992	Sec. 54.507(d)(1)–(4)	09/30/13
3060–0994	Flexibility for Delivery of Communications by Mobile Satellite Service Providers in the 2 GHz Band, the L-Band, and the 1.6/2.4 GHz Band.	02/28/13
3060–0995	Sec. 1.2105(c)	01/31/14
3060–0996	AM Auction Section 307(b) Submissions	07/31/14
3060–0997	Sec. 52.15(k)	04/30/14
3060–0998	Sec. 87.109	07/31/13
3060–0999	Sec. 20.19 and Hearing Aid Compatibility Status Report	12/31/13
3060–1000	Sec. 87.147	12/31/13
3060–1003	Communications Disaster Information Reporting System (DIRS)	06/30/15
3060–1004	Commission Rules to Ensure Compatibility with Enhanced 911 Emergency Calling Systems.	08/31/12
3060–1005	Numbering Resource Optimization—Phase 3	05/31/14
3060–1008	Secs. 27.50 and 27.602	09/30/14
3060–1013	Mitigation of Orbital Debris	02/28/14
3060–1014	Ku-Band NGSO FSS	12/31/14
3060–1015	Ultra Wideband Transmission Systems Operating Under Part 15	01/31/15
3060–1021	Sec. 25.139	03/31/14
3060–1022	Secs. 101.1403, 101.103(f), 101.1413, 101.1440 and 101.1417	08/31/14
3060–1028	International Signaling Point Code (ISPC)	02/28/14
3060–1029	Data Network Identification Code (DNIC)	02/28/14
3060–1030	Service Rules for Advanced Wireless Services (AWS) in the 1.7 GHz and 2.1 GHz Bands.	06/30/13

OMB Control No.	FCC form number or 47 CFR section or part, docket number or title identifying the collection	OMB expiration date
3060–1031	Commission's Initiative to Implement Enhanced 911 (E911) Emergency Services.	10/31/12
3060–1033	FCC 396–C	02/28/13
3060–1034	Digital Audio Broadcasting Systems and Their Impact on the Terrestrial Radio Broadcast Service and FCC 335–AM, FCC 335–FM.	06/30/13
3060–1035	FCC 309, FCC 310 and FCC 311, Part 73, Subpart F, International Broadcast Stations.	01/31/15
3060–1039	FCC 620 and FCC 621	09/30/14
3060–1042	Request for Technical Support—Help Request Form	08/31/13
3060–1043	Telecommunications Relay Services and Speech-to-Speech Services for Individuals with Hearing and Speech Disabilities, Report and Order, CC Docket No. 98–67; FCC 04–137.	03/31/14
3060–1044	Review of the Section 251 Unbundling Obligations of Incumbent Local Exchange Carriers, CC Docket No. 01–338, and WC Docket No. 04–313, FCC 04–290, Order on Remand.	04/30/13
3060–1045	FCC 324 and Sec. 76.1610	02/28/15
3060–1046	Part 64, Pay Telephone Reclassification and Compensation Provisions of the Telecommunications Act of 1996.	06/30/14
3060–1047	Telecommunications Relay Services and Speech-to-Speech Services for Individuals with Hearing and Speech Disabilities, Report and Order, FCC 03–112.	01/31/15
3060–1048	Sec. 1.929(c)(1)	02/28/13
3060–1050	Sec. 97.303	10/31/13
3060–1053	Sec. 64.604, Telecommunications Relay Services, and Speech-to-Speech Services for Individuals with Hearing and Speech Disabilities, Two-Line Captioned Telephone Order.	04/30/13
3060–1054	FCC 422–IB	02/28/13
3060–1056	FCC 421–IB	01/31/13
3060–1057	FCC 420–IB	01/31/13
3060–1058	FCC 608	01/31/14
3060–1059	Global Mobile Personal Communications by Satellite (GMPCS)/E911 Call Centers.	11/30/13
3060–1060	Wireless E911 Coordination Initiative Letter to State 911 Coordinators	11/30/13
3060–1061	Earth Stations on Board Vessels (ESVs)	12/31/12
3060–1062	Schools and Libraries Universal Service Support Mechanism—Notification of Equipment Transfers.	06/30/13
3060–1063	Global Mobile Personal Communications by Satellite (GMPCS) Authorization, Marketing and Importation Rules.	02/28/13
3060–1064	Regulatory Fee Assessment True-Ups	06/30/14
3060–1066	FCC 312–R and Secs. 25.121(e) and 25.131(h)	02/28/13
3060–1067	FCC 312–EZ	03/31/13
3060–1069	Rules and Policies Concerning Attribution of Joint Sales Agreements in Local Television Markets, NPRM, MB Docket No. 94–256, FCC 04–173.	05/31/13
3060–1070	Sec. 101.1523 and Allocation and Service Rules for the 71–76 GHz, 81–86 GHz and 92–95 GHz Bands.	10/31/14
3060–1078	Rules and Regulations Implementing the Controlling the Assault of Non-Solicited Pornography and Marketing Act of 2003 (CAN–SPAM Act), CG Docket No. 04–53.	11/30/13
3060–1079	Sec. 15.240, Radio Frequency Identification Equipment (RFID)	02/28/14
3060–1080	Improving Public Safety Communications in the 800 MHz Band; TA–13.1 and TA–14.1.	09/30/14
3060–1081	Secs. 54.202, 54.209, 54.307, 54.313, 54.314 and 54.809	07/31/14
3060–1084	Rules and Regulations Implementing Minimum Customer Account Record Obligations on All Local and Interexchange Carriers (CARE), CG Docket No. 02–386.	06/30/13
3060–1085	Sec. 9.5, Interconnected Voice Over Internet Protocol (VoIP) E911 Compliance.	06/30/15
3060–1086	Secs. 74.786, 74.787, 74.790, 74.794 and 74.796	08/31/14
3060–1087	Sec. 15.615	06/30/14
3060–1088	Rules and Regulations Implementing the Telephone Consumer Protection Act (TCPA) of 1991, CG Docket No. 05–338, FCC 06–42.	05/31/13
3060–1089	Telecommunications Relay Services and Speech-to-Speech Services for Individuals with Hearing and Speech Disabilities, E911 Requirements for IP–Enabled Service.	12/31/13
3060–1092	FCC 609–T and FCC 611–T	01/31/14
3060–1094	Secs. 27.14 and 27.1221	03/31/14
3060–1095	Surrenders of Authorizations for International Carrier, Space Station and Earth Station Licensees.	01/31/15
3060–1096	Prepaid Calling Card Service Provider Certification, WC Docket No. 05–68	04/30/13
3060–1097	Service Rules and Policies for the Broadcasting Satellite Service (BSS)	11/30/14
3060–1100	Sec. 15.117(k)	06/30/13
3060–1101	Children's Television Requests for Preemption Flexibility	04/30/13
3060–1103	Sec. 76.41	06/30/13

OMB Control No.	FCC form number or 47 CFR section or part, docket number or title identifying the collection	OMB expiration date
3060–1104	Sec. 83.682(d)	03/31/14
3060–1105	FCC 387	03/31/14
3060–1106	Licensing and Service Rules for Vehicle Mounted Earth Stations (VMES)	12/31/12
3060–1108	Consummations of Assignments and Transfers of Control of Authorization	06/30/13
3060–1110	Sunset of the Cellular Radiotelephone Service Analog Service Requirement and Related Matters, FCC 07–103.	10/31/13
3060–1111	Secs. 225 and 255, Interconnected Voice Over Internet Protocol (VoIP) Services.	04/30/14
3060–1112	Comprehensive Review of the Universal Service Fund Management, Administration, and Oversight.	11/30/13
3060–1113	Commercial Mobile Alert System (CMAS)	07/31/14
3060–1115	DTV Consumer Education Initiative; Sec. 73.674, and FCC 388	09/30/12
3060–1116	Submarine Cable Reporting	12/31/14
3060–1120	Service Quality Measurement Plan for Interstate Special Access and Monthly Usage Reporting Requirements (272 Sunset Rulemaking).	09/30/14
3060–1122	Preparation of Annual Reports to Congress for the Collection & Expenditure of Fees or Charges for Enhanced 911 (E911) Services under the NET 911 Improvement Act of 2008.	05/31/15
3060–1124	Sec. 80.231	01/31/15
3060–1126	Sec. 10.350	06/30/15
3060–1127	First Responder Emergency Contact Information in the Universal Licensing System (ULS).	03/31/13
3060–1128	National Broadband Plan Survey of Consumers	03/31/13
3060–1129	Broadband Speed Test and Unavailability Registry	02/28/13
3060–1130	National Broadband Plan Survey of Businesses	02/28/13
3060–1131	Implementation of the NET 911 Improvement Act of 2008: Location Information from Owners and Controllers of 911 and E911 Capabilities.	12/31/12
3060–1133	FCC 308 and Secs. 73.3545 and 73.3580	01/31/13
3060–1135	Rules Authorizing the Operation of Low Power Auxiliary Stations (including Wireless Microphones).	08/31/13
3060–1136	Spectrum Dashboard Customer Feedback	08/31/13
3060–1138	Secs. 1.49 and 1.54	04/30/13
3060–1139	Residential Fixed Broadband Services Testing and Measurement	02/28/14
3060–1140	Requests for Waiver of Various Petitioners to Allow the Establishment of 700 MHz Interoperable Public Safety Wireless Broadband Networks, Order, PS Docket No. 06–229, DA 10–2342.	06/30/14
3060–1142	Electronic Tariff Filing System (ETFS),WC Docket No. 10–141, FCC 10–127, NPRM.	09/30/13
3060–1143	E–Rate Deployed Ubiquitously (EDU) 2011 Pilot Program	04/30/14
3060–1144	Consumer Survey	02/28/14
3060–1145	Structure and Practices of the Video Relay Service Program, CG Docket No. 10–51.	09/30/14
3060–1146	Implementation of the 21st Century Communications and Video Accessibility Act of 2010, Section 105, Relay Services for Deaf-Blind Individuals, CG Docket No. 10–210.	Pending OMB review and approval.
3060–1147	Wireless E911 Phase II Location Accuracy Requirements	05/31/15
3060–1148	Sec. 79.3	Pending OMB review and approval.
3060–1150	Structure and Practices of the Video Relay Service Program, Second Report and Order, CG Docket No. 10–51.	06/30/15
3060–1151	Secs. 1.1420, 1.1422, and 1.1424	01/31/15
3060–1152	Implementing a Nationwide, Broadband, Interoperable Public Safety Network in the 700 MHz Band (Third Report and Order, PS Docket No. 06–229, FCC 11–6).	06/30/14
3060–1153	Satellite Digital Radio Service (SDARS)	07/31/14
3060–1154	Commercial Advertisement Loudness Mitigation (“CALM”) Act; Financial Hardship and General Waiver Requests.	06/30/15
3060–1155	Secs. 15.713, 15.714, 15.715 and 15.717	02/28/15
3060–1157	Formal Complaint Procedures, Preserving the Open Internet and Broadband Industry Practices, Report and Order, GN Docket No. 09–191 and WC Docket No. 07–52.	09/30/14
3060–1158	Disclosure of Network Management Practices, Preserving the Open Internet and Broadband Industry Practices, Report and Order, GN Docket No. 09–191 and WC Docket No. 07–52.	09/30/14
3060–1159	Part 25—Satellite Communications; and Part 27—Miscellaneous Wireless Communications Services in the 2.3 GHz Band.	09/30/14
3060–1161	Sec. 27.14(g)–(l)	10/31/14
3060–1162	Closed Captioning of Video Programming Delivered Using Internet Protocol, and Apparatus Closed Caption Requirements.	Pending OMB review and approval.
3060–1165	Sec. 74.605	03/31/15
3060–1166	FCC 180	04/30/15
3060–1167	Accessible Telecommunications and Advanced Communications Services and Equipment.	04/30/15

OMB Control No.	FCC form number or 47 CFR section or part, docket number or title identifying the collection	OMB expiration date
3060–1168	FCC 680	04/30/15
3060–1169	Part 11—Emergency Alert System (EAS), Fifth Report and Order, FCC 12–7.	11/30/12
3060–1171	Secs. 73.682(e) and 76.607(a), Commercial Advertisement Loudness Mitigation (''CALM'') Act.	06/30/15

[77 FR 48090, Aug. 13, 2012]

List of CFR Sections Affected

All changes in this volume of the Code of Federal Regulations (CFR) that were made by documents published in the FEDERAL REGISTER since January 1, 2009 are enumerated in the following list. Entries indicate the nature of the changes effected. Page numbers refer to FEDERAL REGISTER pages. The user should consult the entries for chapters, parts and subparts as well as sections for revisions.

For changes to this volume of the CFR prior to this listing, consult the annual edition of the monthly List of CFR Sections Affected (LSA). The LSA is available at *www.fdsys.gov*. For changes to this volume of the CFR prior to 2001, see the ''List of CFR Sections Affected, 1949–1963, 1964–1972, 1973–1985, and 1986–2000'' published in 11 separate volumes. The ''List of CFR Sections Affected 1986–2000'' is available at *www.fdsys.gov*.

2009

47 CFR

74 FR Page

Chapter I

52.21 (w) added 31638
52.26 (a) and (c) revised 31638
52.35 Added 31638
54.418 (a) and (d) amended; (b)(2)(i) and (ii) revised 8878
63.60 (a), (b), (c) and (d) redesignated as new (b), (c), (e) and (g); new (a), (b)(3), (d) and (f) added (OMB number pending in part) 39563
64 OMB number 4345
Actions on petitions 20892
Policy statement 37624, 47894
Waiver 54913

2010

47 CFR

75 FR Page

Chapter I

52.26 (a) revised 35315
52.35 Revised 35315
52.36 Added (eff. date pending) 35315
54 Policy statement 25113
Order 26137
54.5 Regulation at 71 FR 38796 confirmed 70149
54.301 (a)(2)(ii) revised 17874
54.409 Regulation at 69 FR 34600 June 22, 2004 confirmed in part 70149

47 CFR—Continued

75 FR Page

Chapter I—Continued

54.410 Regulation at 69 FR 34600 confirmed 70149
54.416 Regulation at 69 FR 34601 confirmed 70149
54.417 (a) correctly revised 15352
54.501 (a) removed; (b), (c) and (d) redesignated as new (a), (b) and (c); heading, new (a)(1), new (b)(1) and new (c)(1) revised 75411
54.502 Revised 75411
54.503 Revised 17589
Revised 75412
54.504 (b)(2)(iv) revised 17589
Revised 75413
54.505 (b)(4) revised 75414
54.506 Removed 75414
54.507 (g) introductory text, (1) introductory text, (i), (ii) and (iii) revised 17589
(a), (g) introductory text and (1)(i) revised 75414
(g) introductory text, (1) introductory text, (i), (ii) and (iii) revised 17589
54.508 Revised 75415
54.511 (a), (c)(1) introductory text, (ii) and (d)(1) revised; (c)(3) removed 75415
54.513 Regulation at 69 FR 6191 confirmed 70149
(a) revised; (b) and (c) redesignated as (c) and (d); new (b) added 75415

47 CFR—Continued

75 FR Page

Chapter I—Continued

54.514 Regulation at 68 FR 36942 confirmed in part 70149
54.517 (b) revised 17590
Removed 75415
(b) revised 17590
54.518 Revised 75415
54.519 (a) introductory text, (6) and (b) revised 75415
54.522 Removed 75416
54.609 Regulation at 68 FR 74502 confirmed in part 70149
Regulation at 70 FR 6373 confirmed 70149
54.621 Regulation at 68 FR 74503 confirmed 70149
54.703 Regulation at 63 FR 70573 confirmed in part 70149
54.708 Regulation at 71 FR 38797 confirmed 70149
54.712 Regulation at 71 FR 38797 confirmed 70149
63.60 Regulation at 74 FR 39563 confirmed in part 13235
64 Waiver 54040
64.604 (c)(5)(iii)(I) revised; interim (OMB number pending) 39860
64.605 Regulation at 73 FR 79696 confirmed 29914

2011

47 CFR

76 FR Page

Chapter I

43.11 Regulation at 73 FR 37881 eff. date confirmed 68641
43.53 Removed 42573
43.61 (a) introductory text revised; (b) and (c) removed 42573
43.82 (a) revised 42573
51 Authority citation revised 73854
Policy statement 81562
51.700 Added 73854
51.701 (a), (b) introductory text, (c), (d) and (e) revised; (b)(3) added 73855
51.703 Revised 73855
51.705 Revised 73855
51.707 Removed 73856
51.709 Revised 73856
51.711 (a) introductory text, (1) and (b) revised 73856
51.713 Revised 73856
51.715 (a) introductory text, (1), (b) introductory text and (2) revised; (d) amended 73856

47 CFR—Continued

76 FR Page

Chapter I—Continued

51.717 Removed 73856
51.901—51.919 (Subpart J) Added 73856
51.907 OMB number pending in part 73856
51.909 OMB number pending in part 73856
51.911 OMB number pending in part 73856
51.915 OMB number pending in part 73856
51.917 OMB number pending in part 73856
51.919 OMB number pending 73856
52.33 Regulation at 63 FR 35161 confirmed 61279
Regulation at 67 FR 40620 confirmed 61279
54 Order 4827
Authority citation revised 73869
Policy statement 81562
54.5 Amended 73869
54.7 Revised 73869
54.101 Revised 73870
54.202 Revised 73870
54.301 (a)(1) revised; (b) and (e)(1) amended 73870
54.302 Added 73870
54.303 Removed 73871
54.304 Added (OMB number pending) 73871
54.305 (a) and (b) amended 73871
54.307 (e) added 73871
54.309 (d) added 73872
54.311 Removed 73872
54.312 Added (OMB number pending in part) 73872
54.313 Revised (OMB number pending in part) 73873
54.314 Revised (OMB number pending) 73875
54.316 Removed 73876
54.318 Added 73876
54.320 Added (OMB number pending in part) 73876
54.401 (a)(1) revised 38046
54.405 (a) revised; (e) added 38046
54.500 (c) and (k) revised; eff. 10–13–11 56302
54.501 Heading and (a)(1) revised; eff. 10–13–11 56302
54.503 (c)(2)(i) revised; eff. 10–13–11 56302
54.504 (a)(1)(i) revised; eff. 10–13–11 56303

47 CFR—Continued

76 FR Page

Chapter I—Continued

54.507 (g)(1)(i) revised; eff. 10–13–11 56303
54.520 (a)(1), (4), (c)(1)(i), (iii)(B), (2)(i), (iii)(B) and (3)(i)(B) revised; (c)(4), (5) and (h) added; eff. 10–13–11 56303
54.601 (a)(3)(i) revised; interim 37282
54.702 (a), (b), (c) and (h) revised 73876
54.709 (b) amended 73876
54.715 (c) revised 73877
54.801 (f) added 73877
54.901 (b)(4), (c) and (d) added 73877
54.1001—54.1010 (Subpart L) Added 73877
54.1003 OMB number pending 73877
54.1004 OMB number pending in part 73877
54.1005 OMB number pending in part 73877
54.1006 OMB number pending in part 73877
54.1007 OMB number pending in part 73877
54.1008 OMB number pending in part 73877
54.1009 OMB number pending in part 73877
54.1010 OMB number pending in part 73877
61 Policy statement 81562
61.3 (t) through (y) redesignated as (u) through (z); new (t) added (OMB number pending) 43210
(aa) through (zz) correctly redesignated as (bb) through (aaa); old (z) correctly reinstated as (aa); CFR correction 60378
Regulation at 76 FR 43210 confirmed 61956
(bbb) added (OMB number pending) 73880
Regulation at 76 FR 73880 confirmed 76623
61.13 (a) and (b) revised (OMB number pending) 43210
Regulation at 76 FR 43210 confirmed 61956
61.14 (b) and (e) revised (OMB number pending) 43210
Regulation at 76 FR 43210 confirmed 61956
61.15 Revised (OMB number pending) 43210
Regulation at 76 FR 43210 confirmed 61956

47 CFR—Continued

76 FR Page

Chapter I—Continued

61.16 Revised (OMB number pending) 43211
Regulation at 76 FR 43211 confirmed 61956
61.17 Revised (OMB number pending) 43211
Regulation at 76 FR 43211 confirmed 61956
61.20 Revised (OMB number pending) 43211
Regulation at 76 FR 43211 confirmed 61956
61.21 Removed (OMB number pending) 43211
Regulation at 76 FR 43211 confirmed 61956
61.22 Removed (OMB number pending) 43211
Regulation at 76 FR 43211 confirmed 61956
61.23 Removed (OMB number pending) 43211
Regulation at 76 FR 43211 confirmed 61956
61.26 Revised 73881
Regulation at 76 FR 73881 confirmed 76623
61.32 Removed (OMB number pending) 43211
Regulation at 76 FR 43211 confirmed 61956
61.33 Removed (OMB number pending) 43211
Regulation at 76 FR 43211 confirmed 61956
61.38 Revised (OMB number pending) 43211
Regulation at 69 FR 25336 confirmed 61279
Regulation at 76 FR 43211 confirmed 61956
61.39 Revised (OMB number pending) 43212
Regulation at 76 FR 43212 confirmed 61956
(a) revised; (g) added 73882
Regulation at 76 FR 73882 confirmed 76623
61.40 (a) introductory text revised (OMB number pending) 43213
Regulation at 76 FR 43213 confirmed 61956
61.41 (a)(2) revised (OMB number pending) 43213
Regulation at 69 FR 25336 confirmed 61279

47 CFR—Continued

76 FR Page

Chapter I—Continued

Regulation at 76 FR 43213 confirmed....61956

61.42 (d) introductory text, (4), (e)(1) introductory text and (f) revised (OMB number pending) 43214

Regulation at 76 FR 43214 confirmed....61956

61.43 Revised (OMB number pending) 43214

Regulation at 76 FR 43214 confirmed....61956

61.45 (a), (b)(1)(i) introductory text and (d)(2) revised (OMB number pending) 43214

Regulation at 76 FR 43214 confirmed....61956

61.46 (a) introductory text revised (OMB number pending) 43214

Regulation at 76 FR 43214 confirmed....61956

61.47 (f), (i)(2) and (5) revised (OMB number pending) 43214

Regulation at 76 FR 43214 confirmed....61956

61.48 (i)(2), (3) introductory text, (4) and (l)(2) revised (OMB number pending)....43214

Regulation at 76 FR 43214 confirmed....61956

61.49 (f)(2), (3), (4), (g) introductory text, (2), (h), (k) and (l) revised (OMB number pending) 43215

Regulation at 76 FR 43215 confirmed....61956

61.51—61.59 (Subpart F) Designated as Subpart F; heading added (OMB number pending) 43215

Regulation at 76 FR 43215 confirmed....61956

61.51 Added (OMB number pending) 43215

Regulation at 76 FR 43215 confirmed....61956

61.51—61.59 (Subpart F) Regulation at 76 FR 43215 confirmed 61956

61.52 (a) removed; (b) and (c) redesignated as new (a) and (b); new (a) introductory text and (b) revised (OMB number pending) 43215

Regulation at 76 FR 43215 confirmed....61956

47 CFR—Continued

76 FR Page

Chapter I—Continued

61.55 (a) revised (OMB number pending) 43216

Regulation at 76 FR 43216 confirmed....61956

61.58 (a)(2)(ii), (d) and (e)(1) introductory text revised; (f) added (OMB number pending) 43216

Regulation at 76 FR 43216 confirmed....61956

61.59 (b) and (c) revised (OMB number pending)....43216

Regulation at 76 FR 43216 confirmed....61956

61.66—61.87 (Subpart F) Redesignated as Subpart G (OMB number pending)....43215

Regulation at 76 FR 43215 confirmed....61956

61.66 Revised (OMB number pending) 43216

Regulation at 76 FR 43216 confirmed....61956

61.68 (a) revised (OMB number pending) 43216

Regulation at 76 FR 43216 confirmed....61956

61.83 Revised (OMB number pending) 43216

Regulation at 76 FR 43216 confirmed....61956

61.86 Revised (OMB number pending) 43216

Regulation at 76 FR 43216 confirmed....61956

61.87 (a) introductory text, (1)(i), (ii), (3) and (c) revised (OMB number pending)....43216

Regulation at 76 FR 43216 confirmed....61956

61.131—61.136 (Subpart G) Redesignated as Subpart H (OMB number pending) 43215

Regulation at 76 FR 43215 confirmed....61956

61.132 Revised (OMB number pending) 43216

Regulation at 76 FR 43216 confirmed....61956

61.134 Revised(OMB number pending) 43216

Regulation at 76 FR 43216 confirmed....61956

61.151—61.153 (Subpart H) Removed(OMB number pending) 43215

47 CFR—Continued

76 FR Page

Chapter I—Continued
Regulation at 76 FR 43215 confirmed 61956
61.191 Revised (OMB number pending) 43217
Regulation at 76 FR 43216 confirmed 61956
63.19 Regulation at 72 FR 54366 confirmed 13295
63.23 (e) removed; (f) redesignated as new (e) 42573
63.24 Regulation at 72 FR 54366 confirmed in part 13295
64 Authority citation revised 24400, 26647, 43205, 65969, 67073, 73882
Actions on petitions 59557
Policy statement 81562
Regulation at 76 FR 43205 confirmed 61956
64.601—64.613 (Subpart F) Authority citation revised 24400, 26647, 65969, 67073
64.601 (a)(27) redesignated as (a)(28); new (a)(27) added 24400
(a)(10) revised; (a)(15) through (28) redesignated as (a)(16) through (29); new (a)(15) added 65969
64.604 Regulation at 75 FR 39860 confirmed 8659
(a)(6), (7), (b)(4)(iii), (c)(5)(iii)(L), (M), and (N) added; (c)(5)(iii)(C) revised (OMB number pending in part) 24400
(c)(5)(iii)(L)(*3*) corrected 30842
(b)(4)(iv) added; (c)(5)(iii)(F) revised 47474
(c)(5)(iii)(J) removed 63563
(c)(5)(iii)(A) and (B) revised; (c)(5)(iii)(D) removed; (c)(5)(iii)(C) redesignated as new (c)(5)(iii)(D); new (c)(5)(iii)(C) added 65969
Regulation at 76 FR 24400 confirmed in part 59269
64.606 (g) revised 24402
Heading, (a)(2), (b)(2), (c)(2), (e)(2), (f)(2) and (g) revised; (a)(3) and (h) added (OMB number pending in part) 47474
(a)(2)(v) and (g) revised; interim (OMB number pending in part) 47477
(a)(2)(ii)(A)(*4*), (*5*) and (E) revised; (a)(2)(ii)(A)(*6*), (*7*) and (*8*) added 67073

47 CFR—Continued

76 FR Page

Chapter I—Continued
Regulation at 76 FR 47477 eff. date confirmed in part; interim 68116
Regulation at 76 FR 47474 eff. date confirmed in part 68328
Regulation at 76 FR 67073 confirmed 68642
64.610 Added (OMB number pending in part) 26647
(c)(2)(ii) corrected 31261
Regulation at 76 FR 26647 confirmed 58412
64.611 (e) and (f) redesignated as (f) and (g); new (g)(1)(iii) and (iv) amended; new (e), (g)(1)(v) and (vi) added; eff. in part 10–27–11 (OMB number pending in part) 59557
Regulation at 76 FR 59557 confirmed in part 72124
64.613 (a)(1) and (2) revised; (a)(3) redesignated as (a)(4); new (a)(3) added; eff. in part 10–27–11 (OMB number pending in part) 59557
Regulation at 76 FR 59557 confirmed in part 72124
64.709 (d)(1) and (2) revised 43217
Regulation at 76 FR 43217 confirmed in part 61956
64.1600 (c), (d), (e) and (f) redesignated as (e), (f), (i) and (j); new (c), (d), (g) and (h) added 43205
(f) through (j) redesignated as (g) through (k); new (f) added 73882
64.1601 (a) revised 73882
64.1604 Redesignated as 64.1605; new 64.1604 added 43205
64.1605 Redesignated from 64.1604 43205
64.2401 Note removed 63563
64.5001 Regulation at 71 FR 43673 confirmed 61279
69 Policy statement 81562
69.1 (d) added 73882
69.3 (e)(6) and (9) revised; (e)(12) added (OMB number pending in part) 73882
Regulation at 76 FR 73882 confirmed 76623
69.123 Regulation at 69 FR 25336 confirmed 61279

2012

47 CFR

77 FR Page

Chapter I

51 Actions on petitions 3635
Technical correction 30903
51.907 Regulation at 76 FR 73856 confirmed in part 35623
(b)(2)(v), (vi) and (c)(1) revised; (b)(3) and (c)(4) added; (c)(3) removed 48452
51.909 Regulation at 76 FR 73856 confirmed in part 35623
(a)(3), (b)(2)(v), (3) and (c) revised; (b)(4) added 48452
51.911 Regulation at 76 FR 73856 confirmed in part 35623
(b) introductory text and (6) revised; (b)(7) added 48453
51.913 (a) revised 31536
Regulation at 77 FR 31536 eff. date corrected 36406
51.915 Regulation at 76 FR 73856 confirmed in part 35623
(d)(1)(i)(C)(*2*)(*i*), (ii)(C)(*2*)(*i*), (iii)(E)(*2*)(*i*), (iv)(E)(*2*)(*i*), (v)(E)(*2*)(*i*), (vi)(F)(*2*)(*i*) and (vii)(G)(*2*)(*i*) revised 48453
51.917 (d)(1)(i), (ii) and (iii) revised 14302
Regulation at 76 FR 73856 confirmed in part 35623
54 Actions on petitions 3635, 23630, 48453
Authority citation revised 71712
Order 30411, 42185
Technical correction 30903
Policy statement 39435
54.5 Amended 12966, 20553, 30913
54.101 (a) revised 1640, 12966
54.201 (a)(1) and (h) revised 12966
54.202 Revised (OMB number pending in part) 12966
Regulation at 77 FR 12966 confirmed in part 25609, 71712
54.209 Removed 12966
54.301 (f) removed 14302
54.304 Regulation at 76 FR 73871 confirmed 35623
54.307 (e)(1)(ii) revised 14302
(e)(3)(iii), (v) introductory text, (5) and (7) revised; (e)(3)(iv)(A) removed; (e)(3)(iv)(B) through (F) redesignated as new (e)(3)(iv)(A) through (E) 30913
(e)(5) revised 52618
54.312 Regulation at 76 FR 73872 confirmed in part 26987

47 CFR—Continued

77 FR Page

Chapter I—Continued

(b)(3) revised 31536
Regulation at 77 FR 31536 eff. date corrected 36406
54.313 (a)(9) introductory text, and (f)(2) revised (OMB number pending) 14302
Regulation at 76 FR 73873 confirmed in part 26987
(a)(10), (11), (c)(1) through (4), (d), (e)(3) introductory text, (f)(1) introductory text, (h) and (j) revised (OMB number pending in part) 30914
54.314 Regulation at 76 FR 73875 confirmed 26987
54.315 Removed 14302
54.318 (d) revised 14302
(a), (b), (c) and (f) revised; (h) and (i) added 30914
54.320 Regulation at 73876 confirmed in part 26987
54.400 Revised 12966
54.401 Revised (OMB number pending in part) 12967
Regulation at 77 FR 12967 eff. date corrected in part (OMB number pending in part) 19125
Regulation at 77 FR 12967 confirmed in part 25609, 71712
54.403 Revised (OMB number pending) 12967
Regulation at 77 FR 12967 confirmed 25609, 71712
54.404 Added 12968
54.405 Revised 12969
Regulation at 77 FR 12969 eff. date corrected in part (OMB number pending in part) 19125
Regulation at 77 FR 12969 confirmed in part 25609
54.407 Revised (OMB number pending) 12970
Regulation at 77 FR 12970 confirmed 25609, 71712
(d) corrected 38534
54.409 Revised 12970
(a)(3) correctly revised 38534
54.410 Revised (OMB number pending) 12970
Regulation at 77 FR 12970 eff. date corrected 19125
(d)(3)(iii) through (viii) correctly redesignated as (d)(3)(iv) through (ix); second (d)(3)(ii) correctly redesignated as new (d)(3)(iii) 19125

47 CFR—Continued

77 FR Page

Chapter I—Continued
Regulation at 77 FR 12970 confirmed in part 25609
Regulation at 77 FR 12970 confirmed 71712
(c)(1)(iii) correctly revised; second (d)(3)(ii) through (viii) correctly designated as (d)(3)(iii) through (ix) 38534
54.411 Removed 12972
54.412 Added 12972
(a) and (b) correctly revised 38534
54.413 Revised 12973
54.414 Added 12973
54.415 Removed 12973
54.416 Revised (OMB number pending) 12973
Regulation at 77 FR 12973 confirmed 25609, 71712
(a)(3) correctly removed 38534
54.417 Revised (OMB number pending) 12974
Regulation at 77 FR 12974 confirmed 25609, 71712
(c) correctly revised 38534
54.419 Added 12974
54.420 Added (OMB number pending) 12974
Regulation at 77 FR 12974 confirmed in part 25609
Regulation at 77 FR 12970 confirmed 71712
(a)(5) correctly revised 38534
54.422 Added (OMB number pending) 12974
Regulation at 77 FR 12974 eff. date corrected in part (OMB number pending) 19125
Regulation at 77 FR 12974 confirmed 25609, 71712
Correctly revised 38534
54.717 Amended 71712
54.903 (a)(2) revised 14303
54.1003 (b) revised (OMB number pending) 14303
Regulation at 76 FR 73877 confirmed 33097
54.1004 Regulation at 76 FR 73877 confirmed in part 33097
54.1005 Regulation at 76 FR 73877 confirmed in part 33097
54.1006 Regulation at 76 FR 73877 confirmed in part 33097
54.1007 Regulation at 76 FR 73877 confirmed in part 33097
54.1008 Regulation at 76 FR 73877 confirmed in part 33097

47 CFR—Continued

77 FR Page

Chapter I—Continued
54.1009 (a) introductory text revised 30915
61 Actions on petitions 3635
61.3 Regulation at 76 FR 73880 confirmed 37614
61.26 (f) revised 20553
64 Technical correction 18106
Actions on petitions 1039, 3635, 75894
Waiver 20553
Authority citation revised 30919, 34246, 71137
Policy statement 43538
64.604 (c)(5)(iii)(D)(*2*) correctly amended 60630
64.606 (a)(2)(v) added 33662
64.610 Regulation at 76 FR 26647 confirmed in part 42187
64.1200 (a), (b), (c) and (f) revised (OMB number pending in part) 34246
Regulation at 77 FR 34246 confirmed in part 63240
Regulation at 77 FR 63240 eff. dates corrected 66935
64.1202 Added (OMB number pending) 71137
64.2400—64.2401 (Subpart Y) Heading revised 30919
64.2400 (b) revised 30919
64.2401 (a)(3) redesignated as (a)(4); new (a)(3) and (f) added (OMB number pending in part) 30919
Regulation at 77 FR 30919 confirmed in part 65320
Regulation at 77 FR 30919 eff. dates corrected 71353
(f) correctly revised (OMB number pending) 71354
69 Actions on petitions 3635
69.3 Regulation at 76 FR 73882 confirmed in part 37614

2013

47 CFR

78 FR Page

Chapter I
43 Authority citation revised 15623
43.01 (a), (b) and (d) revised (OMB numbers pending) 49149
43.11 (a), (b) and (c) revised (OMB numbers pending) 49149

47 CFR—Continued

78 FR Page

Chapter I—Continued

43.51 (a)(1) introductory text and (d) revised; (b)(1) and (2) amended; (b)(3), (e) and (f) removed (OMB number pending in part) 11112
43.61 Removed (OMB number pending) 15623
43.62 Added (OMB number pending) 15623
43.82 Removed (OMB number pending) 15623
51 Order 39617
51.217 Regulation at 64 FR 51911 confirmed 52710
51.319 (d) removed; (e), (f) and (g) redesignated as new (d), (e) and (f); (a) and new (d) revised 5746
51.909 (a)(4), (5) and (6) added; (a)(3) and (c)(1) revised 26267
51.915 (b)(13), (d)(1)(iii)(F), (iv)(F), (v)(F), (vi)(G), (vii)(H), (viii) and (f)(6) revised 26268
51.917 (b)(5), (6), (d)(1)(iii)(D) and (f)(3) revised 26268
52 Actions on petitions 36679
52.19 Regulation at 67 FR 6434 confirmed in part 52710
52.36 Regulation at 75 FR 35315 confirmed 52710
53 Order 39617
53.203 Regulation at 62 FR 2968 confirmed 52710
54 Authority citation revised 38232, 48624
Policy statement 5750, 16808, 20796, 26269, 26705, 70881
Regulation at 78 FR 5750 confirmed 10100
Regulation at 78 FR 29063 confirmed 70238
Order (OMB number pending) 29063, 32991
Order 42699
Regulation at 78 FR 32991 eff. date confirmed 44893
54.5 Amended 13982
54.304 (c)(1) and (d)(1) revised 26268
54.312 (b) introductory text amended; (c) added (OMB number pending in part) 38233
Regulation at 78 FR 38233 eff. date confirmed in part 44893
(b)(3) and (c)(4) revised 48624
54.313 (f)(2) revised (OMB number pending in part) 3843

47 CFR—Continued

78 FR Page

Chapter I—Continued

(a) introductory text and (11) revised (OMB number pending) 22201
(a)(9) introductory text revised 29656
(b) revised (OMB number pending) 38233
Regulation at 78 FR 38233 eff. date confirmed 44893
54.313 Regulation at 76 FR 73873 eff. date confirmed 47211
Regulation at 77 FR 30914 eff. date confirmed 47211
Regulation at 78 FR 3843 eff. date confirmed 47211
Regulation at 78 FR 22201 eff. date confirmed 47211
54.410 (a) revised 40970
54.600 Undesignated center heading and section added 13982
54.601 Revised (OMB number pending in part) 13982
Regulation at 78 FR 13982 eff. date confirmed in part 54967
54.602 Added 13982
54.603 Undesignated center heading added; heading, (a), (b)(1) introductory text, (i) and (ii) revised; (b)(1)(iii) removed (OMB number pending in part) 13983
Regulation at 78 FR 13983 eff. date confirmed in part 54967
54.604 (a), (b) and (c) redesignated as (c), (d) and (e); Heading and new (c) introductory text revised; new (a) and new (b) added 13983
54.605 (a) revised 13983
54.609 (a) introductory text, (1)(iv), (3), (d)(1), (2) and (e)(1) revised (OMB number pending in part) 13983
Regulation at 78 FR 13983 eff. date confirmed in part 54967
54.611 Removed 13984
54.613 (b) removed 13984
54.615 (b), (c) introductory text and (2) revised; (c)(3) removed (OMB number pending in part) 13984
Regulation at 78 FR 13984 eff. date confirmed in part 54967
54.617 Removed 13984
54.619 (a)(1) and (d) revised (OMB number pending in part) 13984

47 CFR—Continued

78 FR Page

Chapter I—Continued

Regulation at 78 FR 13984 eff. date confirmed 54967
54.621 Removed 13984
54.623 Revised (OMB number pending in part) 13984
Regulation at 78 FR 13984 eff. date confirmed in part 54967
54.625 Revised 13984
54.630 Undesignated center heading and section added 13984
54.631 Added (OMB number pending in part) 13985
Regulation at 78 FR 13985 eff. date confirmed in part 54967
54.632 Added (OMB number pending) 13985
Regulation at 78 FR 13985 eff. date confirmed 54967
54.633 Added (OMB number pending in part) 13985
Regulation at 78 FR 13985 eff. date confirmed in part 54967
54.634 Added (OMB number pending in part) 13986
Regulation at 78 FR 13986 eff. date confirmed in part 54967
54.635 Added 13986
54.636 Added (OMB number pending) 13987
Regulation at 78 FR 13987 eff. date confirmed 54967
54.637 Added 13987
54.638 Added 13987
54.639 Added (OMB number pending in part) 13987
Regulation at 78 FR 13987 eff. date confirmed in part 54967
54.640 Added (OMB number pending in part) 13988
Regulation at 78 FR 13988 eff. date confirmed 38606
54.642 Added (OMB number pending) 13988
Regulation at 78 FR 13988 eff. date confirmed 54967
54.643 Added (OMB number pending) 13990
Regulation at 78 FR 13990 eff. date confirmed 54967
54.644 Added 13991
54.645 Added (OMB number pending) 13991
Regulation at 78 FR 13991 eff. date confirmed 54967
54.646 Added (OMB number pending) 13991

47 CFR—Continued

78 FR Page

Chapter I—Continued

Regulation at 78 FR 13991 eff. date confirmed 54967
54.647 Added (OMB number pending) 13991
Regulation at 78 FR 13991 eff. date confirmed 54967
54.648 Added (OMB number pending in part) 13991
Regulation at 78 FR 13991 eff. date confirmed in part 54967
54.649 Added 13992
54.671 Undesignated center heading and section added 13992
54.672 Added 13992
54.675 Added (OMB number pending in part) 13992
Regulation at 78 FR 13992 eff. date confirmed in part 54967
54.679 Added (OMB number pending) 13992
Regulation at 78 FR 13992 eff. date confirmed 38606
54.680 Added 13993
54.901 (c) introductory text and (2) revised 26269
54.1008 Regulation at 76 FR 73877 eff. date confirmed in part 45071
54.1009 Regulation at 76 FR 73877 eff. date confirmed in part 45071
54.1010 Regulation at 76 FR 73877 eff. date confirmed in part 45071
63 Order 39617
63.10 (c)(2) and (4) revised (OMB number pending) 15623
63.14 (c) revised; (c) note removed 11112
63.17 (b) introductory text revised 11112
63.18 (l) removed 15623
63.21 (d) revised (OMB number pending) 15624
63.22 (f) redesignated as (h); new (f), (g), Note 1 and Note 2 added 11112
(e) revised (OMB number pending) 15624
63.62 Regulation at 61 FR 15733 confirmed in part 52710
64 Order 39617
64.601 (a)(2) through (29) revised; (a)(30) through (45) added 40605
64.604 (c)(5)(iii)(E) revised 8031
(c)(8), (9) and (10) added; interim (OMB number pending in part) 8038

47 CFR—Continued

78 FR Page

Chapter I—Continued
Regulation at 77 FR 8038 confirmed 3-7-13 through 9-3-13 14701
(b)(2)(iii), (4)(iv) and (c)(5)(iii)(N)(*1*)(*iii*) revised; (c)(11), (12), (13) and (d) added 40607
(a)(1)(v) revised; (a)(1)(viii) and (b)(7) added eff. 10-15-13 49696
(c)(8), (9) and (10) revised; (c)(11) added (OMB number pending in part) 53691
64.605 (b)(4)(ii) revised 40608
64.606 (a)(4), (g)(3) and (4) added 40608
(a)(2)(ii)(F) added (OMB number pending) 53694
64.611 (a)(3), (4) and (h) added; (f) revised 40608
64.615 Added 40609
64.617 Added 40609
64.619 Added 40609
64.621 Added 40609
64.623 Added 40609
64.630 Added 40609
64.631 Added 40609
64.632 Added 40609
64.633 Added 40609
64.634 Added 40609
64.635 Added 40609
64.636 Added 40609
64.1001—64.1002 (Subpart J) Removed 11113
64.1202 Regulation at 77 FR 71137 confirmed 18246
64.1310 Regulation at 70 FR 722 confirmed 52710
64.2101—64.2109 (Subpart V) Added 76239
64.2201 (Subpart W) Added 76239
64.5101—64.5111 (Subpart EE) Added 40613
64.6000—64.6060 (Subpart FF) Added 67975
69 Policy statement 2572, 67053
Technical correction 24683
69.2 Removed 5750
69.306 (d)(2) revised; (d)(3) added 26269
69.415 (c)(4) revised 5750
(b) and (c) introductory text revised; (d) added 26269
69.502 (c) removed; (d) and (e) redesignated as new (c) and (d) 5750

2014

(Regulations published from January 1, 2014, through October 1, 2014)

47 CFR

79 FR Page

Chapter I
43.01 Regulation at 78 FR 49149 confirmed 36232
43.11 Regulation at 78 FR 49149 confirmed 36232
51.907 (d)(2)(i), (iii), (e)(1)(ii) and (f) revised 28844
51.909 (d)(3)(ii), (iii), (e)(1)(i), (ii), (f), (g)(1) introductory text, (i), (ii), (h)(1) introductory text, (i) and (ii) revised 28845
51.915 (b)(14) and (d)(4) added; (d)(1)(iii)(B), (C), (iv)(B), (C), (v)(B), (C), (vi)(B), (vii)(B) and (2) revised 28846
51.917 (d)(1)(iii)(D) and (vii) revised 28847
54 Policy statement ... 17070, 29111, 33705, 45705
Regulation at 78 FR 32991 confirmed 34639
54.5 Amended 49197
54.302 (b) revised 39188
54.305 (d) and (e) revised 39188
54.309 Revised 11335
54.310 Added 11335
(a) and (b) revised; (e) and (f) added (OMB number pending in part) 39189
54.312 Regulation at 78 FR 48624 confirmed in part 34639
54.313 (e)(1). (2) and (3) introductory text revised (OMB numbers pending in part) 11336
Regulation at 78 FR 38233 confirmed 34639
(f)(1) introductory text and (i) revised 39189
54.314 (c) revised 39189
54.318 (d) and (g) revised 39190
54.319 Added 39190
54.500 Amended 49197
54.501 Heading and (a)(1) revised; (c)(1) removed; (c)(2) and (3) redesignated as new (c)(1) and (2) 49198
54.502 Revised (OMB number pending in part) 49198
54.503 (c), (d)(2)(i) and(4) revised; (e) added (OMB number pending in part) 49199
54.504 Revised (OMB number pending in part) 49199

47 CFR—Continued

79 FR Page

Chapter I—Continued

54.505 (b)(1), (2), (3)(i), (ii), (4) and (c) revised; (d) added 49201
54.507 Revised (OMB number pending in part) 49201
54.508 Removed 49203
54.511 Revised 49203
54.514 Revised (OMB number pending in part) 49203
54.516 Revised (OMB number pending in part) 49203
54.642 (h)(5) revised 49203
54.705 (a)(1)(vi), (vii) and (viii) removed 49204
54.719 Revised 49204
54.720 Revised (OMB number pending in part) 49204
54.903 (a)(1) and (2) revised 39190
54.1301—54.1310 (Subpart M) Added 39190
63.11 (g)(2) revised (OMB number pending) 31877

47 CFR—Continued

79 FR Page

Chapter I—Continued

63.18 (k) introductory text revised; (q) redesignated as (r); (k) note and new (q) added (OMB number pending in part) 31877
64 Policy statement 25682, 35956
64.604 Regulation at 78 FR 53691 eff. date confirmed in part 40003
Regulation at 78 FR 53691 confirmed in part 51446
(c)(9)(ii) introductory text, (iii) introductory text, (iv), (v), (vii), (xi), (10) and (11)(iii) revised; (c)(11)(i), (iv) and (v) removed 51450
(c)(11)(iv) correctly added 53303
64.606 Regulation at 78 FR 53694 eff. date confirmed 40003
64.6000—64.6060 (Subpart FF) Regulation at 78 FR 67959 confirmed 33709
69 Regulation at 78 FR 2572 eff. date confirmed 57810
Policy statement; eff. 10-27-14 57811
69.413 Revised 39193