AUTHENTICATED
U.S. GOVERNMENT
INFORMATION
GPO

CODE OF FEDERAL REGULATIONS

Title 49
Transportation

Parts 178 to 199

Revised as of October 1, 2014

Containing a codification of documents
of general applicability and future effect

As of October 1, 2014

Published by the Office of the Federal Register
National Archives and Records Administration
as a Special Edition of the Federal Register

U.S. GOVERNMENT OFFICIAL EDITION NOTICE

Legal Status and Use of Seals and Logos

The seal of the National Archives and Records Administration (NARA) authenticates the Code of Federal Regulations (CFR) as the official codification of Federal regulations established under the Federal Register Act. Under the provisions of 44 U.S.C. 1507, the contents of the CFR, a special edition of the Federal Register, shall be judicially noticed. The CFR is prima facie evidence of the original documents published in the Federal Register (44 U.S.C. 1510).

It is prohibited to use NARA's official seal and the stylized Code of Federal Regulations logo on any republication of this material without the express, written permission of the Archivist of the United States or the Archivist's designee. Any person using NARA's official seals and logos in a manner inconsistent with the provisions of 36 CFR part 1200 is subject to the penalties specified in 18 U.S.C. 506, 701, and 1017.

Use of ISBN Prefix

This is the Official U.S. Government edition of this publication and is herein identified to certify its authenticity. Use of the 0–16 ISBN prefix is for U.S. Government Printing Office Official Editions only. The Superintendent of Documents of the U.S. Government Printing Office requests that any reprinted edition clearly be labeled as a copy of the authentic work with a new ISBN.

U.S. GOVERNMENT PRINTING OFFICE

U.S. Superintendent of Documents • Washington, DC 20402–0001

http://bookstore.gpo.gov

Phone: toll-free (866) 512-1800; DC area (202) 512-1800

Table of Contents

	Page
Explanation	v
Title 49:	
SUBTITLE B—OTHER REGULATIONS RELATING TO TRANSPORTATION (CONTINUED)	
Chapter I—Pipeline and Hazardous Materials Safety Administration, Department of Transportation (Continued)	5
Finding Aids:	
Table of CFR Titles and Chapters	637
Alphabetical List of Agencies Appearing in the CFR	657
List of CFR Sections Affected	667

Cite this Code: CFR

To cite the regulations in this volume use title, part and section number. Thus, 49 CFR 178.1 *refers to title 49, part 178, section 1.*

Explanation

The Code of Federal Regulations is a codification of the general and permanent rules published in the Federal Register by the Executive departments and agencies of the Federal Government. The Code is divided into 50 titles which represent broad areas subject to Federal regulation. Each title is divided into chapters which usually bear the name of the issuing agency. Each chapter is further subdivided into parts covering specific regulatory areas.

Each volume of the Code is revised at least once each calendar year and issued on a quarterly basis approximately as follows:

Title 1 through Title 16.....as of January 1
Title 17 through Title 27.....as of April 1
Title 28 through Title 41.....as of July 1
Title 42 through Title 50.....as of October 1

The appropriate revision date is printed on the cover of each volume.

LEGAL STATUS

The contents of the Federal Register are required to be judicially noticed (44 U.S.C. 1507). The Code of Federal Regulations is prima facie evidence of the text of the original documents (44 U.S.C. 1510).

HOW TO USE THE CODE OF FEDERAL REGULATIONS

The Code of Federal Regulations is kept up to date by the individual issues of the Federal Register. These two publications must be used together to determine the latest version of any given rule.

To determine whether a Code volume has been amended since its revision date (in this case, October 1, 2014), consult the ''List of CFR Sections Affected (LSA),'' which is issued monthly, and the ''Cumulative List of Parts Affected,'' which appears in the Reader Aids section of the daily Federal Register. These two lists will identify the Federal Register page number of the latest amendment of any given rule.

EFFECTIVE AND EXPIRATION DATES

Each volume of the Code contains amendments published in the Federal Register since the last revision of that volume of the Code. Source citations for the regulations are referred to by volume number and page number of the Federal Register and date of publication. Publication dates and effective dates are usually not the same and care must be exercised by the user in determining the actual effective date. In instances where the effective date is beyond the cutoff date for the Code a note has been inserted to reflect the future effective date. In those instances where a regulation published in the Federal Register states a date certain for expiration, an appropriate note will be inserted following the text.

OMB CONTROL NUMBERS

The Paperwork Reduction Act of 1980 (Pub. L. 96–511) requires Federal agencies to display an OMB control number with their information collection request.

Many agencies have begun publishing numerous OMB control numbers as amendments to existing regulations in the CFR. These OMB numbers are placed as close as possible to the applicable recordkeeping or reporting requirements.

PAST PROVISIONS OF THE CODE

Provisions of the Code that are no longer in force and effect as of the revision date stated on the cover of each volume are not carried. Code users may find the text of provisions in effect on any given date in the past by using the appropriate List of CFR Sections Affected (LSA). For the convenience of the reader, a ''List of CFR Sections Affected'' is published at the end of each CFR volume. For changes to the Code prior to the LSA listings at the end of the volume, consult previous annual editions of the LSA. For changes to the Code prior to 2001, consult the List of CFR Sections Affected compilations, published for 1949-1963, 1964-1972, 1973-1985, and 1986-2000.

''[RESERVED]'' TERMINOLOGY

The term ''[Reserved]'' is used as a place holder within the Code of Federal Regulations. An agency may add regulatory information at a ''[Reserved]'' location at any time. Occasionally ''[Reserved]'' is used editorially to indicate that a portion of the CFR was left vacant and not accidentally dropped due to a printing or computer error.

INCORPORATION BY REFERENCE

What is incorporation by reference? Incorporation by reference was established by statute and allows Federal agencies to meet the requirement to publish regulations in the Federal Register by referring to materials already published elsewhere. For an incorporation to be valid, the Director of the Federal Register must approve it. The legal effect of incorporation by reference is that the material is treated as if it were published in full in the Federal Register (5 U.S.C. 552(a)). This material, like any other properly issued regulation, has the force of law.

What is a proper incorporation by reference? The Director of the Federal Register will approve an incorporation by reference only when the requirements of 1 CFR part 51 are met. Some of the elements on which approval is based are:

(a) The incorporation will substantially reduce the volume of material published in the Federal Register.

(b) The matter incorporated is in fact available to the extent necessary to afford fairness and uniformity in the administrative process.

(c) The incorporating document is drafted and submitted for publication in accordance with 1 CFR part 51.

What if the material incorporated by reference cannot be found? If you have any problem locating or obtaining a copy of material listed as an approved incorporation by reference, please contact the agency that issued the regulation containing that incorporation. If, after contacting the agency, you find the material is not available, please notify the Director of the Federal Register, National Archives and Records Administration, 8601 Adelphi Road, College Park, MD 20740-6001, or call 202-741-6010.

CFR INDEXES AND TABULAR GUIDES

A subject index to the Code of Federal Regulations is contained in a separate volume, revised annually as of January 1, entitled CFR INDEX AND FINDING AIDS. This volume contains the Parallel Table of Authorities and Rules. A list of CFR titles, chapters, subchapters, and parts and an alphabetical list of agencies publishing in the CFR are also included in this volume.

An index to the text of ''Title 3—The President'' is carried within that volume.

The Federal Register Index is issued monthly in cumulative form. This index is based on a consolidation of the ''Contents'' entries in the daily Federal Register.

A List of CFR Sections Affected (LSA) is published monthly, keyed to the revision dates of the 50 CFR titles.

REPUBLICATION OF MATERIAL

There are no restrictions on the republication of material appearing in the Code of Federal Regulations.

INQUIRIES

For a legal interpretation or explanation of any regulation in this volume, contact the issuing agency. The issuing agency's name appears at the top of odd-numbered pages.

For inquiries concerning CFR reference assistance, call 202–741–6000 or write to the Director, Office of the Federal Register, National Archives and Records Administration, 8601 Adelphi Road, College Park, MD 20740-6001 or e-mail *fedreg.info@nara.gov*.

SALES

The Government Printing Office (GPO) processes all sales and distribution of the CFR. For payment by credit card, call toll-free, 866-512-1800, or DC area, 202-512-1800, M-F 8 a.m. to 4 p.m. e.s.t. or fax your order to 202-512-2104, 24 hours a day. For payment by check, write to: US Government Printing Office – New Orders, P.O. Box 979050, St. Louis, MO 63197-9000.

ELECTRONIC SERVICES

The full text of the Code of Federal Regulations, the LSA (List of CFR Sections Affected), The United States Government Manual, the Federal Register, Public Laws, Public Papers of the Presidents of the United States, Compilation of Presidential Documents and the Privacy Act Compilation are available in electronic format via *www.ofr.gov*. For more information, contact the GPO Customer Contact Center, U.S. Government Printing Office. Phone 202-512-1800, or 866-512-1800 (toll-free). E-mail, *ContactCenter@gpo.gov*.

The Office of the Federal Register also offers a free service on the National Archives and Records Administration's (NARA) World Wide Web site for public law numbers, Federal Register finding aids, and related information. Connect to NARA's web site at *www.archives.gov/federal-register*.

The e-CFR is a regularly updated, unofficial editorial compilation of CFR material and Federal Register amendments, produced by the Office of the Federal Register and the Government Printing Office. It is available at *www.ecfr.gov*.

CHARLES A. BARTH,
Director,
Office of the Federal Register.
October 1, 2014.

THIS TITLE

Title 49—TRANSPORTATION is composed of nine volumes. The parts in these volumes are arranged in the following order: Parts 1–99, parts 100–177, parts 178–199, parts 200–299, parts 300–399, parts 400–571, parts 572–999, parts 1000–1199, and part 1200 to end. The first volume (parts 1–99) contains current regulations issued under subtitle A—Office of the Secretary of Transportation; the second volume (parts 100–177) and the third volume (parts 178–199) contain the current regulations issued under chapter I—Pipeline and Hazardous Materials Safety Administration (DOT); the fourth volume (parts 200–299) contains the current regulations issued under chapter II—Federal Railroad Administration (DOT); the fifth volume (parts 300–399) contains the current regulations issued under chapter III—Federal Motor Carrier Safety Administration (DOT); the sixth volume (parts 400–571) contains the current regulations issued under chapter IV—Coast Guard (DHS), and some of chapter V—National Highway Traffic Safety Administration (DOT); the seventh volume (parts 572–999) contains the rest of the regulations issued under chapter IV, and the current regulations issued under chapter VI—Federal Transit Administration (DOT), chapter VII—National Railroad Passenger Corporation (AMTRAK), and chapter VIII—National Transportation Safety Board; the eighth volume (parts 1000–1199) contains the current regulations issued under chapter X—Surface Transportation Board and the ninth volume (part 1200 to end) contains the current regulations issued under chapter X—Surface Transportation Board, chapter XI—Research and Innovative Technology Administration, and chapter XII—Transportation Security Administration, Department of Transportation. The contents of these volumes represent all current regulations codified under this title of the CFR as of October 1, 2014.

In the volume containing parts 100–177, see § 172.101 for the Hazardous Materials Table. The Federal Motor Vehicle Safety Standards appear in part 571.

Redesignation tables for chapter III—Federal Motor Carrier Safety Administration, Department of Transportation and chapter XII—Transportation Security Administration, Department of Transportation appear in the Finding Aids section of the fifth and ninth volumes.

For this volume, Susannah C. Hurley was Chief Editor. The Code of Federal Regulations publication program is under the direction of John Hyrum Martinez, assisted by Jim Hemphill.

Title 49—Transportation

(This book contains parts 178 to 199)

EDITORIAL NOTE: Other regulations issued by the Department of Transportation appear in 14 CFR chapters I and II, 23 CFR, 33 CFR chapters I and IV, 44 CFR chapter IV, 46 CFR chapters I through III, 48 CFR chapter 12, and 49 CFR chapters I through VI.

SUBTITLE B—OTHER REGULATIONS RELATING TO TRANSPORTATION (CONTINUED)

Part

CHAPTER I—Pipeline and Hazardous Materials Safety Administration, Department of Transportation, DOT 178

Subtitle B—Other Regulations Relating to Transportation (Continued)

CHAPTER I—PIPELINE AND HAZARDOUS MATERIALS SAFETY ADMINISTRATION, DEPARTMENT OF TRANSPORTATION (CONTINUED)

SUBCHAPTER C—HAZARDOUS MATERIALS REGULATIONS (Continued)

Part		*Page*
178	Specifications for packagings	7
179	Specifications for tank cars	254
180	Continuing qualification and maintenance of packagings	313
181–185	[Reserved]	

SUBCHAPTER D—PIPELINE SAFETY

186–189	[Reserved]	
190	Pipeline safety enforcement and regulatory procedures	375
191	Transportation of natural and other gas by pipeline; annual reports, incident reports, and safety-related condition reports	398
192	Transportation of natural and other gas by pipeline: Minimum Federal safety standards	404
193	Liquefied natural gas facilities: Federal safety standards	518
194	Response plans for onshore oil pipelines	537
195	Transportation of hazardous liquids by pipeline	548
196–197	[Reserved]	
198	Regulations for grants to aid State pipeline safety programs	616
199	Drug and alcohol testing	619

PART 178—SPECIFICATIONS FOR PACKAGINGS

Sec.
178.1 Purpose and scope.
178.2 Applicability and responsibility.
178.3 Marking of packagings.

Subpart A [Reserved]

Subpart B—Specifications for Inside Containers, and Linings

178.33 Specification 2P; inner nonrefillable metal receptacles.
178.33–1 Compliance.
178.33–2 Type and size.
178.33–3 Inspection.
178.33–4 Duties of inspector.
178.33–5 Material.
178.33–6 Manufacture.
178.33–7 Wall thickness.
178.33–8 Tests.
178.33–9 Marking.
178.33a Specification 2Q; inner nonrefillable metal receptacles.
178.33a–1 Compliance.
178.33a–2 Type and size.
178.33a–3 Inspection.
178.33a–4 Duties of inspector.
178.33a–5 Material.
178.33a–6 Manufacture.
178.33a–7 Wall thickness.
178.33a–8 Tests.
178.33a–9 Marking.
178.33b Specification 2S; inner nonrefillable plastic receptacles
178.33b–1 Compliance.
178.33b–2 Type and size.
178.33b–3 Inspection.
178.33b–4 Duties of inspector.
178.33b–5 Material.
178.33b–6 Manufacture.
178.33b–7 Design qualification test.
178.33b–8 Production tests.
178.33b–9 Marking.

Subpart C—Specifications for Cylinders

178.35 General requirements for specification cylinders.
178.36 Specification 3A and 3AX seamless steel cylinders.
178.37 Specification 3AA and 3AAX seamless steel cylinders.
178.38 Specification 3B seamless steel cylinders.
178.39 Specification 3BN seamless nickel cylinders.
178.42 Specification 3E seamless steel cylinders.
178.44 Specification 3HT seamless steel cylinders for aircraft use.
178.45 Specification 3T seamless steel cylinders.
178.46 Specification 3AL seamless aluminum cylinders.
178.47 Specification 4DS welded stainless steel cylinders for aircraft use.
178.50 Specification 4B welded or brazed steel cylinders.
178.51 Specification 4BA welded or brazed steel cylinders.
178.53 Specification 4D welded steel cylinders for aircraft use.
178.55 Specification 4B240ET welded or brazed cylinders.
178.56 Specification 4AA480 welded steel cylinders.
178.57 Specification 4L welded insulated cylinders.
178.58 Specification 4DA welded steel cylinders for aircraft use.
178.59 Specification 8 steel cylinders with porous fillings for acetylene.
178.60 Specification 8AL steel cylinders with porous fillings for acetylene.
178.61 Specification 4BW welded steel cylinders with electric-arc welded longitudinal seam.
178.65 Specification 39 non-reusable (non-refillable) cylinders.
178.68 Specification 4E welded aluminum cylinders.
178.69 Responsibilities and requirements for manufacturers of UN pressure receptacles.
178.70 Approval of UN pressure receptacles.
178.71 Specifications for UN pressure receptacles.
178.74 Approval of MEGCs.
178.75 Specifications for MEGCs.
APPENDIX A TO SUBPART C OF PART 178—ILLUSTRATIONS: CYLINDER TENSILE SAMPLE

Subparts D–G [Reserved]

Subpart H—Specifications for Portable Tanks

178.251—178.253–5 [Reserved]
178.255 Specification 60; steel portable tanks.
178.255–1 General requirements.
178.255–2 Material.
178.255–3 Expansion domes.
178.255–4 Closures for manholes and domes.
178.255–5 Bottom discharge outlets.
178.255–6 Loading and unloading accessories.
178.255–7 Protection of valves and accessories.
178.255–8 Safety devices.
178.255–9 Compartments.
178.255–10 Lining.
178.255–11 Tank mountings.
178.255–12 Pressure test.
178.255–13 Repair of tanks.
178.255–14 Marking.
178.255–15 Report.
178.273 Approval of Specification UN portable tanks.
178.274 Specification for UN portable tanks.

178.275 Specification for UN Portable Tanks intended for the transportation of liquid and solid hazardous materials.
178.276 Requirements for the design, construction, inspection and testing of portable tanks intended for the transportation of non-refrigerated liquefied compressed gases.
178.277 Requirements for the design, construction, inspection and testing of portable tanks intended for the transportation of refrigerated liquefied gases.

Subpart I [Reserved]

Subpart J—Specifications for Containers for Motor Vehicle Transportation

178.318 Specification MC 201; container for detonators and percussion caps.
178.318–1 Scope.
178.318–2 Container.
178.318–3 Marking.
178.320 General requirements applicable to all DOT specification cargo tank motor vehicles.
178.337 Specification MC 331; cargo tank motor vehicle primarily for transportation of compressed gases as defined in subpart G of part 173 of this subchapter.
178.337–1 General requirements.
178.337–2 Material.
178.337–3 Structural integrity.
178.337–4 Joints.
178.337–5 Bulkheads, baffles and ring stiffeners.
178.337–6 Closure for manhole.
178.337–7 Overturn protection.
178.337–8 Openings, inlets and outlets.
178.337–9 Pressure relief devices, piping, valves, hoses, and fittings.
178.337–10 Accident damage protection.
178.337–11 Emergency discharge control.
178.337–12 [Reserved]
178.337–13 Supporting and anchoring.
178.337–14 Gauging devices.
178.337–15 Pumps and compressors.
178.337–16 Testing.
178.337–17 Marking.
178.337–18 Certification.
178.338 Specification MC–338; insulated cargo tank motor vehicle.
178.338–1 General requirements.
178.338–2 Material.
178.338–3 Structural integrity.
178.338–4 Joints.
178.338–5 Stiffening rings.
178.338–6 Manholes.
178.338–7 Openings.
178.338–8 Pressure relief devices, piping, valves, and fittings.
178.338–9 Holding time.
178.338–10 Accident damage protection.
178.338–11 Discharge control devices.
178.338–12 Shear section.
178.338–13 Supporting and anchoring.
178.338–14 Gauging devices.
178.338–15 Cleanliness.
178.338–16 Inspection and testing.
178.338–17 Pumps and compressors.
178.338–18 Marking.
178.338–19 Certification.
178.340–178.343 [Reserved]
178.345 General design and construction requirements applicable to Specification DOT 406 (§178.346), DOT 407 (§178.347), and DOT 412 (§178.348) cargo tank motor vehicles.
178.345–1 General requirements.
178.345–2 Material and material thickness.
178.345–3 Structural integrity.
178.345–4 Joints.
178.345–5 Manhole assemblies.
178.345–6 Supports and anchoring.
178.345–7 Circumferential reinforcements.
178.345–8 Accident damage protection.
178.345–9 Pumps, piping, hoses and connections.
178.345–10 Pressure relief.
178.345–11 Tank outlets.
178.345–12 Gauging devices.
178.345–13 Pressure and leakage tests.
178.345–14 Marking.
178.345–15 Certification.
178.346 Specification DOT 406; cargo tank motor vehicle.
178.346–1 General requirements.
178.346–2 Material and thickness of material.
178.346–3 Pressure relief.
178.346–4 Outlets.
178.346–5 Pressure and leakage tests.
178.347 Specification DOT 407; cargo tank motor vehicle.
178.347–1 General requirements.
178.347–2 Material and thickness of material.
178.347–3 Manhole assemblies.
178.347–4 Pressure relief.
178.347–5 Pressure and leakage test.
178.348 Specification DOT 412; cargo tank motor vehicle.
178.348–1 General requirements.
178.348–2 Material and thickness of material.
178.348–3 Pumps, piping, hoses and connections.
178.348–4 Pressure relief.
178.348–5 Pressure and leakage test.

Subpart K—Specifications for Packagings for Class 7 (Radioactive) Materials

178.350 Specification 7A; general packaging, Type A.

Subpart L—Non-bulk Performance-Oriented Packaging Standards

178.500 Purpose, scope and definitions.
178.502 Identification codes for packagings.
178.503 Marking of packagings.
178.504 Standards for steel drums.
178.505 Standards for aluminum drums.

178.506 Standards for metal drums other than steel or aluminum.
178.507 Standards for plywood drums.
178.508 Standards for fiber drums.
178.509 Standards for plastic drums and jerricans.
178.510 Standards for wooden barrels.
178.511 Standards for aluminum and steel jerricans.
178.512 Standards for steel, aluminum or other metal boxes.
178.513 Standards for boxes of natural wood.
178.514 Standards for plywood boxes.
178.515 Standards for reconstituted wood boxes.
178.516 Standards for fiberboard boxes.
178.517 Standards for plastic boxes.
178.518 Standards for woven plastic bags.
178.519 Standards for plastic film bags.
178.520 Standards for textile bags.
178.521 Standards for paper bags.
178.522 Standards for composite packagings with inner plastic receptacles.
178.523 Standards for composite packagings with inner glass, porcelain, or stoneware receptacles.

Subpart M—Testing of Non-bulk Packagings and Packages

178.600 Purpose and scope.
178.601 General requirements.
178.602 Preparation of packagings and packages for testing.
178.603 Drop test.
178.604 Leakproofness test.
178.605 Hydrostatic pressure test.
178.606 Stacking test.
178.607 Cooperage test for bung-type wooden barrels.
178.608 Vibration standard.
178.609 Test requirements for packagings for infectious substances.

Subpart N—IBC Performance-Oriented Standards

178.700 Purpose, scope and definitions.
178.702 IBC codes.
178.703 Marking of IBCs.
178.704 General IBC standards.
178.705 Standards for metal IBCs.
178.706 Standards for rigid plastic IBCs.
178.707 Standards for composite IBCs.
178.708 Standards for fiberboard IBCs.
178.709 Standards for wooden IBCs.
178.710 Standards for flexible intermediate bulk containers.

Subpart O—Testing of IBCs

178.800 Purpose and scope.
178.801 General requirements.
178.802 Preparation of fiberboard IBCs for testing.
178.803 Testing and certification of IBCs.
178.810 Drop test.
178.811 Bottom lift test.
178.812 Top lift test.
178.813 Leakproofness test.
178.814 Hydrostatic pressure test.
178.815 Stacking test.
178.816 Topple test.
178.817 Righting test.
178.818 Tear test.
178.819 Vibration test.

Subpart P—Large Packagings Standards

178.900 Purpose and scope.
178.905 Large Packaging identification codes.
178.910 Marking of Large Packagings.
178.915 General Large Packaging standards.
178.920 Standards for metal Large Packagings.
178.925 Standards for rigid plastic Large Packagings.
178.930 Standards for fiberboard Large Packagings.
178.935 Standards for wooden Large Packagings.
178.940 Standards for flexible Large Packagings.

Subpart Q—Testing of Large Packagings

178.950 Purpose and scope.
178.955 General requirements.
178.960 Preparation of Large Packagings for testing.
178.965 Drop test.
178.970 Bottom lift test.
178.975 Top lift test.
178.980 Stacking test.
178.985 Vibration test.

Subpart R—Flexible Bulk Container Standards

178.1000 Purpose and scope.
178.1005 Flexible Bulk Container identification code.
178.1010 Marking of Flexible Bulk Containers.
178.1015 General Flexible Bulk Container standards.
178.1020 Period of use for transportation of hazardous materials in Flexible Bulk Containers.

Subpart S—Testing of Flexible Bulk Containers

178.1030 Purpose and scope.
178.1035 General requirements.
178.1040 Preparation of Flexible Bulk Containers for testing.
178.1045 Drop test.
178.1050 Top lift test.
178.1055 Stacking test.
178.1060 Topple test.
178.1065 Righting test.
178.1070 Tear test.

APPENDIX A TO PART 178—SPECIFICATIONS FOR STEEL
APPENDIX B TO PART 178—ALTERNATIVE LEAKPROOFNESS TEST METHODS
APPENDIX C TO PART 178—NOMINAL AND MINIMUM THICKNESSES OF STEEL DRUMS AND JERRICANS
APPENDIX D TO PART 178—THERMAL RESISTANCE TEST
APPENDIX E TO PART 178—FLAME PENETRATION RESISTANCE TEST

AUTHORITY: 49 U.S.C. 5101–5128; 49 CFR 1.81 and 1.97.

§ 178.1 Purpose and scope.

This part prescribes the manufacturing and testing specifications for packaging and containers used for the transportation of hazardous materials in commerce.

[Amdt. 178–40, 42 FR 2689, Jan. 13, 1977. Redesignated by Amdt. 178–97, 55 FR 52715, Dec. 21, 1990]

§ 178.2 Applicability and responsibility.

(a) *Applicability*. (1) The requirements of this part apply to packagings manufactured—

(i) To a DOT specification, regardless of country of manufacture; or

(ii) To a UN standard, for packagings manufactured within the United States. For UN standard packagings manufactured outside the United States, see § 173.24(d)(2) of this subchapter. For UN standard packagings for which standards are not prescribed in this part, see § 178.3(b).

(2) A manufacturer of a packaging subject to the requirements of this part is primarily responsible for compliance with the requirements of this part. However, any person who performs a function prescribed in this part shall perform that function in accordance with this part.

(b) *Specification markings*. When this part requires that a packaging be marked with a DOT specification or UN standard marking, marking of the packaging with the appropriate DOT or UN markings is the certification that—

(1) Except as otherwise provided in this section, all requirements of the DOT specification or UN standard, including performance tests, are met; and

(2) All functions performed by, or on behalf of, the person whose name or symbol appears as part of the marking conform to requirements specified in this part.

(c) *Notification*. (1) Except as specifically provided in §§ 178.337–18, 178.338–19, and 178.345–15 of this part, the manufacturer or other person certifying compliance with the requirements of this part, and each subsequent distributor of that packaging must:

(i) Notify each person to whom that packaging is transferred—

(A) Of all requirements in this part not met at the time of transfer, and

(B) With information specifying the type(s) and dimensions of the closures, including gaskets and any other components needed to ensure that the packaging is capable of successfully passing the applicable performance tests. This information must include any procedures to be followed, including closure instructions for inner packagings and receptacles, to effectively assemble and close the packaging for the purpose of preventing leakage in transportation. Closure instructions must provide for a consistent and repeatable means of closure that is sufficient to ensure the packaging is closed in the same manner as it was tested. For packagings sold or represented as being in conformance with the requirements of this subchapter applicable to transportation by aircraft, this information must include relevant guidance to ensure that the packaging, as prepared for transportation, will withstand the pressure differential requirements in § 173.27 of this subchapter.

(ii) Retain copies of each written notification for at least one year from date of issuance; and

(iii) Make copies of all written notifications available for inspection by a representative of the Department.

(2) The notification required in accordance with this paragraph (c) may be in writing or by electronic means, including e-mailed transmission or transmission on a CD or similar device. If a manufacturer or subsequent distributor of the packaging utilizes electronic means to make the required notifications, the notification must be specific to the packaging in question and must be in a form that can be printed in hard copy by the person receiving the notification.

(d) Except as provided in paragraph (c) of this section, a packaging not conforming to the applicable specifications or standards in this part may not be marked to indicate such conformance.

(e) *Definitions*. For the purpose of this part—

Manufacturer means the person whose name and address or symbol appears as part of the specification markings required by this part or, for a packaging marked with the symbol of an approval agency, the person on whose behalf the approval agency certifies the packaging.

Specification markings mean the packaging identification markings required by this part including, where applicable, the name and address or symbol of the packaging manufacturer or approval agency.

(f) No packaging may be manufactured or marked to a packaging specification that was in effect on September 30, 1991, and that was removed from this part 178 by a rule published in the FEDERAL REGISTER on December 21, 1990 and effective October 1, 1991.

[Amdt. 178–97, 55 FR 52715, Dec. 21, 1990; 56 FR 66284, Dec. 20, 1991, as amended by Amdt. No. 178–106, 59 FR 67519, Dec. 29, 1994; Amdt. 178–117, 62 FR 14338, Mar. 26, 1997; 68 FR 45041, July 31, 2003; 69 FR 34612, June 22, 2004; 75 FR 5395, Feb. 2, 2010; 75 FR 60339, Sept. 30, 2010; 78 FR 1118, Jan. 7, 2013; 78 FR 15328, Mar. 11, 2013]

§ 178.3 Marking of packagings.

(a) Each packaging represented as manufactured to a DOT specification or a UN standard must be marked on a non-removable component of the packaging with specification markings conforming to the applicable specification, and with the following:

(1) In an unobstructed area, with letters, and numerals identifying the standards or specification (e.g. UN 1A1, DOT 4B240ET, etc.).

(2) Unless otherwise specified in this part, the name and address or symbol of the packaging manufacturer or the person certifying compliance with a UN standard. Symbols, if used, must be registered with the Associate Administrator. Unless authorized in writing by the holder of the symbol, symbols must represent either the packaging manufacturer or the approval agency responsible for providing the most recent certification for the packaging through design certification testing or periodic retesting, as applicable. Duplicative symbols are not authorized.

(3) The markings must be stamped, embossed, burned, printed or otherwise marked on the packaging to provide adequate accessibility, permanency, contrast, and legibility so as to be readily apparent and understood.

(4) Unless otherwise specified, letters and numerals must be at least 12.0 mm (0.47 inches) in height except that for packagings of less than or equal to 30 L (7.9 gallons) capacity for liquids or 30 kg (66 pounds) capacity for solids the height must be at least 6.0 mm (0.2 inches). For packagings having a capacity of 5 L (1 gallon) or 5 kg (11 pounds) or less, letters and numerals must be of an appropriate size.

(5) For packages with a gross mass of more than 30 kg (66 pounds), the markings or a duplicate thereof must appear on the top or on a side of the packaging.

(b) A UN standard packaging for which the UN standard is set forth in this part may be marked with the United Nations symbol and other specification markings only if it fully conforms to the requirements of this part. A UN standard packaging for which the UN standard is not set forth in this part may be marked with the United Nations symbol and other specification markings for that standard as provided in the ICAO Technical Instructions or the IMDG Code subject to the following conditions:

(1) The U.S. manufacturer must establish that the packaging conforms to the applicable provisions of the ICAO Technical Instructions (IBR, see § 171.7 of this subchapter) or the IMDG Code (IBR, see § 171.7 of this subchapter), respectively.

(2) If an indication of the name of the manufacturer or other identification of the packaging as specified by the competent authority is required, the name and address or symbol of the manufacturer or the approval agency certifying compliance with the UN standard must be entered. Symbols, if used, must be registered with the Associate Administrator.

(3) The letters ''USA'' must be used to indicate the State authorizing the allocation of the specification marks if the packaging is manufactured in the United States.

(c) Where a packaging conforms to more than one UN standard or DOT specification, the packaging may bear more than one marking, provided the packaging meets all the requirements of each standard or specification. Where more than one marking appears on a packaging, each marking must appear in its entirety.

(d) No person may mark or otherwise certify a packaging or container as meeting the requirements of a manufacturing special permit unless that person is the holder of or a party to that special permit, an agent of the holder or party for the purpose of marking or certification, or a third party tester.

[Amdt. 178–97, 55 FR 52716, Dec. 21, 1990; 56 FR 66284, Dec. 20, 1991, as amended by Amdt. No. 178–106, 59 FR 67519, Dec. 29, 1994; Amdt. 178–113, 61 FR 21102, May 9, 1996; 65 FR 50462, Aug. 18, 2000; 66 FR 45386, Aug. 28, 2001; 67 FR 61015, Sept. 27, 2002; 68 FR 75748, Dec. 31, 2003; 70 FR 73166, Dec. 9, 2005; 78 FR 14714, Mar. 7, 2013]

Subpart A [Reserved]

Subpart B—Specifications for Inside Containers, and Linings

SOURCE: 29 FR 18823, Dec. 29, 1964, unless otherwise noted. Redesignated at 32 FR 5606, Apr. 5, 1967.

§ 178.33 Specification 2P; inner non-refillable metal receptacles.

§ 178.33–1 Compliance.

(a) Required in all details.

(b) [Reserved]

§ 178.33–2 Type and size.

(a) Single-trip inside containers. Must be seamless, or with seams, welded, soldered, brazed, double seamed, or swedged.

(b) The maximum capacity of containers in this class shall not exceed one liter (61.0 cubic inches). The maximum inside diameter shall not exceed 3 inches.

[29 FR 18813, Dec. 29, 1964, as amended by Order 71, 31 FR 9074, July 1, 1966. Redesignated at 32 FR 5606, Apr. 5, 1967, and amended by Amdt. 178–101, 58 FR 50237, Sept. 24, 1993; 66 FR 45386, Aug. 28, 2001]

§ 178.33–3 Inspection.

(a) By competent inspector.

(b) [Reserved]

§ 178.33–4 Duties of inspector.

(a) To inspect material and completed containers and witness tests, and to reject defective materials or containers.

(b) [Reserved]

§ 178.33–5 Material.

(a) Uniform quality steel plate such as black plate, electro-tin plate, hot dipped tin plate, tern plate or other commercially accepted can making plate; or nonferrous metal of uniform drawing quality.

(b) Material with seams, cracks, laminations or other injurious defects not authorized.

§ 178.33–6 Manufacture.

(a) By appliances and methods that will assure uniformity of completed containers; dirt and scale to be removed as necessary; no defect acceptable that is likely to weaken the finished container appreciably; reasonably smooth and uniform surface finish required.

(b) Seams when used must be as follows:

(1) Circumferential seams: By welding, swedging, brazing, soldering, or double seaming.

(2) Side seams: By welding, brazing, or soldering.

(c) Ends: The ends shall be of pressure design.

[29 FR 18823, Dec. 29, 1964, as amended by Order 71, 31 FR 9074, July 1, 1966. Redesignated at 32 FR 5606, Apr. 5, 1967]

§ 178.33–7 Wall thickness.

(a) The minimum wall thickness for any container shall be 0.007 inch.

(b) [Reserved]

[Order 71, 31 FR 9074, July 1, 1966. Redesignated at 32 FR 5606, Apr. 5, 1967]

§ 178.33–8 Tests.

(a) One out of each lot of 25,000 containers or less, successively produced per day shall be pressure tested to destruction and must not burst below 240 psig gauge pressure. The container tested shall be complete with end assembled.

(b) Each such 25,000 containers or less, successively produced per day, shall constitute a lot and if the test container shall fail, the lot shall be rejected or ten additional containers may be selected at random and subjected to the test under which failure occurred. These containers shall be complete with ends assembled. Should any of the ten containers thus tested fail, the entire lot must be rejected. All containers constituting a lot shall be of like material, size, design construction, finish, and quality.

[Order 71, 31 FR 9074, July 1, 1966. Redesignated at 32 FR 5606, Apr. 5, 1967, as amended by 66 FR 45387, Aug. 28, 2001]

§ 178.33–9 Marking.

(a) By means of printing, lithographing, embossing, or stamping, each container must be marked to show:

(1) DOT-2P.

(2) Name or symbol of person making the mark specified in paragraph (a)(1) of this section. Symbol, if used, must be registered with the Associate Administrator.

(b) [Reserved]

[Amdt. 178–40, 41 FR 38181, Sept. 9, 1976, as amended by Amdt. 178–97, 56 FR 66287, Dec. 20, 1991; 66 FR 45386, Aug. 28, 2001]

§ 178.33a Specification 2Q; inner nonrefillable metal receptacles.

§ 178.33a–1 Compliance.

(a) Required in all details.

(b) [Reserved]

[Order 71, 31 FR 9074, July 1, 1966. Redesignated at 32 FR 5606, Apr. 5, 1967]

§ 178.33a–2 Type and size.

(a) Single-trip inside containers. Must be seamless, or with seams welded, soldered, brazed, double seamed, or swedged.

(b) The maximum capacity of containers in this class shall not exceed 1 L (61.0 cubic inches). The maximum inside diameter shall not exceed 3 inches.

[Order 71, 31 FR 9074, July 1, 1966. Redesignated at 32 FR 5606, Apr. 5, 1967, and amended by Amdt. 178–43, 42 FR 42208, Aug. 22, 1977; Amdt. 178–101, 58 FR 50237, Sept. 24, 1993; 66 FR 45387, Aug. 28, 2001]

§ 178.33a–3 Inspection.

(a) By competent inspector.

(b) [Reserved]

[Order 71, 31 FR 9074, July 1, 1966. Redesignated at 32 FR 5606, Apr. 5, 1967]

§ 178.33a–4 Duties of inspector.

(a) To inspect material and completed containers and witness tests, and to reject defective materials or containers.

(b) [Reserved]

[Order 71, 31 FR 9074, July 1, 1966. Redesignated at 32 FR 5606, Apr. 5, 1967]

§ 178.33a–5 Material.

(a) Uniform quality steel plate such as black plate, electrotin plate, hot dipped tinplate, ternplate or other commercially accepted can making plate; or nonferrous metal of uniform drawing quality.

(b) Material with seams, cracks, laminations or other injurious defects not authorized.

[Order 71, 31 FR 9074, July 1, 1966. Redesignated at 32 FR 5606, Apr. 5, 1967]

§ 178.33a–6 Manufacture.

(a) By appliances and methods that will assure uniformity of completed containers; dirt and scale to be removed as necessary; no defect acceptable that is likely to weaken the finished container appreciably; reasonably smooth and uniform surface finish required.

(b) Seams when used must be as follows:

(1) Circumferential seams. By welding, swedging, brazing, soldering, or double seaming.

(2) Side seams. By welding, brazing or soldering.

(c) Ends. The ends shall be of pressure design.

[Order 71, 31 FR 9074, July 1, 1966. Redesignated at 32 FR 5606, Apr. 5, 1967]

§ 178.33a–7 Wall thickness.

(a) The minimum wall thickness for any container shall be 0.008 inch.

(b) [Reserved]

[Order 71, 31 FR 9074, July 1, 1966. Redesignated at 32 FR 5606, Apr. 5, 1967]

§ 178.33a–8 Tests.

(a) One out of each lot of 25,000 containers or less, successively produced per day, shall be pressure tested to destruction and must not burst below 270 psig gauge pressure. The container tested shall be complete with end assembled.

(b) Each such 25,000 containers or less, successively produced per day, shall constitute a lot and if the test container shall fail, the lot shall be rejected or ten additional containers may be selected at random and subjected to the test under which failure occurred. These containers shall be complete with ends assembled. Should any of the ten containers thus tested fail, the entire lot must be rejected. All containers constituting a lot shall be of like material, size, design, construction, finish and quality.

[Order 71, 31 FR 9074, July 1, 1966. Redesignated at 32 FR 5606, Apr. 5, 1967, as amended by 66 FR 45387, Aug. 28, 2001]

§ 178.33a–9 Marking.

(a) By means of printing, lithographing, embossing, or stamping, each container must be marked to show:

(1) DOT-2Q.

(2) Name or symbol of person making the mark specified in paragraph (a)(1) of this section. Symbol, if used, must be registered with the Associate Administrator.

(b) [Reserved]

[Amdt. 178–40, 41 FR 38181, Sept. 9, 1976, as amended by Amdt. 178–97, 56 FR 66287, Dec. 20, 1991; 66 FR 45386, Aug. 28, 2001]

§ 178.33b Specification 2S; inner non-refillable plastic receptacles.

§ 178.33b–1 Compliance.

(a) Required in all details.

(b) [Reserved]

[74 FR 2268, Jan. 14, 2009]

§ 178.33b–2 Type and size.

(a) Single-trip inside containers.

(b) The maximum capacity of containers in this class shall not exceed one liter (61.0 cubic inches). The maximum inside diameter shall not exceed 3 inches.

[74 FR 2268, Jan. 14, 2009]

§ 178.33b–3 Inspection.

(a) By competent inspector.

(b) [Reserved]

[74 FR 2268, Jan. 14, 2009]

§ 178.33b–4 Duties of inspector.

(a) To inspect material and completed containers and witness tests, and to reject defective materials or containers.

(b) [Reserved]

[74 FR 2268, Jan. 14, 2009]

§ 178.33b–5 Material.

(a) The receptacles must be constructed of polyethylene terephthalate (PET), polyethylene napthalate (PEN), polyamide (Nylon) or a blend of PET, PEN, ethyl vinyl alcohol (EVOH) and/or Nylon.

(b) Material with seams, cracks, laminations or other injurious defects are forbidden.

[74 FR 2268, Jan. 14, 2009]

§ 178.33b–6 Manufacture.

(a) Each container must be manufactured by thermoplastic processes that will assure uniformity of the completed container. No used material other than production residues or regrind from the same manufacturing process may be used. The packaging must be adequately resistant to aging and to degradation caused either by the substance contained or by ultraviolet radiation.

(b) [Reserved]

[74 FR 2268, Jan. 14, 2009]

§ 178.33b–7 Design qualification test.

(a) *Drop testing.* (1) To ensure that creep does not affect the ability of the container to retain the contents, each new design must be drop tested as follows: Three groups of twenty-five filled containers must be dropped from 1.8 m

(5.9 ft) on to a rigid, non-resilient, flat and horizontal surface. One group must be conditioned at 38 °C (100 °F) for 26 weeks, the second group for 100 hours at 50 °C (122 °F) and the third group for 18 hours at 55 °C (131 °F), prior to performing the drop test. The closure, or sealing component of the container, must not be protected during the test. The orientation of the test container at drop must be statistically random, but direct impact on the valve or valve closure must be avoided.

(2) *Criteria for passing the drop test:* The containers must not break or leak.

(b) Design qualification testing must be completed if the design is manufactured with a new mold or if there is any change in the properties of the material of construction.

[75 FR 73, Jan. 4, 2010]

§ 178.33b–8 Production tests.

(a) *Burst Testing.* (1) One out of each lot of 5,000 containers or less, successively produced per day must be pressure tested to destruction and must not burst below 240 psig. The container tested must be complete as intended for transportation.

(2) Each such 5,000 containers or less, successively produced per day, shall constitute a lot and if the test container shall fail, the lot shall be rejected or ten additional containers may be selected at random and subjected to the test under which failure occurred. These containers shall be complete as intended for transportation. Should any of the ten containers thus tested fail, the entire lot must be rejected. All containers constituting a lot shall be of like material, size, design construction, finish, and quality.

(b) [Reserved]

[74 FR 2268, Jan. 14, 2009, as amended at 75 FR 74, Jan. 4, 2010]

§ 178.33b–9 Marking.

(a) Each container must be clearly and permanently marked to show:

(1) DOT–2S.

(2) Name or symbol of person making the mark specified in paragraph (a)(1) of this section. Symbol, if used, must be registered with the Associate Administrator.

(b) [Reserved]

[74 FR 2268, Jan. 14, 2009]

Subpart C—Specifications for Cylinders

§ 178.35 General requirements for specification cylinders.

(a) *Compliance.* Compliance with the requirements of this subpart is required in all details.

(b) *Inspections and analyses.* Chemical analyses and tests required by this subchapter must be made within the United States, unless otherwise approved in writing by the Associate Administrator, in accordance with subpart I of part 107 of this chapter. Inspections and verification must be performed by—

(1) An independent inspection agency approved in writing by the Associate Administrator, in accordance with subpart I of part 107 of this chapter; or

(2) For DOT Specifications 3B, 3BN, 3E, 4B, 4BA, 4D (water capacity less than 1,100 cubic inches), 4B240ET, 4AA480, 4L, 8, 8AL, 4BW, 39 (marked service pressure 900 p.s.i.g. or lower) and 4E manufactured in the United States, a competent inspector of the manufacturer.

(c) *Duties of inspector.* The inspector shall determine that each cylinder made is in conformance with the applicable specification. Except as otherwise specified in the applicable specification, the inspector shall perform the following:

(1) Inspect all material and reject any not meeting applicable requirements. For cylinders made by the billet-piercing process, billets must be inspected and shown to be free from pipe, cracks, excessive segregation and other injurious defects after parting or, when applicable, after nick and cold break.

(2) Verify the material of construction meets the requirements of the applicable specification by—

(i) Making a chemical analysis of each heat of material;

(ii) Obtaining a certified chemical analysis from the material manufacturer for each heat of material (a ladle analysis is acceptable); or

(iii) If an analysis is not provided for each heat of material by the material

manufacturer, by making a check analysis of a sample from each coil, sheet, or tube.

(3) Verify compliance of cylinders with the applicable specification by—

(i) Verifying identification of material is proper;

(ii) Inspecting the inside of the cylinder before closing in ends;

(iii) Verifying that the heat treatment is proper;

(iv) Obtaining samples for all tests and check chemical analyses (NOTE: Recommended locations for test specimens taken from welded cylinders are depicted in Figures 1 through 5 in Appendix C to this subpart for the specific construction design.);

(v) Witnessing all tests;

(vi) Verify threads by gauge;

(vii) Reporting volumetric capacity and tare weight (see report form) and minimum thickness of wall noted; and

(viii) Verifying that each cylinder is marked in accordance with the applicable specification.

(4) *Inspector's report.* Prepare a report containing, at a minimum, the applicable information listed in CGA C–11 (IBR, see §171.7 of this subchapter). Any additional information or markings that are required by the applicable specification must be shown on the test report. The signature of the inspector on the reports certifies that the processes of manufacture and heat treatment of cylinders were observed and found satisfactory. The inspector must furnish the completed test reports required by this subpart to the maker of the cylinder and, upon request, to the purchaser. The test report must be retained by the inspector for fifteen years from the original test date of the cylinder.

(d) *Defects and attachments.* Cylinders must conform to the following:

(1) A cylinder may not be constructed of material with seams, cracks or laminations, or other injurious defects.

(2) Metal attachments to cylinders must have rounded or chamfered corners or must be protected in such a manner as to prevent the likelihood of causing puncture or damage to other hazardous materials packages. This requirement applies to anything temporarily or permanently attached to the cylinder, such as metal skids.

(e) *Safety devices.* Pressure relief devices and protection for valves, safety devices, and other connections, if applied, must be as required or authorized by the appropriate specification, and as required in §173.301 of this subchapter.

(f) *Markings.* Markings on a DOT Specification cylinder must conform to applicable requirements.

(1) Each cylinder must be marked with the following information:

(i) The DOT specification marking must appear first, followed immediately by the service pressure. For example, DOT-3A1800.

(ii) The serial number must be placed just below or immediately following the DOT specification marking.

(iii) A symbol (letters) must be placed just below, immediately before or following the serial number. Other variations in sequence of markings are authorized only when necessitated by a lack of space. The symbol and numbers must be those of the manufacturer. The symbol must be registered with the Associate Administrator; duplications are not authorized.

(iv) The inspector's official mark and date of test (such as 5–95 for May 1995) must be placed near the serial number. This information must be placed so that dates of subsequent tests can be easily added. An example of the markings prescribed in this paragraph (f)(1) is as follows:

DOT-3A1800
1234
XY
AB 5–95

Or;

DOT-3A1800–1234–XY
AB 5–95

Where:

DOT-3A = specification number
1800 = service pressure
1234 = serial number
XY = symbol of manufacturer
AB = inspector's mark
5–95 = date of test

(2) Additional required marking must be applied to the cylinder as follows:

(i) The word ''spun'' or ''plug'' must be placed near the DOT specification marking when an end closure in the finished cylinder has been welded by the spinning process, or effected by plugging.

(ii) As prescribed in specification 3HT (§ 178.44) or 3T (§ 178.45), if applicable.

(3) *Marking exceptions.* A DOT 3E cylinder is not required to be marked with an inspector's mark or a serial number.

(4) Unless otherwise specified in the applicable specification, the markings on each cylinder must be stamped plainly and permanently on the shoulder, top head, or neck.

(5) The size of each marking must be at least 0.25 inch or as space permits.

(6) Other markings are authorized provided they are made in low stress areas other than the side wall and are not of a size and depth that will create harmful stress concentrations. Such marks may not conflict with any DOT required markings.

(g) *Manufacturer's reports.* At or before the time of delivery to the purchaser, the cylinder manufacturer must have all completed certification documents listed in CGA C–11. The manufacturer of the cylinders must retain the reports required by this subpart for 15 years from the original test date of the cylinder.

[Amdt. 178–114, 61 FR 25942, May 23, 1996, as amended at 66 FR 45185, Aug. 28, 2001; 67 FR 51652, Aug. 8, 2002; 68 FR 75748, Dec. 31, 2003; 76 FR 43531, July 20, 2011]

§ 178.36 Specification 3A and 3AX seamless steel cylinders.

(a) *Type size and service pressure.* In addition to the requirements of § 178.35, cylinders must conform to the following:

(1) A DOT-3A cylinder is a seamless steel cylinder with a water capacity (nominal) not over 1,000 pounds and a service pressure of at least 150 psig.

(2) A DOT–3AX is a seamless steel cylinder with a water capacity not less than 1,000 pounds and a service pressure of at least 500 psig, conforming to the following requirements:

(i) Assuming the cylinder is to be supported horizontally at its two ends only and to be uniformly loaded over its entire length consisting of the weight per unit of length of the straight cylindrical portion filled with water and compressed to the specified test pressure; the sum of two times the maximum tensile stress in the bottom fibers due to bending, plus that in the same fibers (longitudinal stress), due to hydrostatic test may not exceed 80 percent of the minimum yield strength of the steel at such maximum stress. Wall thickness must be increased when necessary to meet the requirement.

(ii) To calculate the maximum longitudinal tensile stress due to bending, the following formula must be used:

$$S=Mc/I$$

(iii) To calculate the maximum longitudinal tensile stress due to hydrostatic test pressure, the following formula must be used:

$$S = A_1 P/A_2$$

where:

S = tensile stress—p.s.i.;
M = bending moment-inch pounds—$(wl^2)/8$;
w = weight per inch of cylinder filled with water;
l = length of cylinder-inches;
c = radius (D)/(2) of cylinder-inches;
I = moment of inertia—$0.04909\ (D^4 - d^4)$ inches fourth;
D = outside diameter-inches;
d = inside diameter-inches;
A_1 = internal area in cross section of cylinder-square inches;
A_2 = area of metal in cross section of cylinder-square inches;
P=hydrostatic test pressure-psig.

(b) *Steel.* Open-hearth or electric steel of uniform quality must be used. Content percent may not exceed the following: Carbon, 0.55; phosphorous, 0.045; sulphur, 0.050.

(c) *Identification of material.* Material must be identified by any suitable method, except that plates and billets for hot-drawn cylinders must be marked with the heat number.

(d) *Manufacture.* Cylinders must be manufactured using equipment and processes adequate to ensure that each cylinder produced conforms to the requirements of this subpart. No fissure or other defect is permitted that is likely to weaken the finished cylinder appreciably. A reasonably smooth and uniform surface finish is required. If not originally free from such defects, the surface may be machined or otherwise treated to eliminate these defects. The thickness of the bottoms of cylinders welded or formed by spinning is, under no condition, to be less than two times the minimum wall thickness of the cylindrical shell; such bottom thicknesses must be measured within an area bounded by a line representing

the points of contact between the cylinder and floor when the cylinder is in a vertical position.

(e) *Welding or brazing.* Welding or brazing for any purpose whatsoever is prohibited except as follows:

(1) Welding or brazing is authorized for the attachment of neckrings and footrings which are non-pressure parts and only to the tops and bottoms of cylinders having a service pressure of 500 psig or less. Cylinders, neckrings, and footrings must be made of weldable steel, the carbon content of which may not exceed 0.25 percent except in the case of 4130X steel which may be used with proper welding procedures.

(2) As permitted in paragraph (d) of this section.

(3) Cylinders used solely in anhydrous ammonia service may have a ½ inch diameter bar welded within their concave bottoms.

(f) *Wall thickness.* For cylinders with service pressure less than 900 psig, the wall stress may not exceed 24,000 psig. A minimum wall thickness of 0.100 inch is required for any cylinder over 5 inches outside diameter. Wall stress calculation must be made by using the following formula:

$$S = [P(1.3D^2+0.4d^2)]/(D^2-d^2)$$

Where:

S = wall stress in psi;
P = minimum test pressure prescribed for water jacket test or 450 psig whichever is the greater;
D = outside diameter in inches;
d = inside diameter in inches.

(g) *Heat treatment.* The completed cylinder must be uniformly and properly heat-treated prior to tests.

(h) *Openings in cylinders and connections (valves, fuse plugs, etc.) for those openings.* Threads are required on openings.

(1) Threads must be clean cut, even, without checks, and to gauge.

(2) Taper threads, when used, must be of length not less than as specified for American Standard taper pipe threads.

(3) Straight threads having at least 6 engaged threads are authorized. Straight threads must have a tight fit and calculated shear strength of at least 10 times the test pressure of the cylinder. Gaskets, adequate to prevent leakage, are required.

(i) *Hydrostatic test.* Each cylinder must successfully withstand a hydrostatic test, as follows:

(1) The test must be by water-jacket, or other suitable methods, operated so as to obtain accurate data. The pressure gauge must permit reading to an accuracy of 1 percent. The expansion gauge must permit reading of total expansion to an accuracy of either 1 percent or 0.1 cubic centimeter.

(2) Pressure must be maintained for at least 30 seconds and sufficiently longer to ensure complete expansion. Any internal pressure applied after heat-treatment and previous to the official test may not exceed 90 percent of the test pressure. If, due to failure of the test apparatus the test pressure cannot be maintained the test may be repeated at a pressure increased by 10 percent or 100 psig, whichever is the lower.

(3) Permanent, volumetric expansion may not exceed 10 percent of the total volumetric expansion at test pressure.

(4) Each cylinder must be tested to at least ⅔ times service pressure.

(j) *Flattening test.* A flattening test must be performed on one cylinder taken at random out of each lot of 200 or less, by placing the cylinder between wedge shaped knife edges having a 60° included angle, rounded to ½-inch radius. The longitudinal axis of the cylinder must be at a 90-degree angle to knife edges during the test. For lots of 30 or less, flattening tests are authorized to be made on a ring at least 8 inches long cut from each cylinder and subjected to same heat treatment as the finished cylinder.

(k) *Physical test.* A physical test must be conducted to determine yield strength, tensile strength, elongation, and reduction of area of material as follows:

(1) The test is required on 2 specimens cut from 1 cylinder taken at random out of each lot of 200 or less. For lots of 30 or less, physical tests are authorized to be made on a ring at least 8 inches long cut from each cylinder and subjected to same heat treatment as the finished cylinder.

(2) Specimens must conform to the following:

(i) Gauge length of 8 inches with a width of not over 1½ inches, a gauge

length of 2 inches with a width of not over 1½ inches, or a gauge length of at least 24 times thickness with width not over 6 times thickness is authorized when cylinder wall is not over 3/16 inch thick.

(ii) The specimen, exclusive of grip ends, may not be flattened. Grip ends may be flattened to within 1 inch of each end of the reduced section.

(iii) When size of cylinder does not permit securing straight specimens, the specimens may be taken in any location or direction and may be straightened or flattened cold, by pressure only, not by blows. When specimens are so taken and prepared, the inspector's report must show in connection with record of physical tests detailed information in regard to such specimens.

(iv) Heating of a specimen for any purpose is not authorized.

(3) The yield strength in tension must be the stress corresponding to a permanent strain of 0.2 percent of the gauge length. The following conditions apply:

(i) The yield strength must be determined by either the ''offset'' method or the ''extension under load'' method as prescribed in ASTM E 8 (IBR, see §171.7 of this subchapter).

(ii) In using the ''extension under load'' method, the total strain (or ''extension under load'') corresponding to the stress at which the 0.2-percent permanent strain occurs may be determined with sufficient accuracy by calculating the elastic extension of the gauge length under appropriate load and adding thereto 0.2 percent of the gauge length. Elastic extension calculations must be based on an elastic modulus of 30,000,000. In the event of controversy the entire stress-strain diagram must be plotted and the yield strength determined from the 0.2 percent offset.

(iii) For the purpose of strain measurement, the initial strain must be set while the specimen is under a stress of 12,000 psig and the strain indicator reading must be set at the calculated corresponding strain.

(iv) Cross-head speed of the testing machine may not exceed ⅛ inch per minute during yield strength determination.

(l) *Acceptable results for physical and flattening tests.* Either of the following is an acceptable result:

(1) An elongation at least 40 percent for a 2-inch gauge length or at least 20 percent in other cases and yield strength not over 73 percent of tensile strength. In this instance, the flattening test is not required.

(2) An elongation at least 20 percent for a 2-inch gauge length or 10 percent in other cases and a yield strength not over 73 percent of tensile strength. In this instance, the flattening test is required, without cracking, to 6 times the wall thickness.

(m) *Leakage test.* All spun cylinders and plugged cylinders must be tested for leakage by gas or air pressure after the bottom has been cleaned and is free from all moisture subject to the following conditions and limitations:

(1) Pressure, approximately the same as but no less than service pressure, must be applied to one side of the finished bottom over an area of at least 1/16 of the total area of the bottom but not less than ¾ inch in diameter, including the closure, for at least 1 minute, during which time the other side of the bottom exposed to pressure must be covered with water and closely examined for indications of leakage. Except as provided in paragraph (n) of this section, a cylinder that is leaking must be rejected.

(2) A spun cylinder is one in which an end closure in the finished cylinder has been welded by the spinning process.

(3) A plugged cylinder is one in which a permanent closure in the bottom of a finished cylinder has been effected by a plug.

(4) As a safety precaution, if the manufacturer elects to make this test before the hydrostatic test, the manufacturer should design the test apparatus so that the pressure is applied to the smallest area practicable, around the point of closure, and so as to use the smallest possible volume of air or gas.

(n) *Rejected cylinders.* Reheat treatment is authorized for rejected cylinders. Subsequent thereto, cylinders must pass all prescribed tests to be acceptable. Repair by welding or spinning

is not authorized. Spun cylinders rejected under the provisions of paragraph (m) of this section may be removed from the spun cylinder category by drilling to remove defective material, tapping and plugging.

[Amdt. 178–114, 61 FR 25942, May 23, 1996, as amended at 62 FR 51561, Oct. 1, 1997; 66 FR 45185, 45386–45387, Aug. 28, 2001; 67 FR 51652, Aug. 8, 2002; 68 FR 75748, Dec. 31, 2003; 73 FR 57006, Oct. 1, 2008]

§ 178.37 Specification 3AA and 3AAX seamless steel cylinders.

(a) *Type, size and service pressure.* In addition to the requirements of § 178.35, cylinders must conform to the following:

(1) A DOT-3AA cylinder is a seamless steel cylinder with a water capacity (nominal) of not over 1,000 pounds and a service pressure of at least 150 psig.

(2) A DOT-3AAX cylinder is a seamless steel cylinder with a water capacity of not less than 1,000 pounds and a service pressure of at least 500 psig, conforming to the following requirements:

(i) Assuming the cylinder is to be supported horizontally at its two ends only and to be uniformly loaded over its entire length consisting of the weight per unit of length of the straight cylindrical portion filled with water and compressed to the specified test pressure; the sum of two times the maximum tensile stress in the bottom fibers due to bending, plus that in the same fibers (longitudinal stress), due to hydrostatic test pressure may not exceed 80 percent of the minimum yield strength of the steel at such maximum stress. Wall thickness must be increased when necessary to meet the requirement.

(ii) To calculate the maximum tensile stress due to bending, the following formula must be used:

$$S = Mc/I$$

(iii) To calculate the maximum longitudinal tensile stress due to hydrostatic test pressure, the following formula must be used:

$$S = A^1P/A^2$$

Where:

S = tensile stress-p.s.i.;
M = bending moment-inch pounds $(wl^2)/8$;
w = weight per inch of cylinder filled with water;
l = length of cylinder-inches;
c = radius (D)/(2) of cylinder-inches;
I = moment of inertia-0.04909 $(D^4 - d^4)$ inches fourth;
D = outside diameter-inches;
d = inside diameter-inches;
A^1 = internal area in cross section of cylinder-square inches;
A^2 = area of metal in cross section of cylinder-square inches;
P = hydrostatic test pressure-psig.

(b) *Authorized steel.* Open-hearth, basic oxygen, or electric steel of uniform quality must be used. A heat of steel made under the specifications in table 1 of this paragraph (b), check chemical analysis of which is slightly out of the specified range, is acceptable, if satisfactory in all other respects, provided the tolerances shown in table 2 of this paragraph (b) are not exceeded. When a carbon-boron steel is used, a hardenability test must be performed on the first and last ingot of each heat of steel. The results of this test must be recorded on the Record of Chemical Analysis of Material for Cylinders required by § 178.35. This hardness test must be made 5/16-inch from the quenched end of the Jominy quench bar and the hardness must be at least Rc 33 and no more than Rc 53. The following chemical analyses are authorized:

TABLE 1—AUTHORIZED MATERIALS

Designation	4130X (percent) (see Note 1)	NE–8630 (percent) (see Note 1)	9115 (percent) (see Note 1)	9125 (percent) (see Note 1)	Carbon-boron (percent)	Inter- mediate manganese (percent)
Carbon	0.25/0.35	0.28/0.33	0.10/0.20	0.20/0.30	0.27–0.37	0.40 max.
Manganese	0.40/0.90	0.70/0.90	0.50/0.75	0.50/0.75	0.80–1.40	1.35/1.65.
Phosphorus	0.04 max	0.04 max	0.04 max	0.04 max	0.035 max	0.04 max.
Sulfur	0.05 max	0.04 max	0.04 max	0.04 max	0.045 max	0.05 max.
Silicon	0.15/0.35	0.20/0.35	0.60/0.90	0.60/0.90	0.3 max.	0.10/0.30.
Chromium	0.80/1.10	0.40/0.60	0.50/0.65	0.50/0.65.		
Molybdenum	0.15/0.25	0.15/0.25				
Zirconium			0.05/0.15	0.05/0.15		

TABLE 1—AUTHORIZED MATERIALS—Continued

Designation	4130X (percent) (see Note 1)	NE–8630 (percent) (see Note 1)	9115 (percent) (see Note 1)	9125 (percent) (see Note 1)	Carbon-boron (percent)	Inter- mediate manganese (percent)
Nickel		0.40/0.70.				
Boron					0.0005/0.003.	

NOTE 1: This designation may not be restrictive and the commercial steel is limited in analysis as shown in this table.

TABLE 2—CHECK ANALYSIS TOLERANCES

Element	Limit or maximum specified (percent)	Tolerance (percent) over the maximum limit or under the minimum limit	
		Under minimum limit	Over maximum limit
Carbon	To 0.15 incl	0.02	0.03
	Over 0.15 to 0.40 incl	.03	.04
Manganese	To 0.60 incl	.03	.03
	Over 0.60 to 1.15 incl	0.04	0.04
	Over 1.15 to 2.50 incl	0.05	0.05
Phosphorus[1]	All ranges		.01
Sulphur	All ranges		.01
Silicon	To 0.30 incl	.02	.03
	Over 0.30 to 1.00 incl	.05	.05
Nickel	To 1.00 incl	.03	.03
Chromium	To 0.90 incl	.03	.03
	0.90 to 2.90 incl	.05	.05
Molybdenum	To 0.20 incl	.01	.01
	Over 0.20 to 0.40	.02	.02
Zirconium	All ranges	.01	.05

[1] Rephosphorized steels not subject to check analysis for phosphorus.

(c) *Identification of material.* Material must be identified by any suitable method except that plates and billets for hot-drawn cylinders must be marked with the heat number.

(d) *Manufacture.* Cylinders must be manufactured using equipment and processes adequate to ensure that each cylinder produced conforms to the requirements of this subpart. No fissure or other defects is permitted that is likely to weaken the finished cylinder appreciably. A reasonably smooth and uniform surface finish is required. If not originally free from such defects, the surface may be machined or otherwise treated to eliminate these defects. The thickness of the bottoms of cylinders welded or formed by spinning is, under no condition, to be less than two times the minimum wall thickness of the cylindrical shell; such bottom thicknesses must be measured within an area bounded by a line representing the points of contact between the cylinder and floor when the cylinder is in a vertical position.

(e) *Welding or brazing.* Welding or brazing for any purpose whatsoever is prohibited except as follows:

(1) Welding or brazing is authorized for the attachment of neckrings and footrings which are non-pressure parts, and only to the tops and bottoms of cylinders having a service pressure of 500 psig or less. Cylinders, neckrings, and footrings must be made of weldable steel, the carbon content of which may not exceed 0.25 percent except in the case of 4130X steel which may be used with proper welding procedure.

(2) As permitted in paragraph (d) of this section.

(f) *Wall thickness.* The thickness of each cylinder must conform to the following:

(1) For cylinders with a service pressure of less than 900 psig, the wall stress may not exceed 24,000 psi. A minimum wall thickness of 0.100 inch is required for any cylinder with an outside diameter of over 5 inches.

(2) For cylinders with service pressure of 900 psig or more the minimum wall must be such that the wall stress at the minimum specified test pressure

may not exceed 67 percent of the minimum tensile strength of the steel as determined from the physical tests required in paragraphs (k) and (l) of this section and must be not over 70,000 psi.

(3) Calculation must be made by the formula:

$$S = [P(1.3D^2+0.4d^2)]/(D^2-d^2)$$

Where:

S = wall stress in psi;
P = minimum test pressure prescribed for water jacket test or 450 psig whichever is the greater;
D = outside diameter in inches;
d = inside diameter in inches.

(g) *Heat treatment.* The completed cylinders must be uniformly and properly heat treated prior to tests. Heat treatment of cylinders of the authorized analyses must be as follows:

(1) All cylinders must be quenched by oil, or other suitable medium except as provided in paragraph (g)(5) of this section.

(2) The steel temperature on quenching must be that recommended for the steel analysis, but may not exceed 1750 °F.

(3) All steels must be tempered at a temperature most suitable for that steel.

(4) The minimum tempering temperature may not be less than 1000 °F except as noted in paragraph (g)(6) of this section.

(5) Steel 4130X may be normalized at a temperature of 1650 °F instead of being quenched and cylinders so normalized need not be tempered.

(6) Intermediate manganese steels may be tempered at temperatures not less than 1150 °F., and after heat treating each cylinder must be submitted to a magnetic test to detect the presence of quenching cracks. Cracked cylinders must be rejected and destroyed.

(7) Except as otherwise provided in paragraph (g)(6) of this section, all cylinders, if water quenched or quenched with a liquid producing a cooling rate in excess of 80 percent of the cooling rate of water, must be inspected by the magnetic particle, dye penetrant or ultrasonic method to detect the presence of quenching cracks. Any cylinder designed to the requirements for specification 3AA and found to have a quenching crack must be rejected and may not be requalified. Cylinders designed to the requirements for specification 3AAX and found to have cracks must have cracks removed to sound metal by mechanical means. Such specification 3AAX cylinders will be acceptable if the repaired area is subsequently examined to assure no defect, and it is determined that design thickness requirements are met.

(h) *Openings in cylinders and connections (valves, fuse plugs, etc.) for those openings.* Threads are required on openings.

(1) Threads must be clean cut, even, without checks, and to gauge.

(2) Taper threads, when used, must be of a length not less than as specified for American Standard taper pipe threads.

(3) Straight threads having at least 6 engaged threads are authorized. Straight threads must have a tight fit and a calculated shear strength of at least 10 times the test pressure of the cylinder. Gaskets, adequate to prevent leakage, are required.

(i) *Hydrostatic test.* Each cylinder must successfully withstand a hydrostatic test as follows:

(1) The test must be by water-jacket, or other suitable method, operated so as to obtain accurate data. The pressure gauge must permit reading to an accuracy of 1 percent. The expansion gauge must permit reading of total expansion to an accuracy of either 1 percent or 0.1 cubic centimeter.

(2) Pressure must be maintained for at least 30 seconds and sufficiently longer to ensure complete expansion. Any internal pressure applied after heat-treatment and previous to the official test may not exceed 90 percent of the test pressure. If, due to failure of the test apparatus, the test pressure cannot be maintained, the test may be repeated at a pressure increased by 10 percent or 100 psig, whichever is the lower.

(3) Permanent volumetric expansion may not exceed 10 percent of total volumetric expansion at test pressure.

(4) Each cylinder must be tested to at least ⅔ times the service pressure.

(j) *Flattening test.* A flattening test must be performed on one cylinder taken at random out of each lot of 200 or less, by placing the cylinder between

wedge shaped knife edges having a 60° included angle, rounded to ½-inch radius. The longitudinal axis of the cylinder must be at a 90-degree angle to knife edges during the test. For lots of 30 or less, flattening tests are authorized to be made on a ring at least 8 inches long cut from each cylinder and subjected to the same heat treatment as the finished cylinder. Cylinders may be subjected to a bend test in lieu of the flattening test. Two bend test specimens must be taken in accordance with ISO 9809–1 or ASTM E 290 (IBR, *see* § 171.7 of this subchapter), and must be subjected to the bend test specified therein.

(k) *Physical test.* A physical test must be conducted to determine yield strength, tensile strength, elongation, and reduction of area of material as follows:

(1) The test is required on 2 specimens cut from 1 cylinder taken at random out of each lot of 200 or less. For lots of 30 or less, physical tests are authorized to be made on a ring at least 8 inches long cut from each cylinder and subjected to the same heat treatment as the finished cylinder.

(2) Specimens must conform to the following:

(i) Gauge length of 8 inches with a width of not over 1½ inches, a gauge length of 2 inches with a width of not over 1½ inches, or a gauge length of at least 24 times the thickness with width not over 6 times thickness when the thickness of the cylinder wall is not over 3/16 inch.

(ii) The specimen, exclusive of grip ends, may not be flattened. Grip ends may be flattened to within 1 inch of each end of the reduced section.

(iii) When size of cylinder does not permit securing straight specimens, the specimens may be taken in any location or direction and may be straightened or flattened cold, by pressure only, not by blows. When specimens are so taken and prepared, the inspector's report must show in connection with record of physical tests detailed information in regard to such specimens.

(iv) Heating of a specimen for any purpose is not authorized.

(3) The yield strength in tension must be the stress corresponding to a permanent strain of 0.2 percent of the gauge length. The following conditions apply:

(i) The yield strength must be determined by either the ''offset'' method or the ''extension under load'' method as prescribed in ASTM E 8 (IBR, see § 171.7 of this subchapter).

(ii) In using the ''extension under load'' method, the total strain (or ''extension under load'') corresponding to the stress at which the 0.2 percent permanent strain occurs may be determined with sufficient accuracy by calculating the elastic extension of the gauge length under appropriate load and adding thereto 0.2 percent of the gauge length. Elastic extension calculations must be based on an elastic modulus of 30,000,000. In the event of controversy, the entire stress-strain diagram must be plotted and the yield strength determined from the 0.2 percent offset.

(iii) For the purpose of strain measurement, the initial strain must be set while the specimen is under a stress of 12,000 psi, the strain indicator reading being set at the calculated corresponding strain.

(iv) Cross-head speed of the testing machine may not exceed ⅛ inch per minute during yield strength determination.

(l) *Acceptable results for physical, flattening and bend tests.* An acceptable result for physical and flattening tests is elongation of at least 20 percent for 2 inches of gauge length or at least 10 percent in other cases. Flattening is required, without cracking, to 6 times the wall thickness of the cylinder. An acceptable result for the alternative bend test is no crack when the cylinder is bent inward around the mandrel until the interior edges are not further apart than the diameter of the mandrel.

(m) *Leakage test.* All spun cylinders and plugged cylinders must be tested for leakage by gas or air pressure after the bottom has been cleaned and is free from all moisture. Pressure, approximately the same as but no less than the service pressure, must be applied to one side of the finished bottom over an area of at least 1/16 of the total area of the bottom but not less than ¾ inch in diameter, including the closure, for at

least one minute, during which time the other side of the bottom exposed to pressure must be covered with water and closely examined for indications of leakage. Except as provided in paragraph (n) of this section, a cylinder must be rejected if there is any leaking.

(1) A spun cylinder is one in which an end closure in the finished cylinder has been welded by the spinning process.

(2) A plugged cylinder is one in which a permanent closure in the bottom of a finished cylinder has been effected by a plug.

(3) As a safety precaution, if the manufacturer elects to make this test before the hydrostatic test, the manufacturer should design the test apparatus so that the pressure is applied to the smallest area practicable, around the point of closure, and so as to use the smallest possible volume of air or gas.

(n) *Rejected cylinders*. Reheat treatment is authorized for rejected cylinders. Subsequent thereto, cylinders must pass all prescribed tests to be acceptable. Repair by welding or spinning is not authorized. Spun cylinders rejected under the provision of paragraph (m) of this section may be removed from the spun cylinder category by drilling to remove defective material, tapping and plugging.

[Amdt. 178–114, 61 FR 25942, May 23, 1996, as amended at 65 FR 58631, Sept. 29, 2000; 66 FR 45386–45387, Aug. 28, 2001; 67 FR 51652, Aug. 8, 2002; 68 FR 75748, Dec. 31, 2003; 76 FR 43531, July 20, 2011]

§ 178.38 Specification 3B seamless steel cylinders.

(a) *Type, size, and service pressure*. A DOT 3B cylinder is seamless steel cylinder with a water capacity (nominal) of not over 1,000 pounds and a service pressure of at least 150 to not over 500 psig.

(b) *Steel*. Open-hearth or electric steel of uniform quality must be used. Content percent may not exceed the following: carbon, 0.55; phosphorus, 0.045; sulphur, 0.050.

(c) *Identification of material*. Material must be identified by any suitable method except that plates and billets for hot-drawn cylinders must be marked with the heat number.

(d) *Manufacture*. Cylinders must be manufactured using equipment and processes adequate to ensure that each cylinder produced conforms to the requirements of this subpart. No fissure or other defect is permitted that is likely to weaken the finished cylinder appreciably. A reasonably smooth and uniform surface finish is required. If not originally free from such defects, the surface may be machined or otherwise treated to eliminate these defects. The thickness of the bottoms of cylinders welded or formed by spinning is, under no condition, to be less than two times the minimum wall thickness of the cylindrical shell; such bottom thicknesses to be measured within an area bounded by a line representing the points of contact between the cylinder and floor when the cylinder is in a vertical position.

(e) *Welding or brazing*. Welding or brazing for any purpose whatsoever is prohibited except as follows:

(1) Welding or brazing is authorized for the attachment of neckrings and footrings which are non-pressure parts, and only to the tops and bottoms of cylinders having a service pressure of 500 psig or less. Cylinders, neckrings, and footrings must be made of weldable steel, carbon content of which may not exceed 0.25 percent except in the case of 4130X steel which may be used with proper welding procedure.

(2) As permitted in paragraph (d) of this section.

(f) *Wall thickness*. The wall stress may not exceed 24,000 psi. The minimum wall thickness is 0.090 inch for any cylinder with an outside diameter of 6 inches. Calculation must be made by the following formula:

$$S = [P(1.3D^2+0.4d^2)]/(D^2-d^2)$$

Where:

S = wall stress in psi;
P = at least two times service pressure or 450 psig, whichever is the greater;
D = outside diameter in inches;
d = inside diameter in inches.

(g) *Heat treatment*. The completed cylinders must be uniformly and properly heat-treated prior to tests.

(h) *Openings in cylinders and connections (valves, fuse plugs, etc.) for those openings*. Threads, conforming to the following, are required on all openings:

(1) Threads must be clean cut, even, without checks, and to gauge.

(2) Taper threads when used, must be of a length not less than as specified for American Standard taper pipe threads.

(3) Straight threads having at least 4 engaged threads are authorized. Straight threads must have a tight fit, and calculated shear strength at least 10 times the test pressure of the cylinder. Gaskets, adequate to prevent leakage, are required.

(i) *Hydrostatic test.* Cylinders must successfully withstand a hydrostatic test, as follows:

(1) The test must be by water-jacket, or other suitable method, operated so as to obtain accurate data. The pressure gauge must permit reading to an accuracy of 1 percent. The expansion gauge must permit reading of total expansion to an accuracy either of 1 percent or 0.1 cubic centimeter.

(2) Pressure must be maintained for at least 30 seconds and sufficiently longer to insure complete expansion. Any internal pressure applied after heat-treatment and previous to the official test may not exceed 90 percent of the test pressure. If, due to failure of the test apparatus, the test pressure cannot be maintained, the test may be repeated at a pressure increased by 10 percent or 100 psig, whichever is the lower.

(3) Permanent volumetric expansion may not exceed 10 percent of total volumetric expansion at test pressure.

(4) Cylinders must be tested as follows:

(i) Each cylinder; to at least 2 times service pressure; or

(ii) 1 cylinder out of each lot of 200 or less; to at least 3 times service pressure. Others must be examined under pressure of 2 times service pressure and show no defect.

(j) *Flattening test.* A flattening test must be performed on one cylinder taken at random out of each lot of 200 or less, by placing the cylinder between wedge shaped knife edges having a 60° included angle, rounded to ½-inch radius. The longitudinal axis of the cylinder must be at a 90-degree angle to knife edges during the test. For lots of 30 or less, flattening tests are authorized to be made on a ring at least 8 inches long cut from each cylinder and subjected to same heat treatment as the finished cylinder.

(k) *Physical test.* A physical test must be conducted to determine yield strength, tensile strength, elongation, and reduction of area of material, as follows:

(1) The test is required on 2 specimens cut from 1 cylinder taken at random out of each lot of 200 or less. For lots of 30 or less, physical tests are authorized to be made on a ring at least 8 inches long cut from each cylinder and subjected to same heat treatment as the finished cylinder.

(2) Specimens must conform to the following:

(i) Gauge length of 8 inches with a width of not over 1½ inches; or a gauge length of 2 inches with a width of not over 1½ inches; or a gauge length at least 24 times the thickness with a width not over 6 times thickness is authorized when a cylinder wall is not over 3/16 inch thick.

(ii) The specimen, exclusive of grip ends, may not be flattened. Grip ends may be flattened to within one inch of each end of the reduced section.

(iii) When size of cylinder does not permit securing straight specimens, the specimens may be taken in any location or direction and may be straightened or flattened cold, by pressure only, not by blows. When specimens are so taken and prepared, the inspector's report must show in connection with record of physical tests detailed information in regard to such specimens.

(iv) Heating of a specimen for any purpose is not authorized.

(3) The yield strength in tension must be the stress corresponding to a permanent strain of 0.2 percent of the gauge length. The following conditions apply:

(i) The yield strength must be determined by either the ''offset'' method or the ''extension under load'' method as prescribed in ASTM E 8 (IBR, see §171.7 of this subchapter).

(ii) In using the ''extension under load'' method, the total strain (or ''extension under load'') corresponding to

the stress at which the 0.2 percent permanent strain occurs may be determined with sufficient accuracy by calculating the elastic extension of the gauge length under appropriate load and adding thereto 0.2 percent of the gauge length. Elastic extension calculations must be based on an elastic modulus of 30,000,000. In the event of controversy, the entire stress-strain diagram must be plotted and the yield strength determined from the 0.2 percent offset.

(iii) For the purpose of strain measurement, the initial strain must be set while the specimen is under a stress of 12,000 psi, and the strain indicator reading being set at the calculated corresponding strain.

(iv) Cross-head speed of the testing machine may not exceed ⅛ inch per minute during yield strength determination.

(l) *Acceptable results for physical and flattening tests.* Either of the following is an acceptable result:

(1) An elongation of at least 40 percent for a 2-inch gauge length or at least 20 percent in other cases and yield strength not over 73 percent of tensile strength. In this instance, the flattening test is not required.

(2) An elongation of at least 20 percent for a 2-inch gauge length or 10 percent in other cases and yield strength not over 73 percent of tensile strength. Flattening is required, without cracking, to 6 times the wall thickness.

(m) *Leakage test.* All spun cylinders and plugged cylinders must be tested for leakage by gas or air pressure after the bottom has been cleaned and is free from all moisture, subject to the following conditions and limitations:

(1) Pressure, approximately the same as but no less than service pressure, must be applied to one side of the finished bottom over an area of at least 1/16 of the total area of the bottom but not less than ¾ inch in diameter, including the closure, for at least one minute, during which time the other side of the bottom exposed to pressure must be covered with water and closely examined for indications of leakage. Except as provided in paragraph (n) of this section, a cylinder must be rejected if there is any leaking.

(2) A spun cylinder is one in which an end closure in the finished cylinder has been welded by the spinning process.

(3) A plugged cylinder is one in which a permanent closure in the bottom of a finished cylinder has been effected by a plug.

(4) As a safety precaution, if the manufacturer elects to make this test before the hydrostatic test, he should design his apparatus so that the pressure is applied to the smallest area practicable, around the point of closure, and so as to use the smallest possible volume of air or gas.

(n) *Rejected cylinders.* Reheat treatment of rejected cylinders is authorized. Subsequent thereto, cylinders must pass all prescribed tests to be acceptable. Repair by welding or spinning is not authorized. Spun cylinders rejected under the provisions of paragraph (m) of this section may be removed from the spun cylinder category by drilling to remove defective material, tapping and plugging.

(o) *Marking.* Markings may be stamped into the sidewalls of cylinders having a service pressure of 150 psig if all of the following conditions are met:

(1) Wall stress at test pressure may not exceed 24,000 psi.

(2) Minimum wall thickness must be not less than 0.090 inch.

(3) Depth of stamping must be no greater than 15 percent of the minimum wall thickness, but may not exceed 0.015 inch.

(4) Maximum outside diameter of cylinder may not exceed 5 inches.

(5) Carbon content of cylinder may not exceed 0.25 percent. If the carbon content exceeds 0.25 percent, the complete cylinder must be normalized after stamping.

(6) Stamping must be adjacent to the top head.

[Amdt. 178–114, 61 FR 25942, May 23, 1996, as amended by 66 FR 45185, 45386–45388, Aug. 28, 2001; 67 FR 51652, Aug. 8, 2002; 68 FR 75748, Dec. 31, 2003]

§ 178.39 Specification 3BN seamless nickel cylinders.

(a) *Type, size and service pressure.* A DOT 3BN cylinder is a seamless nickel cylinder with a water capacity (nominal) not over 125 pounds water capacity

(nominal) and a service pressure at least 150 to not over 500 psig.

(b) *Nickel.* The percentage of nickel plus cobalt must be at least 99.0 percent.

(c) *Identification of material.* The material must be identified by any suitable method except that plates and billets for hot-drawn cylinders must be marked with the heat number.

(d) *Manufacture.* Cylinders must be manufactured using equipment and processes adequate to ensure that each cylinder produced conforms to the requirements of this subpart. No defect is permitted that is likely to weaken the finished cylinder appreciably. A reasonably smooth and uniform surface finish is required. Cylinders closed in by spinning process are not authorized.

(e) *Welding or brazing.* Welding or brazing for any purpose whatsoever is prohibited except that welding is authorized for the attachment of neckrings and footrings which are nonpressure parts, and only to the tops and bottoms of cylinders. Neckrings and footrings must be of weldable material, the carbon content of which may not exceed 0.25 percent. Nickel welding rod must be used.

(f) *Wall thickness.* The wall stress may not exceed 15,000 psi. A minimum wall thickness of 0.100 inch is required for any cylinder over 5 inches in outside diameter. Wall stress calculation must be made by using the following formula:

$$S = [P(1.3D^2 + 0.4d^2)] / (D^2 - d^2)$$

Where:

S = wall stress in psi;
P = minimum test pressure prescribed for water jacket test or 450 psig whichever is the greater;
D = outside diameter in inches;
d = inside diameter in inches.

(g) *Heat treatment.* The completed cylinders must be uniformly and properly heat-treated prior to tests.

(h) *Openings in cylinders and connections (valves, fuse plugs, etc.) for those openings.* Threads conforming to the following are required on openings:

(1) Threads must be clean cut, even, without checks, and to gauge.

(2) Taper threads, when used, to be of length not less than as specified for American Standard taper pipe threads.

(3) Straight threads having at least 6 engaged threads are authorized. Straight threads must have a tight fit and a calculated shear strength of at least 10 times the test pressure of the cylinder. Gaskets, adequate to prevent leakage, are required.

(i) *Hydrostatic test.* Each cylinder must successfully withstand a hydrostatic test, as follows:

(1) The test must be by water-jacket, or other suitable method, operated so as to obtain accurate data. The pressure gauge must permit reading to an accuracy of 1 percent. The expansion gauge must permit reading of total expansion to an accuracy either of 1 percent or 0.1 cubic centimeter.

(2) Pressure must be maintained for at least 30 seconds and sufficiently longer to ensure complete expansion. Any internal pressure applied after heat-treatment and previous to the official test may not exceed 90 percent of the test pressure. If, due to failure of the test apparatus, the test pressure cannot be maintained, the test may be repeated at a pressure increased by 10 percent or 100 psig, whichever is the lower.

(3) Permanent volumetric expansion may not exceed 10 percent of total volumetric expansion at test pressure.

(4) Each cylinder must be tested to at least 2 times service pressure.

(j) *Flattening test.* A flattening test must be performed on one cylinder taken at random out of each lot of 200 or less, by placing the cylinder between wedge shaped knife edges having a 60° included angle, rounded to ½-inch radius. The longitudinal axis of the cylinder must be at a 90-degree angle to knife edges during the test. For lots of 30 or less, flattening tests are authorized to be made on a ring at least 8 inches long cut from each cylinder and subjected to same heat treatment as the finished cylinder.

(k) *Physical test.* A physical test must be conducted to determine yield strength, tensile strength, elongation, and reduction of area of material, as follows:

(1) The test is required on 2 specimens cut from 1 cylinder taken at random out of each lot of 200 or less. For lots of 30 or less, physical tests are authorized to be made on a ring at least

8 inches long cut from each cylinder and subjected to same heat treatment as the finished cylinder.

(2) Specimens must conform to the following:

(i) A gauge length of 8 inches with a width of not over 1½ inches, a gauge length of 2 inches with a width of not over 1½ inches, or a gauge length of at least 24 times the thickness with a width not over 6 times thickness is authorized when a cylinder wall is not over 3/16 inch thick.

(ii) The specimen, exclusive of grip ends, may not be flattened. Grip ends may be flattened to within one inch of each end of the reduced section.

(iii) When size of cylinder does not permit securing straight specimens, the specimens may be taken in any location or direction and may be straightened or flattened cold, by pressure only, not by blows. When specimens are so taken and prepared, the inspector's report must show in connection with record of physical tests detailed information in regard to such specimens.

(iv) Heating of a specimen for any purpose is not authorized.

(3) The yield strength in tension must be the stress corresponding to a permanent strain of 0.2 percent of the gauge length. The following conditions apply:

(i) The yield strength must be determined by either the ''offset'' method or the ''extension under load'' method as prescribed in ASTM E 8 (IBR, see §171.7 of this subchapter).

(ii) In using the ''extension under load'' method, the total strain (or ''extension under load'') corresponding to the stress at which the 0.2 percent permanent strain occurs may be determined with sufficient accuracy by calculating the elastic extension of the gauge length under appropriate load and adding thereto 0.2 percent of the gauge length. Elastic extension calculations must be based on an elastic modulus of 30,000,000. In the event of controversy, the entire stress-strain diagram must be plotted and the yield strength determined from the 0.2 percent offset.

(iii) For the purpose of strain measurement, the initial strain must be set while the specimen is under a stress of 12,000 psi, and the strain indicator reading must be set at the calculated corresponding strain.

(iv) Cross-head speed of the testing machine may not exceed ⅛ inch per minute during yield strength determination.

(l) *Acceptable results for physical and flattening tests.* Either of the following is an acceptable result:

(1) An elongation of at least 40 percent for a 2 inch gauge length or at least 20 percent in other cases and yield point not over 50 percent of tensile strength. In this instance, the flattening test is not required.

(2) An elongation of at least 20 percent for a 2 inch gauge length or 10 percent in other cases and a yield point not over 50 percent of tensile strength. Flattening is required, without cracking, to 6 times the wall thickness.

(m) *Rejected cylinders.* Reheat treatment is authorized for rejected cylinders. Subsequent thereto, cylinders must pass all prescribed tests to be acceptable. Repair by welding is not authorized.

[Amdt. 178–114, 61 FR 25942, May 23, 1996, as amended by 66 FR 45185, 45386, 45388, Aug. 28, 2001; 67 FR 51652, Aug. 8, 2002; 68 FR 75748, Dec. 31, 2003]

§ 178.42 Specification 3E seamless steel cylinders.

(a) *Type, size, and service pressure.* A DOT 3E cylinder is a seamless steel cylinder with an outside diameter not greater than 2 inches nominal, a length less than 2 feet and a service pressure of 1,800 psig.

(b) *Steel.* Open-hearth or electric steel of uniform quality must be used. Content percent may not exceed the following: Carbon, 0.55; phosphorus, 0.045; sulphur, 0.050.

(c) *Identification of steel.* Materials must be identified by any suitable method.

(d) *Manufacture.* Cylinders must be manufactured by best appliances and methods. No defect is permitted that is likely to weaken the finished cylinder appreciably. A reasonably smooth and uniform surface finish is required. The thickness of the spun bottom is, under no condition, to be less than two times the minimum wall thickness of the cylindrical shell; such bottom thickness

must be measured within an area bounded by a line representing the points of contact between the cylinder and floor when the cylinder is in a vertical position.

(e) *Openings in cylinders and connections (valves, fuse plugs, etc.) for those openings.* Threads conforming to the following are required on openings.

(1) Threads must be clean cut, even, without checks, and to gauge.

(2) Taper threads, when used, must be of length not less than as specified for American Standard taper pipe threads.

(3) Straight threads having at least 4 engaged threads are authorized. Straight threads must have a tight fit and a calculated shear strength of at least 10 times the test pressure of the cylinder. Gaskets, adequate to prevent leakage, are required.

(f) *Hydrostatic test.* Cylinders must be tested as follows:

(1) One cylinder out of each lot of 500 or less must be subjected to a hydrostatic pressure of 6,000 psig or higher.

(2) The cylinder referred to in paragraph (f)(1) of this section must burst at a pressure higher than 6,000 psig without fragmenting or otherwise showing lack of ductility, or must hold a pressure of 12,000 psig for 30 seconds without bursting. In which case, it must be subjected to a flattening test without cracking to six times wall thickness between knife edges, wedge shaped 60 degree angle, rounded out to a ½ inch radius. The inspector's report must be suitably changed to show results of latter alternate and flattening test.

(3) Other cylinders must be examined under pressure of at least 3,000 psig and not to exceed 4,500 psig and show no defect. Cylinders tested at a pressure in excess of 3,600 psig must burst at a pressure higher than 7,500 psig when tested as specified in paragraph (f)(2) of this section. The pressure must be maintained for at least 30 seconds and sufficiently longer to ensure complete examination.

(g) *Leakage test.* All spun cylinders and plugged cylinders must be tested for leakage by gas or air pressure after the bottom has been cleaned and is free from all moisture subject to the following conditions and limitations:

(1) A pressure, approximately the same as but not less than the service pressure, must be applied to one side of the finished bottom over an area of at least 1/16 of the total area of the bottom but not less than ¾ inch in diameter, including the closure, for at least one minute, during which time the other side of the bottom exposed to pressure must be covered with water and closely examined for indications of leakage. Accept as provided in paragraph (h) of this section, a cylinder must be rejected if there is any leakage.

(2) A spun cylinder is one in which an end closure in the finished cylinder has been welded by the spinning process.

(3) A plugged cylinder is one in which a permanent closure in the bottom of a finished cylinder has been effected by a plug.

(4) As a safety precaution, if the manufacturer elects to make this test before the hydrostatic test, the manufacturer shall design the test apparatus so that the pressure is applied to the smallest area practicable, around the point of closure, and so as to use the smallest possible volume of air or gas.

(h) *Rejected cylinders.* Reheat treatment is authorized for rejected cylinders. Subsequent thereto, cylinders must pass all prescribed tests to be acceptable. Repair by welding or spinning is not authorized. Spun cylinders rejected under the provisions of paragraph (g) of this section may be removed from the spun cylinder category by drilling to remove defective material, tapping and plugging.

(i) *Marking.* Markings required by § 178.35 must be stamped plainly and permanently on the shoulder, top head, neck or sidewall of each cylinder.

[Amdt. 178–114, 61 FR 25942, May 23, 1996, as amended by 66 FR 45386, Aug. 28, 2001]

§ 178.44 Specification 3HT seamless steel cylinders for aircraft use.

(a) *Type, size and service pressure.* A DOT 3HT cylinder is a seamless steel cylinder with a water capacity (nominal) of not over 150 pounds and a service pressure of at least 900 psig.

(b) *Authorized steel.* Open hearth or electric furnace steel of uniform quality must be used. A heat of steel made under the specifications listed in Table

1 in this paragraph (b), a check chemical analysis that is slightly out of the specified range is acceptable, if satisfactory in all other respects, provided the tolerances shown in Table 2 in this paragraph (b) are not exceeded. The maximum grain size shall be 6 or finer. The grain size must be determined in accordance with ASTM E 112–88 (IBR, see §171.7 of this subchapter). Steel of the following chemical analysis is authorized:

TABLE 1—AUTHORIZED MATERIALS

Designation	AISI 4130 (percent)
Carbon	0.28/0.33
Manganese	0.40/0.60
Phosphorus	0.040 maximum
Sulfur	0.040 maximum
Silicon	0.15/0.35
Chromium	0.80/1.10
Molybdenum	0.15/0.25

TABLE 2—CHECK ANALYSIS TOLERANCES

Element	Limit or maximum specified (percent)	Tolerance (percent) over the maximum limit or under the minimum limit	
		Under minimum limit	Over maximum limit
Carbon	Over 0.15 to 0.40 incl	.03	.04
Manganese	To 0.60 incl	.03	.03
Phosphorus[1]	All ranges	.....	.01
Sulphur	All ranges	.....	.01
Silicon	To 0.30 incl	.02	.03
	Over 0.30 to 1.00 incl	.05	.05
Chromium	To 0.90 incl	.03	.03
	Over 0.90 to 2.10 incl	.05	.05
Molybdenum	To 0.20 incl	.01	.01
	Over 0.20 to 0.40 incl	.02	.02

[1] Rephosphorized steels not subject to check analysis for phosphorus.

(c) *Identification of material.* Material must be identified by any suitable method. Steel stamping of heat identifications may not be made in any area which will eventually become the side wall of the cylinder. Depth of stamping may not encroach upon the minimum prescribed wall thickness of the cylinder.

(d) *Manufacture.* Cylinders must be manufactured using equipment and processes adequate to ensure that each cylinder produced conforms to the requirements of this subpart. No fissure or other defect is permitted that is likely to weaken the finished container appreciably. The general surface finish may not exceed a roughness of 250 RMS. Individual irregularities such as draw marks, scratches, pits, etc., should be held to a minimum consistent with good high stress pressure vessel manufacturing practices. If the cylinder is not originally free of such defects or does not meet the finish requirements, the surface may be machined or otherwise treated to eliminate these defects. The point of closure of cylinders closed by spinning may not be less than two times the prescribed wall thickness of the cylindrical shell. The cylinder end contour must be hemispherical or ellipsoidal with a ratio of major-to-minor axis not exceeding two to one and with the concave side to pressure.

(e) *Welding or brazing.* Welding or brazing for any purpose whatsoever is prohibited, except that welding by spinning is permitted to close the bottom of spun cylinders. Machining or grinding to produce proper surface finish at point of closure is required.

(f) *Wall thickness.* (1) Minimum wall thickness for any cylinder must be 0.050 inch. The minimum wall thickness must be such that the wall stress at the minimum specified test pressure may not exceed 75 percent of the minimum tensile strength of the steel as determined from the physical tests required in paragraph (m) of this section and may not be over 105,000 psi.

(2) Calculations must be made by the formula:

$$S = [P(1.3D^2 + 0.4d^2)] / (D^2 - d^2)$$

Where:

S = Wall stress in psi;
P = Minimum test pressure prescribed for water jacket test;
D = Outside diameter in inches;
d = Inside diameter in inches.

(3) Wall thickness of hemispherical bottoms only permitted to 90 percent of minimum wall thickness of cylinder sidewall but may not be less than 0.050 inch. In all other cases, thickness to be no less than prescribed minimum wall.

(g) *Heat treatment.* The completed cylinders must be uniformly and properly heated prior to tests. Heat treatment of the cylinders of the authorized analysis must be as follows:

(1) All cylinders must be quenched by oil, or other suitable medium.

(2) The steel temperature on quenching must be that recommended for the steel analysis, but may not exceed 1750 °F.

(3) The steel must be tempered at a temperature most suitable for the particular steel analysis but not less than 850 °F.

(4) All cylinders must be inspected by the magnetic particle or dye penetrant method to detect the presence of quenching cracks. Any cylinder found to have a quenching crack must be rejected and may not be requalified.

(h) *Openings in cylinders and connections (valves, fuse plugs, etc.) for those openings.* Threads conforming to the following are required on openings:

(1) Threads must be clean cut, even, without cracks, and to gauge.

(2) Taper threads, when used, must be of length not less than as specified for National Gas Tapered Thread (NGT) as required by American Standard Compressed Gas Cylinder Valve Outlet and Inlet Connections.

(3) Straight threads having at least 6 engaged threads are authorized. Straight threads must have a tight fit and a calculated shear stress of at least 10 times the test pressure of the cylinder. Gaskets, adequate to prevent leakage, are required.

(i) *Hydrostatic test.* Each cylinder must withstand a hydrostatic test, as follows:

(1) The test must be by water-jacket, or other suitable method, operated so as to obtain accurate data. Pressure gauge must permit reading to an accuracy of 1 percent. The expansion gauge must permit reading of total expansion to an accuracy either of 1 percent of 0.1 cubic centimeter.

(2) Pressure must be maintained for at least 30 seconds and sufficiently longer to ensure complete expansion. Any internal pressure applied after heat treatment and previous to the official test may not exceed 90 percent of the test pressure. If, due to failure of the test apparatus, the test pressure cannot be maintained, the test may be repeated at a pressure increased by 10 percent or 100 psig, which ever is the lower.

(3) Permanent volumetric expansion may not exceed 10 percent of total volumetric expansion at test pressure.

(4) Each cylinder must be tested to at least ⅔ times service pressure.

(j) *Cycling tests.* Prior to the initial shipment of any specific cylinder design, cyclic pressurization tests must have been performed on at least three representative samples without failure as follows:

(1) Pressurization must be performed hydrostatically between approximately zero psig and the service pressure at a rate not in excess of 10 cycles per minute. Adequate recording instrumentation must be provided if equipment is to be left unattended for periods of time.

(2) Tests prescribed in paragraph (j)(1) of this section must be repeated on one random sample out of each lot of cylinders. The cylinder may then be subjected to a burst test.

(3) A lot is defined as a group of cylinders fabricated from the same heat of steel, manufactured by the same process and heat treated in the same equipment under the same conditions of time, temperature, and atmosphere, and may not exceed a quantity of 200 cylinders.

(4) All cylinders used in cycling tests must be destroyed.

(k) *Burst test.* One cylinder taken at random out of each lot of cylinders must be hydrostatically tested to destruction.

(l) *Flattening test.* A flattening test must be performed on one cylinder taken at random out of each lot of 200 or less, by placing the cylinder between wedge shaped knife edges having a 60° included angle, rounded to ½-inch radius. The longitudinal axis of the cylinder must be at a 90-degree angle to knife edges during the test. For lots of 30 or less, flattening tests are authorized to be made on a ring at least 8 inches long cut from each cylinder and subjected to same heat treatment as the finished cylinder.

(m) *Physical tests.* A physical test must be conducted to determine yield strength, tensile strength, elongation, and reduction of area of material, as follows:

(1) Test is required on 2 specimens cut from 1 cylinder taken at random out of each lot of cylinders.

(2) Specimens must conform to the following:

(i) A gauge length of at least 24 times the thickness with a width not over six times the thickness. The specimen, exclusive of grip ends, may not be flattened. Grip ends may be flattened to within one inch of each end of the reduced section. When size of cylinder does not permit securing straight specimens, the specimens may be taken in any location or direction and may be straightened or flattened cold by pressure only, not by blows. When specimens are so taken and prepared, the inspector's report must show in connection with the record of physical tests detailed information in regard to such specimens.

(ii) Heating of a specimen for any purpose is not authorized.

(3) The yield strength in tension must be the stress corresponding to a permanent strain of 0.2 percent of the gauge length.

(i) The yield strength must be determined by either the ''offset'' method or the ''extension under load'' method as prescribed in ASTM E 8 (IBR, see §171.7 of this subchapter).

(ii) In using the ''extension under load'' method, the total strain (or ''extension under load'') corresponding to the stress at which the 0.2 percent permanent strain occurs may be determined with sufficient accuracy by calculating the elastic extension of the gauge length under appropriate load and adding thereto 0.2 percent of the gauge length. Elastic extension calculations must be based on an elastic modulus of 30,000,000. In the event of controversy, the entire stress-strain diagram must be plotted and the yield strength determined from the 0.2 percent offset.

(iii) For the purpose of strain measurement, the initial strain must be set while the specimen is under a stress of 12,000 psi, the strain indicator reading being set at the calculated corresponding strain.

(iv) Cross-head speed of the testing machine may not exceed ⅛ inch per minute during yield strength determination.

(n) *Magnetic particle inspection.* Inspection must be performed on the inside of each container before closing and externally on each finished container after heat treatment. Evidence of discontinuities, which in the opinion of a qualified inspector may appreciably weaken or decrease the durability of the cylinder, must be cause for rejection.

(o) *Leakage test.* All spun cylinders and plugged cylinders must be tested for leakage by dry gas or dry air pressure after the bottom has been cleaned and is free from all moisture, subject to the following conditions and limitations:

(1) Pressure, approximately the same as but not less than service pressure, must be applied to one side of the finished bottom over an area of at least 1/16 of the total area of the bottom but not less than ¾ inch in diameter, including the closure, for at least one minute, during which time the other side of the bottom exposed to pressure must be covered with water and closely examined for indications of leakage. Except as provided in paragraph (q) of this section, a cylinder must be rejected if there is leakage.

(2) A spun cylinder is one in which an end closure in the finished cylinder has been welded by the spinning process.

(3) A plugged cylinder is one in which a permanent closure in the bottom of a finished cylinder has been effected by a plug.

(4) As a safety precaution, if the manufacturer elects to make this test before the hydrostatic test, the manufacturer should design the test apparatus so that the pressure is applied to the smallest area practicable, around the point of closure, and so as to use the smallest possible volume of air or gas.

(p) *Acceptable results of tests.* Results of the flattening test, physical tests, burst test, and cycling test must conform to the following:

(1) Flattening required without cracking to ten times the wall thickness of the cylinder.

(2) Physical tests:

(i) An elongation of at least 6 percent for a gauge length of 24 times the wall thickness.

(ii) The tensile strength may not exceed 165,000 p.s.i.

(3) The burst pressure must be at least ⅔ times the test pressure.

(4) Cycling-at least 10,000 pressurizations.

(q) *Rejected cylinders*. Reheat treatment is authorized for rejected cylinders. Subsequent thereto, cylinders must pass all prescribed tests to be acceptable. Repair by welding or spinning is not authorized. For each cylinder subjected to reheat treatment during original manufacture, sidewall measurements must be made to verify that the minimum sidewall thickness meets specification requirements after the final heat treatment.

(r) *Marking*. (1) Cylinders must be marked by low stress type steel stamping in an area and to a depth which will insure that the wall thickness measured from the root of the stamping to the interior surface is equal to or greater than the minimum prescribed wall thickness. Stamping must be permanent and legible. Stamping on side wall not authorized.

(2) The rejection elastic expansion (REE), in cubic cm (cc), must be marked on the cylinder near the date of test. The REE for a cylinder is 1.05 times its original elastic expansion.

(3) Name plates are authorized, provided that they can be permanently and securely attached to the cylinder. Attachment by either brazing or welding is not permitted. Attachment by soldering is permitted provided steel temperature does not exceed 500 °F.

(s) *Inspector's report*. In addition to the requirements of § 178.35, the inspector's report must indicate the rejection elastic expansion (REE), in cubic cm (cc).

[Amdt. 178–114, 61 FR 25942, May 23, 1996, as amended at 62 FR 51561, Oct. 1, 1997; 65 FR 58631, Sept. 29, 2000; 66 FR 45385, Aug. 28, 2001; 67 FR 51652, Aug. 8, 2002; 68 FR 75748, 75749, Dec. 31, 2003]

§ 178.45 Specification 3T seamless steel cylinder.

(a) *Type, size, and service pressure*. A DOT 3T cylinder is a seamless steel cylinder with a minimum water capacity of 1,000 pounds and a minimum service pressure of 1,800 psig. Each cylinder must have integrally formed heads concave to pressure at both ends. The inside head shape must be hemispherical, ellipsoidal in which the major axis is two times the minor axis, or a dished shape falling within these two limits. Permanent closures formed by spinning are prohibited.

(b) *Material, steel*. Only open hearth, basic oxygen, or electric furnace process steel of uniform quality is authorized. The steel analysis must conform to the following:

ANALYSIS TOLERANCES

Element	Ladle analysis	Check Analysis	
		Under	Over
Carbon	0.35 to 0.50	0.03	0.04
Manganese	0.75 to 1.05	0.04	0.04
Phosphorus (max)	0.035	.....	0.01
Sulphur (max)	0.04	.....	0.01
Silicon	0.15 to 0.35	0.02	0.03
Chromium	0.80 to 1.15	0.05	0.05
Molybdenum	0.15 to 0.25	0.02	0.02

(1) A heat of steel made under the specifications in the table in this paragraph (b), the ladle analysis of which is slightly out of the specified range, is acceptable if satisfactory in all other aspects. However, the check analysis tolerances shown in the table in this paragraph (b) may not be exceeded except as approved by the Department.

(2) Material with seams, cracks, laminations, or other injurious defects is not permitted.

(3) Material used must be identified by any suitable method.

(c) *Manufacture*. General manufacturing requirements are as follows:

(1) Surface finish must be uniform and reasonably smooth.

(2) Inside surfaces must be clean, dry, and free of loose particles.

(3) No defect of any kind is permitted if it is likely to weaken a finished cylinder.

(4) If the cylinder surface is not originally free from the defects, the surface may be machined or otherwise treated to eliminate these defects provided the minimum wall thickness is maintained.

(5) Welding or brazing on a cylinder is not permitted.

(d) *Wall thickness*. The minimum wall thickness must be such that the wall stress at the minimum specified test pressure does not exceed 67 percent of the minimum tensile strength of the

steel as determined by the physical tests required in paragraphs (j) and (k) of this section. A wall stress of more than 90,500 p.s.i. is not permitted. The minimum wall thickness for any cylinder may not be less than 0.225 inch.

(1) Calculation of the stress for cylinders must be made by the following formula:

$$S = [P(1.3D^2 + 0.4d^2)] / (D^2 - d^2)$$

Where:

S = Wall stress in psi;
P = Minimum test pressure, at least ⅔ service pressure;
D = Outside diameter in inches;
d = Inside diameter in inches.

(2) Each cylinder must meet the following additional requirement which assumes a cylinder horizontally supported at its two ends and uniformly loaded over its entire length. This load consists of the weight per inch of length of the straight cylindrical portion filled with water compressed to the specified test pressure. The wall thickness must be increased when necessary to meet this additional requirement:

(i) The sum of two times the maximum tensile stress in the bottom fibers due to bending (see paragraph (d)(2)(ii) of this section), plus the maximum tensile stress in the same fibers due to hydrostatic testing (see paragraph (d)(2)(iii) of this section) may not exceed 80 percent of the minimum yield strength of the steel at this maximum stress.

(ii) The following formula must be used to calculate the maximum tensile stress due to bending:

$$S = Mc / I$$

Where:

S = Tensile stress in psi;
M = Bending moment in inch-pounds ($wl^2/8$);
I = Moment of inertia—0.04909 ($D^4 - d^4$) in inches fourth;
c = Radius (D/2) of cylinder in inches;
w = Weight per inch of cylinder filled with water;
l = Length of cylinder in inches;
D = Outside diameter in inches;
d = Inside diameter in inches.

(iii) The following formula must be used to calculate the maximum longitudinal tensile stress due to hydrostatic test pressure:

$$S = A_1 P / A_2$$

Where:

S = Tensile stress in psi;
A_1 = Internal area in cross section of cylinder in square inches;
P = Hydrostatic test pressure-psig;
A_2 = Area of metal in cross section of cylinder in square inches.

(e) *Heat treatment.* Each completed cylinder must be uniformly and properly heat treated prior to testing, as follows:

(1) Each cylinder must be heated and held at the proper temperature for at least one hour per inch of thickness based on the maximum thickness of the cylinder and then quenched in a suitable liquid medium having a cooling rate not in excess of 80 percent of water. The steel temperature on quenching must be that recommended for the steel analysis, but it must never exceed 1750 °F.

(2) After quenching, each cylinder must be reheated to a temperature below the transformation range but not less than 1050 °F., and must be held at this temperature for at least one hour per inch of thickness based on the maximum thickness of the cylinder. Each cylinder must then be cooled under conditions recommended for the steel.

(f) *Openings.* Openings in cylinders must comply with the following:

(1) Openings are permitted on heads only.

(2) The size of any centered opening in a head may not exceed one half the outside diameter of the cylinder.

(3) Openings in a head must have ligaments between openings of at least three times the average of their hole diameter. No off-center opening may exceed 2.625 inches in diameter.

(4) All openings must be circular.

(5) All openings must be threaded. Threads must be in compliance with the following:

(i) Each thread must be clean cut, even, without any checks, and to gauge.

(ii) Taper threads, when used, must be the American Standard Pipe thread (NPT) type and must be in compliance with the requirements of NBS Handbook H–28 (IBR, see §171.7 of this subchapter).

(iii) Taper threads conforming to National Gas Taper thread (NGT) standards must be in compliance with the requirements of NBS Handbook H–28.

(iv) Straight threads conforming with National Gas Straight thread (NGS) standards are authorized. These threads must be in compliance with the requirements of NBS Handbook H–28.

(g) *Hydrostatic test.* Each cylinder must be tested at an internal pressure by the water jacket method or other suitable method, conforming to the following requirements:

(1) The testing apparatus must be operated in a manner that will obtain accurate data. Any pressure gauge used must permit reading to an accuracy of one percent. Any expansion gauge used must permit reading of the total expansion to an accuracy of one percent.

(2) Any internal pressure applied to the cylinder after heat treatment and before the official test may not exceed 90 percent of the test pressure.

(3) The pressure must be maintained sufficiently long to assure complete expansion of the cylinder. In no case may the pressure be held less than 30 seconds.

(4) If, due to failure of the test apparatus, the required test pressure cannot be maintained, the test must be repeated at a pressure increased by 10 percent or 100 psig, whichever is lower or, the cylinder must be reheat treated.

(5) Permanent volumetric expansion of the cylinder may not exceed 10 percent of its total volumetric expansion at the required test pressure.

(6) Each cylinder must be tested to at least ⅔ times its service pressure.

(h) *Ultrasonic examination.* After the hydrostatic test, the cylindrical section of each vessel must be examined in accordance with ASTM E 213 for shear wave and E 114 for straight beam (IBR, Standard *see* § 171.7 of this subchapter). The equipment used must be calibrated to detect a notch equal to five percent of the design minimum wall thickness. Any discontinuity indication greater than that produced by the five percent notch must be cause for rejection of the cylinder, unless the discontinuity is repaired within the requirements of this specification.

(i) *Basic requirements for tension and Charpy impact tests.* Cylinders must be subjected to a tension and Charpy impact as follows:

(1) When the cylinders are heat treated in a batch furnace, two tension specimens and three Charpy impact specimens must be tested from one of the cylinders or a test ring from each batch. The lot size represented by these tests may not exceed 200 cylinders.

(2) When the cylinders are heat treated in a continuous furnace, two tension specimens and three Charpy impact specimens must be tested from one of the cylinders or a test ring from each four hours or less of production. However, in no case may a test lot based on this production period exceed 200 cylinders.

(3) Each specimen for the tension and Charpy impact tests must be taken from the side wall of a cylinder or from a ring which has been heat treated with the finished cylinders of which the specimens must be representative. The axis of the specimens must be parallel to the axis of the cylinder. Each cylinder or ring specimen for test must be of the same diameter, thickness, and metal as the finished cylinders they represent. A test ring must be at least 24 inches long with ends covered during the heat treatment process so as to simulate the heat treatment process of the finished cylinders it represents.

(4) A test cylinder or test ring need represent only one of the heats in a furnace batch provided the other heats in the batch have previously been tested and have passed the tests and that such tests do not represent more than 200 cylinders from any one heat.

(5) The test results must conform to the requirements specified in paragraphs (j) and (k) of this section.

(6) When the test results do not conform to the requirements specified, the cylinders represented by the tests may be reheat treated and the tests repeated. Paragraph (i)(5) of this section applies to any retesting.

(j) *Basic conditions for acceptable physical testing.* The following criteria must be followed to obtain acceptable physical test results:

(1) Each tension specimen must have a gauge length of two inches with a width not exceeding one and one-half inches. Except for the grip ends, the specimen may not be flattened. The

grip ends may be flattened to within one inch of each end of the reduced section.

(2) A specimen may not be heated after heat treatment specified in paragraph (d) of this section.

(3) The yield strength in tension must be the stress corresponding to a permanent strain of 0.2 percent of the gage length.

(i) This yield strength must be determined by the ''offset'' method or the ''extension under load'' method described in ASTM E 8 (IBR, see §171.7 of this subchapter).

(ii) For the ''extension under load'' method, the total strain (or extension under load) corresponding to the stress at which the 0.2 percent permanent strain occurs may be determined with sufficient accuracy by calculating the elastic extension of the gage length under appropriate load and adding thereto 0.2 percent of the gage length. Elastic extension calculations must be based on an elastic modulus of 30,000,000. However, when the degree of accuracy of this method is questionable the entire stress-strain diagram must be plotted and the yield strength determined from the 0.2 percent offset.

(iii) For the purpose of strain measurement, the initial strain must be set with the specimen under a stress of 12,000 p.s.i. and the strain indicator reading set at the calculated corresponding strain.

(iv) The cross-head speed of the testing machine may not exceed ⅛ inch per minute during the determination of yield strength.

(4) Each impact specimen must be Charpy V-notch type size 10 mm × 10 mm taken in accordance with paragraph 11 of ASTM A 333 (IBR, see §171.7 of this subchapter). When a reduced size specimen is used, it must be the largest size obtainable.

(k) *Acceptable physical test results*. Results of physical tests must conform to the following:

(1) The tensile strength may not exceed 155,000 p.s.i.

(2) The elongation must be at least 16 percent for a two-inch gage length.

(3) The Charpy V-notch impact properties for the three impact specimens which must be tested at 0 °F may not be less than the values shown as follows:

Size of specimen (mm)	Average value for acceptance (3 specimens)	Minimum value (1 specimen only of the 3)
10.0×10.0	25.0 ft. lbs.	20.0 ft. lbs.
10.0×7.5	21.0 ft. lbs.	17.0 ft. lbs.
10.0×5.0	17.0 ft. lbs.	14.0 ft. lbs.

(4) After the final heat treatment, each vessel must be hardness tested on the cylindrical section. The tensile strength equivalent of the hardness number obtained may not be more than 165,000 p.s.i. (Rc 36). When the result of a hardness test exceeds the maximum permitted, two or more retests may be made; however, the hardness number obtained in each retest may not exceed the maximum permitted.

(l) *Rejected cylinders*. Reheat treatment is authorized for rejected cylinders. However, each reheat treated cylinder must subsequently pass all the prescribed tests. Repair by welding is not authorized.

(m) *Markings*. Marking must be done by stamping into the metal of the cylinder. All markings must be legible and located on a shoulder.

(n) *Inspector's report*. In addition to the requirements of §178.35, the inspector's report for the physical test report, must indicate the average value for three specimens and the minimum value for one specimen for each lot number.

[Amdt. 178–114, 61 FR 25942, May 23, 1996, as amended at 66 FR 45385, 43588, Aug. 28, 2001; 67 FR 51652, Aug. 8, 2002; 68 FR 48571, Aug. 14, 2003; 68 FR 75748, 75749, Dec. 31, 2003]

§178.46 Specification 3AL seamless aluminum cylinders.

(a) *Size and service pressure*. A DOT 3AL cylinder is a seamless aluminum cylinder with a maximum water capacity of 1000 pounds and minimum service pressure of 150 psig.

(b) *Authorized material and identification of material*. The material of construction must meet the following conditions:

(1) Starting stock must be cast stock or traceable to cast stock.

(2) Material with seams, cracks, laminations, or other defects likely to weaken the finished cylinder may not be used.

(3) Material must be identified by a suitable method that will identify the alloy, the aluminum producer's cast number, the solution heat treat batch number and the lot number.

(4) The material must be of uniform quality. Only the following heat treatable aluminum alloys in table 1 and 2 are permitted as follows:

TABLE 1—HEAT OR CAST ANALYSIS FOR ALUMINUM; SIMILAR TO "ALUMINUM ASSOCIATION"[1] ALLOY 6061

[CHEMICAL ANALYSIS IN WEIGHT PERCENT[2]]

Si min/max	Fe max	Cu min/max	Mn max	Mg min/max	Cr min/max	Zn max	Ti max	Pb max	Bi max	Other		A1
										each max	total max	
0.4/0.8	0.7	0.15/0.4	0.15	0.8/1.2	0.04/0.35	0.25	0.15	0.005	0.005	0.05	0.15	Bal.

[1] The "Aluminum Association" refers to "Aluminum Standards and Data 1993", published by the Aluminum Association Inc.
[2] Except for "Pb" and "Bi", the chemical composition corresponds with that of Table 1 of ASTM B 221 (IBR, see § 171.7 of this subchapter) for Aluminum Association alloy 6061.

TABLE 2—MECHANICAL PROPERTY LIMITS

Alloy and temper	Tensile strength—PSI		Elongation—percent minimum for 2″ or 4D[1] size specimen
	Ultimate—minimum	Yield—minimum	
6061–T6	38,000	35,000	[2]14

[1] "D" represents specimen diameters. When the cylinder wall is greater than 3/16 inch thick, a retest without reheat treatment using the 4D size specimen is authorized if the test using the 2 inch size specimen fails to meet elongation requirements.
[2] When cylinder wall is not over 3/16-inch thick, 10 percent elongation is authorized when using a 24t×6t size test specimen.

(5) All starting stock must be 100 percent ultrasonically inspected, along the length at right angles to the central axis from two positions at 90° to one another. The equipment and continuous scanning procedure must be capable of detecting and rejecting internal defects such as cracks which have an ultrasonic response greater than that of a calibration block with a 5/64-inch diameter flat bottomed hole.

(6) Cast stock must have uniform equiaxed grain structure not to exceed 500 microns maximum.

(7) Any starting stock not complying with the provisions of paragraphs (b)(1) through (b)(6) of this section must be rejected.

(c) *Manufacture.* Cylinders must be manufactured in accordance with the following requirements:

(1) Cylinder shells must be manufactured by the backward extrusion method and have a cleanliness level adequate to ensure proper inspection. No fissure or other defect is acceptable that is likely to weaken the finished cylinder below the design strength requirements. A reasonably smooth and uniform surface finish is required. If not originally free from such defects, the surface may be machined or otherwise conditioned to eliminate these defects.

(2) Thickness of the cylinder base may not be less than the prescribed minimum wall thickness of the cylindrical shell. The cylinder base must have a basic torispherical, hemispherical, or ellipsoidal interior base configuration where the dish radius is no greater than 1.2 times the inside diameter of the shell. The knuckle radius may not be less than 12 percent of the inside diameter of the shell. The interior base contour may deviate from the true torispherical, hemispherical or ellipsoidal configuration provided that—

(i) Any areas of deviation are accompanied by an increase in base thickness;

(ii) All radii of merging surfaces are equal to or greater than the knuckle radius;

(iii) Each design has been qualified by successfully passing the cycling tests in this paragraph (c); and

(iv) Detailed specifications of the base design are available to the inspector.

(3) For free standing cylinders, the base thickness must be at least two times the minimum wall thickness along the line of contact between the

cylinder base and the floor when the cylinders are in the vertical position.

(4) Welding or brazing is prohibited.

(5) Each new design and any significant change to any acceptable design must be qualified for production by testing prototype samples as follows:

(i) Three samples must be subjected to 100,000 pressure reversal cycles between zero and service pressure or 10,000 pressure reversal cycles between zero and test pressure, at a rate not in excess of 10 cycles per minute without failure.

(ii) Three samples must be pressurized to destruction and failure may not occur at less than 2.5 times the marked cylinder service pressure. Each cylinder must remain in one piece. Failure must initiate in the cylinder sidewall in a longitudinal direction. Rate of pressurization may not exceed 200 psig per second.

(6) In this specification ''significant change'' means a 10 percent or greater change in cylinder wall thickness, service pressure, or diameter; a 30 percent or greater change in water capacity or base thickness; any change in material; over 100 percent increase in size of openings; or any change in the number of openings.

(d) *Wall thickness*. The minimum wall thickness must be such that the wall stress at the minimum specified test pressure will not exceed 80 percent of the minimum yield strength nor exceed 67 percent of the minimum ultimate tensile strength as verified by physical tests in paragraph (i) of this section. The minimum wall thickness for any cylinder with an outside diameter greater than 5 inches must be 0.125 inch. Calculations must be made by the following formula:

$$S = [P(1.3D^2 + 0.4d^2)] / (D^2 - d^2)$$

Where:

S = Wall stress in psi;

P = Prescribed minimum test pressure in psig (see paragraph (g) of this section);

D = Outside diameter in inches; and

d = Inside diameter in inches.

(e) *Openings*. Openings must comply with the following requirements:

(1) Openings are permitted in heads only.

(2) The size of any centered opening in a head may not exceed one-half the outside diameter of the cylinder.

(3) Other openings are permitted in the head of a cylinder if:

(i) Each opening does not exceed 2.625 inches in diameter, or one-half the outside diameter of the cylinder; whichever is less;

(ii) Each opening is separated from each other by a ligament; and

(iii) Each ligament which separates two openings must be at least three times the average of the diameters of the two openings.

(4) All openings must be circular.

(5) All openings must be threaded. Threads must comply with the following:

(i) Each thread must be clean cut, even, without checks, and to gauge.

(ii) Taper threads, when used, must conform to one of the following:

(A) American Standard Pipe Thread (NPT) type, conforming to the requirements of NBS Handbook H–28 (IBR, see §171.7 of this subchapter);

(B) National Gas Taper Thread (NGT) type, conforming to the requirements of NBS Handbook H–28; or

(C) Other taper threads conforming to other standards may be used provided the length is not less than that specified for NPT threads.

(iii) Straight threads, when used, must conform to one of the following:

(A) National Gas Straight Thread (NGS) type, conforming to the requirements of NBS Handbook H–28;

(B) Unified Thread (UN) type, conforming to the requirements of NBS Handbook H–28;

(C) Controlled Radius Root Thread (UN) type, conforming to the requirements of NBS Handbook H–28; or

(D) Other straight threads conforming to other recognized standards may be used provided that the requirements in paragraph (e)(5)(iv) of this section are met.

(iv) All straight threads must have at least 6 engaged threads, a tight fit, and a factor of safety in shear of at least 10 at the test pressure of the cylinder. Shear stress must be calculated by using the appropriate thread shear area in accordance with NBS Handbook H–28.

(f) *Heat treatment*. Prior to any test, all cylinders must be subjected to a solution heat treatment and aging treatment appropriate for the aluminum alloy used.

(g) *Hydrostatic test*. Each cylinder must be subjected to an internal test pressure using the water jacket equipment and method or other suitable equipment and method and comply with the following requirements:

(1) The testing apparatus must be operated in a manner so as to obtain accurate data. The pressure gauge used must permit reading to an accuracy of one percent. The expansion gauge must permit reading the total expansion to an accuracy of either one percent or 0.1 cubic centimeter.

(2) The test pressure must be maintained for a sufficient period of time to assure complete expansion of the cylinder. In no case may the pressure be held less than 30 seconds. If, due to failure of the test apparatus, the required test pressure cannot be maintained, the test may be repeated at a pressure increased by 10 percent or 100 psig, whichever is lower. If the test apparatus again fails to maintain the test pressure, the cylinder being tested must be rejected. Any internal pressure applied to the cylinder before any official test may not exceed 90 percent of the test pressure.

(3) The minimum test pressure is the greatest of the following:

(i) 450 psig regardless of service pressure;

(ii) Two times the service pressure for cylinders having service pressure less than 500 psig; or

(iii) Five-thirds times the service pressure for cylinders having a service pressure of at least 500 psig.

(4) Permanent volumetric expansion may not exceed 10 percent of total volumetric expansion at test pressure.

(h) *Flattening test*. One cylinder taken at random out of each lot must be subjected to a flattening test as follows:

(1) The test must be between knife edges, wedge shaped, having a 60° included angle, and rounded in accordance with the following table. The longitudinal axis of the cylinder must be at an angle 90° to the knife edges during the test. The flattening test table is as follows:

TABLE 3—FLATTENING TEST TABLE

Cylinder wall thickness in inches	Radius in inches
Under .150	.500
.150 to .249	.875
.250 to .349	1.500
.350 to .449	2.125
.450 to .549	2.750
.550 to .649	3.500
.650 to .749	4.125

(2) An alternate bend test in accordance with ASTM E 290 using a mandrel diameter not more than 6 times the wall thickness is authorized to qualify lots that fail the flattening test of this section without reheat treatment. If used, this test must be performed on two samples from one cylinder taken at random out of each lot of 200 cylinders or less.

(3) Each test cylinder must withstand flattening to nine times the wall thickness without cracking. When the alternate bend test is used, the test specimens must remain uncracked when bent inward around a mandrel in the direction of curvature of the cylinder wall until the interior edges are at a distance apart not greater than the diameter of the mandrel.

(i) *Mechanical properties test*. Two test specimens cut from one cylinder representing each lot of 200 cylinders or less must be subjected to the mechanical properties test, as follows:

(1) The results of the test must conform to at least the minimum acceptable mechanical property limits for aluminum alloys as specified in paragraph (b) of this section.

(2) Specimens must be 4D bar or gauge length 2 inches with width not over 1½ inch taken in the direction of extrusion approximately 180° from each other; provided that gauge length at least 24 times thickness with width not over 6 times thickness is authorized, when cylinder wall is not over 3/16 inch thick. The specimen, exclusive of grip ends, may not be flattened. Grip ends may be flattened to within one inch of each end of the reduced section. When the size of the cylinder does not permit securing straight specimens, the specimens may be taken in any location or direction and may be straightened or flattened cold by pressure only, not by blows. When such specimens are used,

the inspector's report must show that the specimens were so taken and prepared. Heating of specimens for any purpose is forbidden.

(3) The yield strength in tension must be the stress corresponding to a permanent strain of 0.2 percent of the gauge length.

(i) The yield strength must be determined by either the ''offset'' method or the ''extension under load'' method as prescribed in ASTM B 557 (IBR, see § 171.7 of this subchapter).

(ii) In using the ''extension under load'' method, the total strain (or ''extension under load'') corresponding to the stress at which the 0.2 percent permanent strain occurs may be determined with sufficient accuracy by calculating the elastic extension of the gauge length under appropriate load and adding thereto 0.2 percent of the gauge length. Elastic extension calculations must be based on an elastic modulus of 10,000,000 psi. In the event of controversy, the entire stress-strain diagram must be plotted and the yield strength determined from the 0.2 percent offset.

(iii) For the purpose of strain measurement, the initial strain must be set while the specimen is under a stress of 6,000 psi, the strain indicator reading being set at the calculated corresponding strain.

(iv) Cross-head speed of the testing machine may not exceed ⅛ inch per minute during yield strength determination.

(j) *Rejected cylinder*. Reheat treatment of rejected cylinders is authorized one time. Subsequent thereto, cylinders must pass all prescribed tests to be acceptable.

(k) *Duties of inspector*. In addition to the requirements of § 178.35, the inspector shall:

(1) Verify compliance with the provisions of paragraph (b) of this section by:

(i) Performing or witnessing the performance of the chemical analyses on each melt or cast lot or other unit of starting material; or

(ii) Obtaining a certified chemical analysis from the material or cylinder manufacturer for each melt, or cast of material; or

(iii) Obtaining a certified check analysis on one cylinder out of each lot of 200 cylinders or less, if a certificate containing data to indicate compliance with the material specification is obtained.

(2) The inspector must verify ultrasonic inspection of all material by inspection or by obtaining the material producer's certificate of ultrasonic inspection. Ultrasonic inspection must be performed or verified as having been performed in accordance with paragraph (b)(5) of this section.

(3) The inspector must also determine that each cylinder complies with this specification by:

(i) Selecting the samples for check analyses performed by other than the material producer;

(ii) Verifying that the prescribed minimum thickness was met by measuring or witnessing the measurement of the wall thickness; and

(iii) Verifying that the identification of material is proper.

(4) Prior to initial production of any design or design change, verify that the design qualification tests prescribed in paragraph (c)(6) of this section have been performed with acceptable results.

(l) *Definitions*. (1) In this specification, a ''lot'' means a group of cylinders successively produced having the same:

(i) Size and configuration;

(ii) Specified material of construction;

(iii) Process of manufacture and heat treatment;

(iv) Equipment of manufacture and heat treatment; and

(v) Conditions of time, temperature and atmosphere during heat treatment.

(2) In no case may the lot size exceed 200 cylinders, but any cylinder processed for use in the required destructive physical testing need not be counted as being one of the 200.

(m) *Inspector's report*. In addition to the information required by § 178.35, the record of chemical analyses must also include the alloy designation, and applicable information on iron, titanium,

zinc, magnesium and any other applicable element used in the construction of the cylinder.

[Amdt. 178–114, 61 FR 25942, May 23, 1996, as amended at 66 FR 45386–45388, Aug. 28, 2001; 67 FR 51652, Aug. 8, 2002; 68 FR 75749, Dec. 31, 2003; 77 FR 60943, Oct. 5, 2012]

§ 178.47 Specification 4DS welded stainless steel cylinders for aircraft use.

(a) *Type, size, and service pressure.* A DOT 4DS cylinder is either a welded stainless steel sphere (two seamless hemispheres) or circumferentially welded cylinder both with a water capacity of not over 100 pounds and a service pressure of at least 500 but not over 900 psig.

(b) *Steel.* Types 304, 321 and 347 stainless steel are authorized with proper welding procedure. A heat of steel made under the specifications in table 1 in this paragraph (b), check chemical analysis of which is slightly out of the specified range, is acceptable, if satisfactory in all other respects, provided the tolerances shown in table 2 in this paragraph (b) are not exceeded, except as approved by Associate Administrator. The following chemical analyses are authorized:

TABLE 1—AUTHORIZED MATERIALS

	Stainless steels		
	304 (percent)	321 (percent)	347 (percent)
Carbon (max)	0.08	0.08	0.08
Manganese (max)	2.00	2.00	2.00
Phosphorus (max)	.030	.030	.030
Sulphur (max)	.030	.030	.030
Silicon (max)	.75	.75	.75
Nickel	8.0/11.0	9.0/13.0	9.0/13.0
Chromium	18.0/20.0	17.0/20.0	17.0/20.0
Molybdenum			
Titanium		(1)	
Columbium			(2)

[1] Titanium may not be more than 5C and not more than 0.60%.
[2] Columbium may not be less than 10C and not more than 1.0%.

TABLE 2—CHECK ANALYSIS TOLERANCES

Element	Limit or maximum specified (percent)	Tolerance (percent) over the maximum limit or under the minimum limit	
		Under minimum limit	Over maximum limit
Carbon	To 0.15 incl	0.01	0.01
Manganese	Over 1.15 to 2.50 incl	0.05	0.05
Phosphorus[1]	All ranges	.....	.01
Sulphur	All ranges	.....	.01
Silicon	Over 0.30 to 1.00 incl	.05	.05
Nickel	Over 5.30 to 10.00 incl	.10	.10
	Over 10.00 to 14.00 incl	.15	.15
Chromium	Over 15.00 to 20.00 incl	.20	.20
Titanium	All ranges	.05	.05
Columbium	All ranges	.05	.05

[1] Rephosphorized steels not subject to check analysis for phosphorus.

(c) *Identification of material.* Materials must be identified by any suitable method.

(d) *Manufacture.* Cylinders must be manufactured using equipment and processes adequate to ensure that each cylinder produced conforms to the requirements of this subpart. No defect is permitted that is likely to weaken the finished cylinder appreciably, a reasonably smooth and uniform surface finish is required. No abrupt change in wall thickness is permitted. Welding procedures and operators must be qualified in accordance with CGA Pamphlet C–3 (IBR, see § 171.7 of this subchapter). All seams of the sphere or cylinder must be fusion welded. Seams must be of the

butt type and means must be provided for accomplishing complete penetration of the joint.

(e) *Attachments*. Attachments to the container are authorized by fusion welding provided that such attachments are made of weldable stainless steel in accordance with paragraph (b) of this section.

(f) *Wall thickness*. The minimum wall thickness must be such that the wall stress at the minimum specified test pressure may not be over 60,000 psig. A minimum wall thickness of 0.040 inch is required for any diameter container. Calculations must be made by the following formulas:

(1) Calculation for sphere must be made by the formula:

$$S = PD / 4tE$$

Where:

S = Wall stress in psi;
P = Test pressure prescribed for water jacket test, i.e., at least two times service pressure, in psig;
D = Outside diameter in inches;
t = Minimum wall thickness in inches;
E = 0.85 (provides 85 percent weld efficiency factor which must be applied in the girth weld area and heat zones which zone must extend a distance of 6 times wall thickness from center of weld);
E = 1.0 (for all other areas).

(2) Calculation for a cylinder must be made by the formula:

$$S = [P(1.3D^2 + 0.4d^2)] / (D^2 - d^2)$$

Where:

S = Wall stress in psi;
P = Test pressure prescribed for water jacket test, i.e., at least two times service pressure, in psig;
D = Outside diameter in inches;
d = Inside diameter in inches.

(g) *Heat treatment*. The seamless hemispheres and cylinders may be stress relieved or annealed for forming. Welded container must be stress relieved at a temperature of 775 °F ±25° after process treatment and before hydrostatic test.

(h) *Openings in container*. Openings must comply with the following:

(1) Each opening in the container must be provided with a fitting, boss or pad of weldable stainless steel securely attached to the container by fusion welding.

(2) Attachments to a fitting, boss, or pad must be adequate to prevent leakage. Threads must comply with the following:

(i) Threads must be clean cut, even, without checks, and tapped to gauge.

(ii) Taper threads to be of length not less than as specified for American Standard taper pipe threads.

(iii) Straight threads having at least 4 engaged threads, to have tight fit and calculated shear strength at least 10 times the test pressure of the container; gaskets required, adequate to prevent leakage.

(i) *Process treatment*. Each container must be hydraulically pressurized in a water jacket to at least 100 percent, but not more than 110 percent, of the test pressure and maintained at this pressure for a minimum of 3 minutes. Total and permanent expansion must be recorded and included in the inspector's report.

(j) *Hydrostatic test*. Each cylinder must successfully withstand a hydrostatic test as follows:

(1) The test must be by water-jacket, operated so as to obtain accurate data. The pressure gauge must permit reading to an accuracy of 1 percent. The expansion gauge must permit reading of total expansion to an accuracy either of 1 percent or 0.1 cubic centimeter.

(2) Pressure must be maintained for at least 30 seconds and sufficiently longer to ensure complete expansion. If, due to failure of the test apparatus, the test pressure cannot be maintained, the test may be repeated at a pressure increased by 10 percent or 100 psig, whichever is the lower.

(3) Permanent volumetric expansion may not exceed 10 percent of total volumetric expansion at test pressure.

(4) Each container must be tested to at least 2 times service pressure.

(5) Container must then be inspected. Any wall thickness lower than that required by paragraph (f) of this section must be cause for rejection. Bulges and cracks must be cause for rejection. Welded joint defects exceeding requirements of paragraph (k) of this section must be cause for rejection.

(k) *Radiographic inspection*. Radiographic inspection is required on all

welded joints which are subjected to internal pressure, except that at the discretion of the disinterested inspector, openings less than 25 percent of the container diameter need not be subjected to radiographic inspection. Evidence of any defects likely to seriously weaken the container is cause for rejection. Radiographic inspection must be performed subsequent to the hydrostatic test.

(l) *Burst test.* One container taken at random out of 200 or less must be hydrostatically tested to destruction. Rupture pressure must be included as part of the inspector's report.

(m) *Flattening test.* A flattening test must be performed as follows:

(1) For spheres the test must be at the weld between parallel steel plates on a press with welded seam at right angles to the plates. Test one sphere taken at random out of each lot of 200 or less after the hydrostatic test. Any projecting appurtenances may be cut off (by mechanical means only) prior to crushing.

(2) For cylinders the test must be between knife edges, wedge shaped, 60° angle, rounded to ½-inch radius. Test one cylinder taken at random out of each lot of 200 or less, after the hydrostatic test.

(n) *Acceptable results for flattening and burst tests.* Acceptable results for flattening and burst tests are as follows:

(1) Flattening required to 50 percent of the original outside diameter without cracking.

(2) Burst pressure must be at least 3 times the service pressure.

(o) *Rejected containers.* Repair of welded seams by welding prior to process treatment is authorized. Subsequent thereto, containers must be heat treated and pass all prescribed tests.

(p) *Duties of inspector.* In addition to the requirements of § 178.35, the inspector must verify that all tests are conducted at temperatures between 60 °F and 90 °F.

(q) *Marking.* Markings must be stamped plainly and permanently on a permanent attachment or on a metal nameplate permanently secured to the container by means other than soft solder.

[Amdt. 178–114, 61 FR 25942, May 23, 1996, as amended at 66 FR 45386, 45388, Aug. 28, 2001; 67 FR 51653, Aug. 8, 2002; 68 FR 75748, Dec. 31, 2003]

§ 178.50 Specification 4B welded or brazed steel cylinders.

(a) *Type, size, and service pressure.* A DOT 4B is a welded or brazed steel cylinder with longitudinal seams that are forged lap-welded or brazed and with water capacity (nominal) not over 1,000 pounds and a service pressure of at least 150 but not over 500 psig. Cylinders closed in by spinning process are not authorized.

(b) *Steel.* Open-hearth, electric or basic oxygen process steel of uniform quality must be used. Content percent may not exceed the following: Carbon, 0.25; phosphorus, 0.045; sulphur, 0.050.

(c) *Identification of material.* Material must be identified by any suitable method except that plates and billets for hotdrawn cylinders must be marked with the heat number.

(d) *Manufacture.* Cylinders must be manufactured using equipment and processes adequate to ensure that each cylinder produced conforms to the requirements of this subpart. No defect is permitted that is likely to weaken the finished cylinder appreciably. A reasonably smooth and uniform surface finish is required. Exposed bottom welds on cylinders over 18 inches long must be protected by footrings. Welding procedures and operators must be qualified in accordance with CGA Pamphlet C–3 (IBR, see § 171.7 of this subchapter). Seams must be made as follows:

(1) *Welded or brazed circumferential seams.* Heads attached by brazing must have a driving fit with the shell, unless the shell is crimped, swedged, or curled over the skirt or flange of the head, and be thoroughly brazed until complete penetration by the brazing material of the brazed joint is secured. Depth of brazing from end of shell must be at least four times the thickness of shell metal.

(2) *Longitudinal seams in shells.* Longitudinal seams must be forged lap welded, by copper brazing, by copper alloy

brazing, or by silver alloy brazing. Copper alloy composition must be: Copper, 95 percent minimum; Silicon, 1.5 percent to 3.85 percent; Manganese, 0.25 percent to 1.10 percent. The melting point of the silver alloy brazing material must be in excess of 1000 °F. When brazed, the plate edge must be lapped at least eight times the thickness of plate, laps being held in position, substantially metal to metal, by riveting or electric spot-welding; brazing must be done by using a suitable flux and by placing brazing material on one side of seam and applying heat until this material shows uniformly along the seam of the other side.

(e) *Welding or brazing.* Only the attachment of neckrings, footrings, handles, bosses, pads, and valve protection rings to the tops and bottoms of cylinders by welding or brazing is authorized. Such attachments and the portion of the container to which they are attached must be made of weldable steel, the carbon content of which may not exceed 0.25 percent except in the case of 4130X steel which may be used with proper welding procedure.

(f) *Wall thickness.* The wall thickness of the cylinder must comply with the following requirements:

(1) For cylinders with outside diameters over 6 inches the minimum wall thickness must be 0.090 inch. In any case, the minimum wall thickness must be such that calculated wall stress at minimum test pressure (paragraph (i)(4) of this section) may not exceed the following values:

(i) 24,000 psi for cylinders without longitudinal seam.

(ii) 22,800 psig for cylinders having copper brazed or silver alloy brazed longitudinal seam.

(iii) 18,000 psi for cylinders having forged lapped welded longitudinal seam.

(2) Calculation must be made by the formula:

$$S = [P(1.3D^2 + 0.4d^2)] / (D^2 - d^2)$$

Where:

S = wall stress in psi;

P = minimum test pressure prescribed for water jacket test or 450 psig whichever is the greater;

D = outside diameter in inches;

d = inside diameter in inches.

(g) *Heat treatment.* Cylinder body and heads, formed by drawing or pressing, must be uniformly and properly heat treated prior to tests.

(h) *Opening in cylinders.* Openings in cylinders must conform to the following:

(1) Each opening in cylinders, except those for safety devices, must be provided with a fitting, boss, or pad, securely attached to cylinder by brazing or by welding or by threads. Fitting, boss, or pad must be of steel suitable for the method of attachment employed, and which need not be identified or verified as to analysis except that if attachment is by welding, carbon content may not exceed 0.25 percent. If threads are used, they must comply with the following:

(i) Threads must be clean cut, even without checks, and tapped to gauge.

(ii) Taper threads to be of length not less than as specified for American Standard taper pipe threads.

(iii) Straight threads, having at least 4 engaged threads, to have tight fit and calculated shear strength at least 10 times the test pressure of the cylinder; gaskets required, adequate to prevent leakage.

(iv) A brass fitting may be brazed to the steel boss or flange on cylinders used as component parts of hand fire extinguishers.

(2) The closure of a fitting, boss, or pad must be adequate to prevent leakage.

(i) *Hydrostatic test.* Cylinders must withstand a hydrostatic test as follows:

(1) The test must be by water-jacket, or other suitable method, operated so as to obtain accurate data. The pressure gauge must permit reading to an accuracy of 1 percent. The expansion gauge must permit reading of total expansion to an accuracy either of 1 percent or 0.1 cubic centimeter.

(2) Pressure must be maintained for at least 30 seconds and sufficiently longer to ensure complete expansion. Any internal pressure applied after heat-treatment and previous to the official test may not exceed 90 percent of the test pressure. If, due to failure of the test apparatus, the test pressure cannot be maintained, the test may be repeated at a pressure increased by 10

percent or 100 psig, whichever is the lower.

(3) Permanent volumetric expansion may not exceed 10 percent of total volumetric expansion at test pressure.

(4) Cylinders must be tested as follows:

(i) At least one cylinder selected at random out of each lot of 200 or less must be tested as outlined in paragraphs (i)(1), (i)(2), and (i)(3) of this section to at least two times service pressure.

(ii) All cylinders not tested as outlined in paragraph (i)(4)(i) of this section must be examined under pressure of at least two times service pressure and show no defect.

(j) *Flattening test.* After the hydrostatic test, a flattening test must be performed on one cylinder taken at random out or each lot of 200 or less, by placing the cylinder between wedge shaped knife edges having a 60° included angle, rounded to ½-inch radius. The longitudinal axis of the cylinder must be at a 90-degree angle to knife edges during the test. For lots of 30 or less, flattening tests are authorized to be made on a ring at least 8 inches long cut from each cylinder and subjected to same heat treatment as the finished cylinder.

(k) *Physical test.* A physical test must be conducted to determine yield strength, tensile strength, elongation, and reduction of area of material as follows:

(1) The test is required on 2 specimens cut from 1 cylinder, or part thereof heat-treated as required, taken at random out of each lot of 200 or less. For lots of 30 or less, physical tests are authorized to be made on a ring at least 8 inches long cut from each cylinder and subjected to same heat treatment as the finished cylinder.

(2) Specimens must conform to the following:

(i) A gauge length of 8 inches with a width of not over 1½ inches, a gauge length of 2 inches with a width of not over 1½ inches, or a gauge length at least 24 times the thickness with a width not over 6 times the thickness is authorized when a cylinder wall is not over 3⁄16 inch thick.

(ii) The specimen, exclusive of grip ends, may not be flattened. Grip ends may be flattened to within one inch of each end of the reduced section.

(iii) When size of cylinder does not permit securing straight specimens, the specimens may be taken in any location or direction and may be straightened or flattened cold, by pressure only, not by blows. When specimens are so taken and prepared, the inspector's report must show in connection with record of physical tests detailed information in regard to such specimens.

(iv) Heating of a specimen for any purpose is not authorized.

(3) The yield strength in tension must be the stress corresponding to a permanent strain of 0.2 percent of the gauge length. The following conditions apply:

(i) The yield strength must be determined by either the ''offset'' method or the ''extension under load'' method as prescribed in ASTM E 8 (IBR, see § 171.7 of this subchapter).

(ii) In using the ''extension under load'' method, the total strain (or ''extension under load'') corresponding to the stress at which the 0.2 percent permanent strain occurs may be determined with sufficient accuracy by calculating the elastic extension of the gauge length under appropriate load and adding thereto 0.2 percent of the gauge length. Elastic extension calculations must be based on an elastic modulus of 30,000,000. In the event of controversy, the entire stress-strain diagram must be plotted and the yield strength determined from the 0.2 percent offset.

(iii) For the purpose of strain measurement, the initial strain must be set while the specimen is under a stress of 12,000 psi, and strain indicator reading must be set at the calculated corresponding strain.

(iv) Cross-head speed of the testing machine may not exceed ⅛ inch per minute during yield strength determination.

(l) *Acceptable results for physical and flattening tests.* Either of the following is an acceptable result:

(1) An elongation of at least 40 percent for a 2-inch gauge length or at least 20 percent in other cases and yield strength not over 73 percent of

tensile strength. In this instance, a flattening test is not required.

(2) When cylinders are constructed of lap welded pipe, flattening test is required, without cracking, to 6 times the wall thickness. In such case, the rings (crop ends) cut from each end of pipe, must be tested with the weld 45° or less from the point of greatest stress. If a ring fails, another from the same end of pipe may be tested.

(m) *Rejected cylinders.* Reheat treatment is authorized for rejected cylinder. Subsequent thereto, cylinders must pass all prescribed tests to be acceptable. Repair of brazed seams by brazing and welded seams by welding is authorized.

(n) *Markings.* Markings must be stamped plainly and permanently in any of the following locations on the cylinder:

(1) On shoulders and top heads when they are not less than 0.087-inch thick.

(2) On side wall adjacent to top head for side walls which are not less than 0.090 inch thick.

(3) On a cylindrical portion of the shell which extends beyond the recessed bottom of the cylinder, constituting an integral and non-pressure part of the cylinder.

(4) On a metal plate attached to the top of the cylinder or permanent part thereof; sufficient space must be left on the plate to provide for stamping at least six retest dates; the plate must be at least 1/16-inch thick and must be attached by welding, or by brazing. The brazing rod must melt at a temperature of 1100 °F. Welding or brazing must be along all the edges of the plate.

(5) On the neck, neckring, valve boss, valve protection sleeve, or similar part permanently attached to the top of the cylinder.

(6) On the footring permanently attached to the cylinder, provided the water capacity of the cylinder does not exceed 25 pounds.

[Amdt. 178–114, 61 FR 25942, May 23, 1996, as amended at 62 FR 51561, Oct. 1, 1997; 66 FR 45385, 45388, Aug. 28, 2001; 67 FR 51653, Aug. 8, 2002; 68 FR 75748, Dec. 31, 2003]

§ 178.51 Specification 4BA welded or brazed steel cylinders.

(a) *Type, size, and service pressure.* A DOT 4BA cylinder is a cylinder, either spherical or cylindrical in shape, with a water capacity of 1,000 pounds or less and a service pressure of at least 225 and not over 500 psig. Closures made by the spinning process are not authorized.

(1) Spherical type cylinders must be made from two seamless hemispheres joined by the welding of one circumferential seam.

(2) Cylindrical type cylinders must be of circumferentially welded or brazed construction.

(b) *Steel.* The steel used in the construction of the cylinder must be as specified in table 1 of appendix A to this part.

(c) *Identification of material.* Material must be identified by any suitable method except that plates and billets for hotdrawn cylinders must be marked with the heat number.

(d) *Manufacture.* Cylinders must be manufactured using equipment and processes adequate to ensure that each cylinder produced conforms to the requirements of this subpart. No defect is permitted that is likely to weaken the finished cylinder appreciably. A reasonably smooth and uniform surface finish is required. Exposed bottom welds on cylinders over 18 inches long must be protected by footrings.

(1) Seams must be made as follows:

(i) Minimum thickness of heads and bottoms must be not less than 90 percent of the required thickness of the side wall.

(ii) Circumferential seams must be made by welding or by brazing. Heads must be attached by brazing and must have a driving fit with the shell, unless the shell is crimped, swedged or curled over the skirt or flange of the head and must be thoroughly brazed until complete penetration by the brazing material of the brazed joint is secured. Depth of brazing from end of the shell must be at least four times the thickness of shell metal.

(iii) Longitudinal seams in shells must be made by copper brazing, copper alloy brazing, or by silver alloy brazing. Copper alloy composition must be: Copper 95 percent minimum,

Silicon 1.5 percent to 3.85 percent, Manganese 0.25 percent to 1.10 percent. The melting point of the silver alloy brazing material must be in excess of 1,000 °F. The plate edge must be lapped at least eight times the thickness of plate, laps being held in position, substantially metal to metal, by riveting or by electric spot-welding. Brazing must be done by using a suitable flux and by placing brazing material on one side of seam and applying heat until this material shows uniformly along the seam of the other side. Strength of longitudinal seam: Copper brazed longitudinal seam must have strength at least 3/2 times the strength of the steel wall.

(2) Welding procedures and operators must be qualified in accordance with CGA Pamphlet C–3 (IBR, see §171.7 of this subchapter).

(e) *Welding and brazing*. Only the welding or brazing of neckrings, footrings, handles, bosses, pads, and valve protection rings to the tops and bottoms of cylinders is authorized. Provided that such attachments and the portion of the container to which they are attached are made of weldable steel, the carbon content of which may not exceed 0.25 percent except in the case of 4130× steel which may be used with proper welding procedure.

(f) *Wall thickness*. The minimum wall thickness of the cylinder must meet the following conditions:

(1) For any cylinder with an outside diameter of greater than 6 inches, the minimum wall thickness is 0.078 inch. In any case the minimum wall thickness must be such that the calculated wall stress at the minimum test pressure may not exceed the lesser value of any of the following:

(i) The value shown in table 1 of appendix A to this part, for the particular material under consideration;

(ii) One-half of the minimum tensile strength of the material determined as required in paragraph (j) of this section;

(iii) 35,000 psi; or

(iv) Further provided that wall stress for cylinders having copper brazed longitudinal seams may not exceed 95 percent of any of the above values. Measured wall thickness may not include galvanizing or other protective coating.

(2) Cylinders that are cylindrical in shape must have the wall stress calculated by the formula:

$$S = [P(1.3D^2 + 0.4d^2)] / (D^2 - d^2)$$

Where:

S = wall stress in psi;
P = minimum test pressure prescribed for water jacket test;
D = outside diameter in inches;
d = inside diameter in inches.

(3) Cylinders that are spherical in shape must have the wall stress calculated by the formula:

$$S = PD / 4tE$$

Where:

S = wall stress in psi;
P = minimum test pressure prescribed for water jacket test;
D = outside diameter in inches;
t = minimum wall thickness in inches;
E = 0.85 (provides 85 percent weld efficiency factor which must be applied in the girth weld area and heat affected zones which zone must extend a distance of 6 times wall thickness from center line of weld);
E = 1.0 (for all other areas).

(4) For a cylinder with a wall thickness less than 0.100 inch, the ratio of tangential length to outside diameter may not exceed 4.1.

(g) *Heat treatment*. Cylinders must be heat treated in accordance with the following requirements:

(1) Each cylinder must be uniformly and properly heat treated prior to test by the applicable method shown in table 1 of appendix A to this part. Heat treatment must be accomplished after all forming and welding operations, except that when brazed joints are used, heat treatment must follow any forming and welding operations, but may be done before, during or after the brazing operations.

(2) Heat treatment is not required after the welding or brazing of weldable low carbon parts to attachments of similar material which have been previously welded or brazed to the top or bottom of cylinders and properly heat treated, provided such subsequent welding or brazing does not produce a temperature in excess of 400 °F in any part of the top or bottom material.

(h) *Openings in cylinders.* Openings in cylinders must comply with the following requirements:

(1) Any opening must be placed on other than a cylindrical surface.

(2) Each opening in a spherical type cylinder must be provided with a fitting, boss, or pad of weldable steel securely attached to the container by fusion welding.

(3) Each opening in a cylindrical type cylinder must be provided with a fitting, boss, or pad, securely attached to container by brazing or by welding.

(4) If threads are used, they must comply with the following:

(i) Threads must be clean-cut, even, without checks and tapped to gauge.

(ii) Taper threads must be of a length not less than that specified for American Standard taper pipe threads.

(iii) Straight threads, having at least 4 engaged threads, must have a tight fit and a calculated shear strength of at least 10 times the test pressure of the cylinder. Gaskets, adequate to prevent leakage, are required.

(i) *Hydrostatic test.* Each cylinder must successfully withstand a hydrostatic test, as follows:

(1) The test must be by water jacket, or other suitable method, operated so as to obtain accurate data. A pressure gauge must permit reading to an accuracy of 1 percent. An expansion gauge must permit reading of total expansion to an accuracy of either 1 percent or 0.1 cubic centimeter.

(2) Pressure must be maintained for at least 30 seconds and sufficiently longer to ensure complete expansion. Any internal pressure applied after heat treatment and previous to the official test may not exceed 90 percent of the test pressure.

(3) Permanent volumetric expansion may not exceed 10 percent of the total volumetric expansion at test pressure.

(4) Cylinders must be tested as follows:

(i) At least one cylinder selected at random out of each lot of 200 or less must be tested as outlined in paragraphs (i)(1), (i)(2), and (i)(3) of this section to at least two times service pressure.

(ii) All cylinders not tested as outlined in paragraph (i)(4)(i) of this section must be examined under pressure of at least two times service pressure and show no defect.

(j) *Physical test.* A physical test must be conducted to determine yield strength, tensile strength, elongation, and reduction of area of material, as follows:

(1) The test is required on 2 specimens cut from one cylinder or part thereof having passed the hydrostatic test and heat-treated as required, taken at random out of each lot of 200 or less. Physical tests for spheres are required on 2 specimens cut from flat representative sample plates of the same heat taken at random from the steel used to produce the spheres. This flat steel from which 2 specimens are to be cut must receive the same heat treatment as the spheres themselves. Sample plates must be taken from each lot of 200 or less spheres.

(2) Specimens must conform to the following:

(i) A gauge length of 8 inches with a width not over 1½ inches, or a gauge length of 2 inches with a width not over 1½ inches, or a gauge length at least 24 times the thickness with a width not over 6 times the thickness is authorized when a cylinder wall is not over 3/16 inch thick.

(ii) The specimen, exclusive of grip ends, may not be flattened. Grip ends may be flattened to within one inch of each end of the reduced section.

(iii) When size of the cylinder does not permit securing straight specimens, the specimens may be taken in any location or direction and may be straightened or flattened cold, by pressure only, not by blows. When specimens are so taken and prepared, the inspector's report must show in connection with record of physical tests detailed information in regard to such specimens.

(iv) Heating of a specimen for any purpose is not authorized.

(3) The yield strength in tension must be the stress corresponding to a permanent strain of 0.2 percent of the gauge length. The following conditions apply:

(i) The yield strength must be determined by either the ''offset'' method or the ''extension under load'' method as prescribed in ASTM E 8 (IBR, see § 171.7 of this subchapter).

(ii) In using the ''extension under load'' method, the total strain (or ''extension under load''), corresponding to the stress at which the 0.2 percent permanent strain occurs may be determined with sufficient accuracy by calculating the elastic extension of the gauge length under appropriate load and adding thereto 0.2 percent of the gauge length. Elastic extension calculations must be based on an elastic modulus of 30,000,000. In the event of controversy, the entire stress-strain diagram must be plotted and the yield strength determined from the 0.2 percent offset.

(iii) For the purpose of strain measurement, the initial strain reference must be set while the specimen is under a stress of 12,000 psi, and the strain indicator reading must be set at the calculated corresponding strain.

(iv) Cross-head speed of the testing machine may not exceed ⅛ inch per minute during yield strength determination.

(k) *Elongation*. Physical test specimens must show at least a 40 percent elongation for a 2-inch gauge length or at least 20 percent in other cases. Except that these elongation percentages may be reduced numerically by 2 for 2-inch specimens, and by 1 in other cases, for each 7,500 psi increment of tensile strength above 50,000 psi to a maximum of four such increments.

(l) *Tests of welds*. Except for brazed seams, welds must be tested as follows:

(1) *Tensile test*. A specimen must be cut from one cylinder of each lot of 200 or less, or welded test plate. The welded test plate must be of one of the heats in the lot of 200 or less which it represents, in the same condition and approximately the same thickness as the cylinder wall except that in no case must it be of a lesser thickness than that required for a quarter size Charpy impact specimen. The weld must be made by the same procedures and subjected to the same heat treatment as the major weld on the cylinder. The specimen must be taken from across the major seam and must be prepared and tested in accordance with and must meet the requirements of CGA Pamphlet C–3 (IBR, see §171.7 of this subchapter). Should this specimen fail to meet the requirements, specimens may be taken from two additional cylinders or welded test plates from the same lot and tested. If either of the latter specimens fail to meet the requirements, the entire lot represented must be rejected.

(2) *Guided bend test*. A root bend test specimen must be cut from the cylinder or welded test plate, used for the tensile test specified in paragraph (l)(1) of this section. Specimens must be taken from across the major seam and must be prepared and tested in accordance with and must meet the requirements of CGA Pamphlet C–3.

(3) *Alternate guided-bend test*. This test may be used and must be as required by CGA Pamphlet C–3. The specimen must be bent until the elongation at the outer surface, adjacent to the root of the weld, between the lightly scribed gage lines a to b, must be at least 20 percent, except that this percentage may be reduced for steels having a tensile strength in excess of 50,000 psig, as provided in paragraph (k) of this section.

(m) *Rejected cylinders*. Reheat treatment is authorized for rejected cylinders. Subsequent thereto, cylinders must pass all prescribed tests to be acceptable. Repair of brazed seams by brazing and welded seams by welding is authorized.

(n) *Markings*. Markings must be stamped plainly and permanently in one of the following locations on the cylinder:

(1) On shoulders and top heads not less than 0.087 inch thick.

(2) On side wall adjacent to top head for side walls not less than 0.090 inch thick.

(3) On a cylindrical portion of the shell which extends beyond the recessed bottom of the cylinder constituting an integral and non-pressure part of the cylinder.

(4) On a plate attached to the top of the cylinder or permanent part thereof; sufficient space must be left on the plate to provide for stamping at least six retest dates; the plate must be at least 1/16 inch thick and must be attached by welding, or by brazing at a temperature of at least 1100 °F., throughout all edges of the plate.

(5) On the neck, neckring, valve boss, valve protection sleeve, or similar part

permanently attached to the top of the cylinder.

(6) On the footring permanently attached to the cylinder, provided the water capacity of the cylinder does not exceed 25 pounds.

[Amdt. 178–114, 61 FR 25942, May 23, 1996, as amended at 66 FR 4535, Aug. 28, 2001; 67 FR 16015, Sept. 27, 2002; 67 FR 51653, Aug. 8, 2002; 68 FR 75748, Dec. 31, 2003]

§ 178.53 Specification 4D welded steel cylinders for aircraft use.

(a) *Type, size, and service pressure.* A DOT 4D cylinder is a welded steel sphere (two seamless hemispheres) or circumferentially welded cylinder (two seamless drawn shells) with a water capacity not over 100 pounds and a service pressure of at least 300 but not over 500 psig. Cylinders closed in by spinning process are not authorized.

(b) *Steel.* Open-hearth or electric steel of uniform and weldable quality must be used. Content may not exceed the following: Carbon, 0.25; phosphorus, 0.045; sulphur, 0.050, except that the following steels commercially known as 4130X and Type 304, 316, 321, and 347 stainless steels may be used with proper welding procedure. A heat of steel made under table 1 in this paragraph (b), check chemical analysis of which is slightly out of the specified range, is acceptable, if satisfactory in all other respects, provided the tolerances shown in table 2 in this paragraph (b) are not exceeded, except as approved by the Associate Administrator. The following chemical analyses are authorized:

TABLE 1—4130X STEEL

4130X	Percent
Carbon	0.25/0.35.
Manganese	0.40/0.60.
Phosphorus	0.04 max.
Sulphur	0.05 max
Silicon	0.15/0.35.
Chromium	0.80/1.10.
Molybdenum	0.15/0.25.
Zirconium	None.
Nickel	None.

TABLE 2—AUTHORIZED STAINLESS STEELS

	Stainless steels			
	304 (percent)	316 (percent)	321 (percent)	347 (percent)
Carbon (max)	0.08	0.08	0.08	0.08
Manganese (max)	2.00	2.00	2.00	2.00
Phosphorus (max)	.030	.045	.030	.030
Sulphur (max)	.030	.030	.030	.030
Silicon (max)	.75	1.00	.75	.75
Nickel	8.0/11.0	10.0/14.0	9.0/13.0	9.0/13.0
Chromium	18.0/20.0	16.0/18.0	17.0/20.0	17.0/20.0
Molybdenum	.....	2.0/3.0	.....	.....
Titanium	.....	.....	(1)	.....
Columbium	.....	.....	.....	(2)

[1] Titanium may not be less than 5C and not more than 0.60%.
[2] Columbium may not be less than 10C and not more than 1.0%.

TABLE 3—CHECK ANALYSIS TOLERANCES

Element	Limit or maximum specified (percent)	Tolerance (percent) over the maximum limit or under the minimum limit	
		Under minimum limit	Over maximum limit
Carbon	To 0.15 incl	0.01	0.01
	Over 0.15 to 0.40 incl	.03	.04
Manganese	To 0.60 incl	.03	.03
	Over 1.15 to 2.50 incl	.05	.05
Phosphorus [1]	All ranges	.....	.01
Sulphur	All ranges	.....	.01
Silicon	To 0.30 incl	.02	.03
	Over 0.30 to 1.00 incl	.05	.05
Nickel	Over 5.30 to 10.00 incl	.10	.10
	Over 10.00 to 14.00 incl	.15	.15
Chromium	To 0.90 incl	.03	.03
	Over 0.90 to 2.10 incl	.05	.05
	Over 15.00 to 20.00 incl	.20	.20

TABLE 3—CHECK ANALYSIS TOLERANCES—Continued

Element	Limit or maximum specified (percent)	Tolerance (percent) over the maximum limit or under the minimum limit	
		Under minimum limit	Over maximum limit
Molybdenum	To 0.20 incl	.01	.01
	Over 0.20 to 0.40 incl	.02	.02
	Over 1.75 to 3.0 incl	.10	.10
Titanium	All ranges	.05	.05
Columbium	All ranges	.05	.05

[1] Rephosphorized steels not subject to check analysis for phosphorus.

(c) *Identification of material.* Material must be identified by any suitable method except that plates and billets for hotdrawn cylinders must be marked with the heat number.

(d) *Manufacture.* Cylinders must be manufactured using equipment and processes adequate to ensure that each cylinder produced conforms to the requirements of this subpart. No defect is permitted that is likely to weaken the finished container appreciably. A reasonably smooth and uniform surface finish is required. Welding procedures and operators must be qualified in accordance with CGA Pamphlet C–3 (IBR, see § 171.7 of this subchapter).

(e) *Wall thickness.* The wall stress at the minimum test pressure may not exceed 24,000 psi, except where steels commercially known as 4130X, types 304, 316, 321, and 347 stainless steels are used, stress at the test pressures may not exceed 37,000 psi. The minimum wall thickness for any container having a capacity of 1,100 cubic inches or less is 0.04 inch. The minimum wall thickness for any container having a capacity in excess of 1,100 cubic inches is 0.095 inch. Calculations must be done by the following:

(1) Calculation for a ''sphere'' must be made by the formula:

$$S = PD / 4tE$$

Where:

S = wall stress in psi;
P = test pressure prescribed for water jacket test, i.e., at least two times service pressure, in psig;
D = outside diameter in inches;
t = minimum wall thickness in inches;
E = 0.85 (provides 85 percent weld efficiency factor which must be applied in the girth weld area and heat affected zones which zone must extend a distance of 6 times wall thickness from center line of weld);
E = 1.0 (for all other areas).

(2) Calculation for a cylinder must be made by the formula:

$$S = [P(1.3D^2 + 0.4d^2)] / (D^2 - d^{T12})$$

Where:

S = wall stress in psi;
P = test pressure prescribed for water jacket test, i.e., at least two times service pressure, in psig;
D = outside diameter in inches;
d = inside diameter in inches.

(f) *Heat treatment.* The completed cylinders must be uniformly and properly heat-treated prior to tests.

(g) *Openings in container.* Openings in cylinders must comply with the following:

(1) Each opening in the container, except those for safety devices, must be provided with a fitting, boss, or pad, securely attached to the container by brazing or by welding or by threads. If threads are used, they must comply with the following:

(i) Threads must be clean cut, even, without checks, and tapped to gauge.

(ii) Taper threads must be of a length not less than that specified for American Standard taper pipe threads.

(iii) Straight threads, having at least 4 engaged threads, must have a tight fit and calculated shear strength of at least 10 times the test pressure of the container. Gaskets, adequate to prevent leakage, are required.

(2) Closure of a fitting, boss, or pad must be adequate to prevent leakage.

(h) *Hydrostatic test.* Each cylinder must successfully withstand a hydrostatic test, as follows:

(1) The test must be by water-jacket, or other suitable method, operated so as to obtain accurate data. A pressure gauge must permit a reading to an accuracy of 1 percent. An expansion

gauge must permit reading of total expansion to an accuracy of either 1 percent or 0.1 cubic centimeter.

(2) Pressure must be maintained for at least 30 seconds and sufficiently longer to ensure complete expansion. Any internal pressure applied after heat-treatment and previous to the official test may not exceed 90 percent of the test pressure. If, due to failure of the test apparatus, the test pressure cannot be maintained, the test may be repeated at a pressure increased by 10 percent or 100 psig, whichever is the lower.

(3) Permanent volumetric expansion may not exceed 10 percent of the total volumetric expansion at test pressure.

(4) Containers must be tested as follows:

(i) Each container to at least 2 times service pressure; or

(ii) One container out of each lot of 200 or less to at least 3 times service pressure. Others must be examined under pressure of 2 times service pressure and show no defects.

(i) *Flattening test for spheres and cylinders.* Spheres and cylinders must be subjected to a flattening test as follows:

(1) One sphere taken at random out of each lot of 200 or less must be subjected to a flattening test as follows:

(i) The test must be performed after the hydrostatic test.

(ii) The test must be between parallel steel plates on a press with a welded seam at right angles to the plates. Any projecting appurtenances may be cut off (by mechanical means only) prior to crushing.

(2) One cylinder taken at random out of each lot of 200 or less must be subjected to a flattening test, as follows:

(i) The test must be performed after the hydrostatic test.

(ii) The test must be between knife edges, wedge shaped, 60° angle, rounded to ½ inch radius. For lots of 30 or less, physical tests are authorized to be made on a ring at least 8 inches long cut from each cylinder and subjected to the same heat treatment as the finished cylinder.

(j) *Physical test and specimens for spheres and cylinders.* Spheres and cylinders must be subjected to a physical test as follows:

(1) Physical test for spheres are required on 2 specimens cut from a flat representative sample plate of the same heat taken at random from the steel used to produce the sphere. This flat steel from which the 2 specimens are to be cut must receive the same heat-treatment as the spheres themselves. Sample plates must be taken for each lot of 200 or less spheres.

(2) Specimens for spheres must have a gauge length 2 inches with a width not over 1½ inches, or a gauge length at least 24 times the thickness with a width not over 6 times the thickness is authorized when a wall is not over 3⁄16 inch thick.

(3) Physical test for cylinders is required on 2 specimens cut from 1 cylinder taken at random out of each lot of 200 or less. For lots of 30 or less, physical tests are authorized to be made on a ring at least 8 inches long cut from each cylinder and subjected to the same heat treatment as the finished cylinder.

(4) Specimens for cylinders must conform to the following:

(i) A gauge length of 8 inches with a width not over 1½ inches, or a gauge length of 2 inches with a width not over 1½ inches, or a gauge length at least 24 times the thickness with a width not over 6 times the thickness is authorized when a cylinder wall is not over 3⁄16 inch thick.

(ii) The specimen, exclusive of grip ends, may not be flattened. Grip ends may be flattened to within 1 inch of each end of the reduced section. Heating of the specimen for any purpose is not authorized.

(5) The yield strength in tension must be the stress corresponding to a permanent strain of 0.2 percent of the gauge length. The following conditions apply:

(i) The yield strength must be determined by either the ''offset'' method or the ''extension under load'' method as prescribed in ASTM E 8 (IBR, see § 171.7 of this subchapter).

(ii) In using the ''extension under load'' method, the total strain (or ''extension under load'') corresponding to the stress at which the 0.2 percent permanent strain occurs may be determined with sufficient accuracy by calculating the elastic extension of the

gauge length under appropriate load and adding thereto 0.2 percent of the gauge length. Elastic extension calculations must be based on an elastic modulus of 30,000,000. In the event of controversy, the entire stress-strain diagram must be plotted and the yield strength determined from the 0.2 percent offset.

(iii) For the purpose of strain measurement, the initial strain must be set while the specimen is under a stress of 12,000 psi and the strain indicator reading being set at the calculated corresponding strain.

(iv) Cross-head speed of the testing machine may not exceed ⅛ inch per minute during yield strength determination.

(k) *Acceptable results for physical and flattening tests.* Either of the following is an acceptable result:

(1) An elongation of at least 40 percent for a 2 inch gauge length or at least 20 percent in other cases and yield strength not over 73 percent of tensile strength. In this instance, the flattening test is not required.

(2) An elongation of at least 20 percent for a 2 inch gauge length or 10 percent in other cases. Flattening is required to 50 percent of the original outside diameter without cracking.

(l) *Rejected cylinders.* Reheat-treatment is authorized for rejected cylinders. Subsequent thereto, containers must pass all prescribed tests to be acceptable. Repair of welded seams by welding prior to reheat-treatment is authorized.

(m) *Marking.* Marking on each container by stamping plainly and permanently are only authorized where the metal is at least 0.09 inch thick, or on a metal nameplate permanently secured to the container by means other than soft solder, or by means that would not reduce the wall thickness.

[Amdt. 178–114, 61 FR 25942, May 23, 1996, as amended at 66 FR 45386, 45388, Aug. 28, 2001; 67 FR 51653, Aug. 8, 2002; 68 FR 75748, Dec. 31, 2003]

§ 178.55 Specification 4B240ET welded or brazed cylinders.

(a) *Type, spinning process, size and service pressure.* A DOT 4B240ET cylinder is a brazed type cylinder made from electric resistance welded tubing. The maximum water capacity of this cylinder is 12 pounds or 333 cubic inches and the service must be 240 psig. The maximum outside diameter of the shell must be five inches and maximum length of the shell is 21 inches. Cylinders closed in by a spinning process are authorized.

(b) *Steel.* Open-hearth, basic oxygen, or electric steel of uniform quality must be used. Plain carbon steel content may not exceed the following: Carbon, 0.25; phosphorus, 0.045; sulfur, 0.050. The addition of other elements for alloying effect is prohibited.

(c) *Identification of material.* Material must be identified by any suitable method.

(d) *Manufacture.* Cylinders must be manufactured using equipment and processes adequate to ensure that each cylinder produced conforms to the requirements of this subpart. No defect is permitted that is likely to weaken the finished cylinder appreciably. A reasonably smooth and uniform surface finish is required. Heads may be attached to shells by lap brazing or may be formed integrally. The thickness of the bottom of cylinders welded or formed by spinning is, under no condition, to be less than two times the minimum wall thickness of the cylindrical shell. Such bottom thicknesses must be measured within an area bounded by a line representing the points of contact between the cylinder and the floor when the cylinder is in a vertical position. Seams must conform to the following:

(1) Circumferential seams must be by brazing only. Heads must be attached to shells by the lap brazing method and must overlap not less than four times the wall thickness. Brazing material must have a melting point of not less than 1000 °F. Heads must have a driving fit with the shell unless the shell is crimped, swedged, or curled over the skirt or flange of the head and be thoroughly brazed until complete penetration of the joint by the brazing material is secured. Brazed joints may be repaired by brazing.

(2) Longitudinal seams in shell must be by electric resistance welded joints only. No repairs to longitudinal joints is permitted.

(3) Welding procedures and operators must be qualified in accordance with CGA C–3 (IBR, see §171.7 of this subchapter).

(e) *Welding or brazing*. Only the attachment, by welding or brazing, to the tops and bottoms of cylinders of neckrings, footrings, handles, bosses, pads, and valve protection rings is authorized. Provided that such attachments and the portion of the container to which they are attached are made of weldable steel, the carbon content of which may not exceed 0.25 percent.

(f) *Wall thickness*. The wall stress must be at least two times the service pressure and may not exceed 18,000 psi. The minimum wall thickness is 0.044 inch. Calculation must be made by the following formula:

$$S = [P(1.3D^2 + 0.4d^2)] / (D^2 - d^2)$$

Where:

S = wall stress in psig;
P = 2 times service pressure;
D = outside diameter in inches;
d = inside diameter in inches.

(g) *Heat treatment*. Heads formed by drawing or pressing must be uniformly and properly heat treated prior to tests. Cylinders with integral formed heads or bases must be subjected to a normalizing operation. Normalizing and brazing operations may be combined, provided the operation is carried out at a temperature in excess of the upper critical temperature of the steel.

(h) *Openings in cylinders*. Openings in cylinders must comply with the following:

(1) Each opening in cylinders, except those for safety devices, must be provided with a fitting, boss, or pad, securely attached to the cylinder by brazing or by welding or by threads. A fitting, boss, or pad must be of steel suitable for the method of attachment employed, and which need not be identified or verified as to analysis, except that if attachment is by welding, carbon content may not exceed 0.25 percent. If threads are used, they must comply with the following:

(i) Threads must be clean cut, even without checks, and tapped to gauge.

(ii) Taper threads to be of length not less than as specified for American Standard taper pipe threads.

(iii) Straight threads, having at least 4 engaged threads, to have tight fit and calculated shear strength at least 10 times the test pressure of the cylinder; gaskets required, adequate to prevent leakage.

(2) Closure of a fitting, boss, or pad must be adequate to prevent leakage.

(i) *Hydrostatic test*. Each cylinder must successfully withstand a hydrostatic test as follows:

(1) The test must be by water-jacket, or other suitable method, operated so as to obtain accurate data. The pressure gauge must permit reading to an accuracy of 1 percent. The expansion gauge must permit reading of total expansion to an accuracy of either 1 percent or 0.1 cubic centimeter.

(2) Pressure must be maintained for at least 30 seconds and sufficiently longer to ensure complete expansion. Any internal pressure applied after heat-treatment and previous to the official test may not exceed 90 percent of the test pressure. If, due to failure of the test apparatus, the test pressure cannot be maintained, the test may be repeated at a pressure increased by 10 percent or 100 psig, whichever is the lower.

(3) Permanent volumetric expansion may not exceed 10 percent of total volumetric expansion at test pressure.

(4) Cylinders must be tested as follows:

(i) At least one cylinder selected at random out of each lot of 200 or less must be tested as outlined in paragraphs (i)(1), (i)(2), and (i)(3) of this section to at least two times service pressure.

(ii) All cylinders not tested as outlined in paragraph (i)(4)(i) of this section must be examined under pressure of at least two times service pressure and show no defect.

(5) Each 1000 cylinders or less successively produced each day must constitute a lot. One cylinder must be selected from each lot and hydrostatically tested to destruction. If this cylinder bursts below five times the service pressure, then two additional cylinders must be selected and subjected to this test. If either of these cylinders fails by bursting below five times the service pressure then the entire lot must be rejected. All cylinders

constituting a lot must be of identical size, construction heat-treatment, finish, and quality.

(j) *Flattening test.* Following the hydrostatic test, one cylinder taken at random out of each lot of 200 or less, must be subjected to a flattening test that is between knife edges, wedge shaped, 60° angle, rounded to ½ inch radius.

(k) *Physical test.* A physical test must be conducted to determine yield strength, tensile strength, elongation, and reduction of area of material, as follows:

(1) The test is required on 2 specimens cut from 1 cylinder, or part thereof heat-treated as required, taken at random out of each lot of 200 or less in the case of cylinders of capacity greater than 86 cubic inches and out of each lot of 500 or less for cylinders having a capacity of 86 cubic inches or less.

(2) Specimens must conform to the following:

(i) A gauge length of 8 inches with a width not over 1½ inches, a gauge length of 2 inches with a width not over 1½ inches, or a gauge length at least 24 times the thickness with a width not over 6 times the thickness is authorized when a cylinder wall is not over 3⁄16 inch thick.

(ii) The specimen, exclusive of grip ends, may not be flattened. Grip ends may be flattened to within one inch of each end of the reduced section.

(iii) When size of cylinder does not permit securing straight specimens, the specimens may be taken in any location or direction and may be straightened or flattened cold by pressure only, not by blows. When specimens are so taken and prepared, the inspector's report must show in connection with record of physical tests detailed information in regard to such specimens.

(iv) Heating of a specimen for any purpose is not authorized.

(3) The yield strength in tension must be the stress corresponding to a permanent strain of 0.2 percent of the gauge length. The following conditions apply:

(i) The yield strength must be determined by either the ''offset'' method or the ''extension under load'' method as prescribed in ASTM E 8 (IBR, see §171.7 of this subchapter).

(ii) In using the ''extension under load'' method, the total strain (or ''extension under load'') corresponding to the stress at which the 0.2 percent permanent strain occurs may be determined with sufficient accuracy by calculating the elastic extension of the gauge length under appropriate load and adding thereto 0.2 percent of the gauge length. Elastic extension calculations must be based on an elastic modulus of 30,000,000. In the event of controversy, the entire stress-strain diagram must be plotted and the yield strength determined from the 0.2 percent offset.

(iii) For the purpose of strain measurement, the initial strain must be set while the specimen is under a stress of 12,000 psi and the strain indicator reading being set at the calculated corresponding strain.

(iv) Cross-head speed of the testing machine may not exceed ⅛ inch per minute during yield strength determination.

(l) *Acceptable results for physical and flattening tests.* Acceptable results for the physical and flattening tests are an elongation of at least 40 percent for a 2 inch gauge length or at least 20 percent in other cases and a yield strength not over 73 percent of tensile strength. In this instance the flattening test is required, without cracking, to six times the wall thickness with a weld 90° from the direction of the applied load. Two rings cut from the ends of length of pipe used in production of a lot may be used for the flattening test provided the rings accompany the lot which they represent in all thermal processing operations. At least one of the rings must pass the flattening test.

(m) *Leakage test.* All spun cylinders and plugged cylinders must be tested for leakage by gas or air pressure after the bottom has been cleaned and is free from all moisture, subject to the following conditions:

(1) Pressure, approximately the same as but no less than service pressure, must be applied to one side of the finished bottom over an area of at least 1⁄16 of the total area of the bottom but not less than ¾ inch in diameter, including the closure, for at least 1

minute, during which time the other side of the bottom exposed to pressure must be covered with water and closely examined for indications of leakage. Except as provided in paragraph (n) of this section, cylinders which are leaking must be rejected.

(2) A spun cylinder is one in which an end closure in the finished cylinder has been welded by the spinning process.

(3) A plugged cylinder is one in which a permanent closure in the bottom of a finished cylinder has been effected by a plug.

(4) As a safety precaution, if the manufacturer elects to make this test before the hydrostatic test, he should design his apparatus so that the pressure is applied to the smallest area practicable, around the point of closure, and so as to use the smallest possible volume of air or gas.

(n) *Rejected cylinders*. Repairs of rejected cylinders is authorized. Cylinders that are leaking must be rejected, except that:

(1) Spun cylinders rejected under the provisions of paragraph (m) of this section may be removed from the spun cylinder category by drilling to remove defective material, tapping, and plugging.

(2) Brazed joints may be rebrazed.

(3) Subsequent to the operations noted in paragraphs (n)(1) and (n)(2) of this section, acceptable cylinders must pass all prescribed tests.

(o) *Marking*. Markings on each cylinder must be by stamping plainly and permanently on shoulder, top head, neck or valve protection collar which is permanently attached to the cylinders and forming an integral part thereof, provided that cylinders not less than 0.090 inch thick may be stamped on the side wall adjacent to top head.

[Amdt. 178–114, 61 FR 25942, May 23, 1996, as amended at 66 FR 45386, Aug. 28, 2001; 67 FR 51653, Aug. 8, 2002; 68 FR 75748, 75749, Dec. 31, 2003]

§ 178.56 Specification 4AA480 welded steel cylinders.

(a) *Type, size, and service pressure*. A DOT 4AA480 cylinder is a welded steel cylinder having a water capacity (nominal) not over 1,000 pounds water capacity and a service pressure of 480 psig. Closures welded by spinning process not permitted.

(b) *Steel*. The limiting chemical composition of steel authorized by this specification must be as shown in table I of appendix A to this part.

(c) *Identification of material*. Material must be identified by any suitable method except that plates and billets for hotdrawn cylinders must be marked with the heat number.

(d) *Manufacture*. Cylinders must be manufactured using equipment and processes adequate to ensure that each cylinder produced conforms to the requirements of this subpart. No defect is permitted that is likely to weaken the finished cylinder appreciably. A reasonably smooth and uniform surface finish is required. Exposed bottom welds on cylinders over 18 inches long must be protected by footrings. Minimum thickness of heads and bottoms may not be less than 90 percent of the required thickness of the side wall. Seams must be made as follows:

(1) Circumferential seams must be welded. Brazing is not authorized.

(2) Longitudinal seams are not permitted.

(3) Welding procedures and operators must be qualified in accordance with CGA C–3 (IBR, see § 171.7 of this subchapter).

(e) *Welding*. Only the welding of neckrings, footrings, bosses, pads, and valve protection rings to the tops and bottoms of cylinders is authorized. Provided that such attachments are made of weldable steel, the carbon content of which does not exceed 0.25 percent.

(f) *Wall thickness*. The wall thickness of the cylinder must conform to the following:

(1) For cylinders with an outside diameter over 5 inches, the minimum wall thickness is 0.078 inch. In any case, the minimum wall thickness must be such that the calculated wall stress at the minimum test pressure (in paragraph (i) of this section) may not exceed the lesser value of either of the following:

(i) One-half of the minimum tensile strength of the material determined as required in paragraph (j) of this section; or

(ii) 35,000 psi.

(2) Calculation must be made by the formula:

$$S = [P(1.3D^2 + 0.4d^2)] / (D^2 - d^2)$$

Where:

S = wall stress in psi;
P = minimum test pressure prescribed for water jacket test;
D = outside diameter in inches;
d = inside diameter in inches.

(3) The ratio of tangential length to outside diameter may not exceed 4.0 for cylinders with a wall thickness less than 0.100 inch.

(g) *Heat treatment.* Each cylinder must be uniformly and properly heat treated prior to tests. Any suitable heat treatment in excess of 1100 °F is authorized except that liquid quenching is not permitted. Heat treatment must be accomplished after all forming and welding operations. Heat treatment is not required after welding weldable low carbon parts to attachments of similar material which have been previously welded to the top or bottom of cylinders and properly heat treated, provided such subsequent welding does not produce a temperature in excess of 400 °F., in any part of the top or bottom material.

(h) *Openings in cylinders.* Openings in cylinders must conform to the following:

(1) All openings must be in the heads or bases.

(2) Each opening in the cylinder, except those for safety devices, must be provided with a fitting boss, or pad, securely attached to the cylinder by welding or by threads. If threads are used they must comply with the following:

(i) Threads must be clean-cut, even without checks and cut to gauge.

(ii) Taper threads to be of length not less than as specified for American Standard taper pipe threads.

(iii) Straight threads having at least 6 engaged threads, must have a tight fit and a calculated shear strength at least 10 times the test pressure of the cylinder. Gaskets, adequate to prevent leakage, are required.

(3) Closure of a fitting, boss or pad must be adequate to prevent leakage.

(i) *Hydrostatic test.* Each cylinder must successfully withstand a hydrostatic test as follows:

(1) The test must be by water jacket, or other suitable method, operated so as to obtain accurate data. The pressure gauge must permit reading to an accuracy of 1 percent. The expansion gauge must permit reading of total expansion to an accuracy of either 1 percent or 0.1 cubic centimeter.

(2) Pressure must be maintained for at least 30 seconds or sufficiently longer to assure complete expansion. Any internal pressure applied after heat-treatment and before the official test may not exceed 90 percent of the test pressure. If, due to failure of test apparatus, the test pressure cannot be maintained, the test may be repeated at a pressure increased by 10 percent or 100 psig, whichever is lower.

(3) Permanent volumetric expansion may not exceed 10 percent of the total volumetric expansion at test pressure.

(4) Cylinders must be tested as follows:

(i) At least one cylinder selected at random out of each lot of 200 or less must be tested as described in paragraphs (i)(1), (i)(2), and (i)(3) of this section, to at least two times service pressure. If a selected cylinder fails, then two additional specimens must be selected at random from the same lot and subjected to the prescribed test. If either of these fails the test, then each cylinder in that lot must be so tested; and

(ii) Each cylinder not tested as prescribed in paragraph (i)(4)(i) of this section must be examined under pressure of at least two times service pressure and must show no defect. A cylinder showing a defect must be rejected unless it may be requalified under paragraph (m) of this section.

(j) *Physical test.* A physical test must be conducted to determine yield strength, tensile strength, elongation, and reduction of area of material, as follows:

(1) The test is required on 2 specimens cut from one cylinder having passed the hydrostatic test, or part thereof heat-treated as required, taken at random out of each lot of 200 or less.

(2) Specimens must conform to the following:

(i) A gauge length of 8 inches with a width not over 1½ inches, a gauge length of 2 inches with a width not

over 1½ inches, or a gauge length at least 24 times the thickness with a width not over 6 times thickness is authorized when the cylinder wall is not over 3/16 inch thick.

(ii) The specimen, exclusive of grip ends, may not be flattened. Grip ends may be flattened to within one inch of each end of the reduced section.

(iii) When size of cylinder does not permit securing straight specimens, the specimens may be taken in any location or direction and may be straightened or flattened cold, by pressure only, not by blows. When specimens are so taken and prepared, the inspector's report must show in connection with record of physical tests detailed information in regard to such specimens.

(iv) Heating of a specimen for any purpose is not authorized.

(3) The yield strength in tension must be the stress corresponding to a permanent strain of 0.2 percent of the gauge length. The following conditions apply:

(i) The yield strength must be determined by either the ''offset'' method or the ''extension under load'' method as prescribed in ASTM E 8 (IBR, see §171.7 of this subchapter).

(ii) In using the ''extension under load'' method, the total strain (or ''extension under load''), corresponding to the stress at which the 0.2 percent permanent strain occurs may be determined with sufficient accuracy by calculating the elastic extension of the gauge length under appropriate load and adding thereto 0.2 percent of the gauge length. Elastic extension calculations must be based on an elastic modulus of 30,000,000. In the event of controversy, the entire stress-strain diagram must be plotted and the yield strength determined from the 0.2 percent offset.

(iii) For the purpose of strain measurement, the initial strain reference must be set while the specimen is under a stress of 12,000 psi and the strain indicator reading being set at the calculated corresponding strain.

(iv) Cross-head speed of the testing machine may not exceed ⅛ inch per minute during yield strength determination.

(k) *Elongation.* Physical test specimens must show at least a 40 percent elongation for 2-inch gauge lengths or at least a 20 percent elongation in other cases. Except that these elongation percentages may be reduced numerically by 2 for 2-inch specimens and by 1 in other cases for each 7,500 psi increment of tensile strength above 50,000 psi to a maximum of four such increments.

(l) *Tests of welds.* Welds must be tested as follows:

(1) *Tensile test.* A specimen must be cut from one cylinder of each lot of 200 or less, or a welded test plate. The welded test plate must be of one of the heats in the lot of 200 or less which it represents, in the same condition and approximately the same thickness as the cylinder wall except that it may not be of a lesser thickness than that required for a quarter size Charpy impact specimen. The weld must be made by the same procedures and subjected to the same heat treatment as the major weld on the cylinder. The specimens must be taken across the major seam and must be prepared and tested in accordance with and must meet the requirements of CGA Pamphlet C–3. Should this specimen fail to meet the requirements, specimens may be taken from two additional cylinders or welded test plates from the same lot and tested. If either of the latter specimens fail to meet the requirements, the entire lot represented must be rejected.

(2) *Guided bend test.* A root bend test specimen must be cut from the cylinder or a welded test plate, used for the tensile test specified in paragraph (l)(1) of this section. Specimens must be taken from across the major seam and must be prepared and tested in accordance with and must meet the requirements of CGA Pamphlet C–3.

(3) *Alternate guided-bend test.* This test may be used and must be as required by CGA Pamphlet C–3. The specimen must be bent until the elongation at the outer surface, adjacent to the root of the weld, between the lightly scribed gage lines-a to b, is at least 20 percent, except that this percentage may be reduced for steels having a tensile strength in excess of 50,000 psi, as provided in paragraph (k) of this section.

(m) *Rejected cylinders.* Reheat treatment of rejected cylinders is authorized. Subsequent thereto, cylinders must pass all prescribed tests to be acceptable. Repair of welded seams by welding is authorized.

(n) *Markings.* Markings must be stamped plainly and permanently in one of the following locations on the cylinder:

(1) On shoulders and top heads not less than 0.087 inch thick.

(2) On neck, valve boss, valve protection sleeve, or similar part permanently attached to top end of cylinder.

(3) On a plate attached to the top of the cylinder or permanent part thereof: sufficient space must be left on the plate to provide for stamping at least six retest dates: the plate must be at least 1/16 inch thick and must be attached by welding or by brazing at a temperature of at least 1100 °F, throughout all edges of the plate.

(4) Variations in location of markings authorized only when necessitated by lack of space.

[Amdt. 178–114, 61 FR 25942, May 23, 1996, as amended at 66 FR 45386, Aug. 28, 2001; 67 FR 51653, Aug. 8, 2002; 68 FR 75748, 75749, Dec. 31, 2003]

§ 178.57 Specification 4L welded insulated cylinders.

(a) *Type, size, service pressure, and design service temperature.* A DOT 4L cylinder is a fusion welded insulated cylinder with a water capacity (nominal) not over 1,000 pounds water capacity and a service pressure of at least 40 but not greater than 500 psig conforming to the following requirements:

(1) For liquefied hydrogen service, the cylinders must be designed to stand on end, with the axis of the cylindrical portion vertical.

(2) The design service temperature is the coldest temperature for which a cylinder is suitable. The required design service temperatures for each cryogenic liquid is as follows:

Cryogenic liquid	Design service temperature
Argon	Minus 320 °F or colder.
Helium	Minus 452 °F or colder.
Hydrogen	Minus 42 3 °F or colder.
Neon	Minus 411 °F or colder.
Nitrogen	Minus 320 °F or colder.
Oxygen	Minus 320 °F or colder.

(b) *Material.* Material use in the construction of this specification must conform to the following:

(1) *Inner containment vessel (cylinder).* Designations and limiting chemical compositions of steel authorized by this specification must be as shown in table 1 in paragraph (o) of this section.

(2) *Outer jacket.* Steel or aluminum may be used subject to the requirements of paragraph (o)(2) of this section.

(c) *Identification of material.* Material must be identified by any suitable method.

(d) *Manufacture.* Cylinders must be manufactured using equipment and processes adequate to ensure that each cylinder produced conforms to the requirements of this subpart and to the following requirements:

(1) No defect is permitted that is likely to weaken the finished cylinder appreciably. A reasonably smooth and uniform surface finish is required. The shell portion must be a reasonably true cylinder.

(2) The heads must be seamless, concave side to the pressure, hemispherical or ellipsoidal in shape with the major diameter not more than twice the minor diameter. Minimum thickness of heads may not be less than 90 percent of the required thickness of the sidewall. The heads must be reasonably true to shape, have no abrupt shape changes, and the skirts must be reasonably true to round.

(3) The surface of the cylinder must be insulated. The insulating material must be fire resistant. The insulation on non-evacuated jackets must be covered with a steel jacket not less than 0.060-inch thick or an aluminum jacket not less than 0.070 inch thick, so constructed that moisture cannot come in contact with the insulating material. If a vacuum is maintained in the insulation space, the evacuated jacket must be designed for a minimum collapsing pressure of 30 psig differential whether made of steel or aluminum. The construction must be such that the total heat transfer, from the atmosphere at ambient temperature to the contents of the cylinder, will not exceed 0.0005 Btu per hour, per Fahrenheit degree differential in temperature, per pound of water capacity of the cylinder. For

hydrogen, cryogenic liquid service, the total heat transfer, with a temperature differential of 520 Fahrenheit degrees, may not exceed that required to vent 30 SCF of hydrogen gas per hour.

(4) For a cylinder having a design service temperature colder than minus 320 °F, a calculation of the maximum weight of contents must be made and that weight must be marked on the cylinder as prescribed in § 178.35.

(5) Welding procedures and operations must be qualified in accordance with CGA Pamphlet C–3 (IBR, see § 171.7 of this subchapter). In addition, an impact test of the weld must be performed in accordance with paragraph (l) of this section as part of the qualification of each welding procedure and operator.

(e) *Welding*. Welding of the cylinder must be as follows:

(1) All seams of the cylinder must be fusion welded. A means must be provided for accomplishing complete penetration of the joint. Only butt or joggle butt joints for the cylinder seams are authorized. All joints in the cylinder must have reasonably true alignment.

(2) All attachments to the sidewalls and heads of the cylinder must be by fusion welding and must be of a weldable material complying with the impact requirements of paragraph (l) of this section.

(3) For welding the cylinder, each procedure and operator must be qualified in accordance with the sections of CGA Pamphlet C–3 that apply. In addition, impact tests of the weld must be performed in accordance with paragraph (l) of this section as part of the qualification of each welding procedure and operator.

(4) Brazing, soldering and threading are permitted only for joints not made directly to the cylinder body. Threads must comply with the requirements of paragraph (h) of this section.

(f) *Wall thickness*. The minimum wall thickness of the cylinder must be such that the calculated wall stress at the minimum required test pressure may not exceed the least value of the following:

(1) 45,000 psi.

(2) One-half of the minimum tensile strength across the welded seam determined in paragraph (l) of this section.

(3) One-half of the minimum tensile strength of the base metal determined as required in paragraph (j) of this section.

(4) The yield strength of the base metal determined as required in paragraph (l) of this section.

(5) Further provided that wall stress for cylinders having longitudinal seams may not exceed 85 percent of the above value, whichever applies.

(6) Calculation must be made by the following formula:

$$S = [P(1.3D^2 + 0.4d^2)] / (D^2 - d^2)$$

where:

S = wall stress in pounds psi;
P = minimum test pressure prescribed for pressure test in psig;
D = outside diameter in inches;
d = inside diameter in inches.

(g) *Heat treatment*. Heat treatment is not permitted.

(h) *Openings in cylinder*. Openings in cylinders must conform to the following:

(1) Openings are permitted in heads only. They must be circular and may not exceed 3 inches in diameter or one third of the cylinder diameter, whichever is less. Each opening in the cylinder must be provided with a fitting, boss or pad, either integral with, or securely attached to, the cylinder body by fusion welding. Attachments to a fitting, boss or pad may be made by welding, brazing, mechanical attachment, or threading.

(2) Threads must comply with the following:

(i) Threads must be clean-cut, even, without checks and cut to gauge.

(ii) Taper threads to be of a length not less than that specified for NPT.

(iii) Straight threads must have at least 4 engaged threads, tight fit and calculated shear strength at least 10 times the test pressure of the cylinder. Gaskets, which prevent leakage and are inert to the hazardous material, are required.

(i) *Pressure test*. Each cylinder, before insulating and jacketing, must be examined under a pressure of at least 2 times the service pressure maintained for at least 30 seconds without evidence of leakage, visible distortion or other defect. The pressure gauge must permit reading to an accuracy of 1 percent.

(j) *Physical test.* A physical test must be conducted to determine yield strength, tensile strength, and elongation as follows:

(1) The test is required on 2 specimens selected from material of each heat and in the same condition as that in the completed cylinder.

(2) Specimens must conform to the following:

(i) A gauge length of 8 inches with a width not over 1½ inches, a gauge length of 2 inches with width not over 1½ inches, or a gauge length at least 24 times thickness with a width not over 6 times thickness (authorized when cylinder wall is not over 1/16 inch thick).

(ii) The specimen, exclusive of grip ends, may not be flattened. Grip ends may be flattened to within one inch of each end of the reduced section.

(iii) When size of the cylinder does not permit securing straight specimens, the specimens may be taken in any location or direction and may be straightened or flattened cold by pressure only, not by blows. When specimens are so taken and prepared, the inspector's report must show in connection with record of physical tests detailed information in regard to such specimens.

(iv) Heating of a specimen for any purpose is not authorized.

(3) The yield strength in tension must be the stress corresponding to a permanent strain of 0.2 percent of the gauge length. The following conditions apply:

(i) The yield strength must be determined by either the ''offset'' method or the ''extension under load'' method as prescribed in ASTM E 8 (IBR, see §171.7 of this subchapter).

(ii) In using the ''extension under load'' method, the total strain (or ''extension under load''), corresponding to the stress at which the 0.2 percent permanent strain occurs may be determined with sufficient accuracy by calculating the elastic expansion of the gauge length under appropriate load and adding thereto 0.2 percent of the gauge length. Elastic extension calculations must be based on the elastic modulus of the material used. In the event of controversy, the entire stress-strain diagram must be plotted and the yield strength determined from the 0.2 percent offset.

(iii) For the purpose of strain measurement, the initial strain reference must be set while the specimen is under a stress of 12,000 psi and the strain indicator reading being set at the calculated corresponding strain.

(iv) Cross-head speed of the testing machine may not exceed ⅛ inch per minute during yield strength determination.

(k) *Acceptable results for physical tests.* Physical properties must meet the limits specified in paragraph (o)(1), table 1, of this section, for the particular steel in the annealed condition. The specimens must show at least a 20 percent elongation for a 2-inch gage length. Except that the percentage may be reduced numerically by 2 for each 7,500 psi increment of tensile strength above 100,000 psi to a maximum of 5 such increments. Yield strength and tensile strength must meet the requirements of paragraph (o)(1), table 1, of this section.

(l) *Tests of welds.* Welds must be tested as follows:

(1) *Tensile test.* A specimen must be cut from one cylinder of each lot of 200 or less, or welded test plate. The welded test plate must be of one of the heats in the lot of 200 or less which it represents, in the same condition and approximately the same thickness as the cylinder wall except that it may not be of a lesser thickness than that required for a quarter size Charpy impact specimen. The weld must be made by the same procedures and subjected to the same heat treatment as the major weld on the cylinder. The specimen must be taken across the major seam and must be prepared in accordance with and must meet the requirements of CGA Pamphlet C–3. Should this specimen fail to meet the requirements, specimens may be taken from two additional cylinders or welded test plates from the same lot and tested. If either of the latter specimens fails to meet the requirements, the entire lot represented must be rejected.

(2) *Guided bend test.* A ''root'' bend test specimen must be cut from the cylinder or welded test plate, used for the tensile test specified in paragraph (l)(1) of this section and from any other

seam or equivalent welded test plate if the seam is welded by a procedure different from that used for the major seam. Specimens must be taken across the particular seam being tested and must be prepared and tested in accordance with and must meet the requirements of CGA Pamphlet C–3.

(3) *Alternate guided-bend test.* This test may be used and must be as specified in CGA Pamphlet C–3. The specimen must be bent until the elongation at the outer surface, adjacent to the root of the weld, between the lightly scribed gage lines a to b, is at least 20 percent, except that this percentage may be reduced for steels having a tensile strength in excess of 100,000 psig, as provided in paragraph (c) of this section.

(4) *Impact tests.* One set of three impact test specimens (for each test) must be prepared and tested for determining the impact properties of the deposited weld metal—

(i) As part of the qualification of the welding procedure.

(ii) As part of the qualification of the operators.

(iii) For each ''heat'' of welding rodor wire used.

(iv) For each 1,000 feet of weld made with the same heat of welding rod or wire.

(v) All impact test specimens must be of the charpy type, keyhole or milled U-notch, and must conform in all respects to ASTM E 23 (IBR, see §171.7 of this subchapter). Each set of impact specimens must be taken across the weld and have the notch located in the weld metal. When the cylinder material thickness is 2.5 mm or thicker, impact specimens must be cut from a cylinder or welded test plate used for the tensile or bend test specimens. The dimension along the axis of the notch must be reduced to the largest possible of 10 mm, 7.5 mm, 5 mm or 2.5 mm, depending upon cylinder thickness. When the material in the cylinder or welded test plate is not of sufficient thickness to prepare 2.5 mm impact test specimens, 2.5 mm specimens must be prepared from a welded test plate made from ⅛ inch thick material meeting the requirements specified in paragraph (o)(1), table 1, of this section and having a carbon analysis of .05 minimum, but not necessarily from one of the heats used in the lot of cylinders. The test piece must be welded by the same welding procedure as used on the particular cylinder seam being qualified and must be subjected to the same heat treatment.

(vi) Impact test specimens must be cooled to the design service temperature. The apparatus for testing the specimens must conform to requirements of ASTM Standard E 23. The test piece, as well as the handling tongs, must be cooled for a length of time sufficient to reach the service temperature. The temperature of the cooling device must be maintained within a range of plus or minus 3 °F. The specimen must be quickly transferred from the cooling device to the anvil of the testing machine and broken within a time lapse of not more than six seconds.

(vii) The impact properties of each set of impact specimens may not be less than the values in the following table:

Size of specimen	Minimum impact value required for avg. of each set of three specimens (ft.-lb.)	Minimum impact value permitted on one only of a set of three (ft.-lb.)
10 mm×10 mm	15	10
10 mm×7.5 mm	12.5	8.5
10 mm×5 mm	10	7.0
10 mm×2.5 mm	5	3.5

(viii) When the average value of the three specimens equals or exceeds the minimum value permitted for a single specimen and the value for more than one specimen is below the required average value, or when the value for one specimen is below the minimum value permitted for a single specimen, a retest of three additional specimens must be made. The value of each of these retest specimens must equal or exceed the required average value. When an erratic result is caused by a defective specimen, or there is uncertainty in test procedure, a retest is authorized.

(m) *Radiographic examination.* Cylinders must be subject to a radiographic examination as follows:

(1) The techniques and acceptability of radiographic inspection must conform to the standards set forth in CGA Pamphlet C–3.

(2) One finished longitudinal seam must be selected at random from each lot of 100 or less successively produced and be radiographed throughout its entire length. Should the radiographic examination fail to meet the requirements of paragraph (m)(1) of this section, two additional seams of the same lot must be examined, and if either of these fail to meet the requirements of (m)(1) of this section, only those passing are acceptable.

(n) *Rejected cylinders*. Reheat treatment of rejected cylinders is authorized. Subsequent thereto, cylinders must pass all prescribed tests to be acceptable. Welds may be repaired by suitable methods of fusion welding.

(o) *Authorized materials of construction*. Authorized materials of construction are as follows:

(1) *Inner containment vessel (cylinder)*. Electric furnace steel of uniform quality must be used. Chemical analysis must conform to ASTM A 240/A 240M (IBR, see §171.7 of this subchapter), Type 304 stainless steel. Chemical analysis must conform to ASTM A240, Type 304 Stainless Steel. A heat of steel made under table 1 and table 2 in this paragraph (o)(1) is acceptable, even though its check chemical analysis is slightly out of the specified range, if it is satisfactory in all other respects, provided the tolerances shown in table 3 in this paragraph (o)(1) are not exceeded. The following chemical analyses and physical properties are authorized:

TABLE 1—AUTHORIZED MATERIALS

Designation	Chemical analysis, limits in percent
Carbon [1]	0.08 max.
Manganese	2.00 max.
Phosphorus	0.045 max.
Sulphur	0.030 max.
Silicon	1.00 max.
Nickel	8.00–10.50.
Chromium	18.00–20.00.
Molybdenum	None.
Titanium	None.
Columbium	None.

[1] The carbon analysis must be reported to the nearest hundredth of one percent.

TABLE 2—PHYSICAL PROPERTIES

	Physical properties (annealed)
Tensile strength, p.s.i. (minimum)	75,000
Yield strength, p.s.i. (minimum)	30,000
Elongation in 2 inches (minimum) percent	30.0
Elongation other permissible gauge lengths (minimum) percent	15.0

TABLE 3—CHECK ANALYSIS TOLERANCES

Elements	Limit or specified range (percent)	Tolerance over the maximum limit or under the minimum limit
Carbon	To 0.030, incl	0.005
	Over 0.30 to 0.20, incl	0.01
Manganese	To 1.00 incl	.03
	Over 1.00 to 3.00, incl	0.04
Phosphorus [1]	To 0.040, incl	0.005
	Over 0.040 to 0.020 incl	0.010
Sulphur	To .40 incl	0.005
Silicon	To 1.00, incl	0.05
Nickel	Over 5.00 to 10.00, incl	0.10
	Over 10.00 to 20.00, incl	0.15
Chromium	Over 15.00 to 20.00, incl	0.20

[1] Rephosphorized steels not subject to check analysis for phosphorus.

(2) *Outer jacket*. (i) Nonflammable cryogenic liquids. Cylinders intended for use in the transportation of nonflammable cryogenic liquid must have an outer jacket made of steel or aluminum.

(ii) Flammable cryogenic liquids. Cylinders intended for use in the transportation of flammable cryogenic liquid must have an outer jacket made of steel.

(p) *Markings*. (1) Markings must be stamped plainly and permanently on shoulder or top head of jacket or on a permanently attached plate or head protective ring.

(2) The letters ''ST'', followed by the design service temperature (for example, ST–423F), must be marked on cylinders having a design service temperature of colder than minus 320 °F only. Location to be just below the DOT mark.

(3) The maximum weight of contents, in pounds (for example, ''Max. Content 51 #''), must be marked on cylinders having a design service temperature colder than minus 320 °F only. Location to be near symbol.

(4) Special orientation instructions must be marked on the cylinder (for

example, THIS END UP), if the cylinder is used in an orientation other than vertical with openings at the top of the cylinder.

(5) If the jacket of the cylinder is constructed of aluminum, the letters ''AL'' must be marked after the service pressure marking. Example: DOT-4L150 AL.

(6) Except for serial number and jacket material designation, each marking prescribed in this paragraph (p) must be duplicated on each cylinder by any suitable means.

(q) *Inspector's report.* In addition to the information required by § 178.35, the inspector's reports must contain information on:

(1) The jacket material and insulation type;

(2) The design service temperature (°F); and

(3) The impact test results, on a lot basis.

[Amdt. 178–114, 61 FR 25942, May 23, 1996, as amended at 66 FR 45386–45388, Aug. 28, 2001; 67 FR 51653, Aug. 8, 2002; 68 FR 75748, Dec. 31, 2003]

§ 178.58 Specification 4DA welded steel cylinders for aircraft use.

(a) *Type, size, and service pressure.* A DOT 4DA is a welded steel sphere (two seamless hemispheres) or a circumferentially welded cylinder (two seamless drawn shells) with a water capacity not over 100 pounds and a service pressure of at least 500 but not over 900 psig.

(b) *Steel.* Open-hearth or electric steel of uniform quality must be used. A heat of steel made under table 1 in this paragraph (b), check chemical analysis of which is slightly out of the specified range, is acceptable, if satisfactory in all other respects, provided the tolerances shown in table 2 in this paragraph (b) are not exceeded except as approved by the Associate Administrator. The following chemical analyses are authorized:

TABLE 1—AUTHORIZED MATERIALS

4130	Percent
Carbon	0.28/0.33.
Manganese	0.40/0.60.
Phosphorus	0.040 max.
Sulfur	0.040 max.
Silicon	0.15/0.35.
Chromium	0.80/1.10.
Molybdenum	0.15/0.25.

TABLE 2—CHECK ANALYSIS TOLERANCES

Element	Limit or maximum specified (percent)	Tolerance (percent) over the maximum limit or under the minimum limit	
		Under minimum limit	Over maximum limit
Carbon	Over 0.15 to 0.40 incl	.03	.04
Manganese	To 0.60 incl	.03	.03
Phosphorus[1]	All ranges		.01
Sulphur	All ranges		.01
Silicon	To 0.30 incl	.02	.03
	Over 0.30 to 1.00 incl	.05	.05
Chromium	To 0.90 incl	.03	.03
	Over 0.90 to 2.10 incl	.05	.05
Molybdenum	To 0.20 incl	.01	.01
	Over 0.20 to 0.40, incl	.02	.02

[1] Rephosphorized steels not subject to check analysis for phosphorus.

(c) *Identification of material.* Materials must be identified by any suitable method except that plates and billets for hot-drawn containers must be marked with the heat number.

(d) *Manufacture.* Cylinders must be manufactured in accordance with the following requirements:

(1) By best appliances and methods. No defect is acceptable that is likely to weaken the finished container appreciably. A reasonably smooth and uniform surface finish is required. No abrupt change in wall thickness is permitted. Welding procedures and operators must be qualified in accordance with CGA Pamphlet C–3 (IBR, see § 171.7 of this subchapter).

(2) All seams of the sphere or cylinders must be fusion welded. Seams must be of the butt or joggle butt type and means must be provided for accomplishing complete penetration of the joint.

(e) *Welding.* Attachments to the container are authorized by fusion welding provided that such attachments are made of weldable steel, the carbon content of which may not exceed 0.25 percent except in the case of 4130 steel.

(f) *Wall thickness.* The minimum wall thickness must be such that the wall stress at the minimum specified test pressure may not exceed 67 percent of

the minimum tensile strength of the steel as determined from the physical and burst tests required and may not be over 70,000 p.s.i. For any diameter container, the minimum wall thickness is 0.040 inch. Calculations must be made by the formulas in (f)(1) or (f)(2) of this section:

(1) Calculation for a sphere must be made by the following formula:

$$S = PD / 4tE$$

Where:

S = wall stress in pounds psi;
P = test pressure prescribed for water jacket test, i.e., at least 2 times service pressure, in psig;
D = outside diameter in inches;
t = minimum wall thickness in inches;
E = 0.85 (provides 85 percent weld efficiency factor which must be applied in the girth weld area and heat affected zones which zone must extend a distance of 6 times wall thickness from center line of weld);
E = 1.0 (for all other areas).

(2) Calculation for a cylinder must be made by the following formula:

$$S = [P(1.3D^2 + 0.4d^2)] / (D^2 - d^2)$$

Where:

S = wall stress in pounds psi;
P = test pressure prescribed for water jacket test, i.e., at least 2 times service pressure, in psig;
D = outside diameter in inches;
d = inside diameter in inches.

(g) *Heat treatment*. The completed containers must be uniformly and properly heat-treated prior to tests. Heat-treatment of containers of the authorized analysis must be as follows:

(1) All containers must be quenched by oil, or other suitable medium except as provided in paragraph (g)(4) of this section.

(2) The steel temperature on quenching must be that recommended for the steel analysis, but may not exceed 1,750 °F.

(3) The steel must be tempered at the temperature most suitable for the analysis except that in no case shall the tempering temperature be less than 1,000 °F.

(4) The steel may be normalized at a temperature of 1,650 °F instead of being quenched, and containers so normalized need not be tempered.

(5) All cylinders, if water quenched or quenched with a liquid producing a cooling rate in excess of 80 percent of the cooling rate of water, must be inspected by the magnetic particle or dye penetrant method to detect the presence of quenching cracks. Any cylinder found to have a quench crack must be rejected and may not be requalified.

(h) *Openings in container*. Openings in the container must comply with the following requirements:

(1) Each opening in the container must be provided with a fitting, boss, or pad of weldable steel securely attached to the container by fusion welding.

(2) Attachments to a fitting, boss, or pad must be adequate to prevent leakage. Threads must comply with the following:

(i) Threads must be clean cut, even, without checks, and tapped to gauge.

(ii) Taper threads to be of length not less than as specified for American Standard taper pipe threads.

(iii) Straight threads, having at least 4 engaged threads, to have tight fit and calculated shear strength at least 10 times the test pressure of the container; gaskets required, adequate to prevent leakage.

(i) *Hydrostatic test*. Each cylinder must successfully withstand a hydrostatic test as follows:

(1) The test must be by water-jacket, or other suitable method, operated so as to obtain accurate data. The pressure gauge must permit reading to an accuracy of 1 percent. The expansion gauge must permit reading of total expansion to accuracy either of 1 percent or 0.1 cubic centimeter.

(2) Pressure must be maintained for at least 30 seconds and sufficiently longer to ensure complete expansion. Any internal pressure applied after heat-treatment and previous to the official test may not exceed 90 percent of the test pressure. If, due to failure of the test apparatus, the test pressure cannot be maintained, the test may be repeated at a pressure increased by 10 percent or 100 psig, whichever is the lower.

(3) Permanent volumetric expansion may not exceed 10 percent of total volumetric expansion at test pressure.

(4) Each container must be tested to at least 2 times service pressure.

(j) *Burst test.* One container taken at random out of 200 or less must be hydrostatically tested to destruction. The rupture pressure must be included as part of the inspector's report.

(k) *Flattening test.* Spheres and cylinders must be subjected to a flattening test as follows:

(1) *Flattening test for spheres.* One sphere taken at random out of each lot of 200 or less must be subjected to a flattening test as follows:

(i) The test must be performed after the hydrostatic test.

(ii) The test must be at the weld between the parallel steel plates on a press with a welded seam, at right angles to the plates. Any projecting appurtenances may be cut off (by mechanical means only) prior to crushing.

(2) *Flattening test for cylinders.* One cylinder taken at random out of each lot of 200 or less, must be subjected to a flattening test as follows:

(i) The test must be performed after the hydrostatic test.

(ii) The test cylinder must be placed between wedge-shaped knife edges having a 60° angle, rounded to a ½-inch radius.

(l) *Radiographic inspection.* Radiographic examinations is required on all welded joints which are subjected to internal pressure, except that at the discretion of the disinterested inspector, openings less than 25 percent of the sphere diameter need not be subjected to radiographic inspection. Evidence of any defects likely to seriously weaken the container must be cause for rejection.

(m) *Physical test and specimens for spheres and cylinders.* Spheres and cylinders must be subjected to a physical test as follows:

(1) A physical test for a sphere is required on 2 specimens cut from a flat representative sample plate of the same heat taken at random from the steel used to produce the sphere. This flat steel from which the 2 specimens are to be cut must receive the same heat-treatment as the spheres themselves. Sample plates to be taken for each lot of 200 or less spheres.

(2) Specimens for spheres have a gauge length of 2 inches with a width not over 1½ inches, or a gauge length at least 24 times thickness with a width not over 6 times thickness is authorized when wall of sphere is not over 3/16 inch thick.

(3) A physical test for cylinders is required on 2 specimens cut from 1 cylinder taken at random out of each lot of 200 or less.

(4) Specimens for cylinder must conform to the following:

(i) A gauge length of 8 inches with a width not over 1½ inches, a gauge length of 2 inches with a width not over 1½ inches, a gauge length at least 24 times thickness with a width not over 6 times thickness is authorized when a cylinder wall is not over 3/16 inch thick.

(ii) The specimen, exclusive of grip ends, may not be flattened. Grip ends may be flattened to within 1 inch of each end of the reduced section.

(iii) Heating of a specimen for any purpose is not authorized.

(5) The yield strength in tension must be the stress corresponding to a permanent strain of 0.2 percent of the gauge length. The following conditions apply:

(i) The yield strength must be determined by either the ''offset'' method or the ''extension under load'' method as prescribed in ASTM E 8 (IBR, see § 171.7 of this subchapter).

(ii) In using the ''extension under load'' method, the total strain (or ''extension under load'') corresponding to the stress at which the 0.2 percent permanent strain occurs may be determined with sufficient accuracy by calculating the elastic extension of the gauge length under appropriate load and adding thereto 0.2 percent of the gauge length. Elastic extension calculations must be based on an elastic modulus of 30,000,000. In the event of controversy, the entire stress-strain diagram must be plotted and the yield strength determined from the 0.2 percent offset.

(iii) For the purpose of strain measurement, the initial strain must be set while the specimen is under a stress of 12,000 psi and the strain indicator reading being set at the calculated corresponding strain.

(iv) Cross-head speed of the testing machine may not exceed ⅛ inch per minute during yield strength determination.

(n) *Acceptable results for physical, flattening, and burst tests.* The following are acceptable results of the physical, flattening and burst test:

(1) Elongation must be at least 20 percent for a 2-inch gauge length or 10 percent in other cases.

(2) Flattening is required to 50 percent of the original outside diameter without cracking.

(3) Burst pressure must be at least 3 times service pressure.

(o) *Rejected containers.* Reheat-treatment of rejected cylinders is authorized. Subsequent thereto, containers must pass all prescribed tests to be acceptable. Repair of welded seams by welding prior to reheat-treatment is authorized.

(p) *Marking.* Markings on each container must be stamped plainly and permanently on a permanent attachment or on a metal nameplate permanently secured to the container by means other than soft solder.

[Amdt. 178–114, 61 FR 25942, May 23, 1996, as amended at 66 FR 45386, 45388, Aug. 28, 2001; 67 FR 51654, Aug. 8, 2002; 67 FR 61015, Sept. 27, 2002; 68 FR 75748, Dec. 31, 2003]

§ 178.59 Specification 8 steel cylinders with porous fillings for acetylene.

(a) *Type and service pressure.* A DOT 8 cylinder is a seamless cylinder with a service pressure of 250 psig. The following steel is authorized:

(1) A longitudinal seam if forge lap welded;

(2) Attachment of heads by welding or by brazing by dipping process; or

(3) A welded circumferential body seam if the cylinder has no longitudinal seam.

(b) *Steel.* Open-hearth, electric or basic oxygen process steel of uniform quality must be used. Content percent may not exceed the following: Carbon, 0.25; phosphorus, 0.045; sulphur, 0.050.

(c) *Identification of steel.* Materials must be identified by any suitable method except that plates and billets for hot-drawn cylinders must be marked with the heat number.

(d) *Manufacture.* Cylinders must be manufactured using equipment and processes adequate to ensure that each cylinder produced conforms to the requirements of this subpart. No defect is acceptable that is likely to weaken the finished cylinder appreciably. A reasonably smooth and uniform surface finish is required. Welding procedures and operators must be qualified in accordance with CGA Pamphlet C–3 (IBR, see § 171.7 of this subchapter).

(e) *Exposed bottom welds.* Exposed bottom welds on cylinders over 18 inches long must be protected by footrings.

(f) *Heat treatment.* Body and heads formed by drawing or pressing must be uniformly and properly heat treated prior to tests.

(g) *Openings.* Openings in the cylinders must comply with the following:

(1) Standard taper pipe threads are required;

(2) Length may not be less than as specified for American Standard pipe threads; tapped to gauge; clean cut, even, and without checks.

(h) *Hydrostatic test.* Each cylinder must successfully withstand a hydrostatic test as follows:

(1) The test must be by water-jacket, or other suitable method, operated so as to obtain accurate data. The pressure gauge must permit reading to an accuracy of 1 percent. The expansion gauge must permit reading of total expansion to an accuracy of either 1 percent or 0.1 cubic centimeter.

(2) Pressure must be maintained for at least 30 seconds and sufficiently longer to ensure complete expansion. Any internal pressure applied after heat-treatment and previous to the official test may not exceed 90 percent of the test pressure.

(3) Permanent volumetric expansion may not exceed 10 percent of total volumetric expansion at test pressure.

(4) One cylinder out of each lot of 200 or less must be hydrostatically tested to at least 750 psig. Cylinders not so tested must be examined under pressure of between 500 and 600 psig and show no defect. If hydrostatically tested cylinder fails, each cylinder in the lot may be hydrostatically tested and those passing are acceptable.

(i) *Leakage test.* Cylinders with bottoms closed in by spinning must be subjected to a leakage test by setting the interior air or gas pressure to not less than the service pressure. Cylinders which leak must be rejected.

(j) *Physical test.* A physical test must be conducted as follows:

(1) The test is required on 2 specimens cut longitudinally from 1 cylinder or part thereof taken at random out of each lot of 200 or less, after heat treatment.

(2) Specimens must conform to a gauge length of 8 inches with a width not over 1½ inches, a gauge length of 2 inches with width not over 1½, or a gauge length at least 24 times thickness with a width not over 6 times thickness is authorized when a cylinder wall is not over 3/16 inch thick.

(3) The yield strength in tension must be the stress corresponding to a permanent strain of 0.2 percent of the gauge length. The following conditions apply:

(i) The yield strength must be determined by either the ''offset'' method or the ''extension under load'' method as prescribed in ASTM E 8 (IBR, see §171.7 of this subchapter).

(ii) In using the ''extension under load'' method, the total strain (or ''extension under load'') corresponding to the stress at which the 0.2 percent permanent strain occurs may be determined with sufficient accuracy by calculating the elastic extension of the gauge length under appropriate load and adding thereto 0.2 percent of the gauge length. Elastic extension calculations must be based on an elastic modulus of 30,000,000. In the event of controversy, the entire stress-strain diagram must be plotted and the yield strength determined from the 0.2 offset.

(iii) For the purpose of strain measurement, the initial strain must be set while the specimen is under a stress of 12,000 psi and the strain indicator reading being set at the calculated corresponding strain.

(iv) Cross-head speed of the testing machine may not exceed ⅛ inch per minute during yield strength determination.

(4) Yield strength may not exceed 73 percent of tensile strength. Elongation must be at least 40 percent in 2 inch or 20 percent in other cases.

(k) *Rejected cylinders.* Reheat treatment of rejected cylinder is authorized. Subsequent thereto, cylinders must pass all prescribed tests to be acceptable. Repair by welding is authorized.

(l) *Porous filling.* (1) Cylinders must be filled with a porous material in accordance with the following:

(i) The porous material may not disintegrate or sag when wet with solvent or when subjected to normal service;

(ii) The porous filling material must be uniform in quality and free of voids, except that a well drilled into the filling material beneath the valve is authorized if the well is filled with a material of such type that the functions of the filling material are not impaired;

(iii) Overall shrinkage of the filling material is authorized if the total clearance between the cylinder shell and filling material, after solvent has been added, does not exceed ½ of 1 percent of the respective diameter or length, but not to exceed ⅛ inch, measured diametrically and longitudinally;

(iv) The clearance may not impair the functions of the filling material;

(v) The installed filling material must meet the requirements of CGA C–12 (IBR, see §171.7 of this subchapter); and

(vi) Porosity of filling material may not exceed 80 percent except that filling material with a porosity of up to 92 percent may be used when tested with satisfactory results in accordance with CGA Pamphlet C–12.

(2) When the porosity of each cylinder is not known, a cylinder taken at random from a lot of 200 or less must be tested for porosity. If the test cylinder fails, each cylinder in the lot may be tested individually and those cylinders that pass the test are acceptable.

(3) For filling that is molded and dried before insertion in cylinders, porosity test may be made on a sample block taken at random from material to be used.

(4) The porosity of the filling material must be determined. The amount of solvent at 70 °F for a cylinder:

(i) Having shell volumetric capacity above 20 pounds water capacity (nominal) may not exceed the following:

Percent porosity of filler	Maximum acetone solvent percent shell capacity by volume
90 to 92	43.4

Percent porosity of filler	Maximum acetone solvent percent shell capacity by volume
87 to 90	42.0
83 to 87	40.0
80 to 83	38.6
75 to 80	36.2
70 to 75	33.8
65 to 70	31.4

(ii) Having volumetric capacity of 20 pounds or less water capacity (nominal), may not exceed the following:

Percent porosity of filler	Maximum acetone solvent percent shell capacity by volume
90 to 92	41.8
83 to 90	38.5
80 to 83	37.1
75 to 80	34.8
70 to 75	32.5
65 to 70	30.2

(m) *Tare weight*. The tare weight is the combined weight of the cylinder proper, porous filling, valve, and solvent, without removable cap.

(n) *Duties of inspector*. In addition to the requirements of § 178.35, the inspector is required to—

(1) Certify chemical analyses of steel used, signed by manufacturer thereof; also verify by, check analyses of samples taken from each heat or from 1 out of each lot of 200 or less, plates, shells, or tubes used.

(2) Verify compliance of cylinder shells with all shell requirements; inspect inside before closing in both ends; verify heat treatment as proper; obtain all samples for all tests and for check analyses; witness all tests; verify threads by gauge; report volumetric capacity and minimum thickness of wall noted.

(3) Prepare report on manufacture of steel shells in form prescribed in § 178.35. Furnish one copy to manufacturer and three copies to the company that is to complete the cylinders.

(4) Determine porosity of filling and tare weights; verify compliance of marking with prescribed requirements; obtain necessary copies of steel shell reports; and furnish complete reports required by this specification to the person who has completed the manufacture of the cylinders and, upon request, to the purchaser. The test reports must be retained by the inspector for fifteen years from the original test date of the cylinder.

(o) *Marking*. (1) Marking on each cylinder must be stamped plainly and permanently on or near the shoulder, top head, neck or valve protection collar which is permanently attached to the cylinder and forming integral part thereof.

(2) Tare weight of cylinder, in pounds and ounces, must be marked on the cylinder.

(3) Cylinders, not completed, when delivered must each be marked for identification of each lot of 200 or less.

[Amdt. 178–114, 61 FR 25942, May 23, 1996, as amended at 66 FR 45386, Aug. 28, 2001; 67 FR 61016, Sept. 27, 2002; 67 FR 51654, Aug. 8, 2002; 68 FR 75748, 75749, Dec. 31, 2003]

§ 178.60 Specification 8AL steel cylinders with porous fillings for acetylene.

(a) *Type and service pressure*. A DOT 8AL cylinder is a seamless steel cylinder with a service pressure of 250 psig. However, the attachment of heads by welding or by brazing by dipping process and a welded circumferential body seam is authorized. Longitudinal seams are not authorized.

(b) *Authorized steel*. The authorized steel is as specified in table I of appendix A to this part.

(c) *Identification of steel*. Material must be identified by any suitable method except that plates and billets for hot-drawn cylinders must be marked with heat number.

(d) *Manufacture*. Cylinders must be manufactured using equipment and processes adequate to ensure that each cylinder produced conforms to the requirements of this subpart. No defect is permitted that is likely to weaken the finished cylinder appreciably. A reasonably smooth and uniform surface finish is required. Welding procedures and operators must be qualified in accordance with CGA Pamphlet C–3 (IBR, see § 171.7 of this subchapter).

(e) *Footrings*. Exposed bottom welds on cylinders over 18 inches long must be protected by footrings.

(f) *Welding or brazing.* Welding or brazing for any purpose whatsoever is prohibited except as follows:

(1) The attachment to the tops or bottoms of cylinders of neckrings, footrings, handlers, bosses, pads, and valve protecting rings is authorized provided that such attachments and the portion of the container to which they are attached are made of weldable steel, the carbon content of which may not exceed 0.25 percent.

(2) Heat treatment is not required after welding or brazing weldable low carbon parts to attachments, specified in paragraph (f)(1) of this section, of similar material which have been previously welded or brazed to the top or bottom of cylinders and properly heat treated, provided such subsequent welding or brazing does not produce a temperature in excess of 400 °F in any part of the top or bottom material.

(g) *Wall thickness; wall stress.* The wall thickness/wall stress of the cylinder must conform to the following:

(1) The calculated wall stress at 750 psi may not exceed 35,000 psi, or one-half of the minimum ultimate strength of the steel as determined in paragraph (l) of this section, whichever value is the smaller. The measured wall thickness may not include galvanizing or other protective coating.

(i) Calculation of wall stress must be made by the formula:

$$S = [P(1.3D^2 + 0.4d^2)] / (D^2 - d^2)$$

Where:

S = wall stress in pounds psi;
P = 750 psig (minimum test pressure);
D = outside diameter in inches;
d = inside diameter in inches.

(ii) Either D or d must be calculated from the relation D = d + 2t, where t = minimum wall thickness.

(2) Cylinders with a wall thickness less than 0.100 inch, the ratio of straight side wall length to outside diameter may not exceed 3.5.

(3) For cylinders having outside diameter over 5 inches, the minimum wall thickness must be 0.087 inch.

(h) *Heat treatment.* Each cylinder must be uniformly and properly heat treated, prior to tests, by any suitable method in excess of 1100 °F. Heat treatment must be accomplished after all forming and welding operations, except that when brazed joints are used, heat treatment must follow any forming and welding operations but may be done before, during, or after the brazing operations. Liquid quenching is not authorized.

(i) *Openings.* Standard taper pipe threads required in all openings. The length of the opening may not be less than as specified for American Standard pipe threads; tapped to gauge; clean cut, even, and without checks.

(j) *Hydrostatic test.* Each cylinder must successfully withstand a hydrostatic test as follows:

(1) The test must be by water-jacket, or other suitable method, operated so as to obtain accurate data. The pressure gauge must permit reading to an accuracy of 1 percent. The expansion gauge must permit reading of total expansion to an accuracy of either 1 percent or 0.1 cubic centimeter.

(2) Pressure must be maintained for at least 30 seconds and sufficiently longer to ensure complete expansion. Any internal pressure applied after heat-treatment and previous to the official test may not exceed 90 percent of the test pressure.

(3) Permanent volumetric expansion may not exceed 10 percent of total volumetric expansion at test pressure.

(4) One cylinder out of each lot of 200 or less must be hydrostatically tested to at least 750 psig. Cylinders not so tested must be examined under pressure of between 500 and 600 psig and show no defect. If a hydrostatically tested cylinder fails, each cylinder in the lot may be hydrostatically tested and those passing are acceptable.

(k) *Leakage test.* Cylinders with bottoms closed in by spinning must be leakage tested by setting the interior air or gas pressure at not less than the service pressure. Any cylinder that leaks must be rejected.

(l) *Physical test.* A physical test must be conducted as follows;

(1) The test is required on 2 specimens cut longitudinally from 1 cylinder or part thereof taken at random out of each lot of 200 or less, after heat treatment.

(2) Specimens must conform to a gauge length of 8 inches with a width not over 1½ inches, a gauge length 2 inches with a width not over 1½ inches,

or a gauge length at least 24 times thickness with a width not over 6 times thickness is authorized when a cylinder wall is not over 3/16 inch thick.

(3) The yield strength in tension must be the stress corresponding to a permanent strain of 0.2 percent of the gauge length. The following conditions apply:

(i) The yield strength must be determined by either the ''offset'' method or the ''extension under load'' method as prescribed in ASTM E 8 (IBR, see § 171.7 of this subchapter).

(ii) In using the ''extension under load'' method, the total strain (or ''extension under load'') corresponding to the stress at which the 0.2 percent permanent strain occurs may be determined with sufficient accuracy by calculating the elastic extension of the gauge length under appropriate load and adding thereto 0.2 percent of the gauge length. Elastic extension calculations must be based on an elastic modulus of 30,000,000. In the event of controversy, the entire stress-strain diagram must be plotted and the yield strength determined from the 0.2 offset.

(iii) For the purpose of strain measurement, the initial strain must be set while the specimen is under a stress of 12,000 psi, the strain indicator reading being set at the calculated corresponding strain.

(iv) Cross-head speed of the testing machine may not exceed 1/8 inch per minute during yield strength determination.

(m) *Elongation.* Physical test specimens must show at least a 40 percent elongation for a 2 inch gauge length or at least a 20 percent elongation in other cases. Except that these elongation percentages may be reduced numerically by 2 for 2 inch specimens and 1 in other cases for each 7,500 psi increment of tensile strength above 50,000 psi to a maximum of four such increments.

(n) *Weld tests.* Specimens taken across the circumferentially welded seam must be cut from one cylinder taken at random from each lot of 200 or less cylinders after heat treatment and must pass satisfactorily the following tests:

(1) *Tensile test.* A specimen must be cut from one cylinder of each lot of 200 or less, or welded test plate. The specimen must be taken from across the major seam and must be prepared and tested in accordance with and must meet the requirements of CGA Pamphlet C–3. Should this specimen fail to meet the requirements, specimens may be taken from two additional cylinders or welded test plates from the same lot and tested. If either of the latter specimens fail to meet the requirements, the entire lot represented must be rejected.

(2) *Guided bend test.* A root bend test specimen must be cut from the cylinder or welded test plate, used for the tensile test specified in paragraph (n)(1) of this section. Specimens must be prepared and tested in accordance with and must meet the requirements of CGA Pamphlet C–3.

(3) *Alternate guided-bend test.* This test may be used and must be as required by CGA Pamphlet C–3. The specimen must be bent until the elongation at the outer surface, adjacent to the root of the weld, between the lightly scribed gage lines-a to b, must be at least 20 percent, except that this percentage may be reduced for steels having a tensile strength in excess of 50,000 psi, as provided in paragraph (m) of this section.

(o) *Rejected cylinders.* Reheat treatment of rejected cylinders is authorized. Subsequent thereto, cylinders must pass all prescribed tests to be acceptable. Repair by welding is authorized.

(p) *Porous filling.* (1) Cylinders must be filled with a porous material in accordance with the following:

(i) The porous material may not disintegrate or sag when wet with solvent or when subjected to normal service;

(ii) The filling material must be uniform in quality and free of voids, except that a well drilled into the filling material beneath the valve is authorized if the well is filled with a material of such type that the functions of the filling material are not impaired;

(iii) Overall shrinkage of the filling material is authorized if the total clearance between the cylinder shell and filling material, after solvent has

been added, does not exceed ½ of 1 percent of the respective diameter or length but not to exceed ⅛ inch, measured diametrically and longitudinally;

(iv) The clearance may not impair the functions of the filling material;

(v) The installed filling material must meet the requirements of CGA C–12 (IBR, see §171.7 of this subchapter); and

(vi) Porosity of filling material may not exceed 80 percent except that filling material with a porosity of up to 92 percent may be used when tested with satisfactory results in accordance with CGA Pamphlet C–12.

(2) When the porosity of each cylinder is not known, a cylinder taken at random from a lot of 200 or less must be tested for porosity. If the test cylinder fails, each cylinder in the lot may be tested individually and those cylinders that pass the test are acceptable.

(3) For filling that is molded and dried before insertion in cylinders, porosity test may be made on sample block taken at random from material to be used.

(4) The porosity of the filling material must be determined; the amount of solvent at 70 °F for a cylinder:

(i) Having shell volumetric capacity above 20 pounds water capacity (nominal) may not exceed the following:

Percent porosity of filler	Maximum acetone solvent percent shell capacity by volume
90 to 92	43.4
87 to 90	42.0
83 to 87	40.0
80 to 83	38.6
75 to 80	36.2
70 to 75	33.8
65 to 70	31.4

(ii) Having volumetric capacity of 20 pounds or less water capacity (nominal), may not exceed the following:

Percent porosity of filler	Maximum acetone solvent percent shell capacity by volume
90 to 92	41.8
83 to 90	38.5
80 to 83	37.1
75 to 80	34.8
70 to 75	32.5
65 to 70	30.2

(q) *Tare weight*. The tare weight is the combined weight of the cylinder proper, porous filling, valve, and solvent, but without removable cap.

(r) *Duties of inspector*. In addition to the requirements of §178.35, the inspector shall—

(1) Certify chemical analyses of steel used, signed by manufacturer thereof; also verify by check analyses, of samples taken from each heat or from 1 out of each lot of 200 or less plates, shells, or tubes used.

(2) Verify compliance of cylinder shells with all shell requirements, inspect inside before closing in both ends, verify heat treatment as proper; obtain all samples for all tests and for check analyses, witness all tests; verify threads by gauge, report volumetric capacity and minimum thickness of wall noted.

(3) Report percentage of each specified alloying element in the steel. Prepare report on manufacture of steel shells in form prescribed in §178.35. Furnish one copy to manufacturer and three copies to the company that is to complete the cylinders.

(4) Determine porosity of filling and tare weights; verify compliance of marking with prescribed requirements; obtain necessary copies of steel shell reports prescribed in paragraph (b) of this section; and furnish complete test reports required by this specification to the person who has completed the manufacturer of the cylinders and, upon request, to the purchaser. The test reports must be retained by the inspector for fifteen years from the original test date of the cylinder.

(s) *Marking*. (1) Tare weight of cylinder, in pounds and ounces, must be marked on the cylinder.

(2) Cylinders, not completed, when delivered must each be marked for identification of each lot of 200 or less.

(3) Markings must be stamped plainly and permanently in locations in accordance with the following:

(i) On shoulders and top heads not less than 0.087 inch thick; or

(ii) On neck, valve boss, valve protection sleeve, or similar part permanently attached to the top end of cylinder; or

(iii) On a plate of ferrous material attached to the top of the cylinder or permanent part thereof; the plate must be at least 1/16 inch thick, and must be

attached by welding, or by brazing at a temperature of at least 1,100 °F throughout all edges of the plate. Sufficient space must be left on the plate to provide for stamping at least four (4) retest dates.

[Amdt. 178–114, 61 FR 25942, May 23, 1996, as amended at 66 FR 45386, 45388, Aug. 28, 2001; 67 FR 51654, Aug. 8, 2002; 68 FR 75748, 75749, Dec. 31, 2003]

§ 178.61 Specification 4BW welded steel cylinders with electric-arc welded longitudinal seam.

(a) *Type, size and service pressure.* A DOT 4BW cylinder is a welded type steel cylinder with a longitudinal electric-arc welded seam, a water capacity (nominal) not over 1,000 pounds and a service pressure at least 225 and not over 500 psig gauge. Cylinders closed in by spinning process are not authorized.

(b) *Authorized steel.* Steel used in the construction of the cylinder must conform to the following:

(1) The body of the cylinder must be constructed of steel conforming to the limits specified in table 1 of appendix A to this part.

(2) Material for heads must meet the requirements of paragraph (b)(1) of this section or be open hearth, electric or basic oxygen carbon steel of uniform quality. Content percent may not exceed the following: Carbon 0.25, Manganese 0.60, Phosphorus 0.045, Sulfur 0.050. Heads must be hemispherical or ellipsoidal in shape with a maximum ratio of 2.1. If low carbon steel is used, the thickness of such heads must be determined by using a maximum wall stress of 24,000 p.s.i. in the formula described in paragraph (f)(4) of this section.

(c) *Identification of material.* Material must be identified by any suitable method.

(d) *Manufacture.* Cylinders must be manufactured using equipment and processes adequate to ensure that each cylinder produced conforms to the requirements of this subpart and the following:

(1) No defect is permitted that is likely to weaken the finished cylinder appreciably. A reasonably smooth and uniform surface is required. Exposed bottom welds on cylinders over 18 inches long must be protected by footrings. Minimum thickness of heads may not be less than 90 percent of the required thickness of the sidewall. Heads must be concave to pressure.

(2) Circumferential seams must be by electric-arc welding. Joints must be butt with one member offset (joggle butt) or lap with minimum overlap of at least four times nominal sheet thickness.

(3) Longitudinal seams in shells must conform to the following:

(i) Longitudinal electric-arc welded seams must be of the butt welded type. Welds must be made by a machine process including automatic feed and welding guidance mechanisms. Longitudinal seams must have complete joint penetration, and must be free from undercuts, overlaps or abrupt ridges or valleys. Misalignment of mating butt edges may not exceed ⅙ of nominal sheet thickness or 1/32 inch whichever is less. All joints with nominal sheet thickness up to and including ⅛ inch must be tightly butted. When nominal sheet thickness is greater than ⅛ inch, the joint must be gapped with maximum distance equal to one-half the nominal sheet thickness or 1/32 inch whichever is less. Joint design, preparation and fit-up must be such that requirements of this paragraph (d) are satisfied.

(ii) Maximum joint efficiency must be 1.0 when each seam is radiographed completely. Maximum joint efficiency must be 0.90 when one cylinder from each lot of 50 consecutively welded cylinders is spot radiographed. In addition, one out of the first five cylinders welded following a shut down of welding operations exceeding four hours must be spot radiographed. Spot radiographs, when required, must be made of a finished welded cylinder and must include the girth weld for 2 inches in both directions from the intersection of the longitudinal and girth welds and include at least 6 inches of the longitudinal weld. Maximum joint efficacy of 0.75 must be permissible without radiography.

(4) Welding procedures and operators must be qualified in accordance with CGA Pamphlet C–3 (IBR, see §171.7 of this subchapter).

(e) *Welding of attachments.* The attachment to the tops and bottoms only

of cylinders by welding of neckrings, footrings, handles, bosses, pads and valve protection rings is authorized provided that such attachments and the portion of the container to which they are attached are made of weldable steel, the carbon content of which may not exceed 0.25 percent.

(f) *Wall thickness.* For outside diameters over 6 inches the minimum wall thickness must be 0.078 inch. For a cylinder with a wall thickness less than 0.100 inch, the ratio of tangential length to outside diameter may not exceed 4 to1 (4:1). In any case the minimum wall thickness must be such that the wall stress calculated by the formula listed in paragraph (f)(4) of this section may not exceed the lesser value of any of the following:

(1) The value referenced in paragraph (b) of this section for the particular material under consideration.

(2) One-half of the minimum tensile strength of the material determined as required in paragraph (j) of this section.

(3) 35,000 psi.

(4) Stress must be calculated by the following formula:

$$S = [2P(1.3D^2 + 0.4d^2)] / [E(D^2 - d^2)]$$

where:

S = wall stress, psi;
P = service pressure, psig;
D = outside diameter, inches;
d = inside diameter, inches;
E = joint efficiency of the longitudinal seam (from paragraph (d) of this section).

(g) *Heat treatment.* Each cylinder must be uniformly and properly heat treated prior to test by the applicable method referenced in Table 1 of appendix A to this part. Heat treatment must be accomplished after all forming and welding operations. Heat treatment is not required after welding or brazing of weldable low carbon parts to attachments of similar material which have been previously welded to the top or bottom of cylinders and properly heat treated, provided such subsequent welding or brazing does not produce a temperature in excess of 400 °F in any part of the top or bottom material.

(h) *Openings in cylinders.* Openings in the cylinder must conform to the following:

(1) All openings must be in the heads or bases.

(2) Openings in cylinders must be provided with adequate fittings, bosses, or pads, integral with or securely attached to the cylinder by welding.

(3) Threads must comply with the following:

(i) Threads must be clean cut and to gauge.

(ii) Taper threads must be of length not less than as specified for American Standard Taper Pipe threads.

(iii) Straight threads, having at least 4 engaged threads, to have tight fit and calculated shear strength at least 10 times the test pressure of the cylinder; gaskets required, adequate to prevent leakage.

(4) Closure of fittings, boss or pads must be adequate to prevent leakage.

(i) *Hydrostatic test.* Cylinders must withstand a hydrostatic test, as follows:

(1) The test must be by water-jacket, or other suitable method, operated so as to obtain accurate data. The pressure gauge must permit readings to an accuracy of 1 percent. The expansion gauge must permit readings of total volumetric expansion to an accuracy either of 1 percent or 0.1 cubic centimeter.

(2) Pressure must be maintained for at least 30 seconds and sufficiently longer to ensure complete expansion. Any internal pressure applied after heat treatment and previous to the official test may not exceed 90 percent of the test pressure.

(3) Permanent volumetric expansion may not exceed 10 percent of the total volumetric expansion at test pressure.

(4) Cylinders must be tested as follows:

(i) At least 1 cylinder selected at random out of each lot of 200 or less must be tested as outlined in paragraphs (i)(1), (i)(2), and (i)(3) of this section to at least two times service pressure.

(ii) All cylinders not tested as outlined in paragraph (i)(4)(i) of this section must be examined under pressure of at least two times service pressure and show no defect.

(5) One finished cylinder selected at random out of each lot of 500 or less successively produced must be

hydrostatically tested to 4 times service pressure without bursting.

(j) *Physical tests.* Cylinders must be subjected to a physical test as follows:

(1) Specimens must be taken from one cylinder after heat treatment and chosen at random from each lot of 200 or less, as follows:

(i) Body specimen. One specimen must be taken longitudinally from the body section at least 90 degrees away from the weld.

(ii) Head specimen. One specimen must be taken from either head on a cylinder when both heads are made of the same material. However, if the two heads are made of differing materials, a specimen must be taken from each head.

(iii) If due to welded attachments on the top head there is insufficient surface from which to take a specimen, it may be taken from a representative head of the same heat treatment as the test cylinder.

(2) Specimens must conform to the following:

(i) A gauge length of 8 inches with a width not over 1½ inches, a gauge length of 2 inches with a width not over 1½ inches, or a gauge length at least 24 times thickness with a width not over 6 times thickness is authorized when a cylinder wall is not over 3/16 inch thick.

(ii) The specimen, exclusive of grip ends, may not be flattened. Grip ends may be flattened to within 1 inch of each end of the reduced section.

(iii) When size of the cylinder does not permit securing straight specimens, the specimens may be taken in any location or direction and may be straightened or flattened cold, by pressure only, not by blows when specimens are so taken and prepared, the inspector's report must show in connection with record of physical tests detailed information in regard to such specimens.

(iv) Heating of a specimen for any purpose is not authorized.

(3) The yield strength in tension must be the stress corresponding to a permanent strain of 0.2 percent of the gauge length. The following conditions apply:

(i) The yield strength must be determined by either the ''off-set'' method or the ''extension under load'' method as prescribed in ASTM E 8 (IBR, see §171.7 of this subchapter).

(ii) In using the ''extension under load'' method, the total strain (or ''extension under load''), corresponding to the stress at which the 0.2-percent permanent strain occurs may be determined with sufficient accuracy by calculating the elastic extension of the gauge length under appropriate load and adding thereto 0.2 percent of the gauge length. Elastic extension calculations must be based on an elastic modulus of 30,000,000. In the event of controversy, the entire stress-strain diagram must be plotted and the yield strength determined from the 0.2-percent offset.

(iii) For the purpose of strain measurement, the initial strain reference must be set while the specimen is under a stress of 12,000 psi and the strain indicator reading being set at the calculated corresponding strain.

(iv) Cross-head speed of the testing machine may not exceed ⅛ inch per minute during yield strength determination.

(k) *Elongation.* Physical test specimens must show at least a 40 percent elongation for a 2-inch gauge length or at least a 20 percent elongation in other cases. Except that these elongation percentages may be reduced numerically by 2 for 2-inch specimens and by 1 in other cases for each 7,500 psi increment of tensile strength above 50,000 psi to a maximum of four increments.

(l) *Tests of welds.* Welds must be subjected to the following tests:

(1) *Tensile test.* A specimen must be cut from one cylinder of each lot of 200 or less. The specimen must be taken from across the longitudinal seam and must be prepared and tested in accordance with and must meet the requirements of CGA Pamphlet C–3.

(2) *Guided bend test.* A root test specimen must be cut from the cylinder used for the tensile test specified in paragraph (l)(1) of this section. Specimens must be taken from across the longitudinal seam and must be prepared and tested in accordance with and must meet the requirements of CGA Pamphlet C–3.

(3) *Alternate guided bend test.* This test may be used and must be as required by CGA Pamphlet C–3. The specimen must be bent until the elongation at the outer surface, adjacent to the root of the weld, between the lightly scribed gauge lines a to b, must be at least 20 percent, except that this percentage may be reduced for steels having a tensile strength in excess of 50,000 psi, as provided in paragraph (k) of this section.

(m) *Radiographic examination.* Welds of the cylinders must be subjected to a radiographic examination as follows:

(1) Radiographic inspection must conform to the techniques and acceptability criteria set forth in CGA Pamphlet C–3. When fluoroscopic inspection is used, permanent film records need not be retained.

(2) Should spot radiographic examination fail to meet the requirements of paragraph (m)(1) of this section, two additional welds from the same lot of 50 cylinders or less must be examined, and if either of these fail to meet the requirements, each cylinder must be examined as previously outlined; only those passing are acceptable.

(n) *Rejected cylinders.* (1) Unless otherwise stated, if a sample cylinder or specimen taken from a lot of cylinders fails the prescribed test, then two additional specimens must be selected from the same lot and subjected to the prescribed test. If either of these fails the test, then the entire lot must be rejected.

(2) Reheat treatment of rejected cylinders is authorized. Subsequent thereto, cylinders must pass all prescribed tests to be acceptable. Repair of welded seams by welding is authorized provided that all defective metal is cut away and the joint is rewelded as prescribed for original welded joints.

(o) *Markings.* Markings must be stamped plainly and permanently in any of the following locations on the cylinder:

(1) On shoulders and top heads when they are not less than 0.087-inch thick.

(2) On a metal plate attached to the top of the cylinder or permanent part thereof; sufficient space must be left on the plate to provide for stamping at least six retest dates; the plate must be at least 1/16-inch thick and must be attached by welding, or by brazing. The brazing rod is to melt at a temperature of 1100 °F Welding or brazing must be along all the edges of the plate.

(3) On the neck, valve boss, valve protection sleeve, or similar part permanently attached to the top of the cylinder.

(4) On the footring permanently attached to the cylinder, provided the water capacity of the cylinder does not exceed 25 pounds.

(p) *Inspector's report.* In addition to the information required by § 178.35, the inspector's report must indicate the type and amount of radiography.

[Amdt. 178–114, 61 FR 25942, May 23, 1996, as amended at 64 FR 51919, Sept. 27, 1999; 66 FR 45386, 45388, Aug. 28, 2001; 67 FR 51654, Aug. 6, 2002; 67 FR 61016, Sept. 27, 2002; 68 FR 57633, Oct. 6, 2003; 68 FR 75748, Dec. 31, 2003; 78 FR 60754, Oct. 2, 2013]

§ 178.65 Specification 39 non-reusable (non-refillable) cylinders.

(a) *Type, size, service pressure, and test pressure.* A DOT 39 cylinder is a seamless, welded, or brazed cylinder with a service pressure not to exceed 80 percent of the test pressure. Spherical pressure vessels are authorized and covered by references to cylinders in this specification.

(1) *Size limitation.* Maximum water capacity may not exceed: (i) 55 pounds (1,526 cubic inches) for a service pressure of 500 p.s.i.g. or less, and (ii) 10 pounds (277 cubic inches) for a service pressure in excess of 500 p.s.i.g.

(2) *Test pressure.* The minimum test pressure is the maximum pressure of contents at 130 °F or 180 p.s.i.g. whichever is greater.

(3) *Pressure of contents.* The term ''pressure of contents'' as used in this specification means the total pressure of all the materials to be shipped in the cylinder.

(b) *Material; steel or aluminum.* The cylinder must be constructed of either steel or aluminum conforming to the following requirements:

(1) *Steel.* (i) The steel analysis must conform to the following:

	Ladle analysis	Check analysis
Carbon, maximum percent	0.12	0.15
Phosphorus, maximum percent	.04	.05
Sulfur, maximum percent	.05	.06

(ii) For a cylinder made of seamless steel tubing with integrally formed ends, hot drawn, and finished, content percent for the following may not exceed: Carbon, 0.55; phosphorous, 0.045; sulfur, 0.050.

(iii) For non-heat treated welded steel cylinders, adequately killed deep drawing quality steel is required.

(iv) Longitudinal or helical welded cylinders are not authorized for service pressures in excess of 500 p.s.i.g.

(2) *Aluminum.* Aluminum is not authorized for service pressures in excess of 500 psig. The analysis of the aluminum must conform to the Aluminum Association standard for alloys 1060, 1100, 1170, 3003, 5052, 5086, 5154, 6061, and 6063, as specified in its publication entitled ''Aluminum Standards and Data'' (IBR, see §171.7 of this subchapter).

(3) Material with seams, cracks, laminations, or other injurious defects not permitted.

(4) Material used must be identified by any suitable method.

(c) *Manufacture.* (1) General manufacturing requirements are as follows:

(i) The surface finish must be uniform and reasonably smooth.

(ii) Inside surfaces must be clean, dry, and free of loose particles.

(iii) No defect of any kind is permitted if it is likely to weaken a finished cylinder.

(2) Requirements for seams:

(i) Brazing is not authorized on aluminum cylinders.

(ii) Brazing material must have a melting point of not lower than 1,000 °F.

(iii) Brazed seams must be assembled with proper fit to ensure complete penetration of the brazing material throughout the brazed joint.

(iv) Minimum width of brazed joints must be at least four times the thickness of the shell wall.

(v) Brazed seams must have design strength equal to or greater than 1.5 times the minimum strength of the shell wall.

(vi) Welded seams must be properly aligned and welded by a method that provides clean, uniform joints with adequate penetration.

(vii) Welded joints must have a strength equal to or greater than the minimum strength of the shell material in the finished cylinder.

(3) Attachments to the cylinder are permitted by any means which will not be detrimental to the integrity of the cylinder. Welding or brazing of attachments to the cylinder must be completed prior to all pressure tests.

(4) Welding procedures and operators must be qualified in accordance with CGA Pamphlet C–3 (IBR, see §171.7 of this subchapter).

(d) *Wall thickness.* The minimum wall thickness must be such that the wall stress at test pressure does not exceed the yield strength of the material of the finished cylinder wall. Calculations must be made by the following formulas:

(1) Calculation of the stress for cylinders must be made by the following formula:

$$S = [P(1.3D^2 + 0.4d^2)] / (D^2 - d^2)$$

Where:

S = Wall stress, in psi;
P = Test pressure in psig;
D = Outside diameter, in inches;
d = Inside diameter, in inches.

(2) Calculation of the stress for spheres must be made by the following formula:

$$S = PD / 4t$$

Where:

S = Wall stress, in psi;
P = Test pressure i psig;
D = Outside diameter, in inches;
t = Minimum wall thickness, in inches.

(e) *Openings and attachments.* Openings and attachments must conform to the following:

(1) Openings and attachments are permitted on heads only.

(2) All openings and their reinforcements must be within an imaginary circle, concentric to the axis of the cylinder. The diameter of the circle may not exceed 80 percent of the outside diameter of the cylinder. The plane of the circle must be parallel to the plane of a circumferential weld and normal to the long axis of the cylinder.

(3) Unless a head has adequate thickness, each opening must be reinforced by a securely attached fitting, boss, pad, collar, or other suitable means.

(4) Material used for welded openings and attachments must be of weldable

quality and compatible with the material of the cylinder.

(f) *Pressure tests.* (1) Each cylinder must be tested at an internal pressure of at least the test pressure and must be held at that pressure for at least 30 seconds.

(i) The leakage test must be conducted by submersion under water or by some other method that will be equally sensitive.

(ii) If the cylinder leaks, evidences visible distortion, or any other defect, while under test, it must be rejected (see paragraph (h) of this section).

(2) One cylinder taken from the beginning of each lot, and one from each 1,000 or less successively produced within the lot thereafter, must be hydrostatically tested to destruction. The entire lot must be rejected (see paragraph (h) of this section) if:

(i) A failure occurs at a gage pressure less than 2.0 times the test pressure;

(ii) A failure initiates in a braze or a weld or the heat affected zone thereof;

(iii) A failure is other than in the sidewall of a cylinder longitudinal with its long axis; or

(iv) In a sphere, a failure occurs in any opening, reinforcement, or at a point of attachment.

(3) A ''lot'' is defined as the quantity of cylinders successively produced per production shift (not exceeding 10 hours) having identical size, design, construction, material, heat treatment, finish, and quality.

(g) *Flattening test.* One cylinder must be taken from the beginning of production of each lot (as defined in paragraph (f)(3) of this section) and subjected to a flattening test as follows:

(1) The flattening test must be made on a cylinder that has been tested at test pressure.

(2) A ring taken from a cylinder may be flattened as an alternative to a test on a complete cylinder. The test ring may not include the heat affected zone or any weld. However, for a sphere, the test ring may include the circumferential weld if it is located at a 45 degree angle to the ring, ±5 degrees.

(3) The flattening must be between 60 degrees included-angle, wedge shaped knife edges, rounded to a 0.5 inch radius.

(4) Cylinders and test rings may not crack when flattened so that their outer surfaces are not more than six times wall thickness apart when made of steel or not more than ten times wall thickness apart when made of aluminum.

(5) If any cylinder or ring cracks when subjected to the specified flattening test, the lot of cylinders represented by the test must be rejected (see paragraph (h) of this section).

(h) *Rejected cylinders.* Rejected cylinders must conform to the following requirements:

(1) If the cause for rejection of a lot is determinable, and if by test or inspection defective cylinders are eliminated from the lot, the remaining cylinders must be qualified as a new lot under paragraphs (f) and (g) of this section.

(2) Repairs to welds are permitted. Following repair, a cylinder must pass the pressure test specified in paragraph (f) of this section.

(3) If a cylinder made from seamless steel tubing fails the flattening test described in paragraph (g) of this section, suitable uniform heat treatment must be used on each cylinder in the lot. All prescribed tests must be performed subsequent to this heat treatment.

(i) *Markings.* (1) The markings required by this section must be durable and waterproof. The requirements of §178.35(h) do not apply to this section.

(2) Required markings are as follows:

(i) DOT-39.

(ii) NRC.

(iii) The service pressure.

(iv) The test pressure.

(v) The registration number (M****) of the manufacturer.

(vi) The lot number.

(vii) The date of manufacture if the lot number does not establish the date of manufacture.

(viii) With one of the following statements:

(A) For cylinders manufactured prior to October 1, 1996: ''Federal law forbids transportation if refilled-penalty up to $25,000 fine and 5 years imprisonment (49 U.S.C. 1809)'' or ''Federal law forbids transportation if refilled-penalty up to $500,000 fine and 5 years imprisonment (49 U.S.C. 5124).''

(B) For cylinders manufactured on or after October 1, 1996: ''Federal law forbids transportation if refilled-penalty up to $500,000 fine and 5 years imprisonment (49 U.S.C. 5124).''

(3) The markings required by paragraphs (i)(2)(i) through (i)(2)(v) of this section must be in numbers and letters at least ⅛ inch high and displayed sequentially. For example:

DOT-39 NRC 250/500 M1001.

(4) No person may mark any cylinder with the specification identification ''DOT-39'' unless it was manufactured in compliance with the requirements of this section and its manufacturer has a registration number (M****) from the Associate Administrator.

[Amdt. 178–114, 61 FR 25942, May 23, 1996, as amended at 65 FR 58631, Sept. 29, 2000; 66 FR 45389, Aug. 28, 2001; 67 FR 51654, Aug. 8, 2002; 68 FR 75748, 75749, Dec. 31, 2003]

§ 178.68 Specification 4E welded aluminum cylinders.

(a) *Type, size and service pressure.* A DOT 4E cylinder is a welded aluminum cylinder with a water capacity (nominal) of not over 1,000 pounds and a service pressure of at least 225 to not over 500 psig. The cylinder must be constructed of not more than two seamless drawn shells with no more than one circumferential weld. The circumferential weld may not be closer to the point of tangency of the cylindrical portion with the shoulder than 20 times the cylinder wall thickness. Cylinders or shells closed in by spinning process and cylinders with longitudinal seams are not authorized.

(b) *Authorized material.* The cylinder must be constructed of aluminum of uniform quality. The following chemical analyses are authorized:

TABLE 1—AUTHORIZED MATERIALS

Designation	Chemical analysis—limits in percent 5154 [1]
Iron plus silicon	0.45 maximum.
Copper	0.10 maximum.
Manganese	0.10 maximum.
Magnesium	3.10/3.90.
Chromium	0.15/0.35.
Zinc	0.20 maximum.
Titanium	0.20 maximum.
Others, each	0.05 maximum.
Others, total	0.15 maximum.
Aluminum	remainder.

[1] Analysis must regularly be made only for the elements specifically mentioned in this table. If, however, the presence of other elements is indicated in the course of routine analysis, further analysis should be made to determine conformance with the limits specified for other elements.

(c) *Identification.* Material must be identified by any suitable method that will identify the alloy and manufacturer's lot number.

(d) *Manufacture.* Cylinders must be manufactured using equipment and processes adequate to ensure that each cylinder produced conforms to the requirements of this subpart. No defect is permitted that is likely to weaken the finished cylinder appreciably. A reasonably smooth and uniform surface finish is required. All welding must be by the gas shielded arc process.

(e) *Welding.* The attachment to the tops and bottoms only of cylinders by welding of neckrings or flanges, footrings, handles, bosses and pads and valve protection rings is authorized. However, such attachments and the portion of the cylinder to which it is attached must be made of weldable aluminum alloys.

(f) *Wall thickness.* The wall thickness of the cylinder must conform to the following:

(1) The minimum wall thickness of the cylinder must be 0.140 inch. In any case, the minimum wall thickness must be such that calculated wall stress at twice service pressure may not exceed the lesser value of either of the following:

(i) 20,000 psi.

(ii) One-half of the minimum tensile strength of the material as required in paragraph (j) of this section.

(2) Calculation must be made by the following formula:

$$S = [P(1.3D^2 + 0.4d^2)] / (D^2 - d^2)$$

Where:

S = wall stress in psi;

P = minimum test pressure prescribed for water jacket test;

D = outside diameter in inches;

d = inside diameter in inches.

(3) Minimum thickness of heads and bottoms may not be less than the minimum required thickness of the side wall.

(g) *Opening in cylinder.* Openings in cylinders must conform to the following:

(1) All openings must be in the heads or bases.

(2) Each opening in cylinders, except those for safety devices, must be provided with a fitting, boss, or pad, securely attached to cylinder by welding by inert gas shielded arc process or by threads. If threads are used, they must comply with the following:

(i) Threads must be clean-cut, even, without checks and cut to gauge.

(ii) Taper threads to be of length not less than as specified for American Standard taper pipe threads.

(iii) Straight threads, having at least 4 engaged threads, to have tight fit and calculated shear strength at least 10 times the test pressure of the cylinder; gaskets required, adequate to prevent leakage.

(3) Closure of a fitting, boss, or pad must be adequate to prevent leakage.

(h) *Hydrostatic test.* Each cylinder must successfully withstand a hydrostatic test, as follows:

(1) The test must be by water jacket, or other suitable method, operated so as to obtain accurate data. The pressure gauge must permit reading to an accuracy of 1 percent. The expansion gauge must permit a reading of the total expansion to an accuracy either of 1 percent or 0.1 cubic centimeter.

(2) Pressure of 2 times service pressure must be maintained for at least 30 seconds and sufficiently longer to insure complete expansion. Any internal pressure applied previous to the official test may not exceed 90 percent of the test pressure. If, due to failure of the test apparatus, the test pressure cannot be maintained, the test may be repeated at a pressure increased by 10 percent over the pressure otherwise specified.

(3) Permanent volumetric expansion may not exceed 12 percent of total volumetric expansion at test pressure.

(4) Cylinders having a calculated wall stress of 18,000 psi or less at test pressure may be tested as follows:

(i) At least one cylinder selected at random out of each lot of 200 or less must be tested in accordance with paragraphs (h)(1), (h)(2), and (h)(3) of this section.

(ii) All cylinders not tested as provided in paragraph (h)(4)(i) of this section must be examined under pressure of at least 2 times service pressure and show no defect.

(5) One finished cylinder selected at random out of each lot of 1,000 or less must be hydrostatically tested to 4 times the service pressure without bursting. Inability to meet this requirement must result in rejection of the lot.

(i) *Flattening test.* After hydrostatic testing, a flattening test is required on one section of a cylinder, taken at random out of each lot of 200 or less as follows:

(1) If the weld is not at midlength of the cylinder, the test section must be no less in width than 30 times the cylinder wall thickness. The weld must be in the center of the section. Weld reinforcement must be removed by machining or grinding so that the weld is flush with the exterior of the parent metal. There must be no evidence of cracking in the sample when it is flattened between flat plates to no more than 6 times the wall thickness.

(2) If the weld is at midlength of the cylinder, the test may be made as specified in paragraph (i)(1) of this section or must be made between wedge shaped knife edges (60° angle) rounded to a ½ inch radius. There must be no evidence of cracking in the sample when it is flattened to no more than 6 times the wall thickness.

(j) *Physical test.* A physical test must be conducted to determine yield strength, tensile strength, elongation, and reduction of area of material as follows:

(1) The test is required on 2 specimens cut from one cylinder or part thereof taken at random out of each lot of 200 or less.

(2) Specimens must conform to the following:

(i) A gauge length of 8 inches with a width not over 1½ inches, a gauge length of 2 inches with a width not over 1½ inches.

(ii) The specimen, exclusive of grip ends, may not be flattened. Grip ends may be flattened to within 1 inch of each end of the reduced section.

(iii) When size of cylinder does not permit securing straight specimens, the specimens may be taken in any location or direction and may be straightened or flattened cold, by pressure only, not by blows; when specimens are so taken and prepared, the inspector's report must show in connection with record of physical test detailed information in regard to such specimens.

(iv) Heating of a specimen for any purpose is not authorized.

(3) The yield strength in tension must be the stress corresponding to a permanent strain of 0.2 percent of the gauge length. The following conditions apply:

(i) The yield strength must be determined by the ''offset'' method as prescribed in ASTM E 8 (IBR, see § 171.7 of this subchapter).

(ii) Cross-head speed of the testing machine may not exceed ⅛ inch per minute during yield strength determination.

(k) *Acceptable results for physical tests.* An acceptable result of the physical test requires an elongation to at least 7 percent and yield strength not over 80 percent of tensile strength.

(l) *Weld tests.* Welds of the cylinder are required to successfully pass the following tests:

(1) *Reduced section tensile test.* A specimen must be cut from the cylinder used for the physical tests specified in paragraph (j) of this section. The specimen must be taken from across the seam, edges must be parallel for a distance of approximately 2 inches on either side of the weld. The specimen must be fractured in tension. The apparent breaking stress calculated on the minimum wall thickness must be at least equal to 2 times the stress calculated under paragraph (f)(2) of this section, and in addition must have an actual breaking stress of at least 30,000 psi. Should this specimen fail to meet the requirements, specimens may be taken from 2 additional cylinders from the same lot and tested. If either of the latter specimens fails to meet requirements, the entire lot represented must be rejected.

(2) *Guided bend test.* A bend test specimen must be cut from the cylinder used for the physical test specified in paragraph (j) of this section. Specimen must be taken across the seam, must be a minimum of 1½ inches wide, edges must be parallel and rounded with a file, and back-up strip, if used, must be removed by machining. The specimen shall be tested as follows:

(i) The specimen must be bent to refusal in the guided bend test jig as illustrated in paragraph 6.10 of CGA C–3 (IBR, see § 171.7 of this subchapter). The root of the weld (inside surface of the cylinder) must be located away from the ram of the jig. The specimen must not show a crack or other open defect exceeding ⅛ inch in any direction upon completion of the test. Should this specimen fail to meet the requirements, specimens may be taken from each of 2 additional cylinders from the same lot and tested. If either of the latter specimens fails to meet requirements, the entire lot represented must be rejected.

(ii) Alternatively, the specimen may be tested in a guided bend test jig as illustrated in Figure 12.1 of The Aluminum Association's 2002 publication, ''Welding Aluminum: Theory and Practice.'' The root of the weld (inside surface of the cylinder) must be located away from the mandrel of the jig. No specimen must show a crack or other open defect exceeding ⅛ inch in any direction upon completion of the test. Should this specimen fail to meet the requirements, specimens may be taken from each of 2 additional cylinders from the same lot and tested. If either of the latter specimens fails to meet requirements, the entire lot represented must be rejected.

(m) *Rejected cylinders.* Repair of welded seams is authorized. Acceptable cylinders must pass all prescribed tests.

(n) *Inspector's report.* In addition to the information required by § 178.35, the record of chemical analyses must also include applicable information on iron,

titanium, zinc, and magnesium used in the construction of the cylinder.

[Amdt. 178–114, 61 FR 25942, May 23, 1996, as amended at 62 FR 51561, Oct. 1, 1997; 66 FR 45386, Aug. 28, 2001; 67 FR 51654, Aug. 8, 2002; 68 FR 75748, Dec. 31, 2003; 69 FR 54046, Sept. 7, 2004; 74 FR 16143, Apr. 9, 2009]

§ 178.69 Responsibilities and requirements for manufacturers of UN pressure receptacles.

(a) Each manufacturer of a UN pressure receptacle marked with ''USA'' as a country of approval must comply with the requirements in this section. The manufacturer must maintain a quality system, obtain an approval for each initial pressure receptacle design type, and ensure that all production of UN pressure receptacles meets the applicable requirements.

(1) *Quality system.* The manufacturer of a UN pressure receptacle must have its quality system approved by the Associate Administrator. The quality system will initially be assessed through an audit by the Associate Administrator or his or her representative to determine whether it meets the requirements of this section. The Associate Administrator will notify the manufacturer in writing of the results of the audit. The notification will contain the conclusions of the audit and any corrective action required. The Associate Administrator may perform periodic audits to ensure that the manufacturer operates in accordance with the quality system. Reports of periodic audits will be provided to the manufacturer. The manufacturer must bear the cost of audits.

(2) *Quality system documentation.* The manufacturer must be able to demonstrate a documented quality system. Management must review the adequacy of the quality system to assure that it is effective and conforms to the requirements in § 178.70. The quality system records must be in English and must include detailed descriptions of the following:

(i) The organizational structure and responsibilities of personnel with regard to design and product quality;

(ii) The design control and design verification techniques, processes, and procedures used when designing the pressure receptacles;

(iii) The relevant procedures for pressure receptacle manufacturing, quality control, quality assurance, and process operation instructions;

(iv) Inspection and testing methodologies, measuring and testing equipment, and calibration data;

(v) The process for meeting customer requirements;

(vi) The process for document control and document revision;

(vii) The system for controlling nonconforming material and records, including procedures for identification, segregation, and disposition;

(viii) Production, processing and fabrication, including purchased components, in-process and final materials; and

(ix) Training programs for relevant personnel.

(3) *Maintenance of quality system.* The manufacturer must maintain the quality system as approved by the Associate Administrator. The manufacturer shall notify the Associate Administrator of any intended changes to the approved quality system prior to making the change. The Associate Administrator will evaluate the proposed change to determine whether the amended quality system will satisfy the requirements. The Associate Administrator will notify the manufacturer of the findings.

(b) *Design type approvals.* The manufacturer must have each pressure receptacle design type reviewed by an IIA and approved by the Associate Administrator in accordance with § 178.70. A cylinder is considered to be of a new design, compared with an existing approved design, as stated in the applicable ISO design, construction and testing standard.

(c) *Production inspection and certification.* The manufacturer must ensure that each UN pressure receptacle is inspected and certified in accordance with § 178.71.

[71 FR 33885, June 12, 2006]

§ 178.70 Approval of UN pressure receptacles.

(a) *Initial design-type approval.* The manufacturer of a UN pressure receptacle must obtain an initial design

type approval from the Associate Administrator. The initial design type approval must be of the pressure receptacle design as it is intended to be produced. The manufacturer must arrange for an IIA, approved by the Associate Administrator in accordance with subpart I of part 107 of this chapter, to perform a pre-audit of its pressure receptacle manufacturing operation prior to having an audit conducted by the Associate Administrator or his designee.

(b) *IIA pre-audit.* The manufacturer must submit an application for initial design type approval to the IIA for review. The IIA will examine the manufacturer's application for initial design type approval for completeness. An incomplete application will be returned to the manufacturer with an explanation. If an application is complete, the IIA will review all technical documentation, including drawings and calculations, to verify that the design meets all requirements of the applicable UN pressure receptacle standard and specification requirements. If the technical documentation shows that the pressure receptacle prototype design conforms to the applicable standards and requirements in §178.70, the manufacturer will fabricate a prototype lot of pressure receptacles in conformance with the technical documentation representative of the design. The IIA will verify that the prototype lot conforms to the applicable requirements by selecting pressure receptacles and witnessing their testing. After prototype testing has been satisfactorily completed, showing the pressure receptacles fully conform to all applicable specification requirements, the certifying IIA must prepare a letter of recommendation and a design type approval certificate. The design type approval certificate must contain the name and address of the manufacturer and the IIA certifying the design type, the test results, chemical analyses, lot identification, and all other supporting data specified in the applicable ISO design, construction and testing standard. The IIA must provide the certificate and documentation to the manufacturer.

(c) *Application for initial design type approval.* If the pre-audit is found satisfactory by the IIA, the manufacturer will submit the letter of recommendation from the IIA and an application for design type approval to the Associate Administrator. An application for initial design type approval must be submitted for each manufacturing facility. The application must be in English and, at a minimum, contain the following information:

(1) The name and address of the manufacturing facility. If the application is submitted by an authorized representative on behalf of the manufacturer, the application must include the representative's name and address.

(2) The name and title of the individual responsible for the manufacturer's quality system, as required by §178.69.

(3) The designation of the pressure receptacle and the relevant pressure receptacle standard.

(4) Details of any refusal of approval of a similar application by a designated approval agency of another country.

(5) The name and address of the production IIA that will perform the functions prescribed in paragraph (e) of this section. The IIA must be approved in writing by the Associate Administrator in accordance with subpart I of part 107 of this chapter.

(6) Documentation on the manufacturing facility as specified in §178.69.

(7) Design specifications and manufacturing drawings, showing components and subassemblies if relevant, design calculations, and material specifications necessary to verify compliance with the applicable pressure receptacle design standard.

(8) Manufacturing procedures and any applicable standards that describe in detail the manufacturing processes and control.

(9) Design type approval test reports detailing the results of examinations and tests conducted in accordance with the relevant pressure receptacle standard, to include any additional data, such as suitability for underwater applications or compatibility with hydrogen embrittlement gases.

(d) *Modification of approved pressure receptacle design type.* Modification of an approved UN pressure receptacle design type is not authorized without the

approval of the Associate Administrator. A manufacturer seeking modification of an approved UN pressure receptacle design type may be required to submit design qualification test data to the Associate Administrator before production. An audit may be required as part of the process to modify an approval.

(e) *Responsibilities of the production IIA*. The production IIA is responsible for ensuring that each pressure receptacle conforms to the design type approval. The production IIA must perform the following functions:

(1) Witness all inspections and tests specified in the UN pressure receptacle standard to ensure compliance with the standard and that the procedures adopted by the manufacturer meet the requirements of the standard;

(2) Verify that the production inspections were performed in accordance with this section;

(3) Select UN pressure receptacles from a prototype production lot and witness testing as required for the design type approval;

(4) Ensure that the various design type approval examinations and tests are performed accurately;

(5) Verify that each pressure receptacle is marked in accordance with the applicable requirements in §178.71; and

(6) Furnish complete test reports to the manufacturer and upon request to the purchaser. The test reports and certificate of compliance must be retained by the IIA for at least 20 years from the original test date of the pressure receptacles.

(f) *Production inspection audit and certification*. (1) If the application, design drawing and quality control documents are found satisfactory, PHMSA will schedule an on-site audit of the pressure receptacle manufacturer's quality system, manufacturing processes, inspections, and test procedures.

(2) During the audit, the manufacturer will be required to produce pressure receptacles to the technical standards for which approval is sought.

(3) The production IIA must witness the required inspections and verifications on the pressure receptacles during the production run. The IIA selected by the manufacturer for production inspection and testing may be different from the IIA who performed the design type approval verifications.

(4) If the procedures and controls are deemed acceptable, test sample pressure receptacles will be selected at random from the production lot and sent to a laboratory designated by the Associate Administrator for verification testing.

(5) If the pressure receptacle test samples are found to conform to all the applicable requirements, the Associate Administrator will issue approvals to the manufacturer and the production IIA to authorize the manufacture of the pressure receptacles. The approved design type approval certificate will be returned to the manufacturer.

(6) Upon the receipt of the approved design type approval certificate from the Associate Administrator, the pressure receptacle manufacturer must sign the certificate.

(g) *Recordkeeping*. The production IIA and the manufacturer must retain a copy of the design type approval certificate and certificate of compliance records for at least 20 years.

(h) *Denial of design type application*. If the design type application is denied, the Associate Administrator will notify the applicant in writing and provide the reason for the denial. The manufacturer may request that the Associate Administrator reconsider the decision. The application request must—

(1) Be written in English and filed within 60 days of receipt of the decision;

(2) State in detail any alleged errors of fact and law; and

(3) Enclose any additional information needed to support the request to reconsider.

(i) *Appeal*. (1) A manufacturer whose reconsideration request is denied may appeal to the PHMSA Administrator. The appeal must—

(i) Be written in English and filed within 60 days of receipt of the Associate Administrator's decision on reconsideration;

(ii) State in detail any alleged errors of fact and law;

(iii) Enclose any additional information needed to support the appeal; and

(iv) State in detail the modification of the final decision sought.

(2) The PHMSA Administrator will grant or deny the relief and inform the appellant in writing of the decision. PHMSA Administrator's decision is the final administrative action.

(j) *Termination of a design type approval certificate.* (1) The Associate Administrator may terminate an approval certificate issue under this section if it is determined that, because of a change in circumstances, the approval no longer is needed or no longer would be granted if applied for; information upon which the approval was based is fraudulent or substantially erroneous; or termination of the approval is necessary to adequately protect against risks to life and property.

(2) Before an approval is terminated, the Associate Administrator will provide the manufacturer and the approval agency—

(i) Written notice of the facts or conduct believed to warrant the withdrawal;

(ii) Opportunity to submit oral and written evidence, and

(iii) Opportunity to demonstrate or achieve compliance with the application requirement.

(3) If the Associate Administrator determines that a certificate of approval must be withdrawn to preclude a significant and imminent adverse affect on public safety, the procedures in paragraph (j)(2)(ii) and (iii) of this section need not be provided prior to withdrawal of the approval, but shall be provided as soon as practicable thereafter.

[71 FR 33886, June 12, 2006, as amended at 71 FR 54397, Sept. 14, 2006; 77 FR 60943, Oct. 5, 2012]

§ 178.71 Specifications for UN pressure receptacles.

(a) *General.* Each UN pressure receptacle must meet the requirements of this section. Requirements for approval, qualification, maintenance, and testing are contained in § 178.70, and subpart C of part 180 of this subchapter.

(b) *Definitions.* The following definitions apply for the purposes of design and construction of UN pressure receptacles under this subpart:

Alternative arrangement means an approval granted by the Associate Administrator for a MEGC that has been designed, constructed or tested to the technical requirements or testing methods other than those specified for UN pressure receptacles in part 178 or part 180 of this subchapter.

Bundle of cylinders. See § 171.8 of this subchapter.

Design type means a pressure receptacle design as specified by a particular pressure receptacle standard.

Design type approval means an overall approval of the manufacturer's quality system and design type of each pressure receptacle to be produced within the manufacturer's facility.

UN tube. See § 171.8 of this subchapter.

(c) Following the final heat treatment, all cylinders, except those selected for batch testing must be subjected to a proof pressure or a hydraulic volumetric expansion test.

(d) *Service equipment.* (1) Except for pressure relief devices, UN pressure receptacle equipment, including valves, piping, fittings, and other equipment subjected to pressure must be designed and constructed to withstand at least 1.5 times the test pressure of the pressure receptacle.

(2) Service equipment must be configured or designed to prevent damage that could result in the release of the pressure receptacle contents during normal conditions of handling and transport. Manifold piping leading to shut-off valves must be sufficiently flexible to protect the valves and the piping from shearing or releasing the pressure receptacle contents. The filling and discharge valves and any protective caps must be secured against unintended opening. The valves must conform to ISO 10297 (IBR, *see* § 171.7 of this subchapter), or ISO 13340 (IBR, *see* § 171.7 of this subchapter) for non-refillable pressure receptacles, and be protected as specified in § 173.301b(f) of this subchapter.

(3) UN pressure receptacles that cannot be handled manually or rolled, must be equipped with devices (*e.g.*, skids, rings, straps) ensuring that they can be safely handled by mechanical means and so arranged as not to impair the strength of, nor cause undue stresses, in the pressure receptacle.

(4) Pressure receptacles filled by volume must be equipped with a level indicator.

(e) *Bundles of cylinders.* UN pressure receptacles assembled in bundles must be structurally supported and held together as a unit and secured in a manner that prevents movement in relation to the structural assembly and movement that would result in the concentration of harmful local stresses. The frame design must ensure stability under normal operating conditions.

(1) The frame must securely retain all the components of the bundle and must protect them from damage during conditions normally incident to transportation. The method of cylinder restraint must prevent any vertical or horizontal movement or rotation of the cylinder that could cause undue strain on the manifold. The total assembly must be able to withstand rough handling, including being dropped or overturned.

(2) The frame must include features designed for the handling and transportation of the bundle. The lifting rings must be designed to withstand a design load of 2 times the maximum gross weight. Bundles with more than one lifting ring must be designed such that a minimum sling angle of 45 degrees to the horizontal can be achieved during lifting using the lifting rings. If four lifting rings are used, their design must be strong enough to allow the bundle to be lifted by two rings. Where two or four lifting rings are used, diametrically opposite lifting rings must be aligned with each other to allow for correct lifting using shackle pins. If the bundle is filled with forklift pockets, it must contain two forklift pockets on each side from which it is to be lifted. The forklift pockets must be positioned symmetrically consistent with the bundle center of gravity.

(3) The frame structural members must be designed for a vertical load of 2 times the maximum gross weight of the bundle. Design stress levels may not exceed 0.9 times the yield strength of the material.

(4) The frame must not contain any protrusions from the exterior frame structure that could cause a hazardous condition.

(5) The frame design must prevent collection of water or other debris that would increase the tare weight of bundles filled by weight.

(6) The floor of the bundle frame must not buckle during normal operating conditions and must allow for the drainage of water and debris from around the base of the cylinders.

(7) If the frame design includes movable doors or covers, they must be capable of being secured with latches or other means that will not become dislodged by operational impact loads. Valves that need to be operated in normal service or in an emergency must be accessible.

(8) For bundles of cylinders, pressure receptacle marking requirements only apply to the individual cylinders of a bundle and not to any assembly structure.

(f) *Design and construction requirements for UN refillable welded cylinders.* In addition to the general requirements of this section, UN refillable welded cylinders must conform to the following ISO standards, as applicable:

(1) ISO 4706: Gas cylinders—Refillable welded steel cylinders—Test pressure 60 bar and below (IBR, *see* §171.7 of this subchapter).

(2) ISO 18172–1: Gas cylinders—Refillable welded stainless steel cylinders—Part 1: Test pressure 6 MPa and below (IBR, *see* §171.7 of this subchapter).

(3) ISO 20703: Gas cylinders—Refillable welded aluminum-alloy cylinders—Design, construction and testing (IBR, *see* §171.7 of this subchapter).

(g) *Design and construction requirements for UN refillable seamless steel cylinders.* In addition to the general requirements of this section, UN refillable seamless steel cylinders must conform to the following ISO standards, as applicable:

(1) ISO 9809–1: Gas cylinders—Refillable seamless steel gas cylinders—Design, construction and testing—Part 1: Quenched and tempered steel cylinders with tensile strength less than 1100 MPa. (IBR, see §171.7 of this subchapter).

(2) ISO 9809–2: Gas cylinders—Refillable seamless steel gas cylinders—Design, construction and testing—Part 2: Quenched and tempered steel cylinders with tensile strength greater than or

equal to 1100 MPa. (IBR, see § 171.7 of this subchapter).

(3) ISO 9809–3: Gas cylinders—Refillable seamless steel gas cylinders—Design, construction and testing—Part 3: Normalized steel cylinders. (IBR, *see* § 171.7 of this subchapter).

(h) *Design and construction requirements for UN refillable seamless aluminum alloy cylinders.* In addition to the general requirements of this section, UN refillable seamless aluminum cylinders must conform to ISO 7866: Gas cylinders—Refillable seamless aluminum alloy gas cylinders—Design, construction and testing. (IBR, *see* § 171.7 of this subchapter). The use of Aluminum alloy 6351–T6 or equivalent is prohibited.

(i) *Design and construction requirements for UN non-refillable metal cylinders.* In addition to the general requirements of this section, UN non-refillable metal cylinders must conform to ISO 11118: Gas cylinders—Non-refillable metallic gas cylinders—Specification and test methods. (IBR, *see* § 171.7 of this subchapter.)

(j) *Design and construction requirements for UN refillable seamless steel tubes.* In addition to the general requirements of this section, UN refillable seamless steel tubes must conform to ISO 11120: Gas cylinders—Refillable seamless steel tubes of water capacity between 150 L and 3000 L—Design, construction and testing. (IBR, *see* § 171.7 of this subchapter).

(k) *Design and construction requirements for UN acetylene cylinders.* In addition to the general requirements of this section, UN acetylene cylinders must conform to the following ISO standards, as applicable:

(1) For the cylinder shell:

(i) ISO 9809–1: Gas cylinders—Refillable seamless steel gas cylinders—Design, construction and testing—Part 1: Quenched and tempered steel cylinders with tensile strength less than 1100 MPa.

(ii) ISO 9809–3: Gas cylinders—Refillable seamless steel gas cylinders—Design, construction and testing—Part 3: Normalized steel cylinders.

(2) The porous mass in an acetylene cylinder must conform to ISO 3807–2: Cylinders for acetylene—Basic requirements—Part 2: Cylinders with fusible plugs. (IBR, *see* § 171.7 of this subchapter).

(l) *Design and construction requirements for UN composite cylinders.* (1) In addition to the general requirements of this section, UN composite cylinders must be designed for unlimited service life and conform to the following ISO standards, as applicable:

(i) ISO 11119–1: Gas cylinders of composite construction—Specification and test methods—Part 1: Hoop-wrapped composite gas cylinders. (IBR, *see* § 171.7 of this subchapter).

(ii) ISO 11119–2: Gas cylinders of composite construction—Specification and test methods—Part 2: Fully-wrapped fibre reinforced composite gas cylinders with load-sharing metal liners. (IBR, *see* § 171.7 of this subchapter).

(iii) ISO 11119–3: Gas cylinders of composite construction—Specification and test methods—Part 3: Fully wrapped fibre reinforced composite gas cylinders with non-load sharing metallic or non-metallic liners. (IBR, *see* § 171.7 of this subchapter).

(2) ISO 11119–2 and ISO 11119–3 gas cylinders of composite construction manufactured in accordance with the requirements for underwater use must bear the ''UW'' mark.

(m) *Design and construction requirements for UN metal hydride storage systems.* In addition to the general requirements of this section, metal hydride storage systems must conform to the following ISO standards, as applicable: ISO 16111: Transportable gas storage devices—Hydrogen absorbed in reversible metal hydride (IBR, *see* § 171.7 of this subchapter).

(n) *Material compatibility.* In addition to the material requirements specified in the UN pressure receptacle design and construction ISO standards, and any restrictions specified in part 173 for the gases to be transported, the requirements of the following standards must be applied with respect to material compatibility:

(1) ISO 11114–1: Transportable gas cylinders—Compatibility of cylinder and valve materials with gas contents—Part 1: Metallic materials. (IBR, *see* § 171.7 of this subchapter).

(2) ISO 11114–2: Transportable gas cylinders—Compatibility of cylinder and valve materials with gas contents—

Part 2: Non-metallic materials. (IBR, *see* § 171.7 of this subchapter).

(o) *Protection of closures.* Closures and their protection must conform to the requirements in § 173.301(f) of this subchapter.

(p) *Marking of UN refillable pressure receptacles.* UN refillable pressure receptacles must be marked clearly and legibly. The required markings must be permanently affixed by stamping, engraving, or other equivalent method, on the shoulder, top end or neck of the pressure receptacle or on a permanently affixed component of the pressure receptacle, such as a welded collar. Except for the ''UN'' mark, the minimum size of the marks must be 5 mm for pressure receptacles with a diameter greater than or equal to 140 mm, and 2.5 mm for pressure receptacles with a diameter less than 140 mm. The minimum size of the ''UN'' mark must be 5 mm for pressure receptacles with a diameter less than 140 mm, and 10 mm for pressure receptacles with a diameter of greater than or equal to 140 mm. The depth of the markings must not create harmful stress concentrations. A refillable pressure receptacle conforming to the UN standard must be marked as follows:

(1) The UN packaging symbol.

(2) The ISO standard, for example ISO 9809–1, used for design, construction and testing. Acetylene cylinders must be marked to indicate the porous mass and the steel shell, for example: ''ISO 3807–2/ISO 9809–1.''

(3) The mark of the country where the approval is granted. The letters ''USA'' must be marked on UN pressure receptacles approved by the United States. The manufacturer must obtain an approval number from the Associate Administrator. The manufacturer approval number must follow the country of approval mark, separated by a slash (for example, USA/MXXXX). Pressure receptacles approved by more than one national authority may contain the mark of each country of approval, separated by a comma.

(4) The identity mark or stamp of the IIA.

(5) The date of the initial inspection, the year (four digits) followed by the month (two digits) separated by a slash, for example ''2006/04''.

(6) The test pressure in bar, preceded by the letters ''PH'' and followed by the letters ''BAR''.

(7) The rated charging pressure of the metal hydride storage system in bar, preceded by the letters ''RCP'' and followed by the letters ''BAR.''

(8) The empty or tare weight. Except for acetylene cylinders, empty weight is the mass of the pressure receptacle in kilograms, including all integral parts (*e.g.*, collar, neck ring, foot ring, *etc.*), followed by the letters ''KG''. The empty weight does not include the mass of the valve, valve cap or valve guard or any coating. The empty weight must be expressed to three significant figures rounded up to the last digit. For cylinders of less than 1 kg, the empty weight must be expressed to two significant figures rounded down to the last digit. For acetylene cylinders, the tare weight must be marked on the cylinders in kilograms. The tare weight is the sum of the empty weight, mass of the valve, any coating and all

permanently attached parts (*e.g.*, fittings and accessories) that are not removed during filling. The tare weight must be expressed to two significant figures rounded down to the last digit. The tare weight does not include the cylinder cap or any outlet cap or plug not permanently attached to the cylinder.

(9) The minimum wall thickness of the pressure receptacle in millimeters followed by the letters ''MM''. This mark is not required for pressure receptacles with a water capacity less than or equal to 1.0 L or for composite cylinders.

(10) For pressure receptacles intended for the transport of compressed gases and UN 1001 acetylene, dissolved, the working pressure in bar, proceeded by the letters ''PW''.

(11) For liquefied gases, the water capacity in liters expressed to three significant digits rounded down to the last digit, followed by the letter ''L''. If the value of the minimum or nominal water capacity is an integer, the digits after the decimal point may be omitted.

(12) Identification of the cylinder thread type (*e.g.*, 25E).

(13) The country of manufacture. The letters ''USA'' must be marked on cylinders manufactured in the United States.

(14) The serial number assigned by the manufacturer.

(15) For steel pressure receptacles, the letter ''H'' showing compatibility of the steel, as specified in 1SO 11114–1.

(16) Identification of aluminum alloy, if applicable.

(17) Stamp for nondestructive testing, if applicable.

(18) Stamp for underwater use of composite cylinders, if applicable.

(19) For metal hydride storage systems having a limited life, the date of expiration indicated by the word ''FINAL,'' followed by the year (four digits), the month (two digits) and separated by a slash.

(q) *Marking sequence*. The marking required by paragraph (p) of this section must be placed in three groups as shown in the example below:

(1) The top grouping contains manufacturing marks and must appear consecutively in the sequence given in paragraphs (p)(13) through (19) of this section.

(2) The middle grouping contains operational marks described in paragraphs (p)(6) through (11) of this section.

(3) The bottom grouping contains certification marks and must appear consecutively in the sequence given in paragraphs (p)(1) through (5) of this section.

1. Draft TSD Is Seriously Dated and the Updates Made Are Inadequate

Although a real effort has been made to introduce references to more recent CCSP reports, the draft endangerment TSD is largely a dated document which relies primarily on the *Fourth Assessment Report* (AR4) of the U.N.'s Intergovernmental Panel on Climate Change (IPCC). A lot has happened in those intervening three years since the input deadline for *AR4*. The IPCC's *AR4* was published in the spring of 2007, but to meet the deadline for inclusion in the *AR4*, scientific papers had to be accepted for publication by early 2006. Given the lag between submission and acceptance the real cut-off for new research was even earlier. So, in the rapidly evolving field of climate change, by grounding its TSD in the IPCC *AR4* the EPA is largely relying on scientific findings that are, by early 2009, largely 3 years or more out of date. The six developments described here, which to our knowledge are not described in the Draft TSD should in our view significantly influence any assessment of "vulnerability, risk, and impacts" of climate change within the U.S. Therefore, the extensive portions of the EPA's Endangerment TSD which are based upon the old science are no longer appropriate and need to be further revised.

1.1 Where to Find a Discussion of Various Topics in These Comments

Section 1 summarizes six of the many important new developments since the cut-off date for the IPCC AR4 report that need to be reflected in the Draft TSD but to our knowledge have not been. These developments primarily affect Section 5 of the Draft TSD as well as the Executive Summary. Section 2 of these comments summarizes some of the critical inconsistencies between the Draft TSD (primarily again Section 5) and data concerning the causes of global warming. Section 3 summarizes data showing continuing increases in US health and welfare during a period of continuing increases in GHG levels. Finally, Section 4 presents detailed comments on specific sections of the Draft TSD, which are related back to the earlier sections so as to avoid repeated presentation of the same material.

(r) *Other markings.* Other markings are allowed in areas other than the side wall, provided they are made in low stress areas and are not of a size and depth that will create harmful stress concentrations. Such marks must not conflict with required marks.

(s) *Marking of UN non-refillable pressure receptacles.* Unless otherwise specified in this paragraph, each UN non-refillable pressure receptacle must be clearly and legibly marked as prescribed in paragraph (p) of this section. In addition, permanent stenciling is authorized. Except when stenciled, the marks must be on the shoulder, top end or neck of the pressure receptacle or on a permanently affixed component of the pressure receptacle (*e.g.*, a welded collar).

(1) The marking requirements and sequence listed in paragraphs (p)(1) through (19) of this section are required, except the markings in paragraphs (p)(8), (9), (12) and (18) are not applicable. The required serial number marking in paragraph (p)(14) may be replaced by the batch number.

(2) Each receptacle must be marked with the words ''DO NOT REFILL'' in letters of at least 5 mm in height.

(3) A non-refillable pressure receptacle, because of its size, may substitute the marking required by this paragraph with a label. Reduction in marking size is authorized only as prescribed in ISO 7225, Gas cylinders—Precautionary labels. (IBR, *see* § 171.7 of this subchapter).

(4) Each non-refillable pressure receptacle must also be legibly marked by stenciling the following statement: ''Federal law forbids transportation if refilled-penalty up to $500,000 fine and 5 years in imprisonment (49 U.S.C. 5124).''

(5) No person may mark a non-refillable pressure receptacle as meeting the requirements of this section unless it was manufactured in conformance with this section.

[76 FR 3385, Jan. 19, 2011, as amended at 76 FR 43532, July 20, 2011; 77 FR 60943, Oct. 5, 2012; 78 FR 1096, Jan. 7, 2013]

§ 178.74 Approval of MEGCs.

(a) *Application for design type approval.* (1) Each new MEGC design type must have a design approval certificate. An owner or manufacturer must apply to an approval agency that is approved by the Associate Administrator in accordance with subpart E of part 107 of this chapter +to obtain approval of a new design. When a series of MEGCs is manufactured without change in the design, the certificate is valid for the entire series. The design approval certificate must refer to the prototype test report, the materials of construction of the manifold, the standards to which the pressure receptacles are made and an approval number. The compliance requirements or test methods applicable to MEGCs as specified in this subpart may be varied when the level of safety is determined to be equivalent to or exceed the requirements of this subchapter and is approved in writing by the Associate Administrator. A design approval may serve for the approval of smaller MEGCs made of materials of the same type and thickness, by the same fabrication techniques and with identical supports, equivalent closures and other appurtenances.

(2) Each application for design approval must be in English and contain the following information:

(i) Two complete copies of all engineering drawings, calculations, and test data necessary to ensure that the design meets the relevant specification.

(ii) The manufacturer's serial number that will be assigned to each MEGC.

(iii) A statement as to whether the design type has been examined by any approval agency previously and judged unacceptable. Affirmative statements must be documented with the name of the approval agency, reason for non-acceptance, and the nature of modifications made to the design type.

(b) *Actions by the approval agency.* The approval agency must review the application for design type approval, including all drawings and calculations, to ensure that the design of the MEGC meets all requirements of the relevant specification and to determine whether it is complete and conforms to the requirements of this section. An incomplete application will be returned to the applicant with the reasons why the application was returned. If the application is complete and all applicable requirements of this section are met, the approval agency must prepare a MEGC design approval certificate containing the manufacturer's name and address, results and conclusions of the examination and necessary data for identification of the design type. If the

Associate Administrator approves the Design Type Approval Certificate application, the approval agency and the manufacturer must each maintain a copy of the approved drawings, calculations, and test data for at least 20 years.

(c) *Approval agency's responsibilities.* The approval agency is responsible for ensuring that the MEGC conforms to the design type approval. The approval agency must:

(1) Witness all tests required for the approval of the MEGC specified in this section and § 178.75.

(2) Ensure, through appropriate inspection, that each MEGC is fabricated in all respects in conformance with the approved drawings, calculations, and test data.

(3) Determine and ensure that the MEGC is suitable for its intended use and that it conforms to the requirements of this subchapter.

(4) Apply its name, identifying mark or identifying number, and the date the approval was issued, to the metal identification marking plate attached to the MEGC upon successful completion of all requirements of this subpart. Any approvals by the Associate Administrator authorizing design or construction alternatives (Alternate Arrangements) of the MEGC (see paragraph (a) of this section) must be indicated on the metal identification plate as specified in § 178.75(j).

(5) Prepare an approval certificate for each MEGC or, in the case of a series of identical MEGCs manufactured to a single design type, for each series of MEGCs. The approval certificate must include all of the following information:

(i) The information displayed on the metal identification plate required by § 178.75(j);

(ii) The results of the applicable framework test specified in ISO 1496–3 (IBR, see § 171.7 of this subchapter);

(iii) The results of the initial inspection and test specified in paragraph (h) of this section;

(iv) The results of the impact test specified in § 178.75(i)(4);

(v) Certification documents verifying that the cylinders and tubes conform to the applicable standards; and

(vi) A statement that the approval agency certifies the MEGC in accordance with the procedures in this section and that the MEGC is suitable for its intended purpose and meets the requirements of this subchapter. When a series of MEGCs is manufactured without change in the design type, the certificate may be valid for the entire series of MEGCs representing a single design type. The approval number must consist of the distinguishing sign or mark of the country (''USA'' for the United States of America) where the approval was granted and a registration number.

(6) Retain on file a copy of each approval certificate for at least 20 years.

(d) *Manufacturers' responsibilities.* The manufacturer is responsible for compliance with the applicable specifications for the design and construction of MEGCs. The manufacturer of a MEGC must:

(1) Comply with all the requirements of the applicable ISO standard specified in § 178.71;

(2) Obtain and use an approval agency to review the design, construction and certification of the MEGC;

(3) Provide a statement in the manufacturers' data report certifying that each MEGC manufactured complies with the relevant specification and all the applicable requirements of this subchapter; and

(4) Retain records for the MEGCs for at least 20 years. When required by the specification, the manufacturer must provide copies of the records to the approval agency, the owner or lessee of the MEGC, and to a representative of DOT, upon request.

(e) *Denial of application for approval.* If the Associate Administrator finds that the MEGC will not be approved for any reason, the Associate Administrator will notify the applicant in writing and provide the reason for the denial. The manufacturer may request that the Associate Administrator reconsider the decision. The application request must—

(1) Be written in English and filed within 90 days of receipt of the decision;

(2) State in detail any alleged errors of fact and law; and

(3) Enclose any additional information needed to support the request to reconsider.

(f) *Appeal.* (1) A manufacturer whose reconsideration request is denied may appeal to the PHMSA Administrator. The appeal must—

(i) Be in writing and filed within 90 days of receipt of the Associate Administrator s decision on reconsideration;

(ii) State in detail any alleged errors of fact and law;

(iii) Enclose any additional information needed to support the appeal; and

(iv) State in detail the modification of the final decision sought.

(2) The Administrator will grant or deny the relief and inform the appellant in writing of the decision. The Administrator's decision is the final administrative action.

(g) *Modifications to approved MEGCs.* (1) Prior to modification of any approved MEGC that may affect conformance and safe use, and that may involve a change to the design type or affect its ability to retain the hazardous material in transportation, the MEGC's owner must inform the approval agency that prepared the initial approval certificate for the MEGC or, if the initial approval agency is unavailable, another approval agency, of the nature of the modification and request certification of the modification. The owner must supply the approval agency with all revised drawings, calculations, and test data relative to the intended modification. The MEGC's owner must also provide a statement as to whether the intended modification has been examined and determined to be unacceptable by any approval agency. The written statement must include the name of the approval agency, the reason for non-acceptance, and the nature of changes made to the modification since its original rejection.

(2) The approval agency must review the request for modification. If the approval agency determines that the proposed modification does not conform to the relevant specification, the approval agency must reject the request in accordance with paragraph (d) of this section. If the approval agency determines that the proposed modification conforms fully with the relevant specification, the request is accepted. If modification to an approved MEGC alters any information on the approval certificate, the approval agency must prepare a new approval certificate for the modified MEGC and submit the certificate to the Associate Administrator for approval. After receiving approval from the Associate Administrator, the approval agency must ensure that any necessary changes are made to the metal identification plate. A copy of each newly issued approval certificate must be retained by the approval agency and the MEGC's owner for at least 20 years. The approval agency must perform the following activities:

(i) Retain a set of the approved revised drawings, calculations, and data as specified in §178.69(b)(4) for at least 20 years;

(ii) Ensure through appropriate inspection that all modifications conform to the revised drawings, calculations, and test data; and

(iii) Determine the extent to which retesting of the modified MEGC is necessary based on the nature of the proposed modification, and ensure that all required retests are satisfactorily performed.

(h) *Termination of Approval Certificate.* (1) The Associate Administrator may terminate an approval issued under this section if he or she determines that—

(i) Because of a change in circumstances, the approval no longer is needed or no longer would be granted if applied for;

(ii) Information upon which the approval was based is fraudulent or substantially erroneous;

(iii) Termination of the approval is necessary to adequately protect against risks to life and property; or

(iv) The MEGC does not meet the specification.

(2) Before an approval is terminated, the Associate Administrator will provide the person—

(i) Written notice of the facts or conduct believed to warrant the termination;

(ii) An opportunity to submit oral and written evidence; and

(3) An opportunity to demonstrate or achieve compliance with the applicable requirements.

(i) *Imminent Danger*. If the Associate Administrator determines that a certificate of approval must be terminated to preclude a significant and imminent adverse effect on public safety, the Associate Administrator may terminate the certificate immediately. In such circumstances, the opportunities of paragraphs (h)(2) and (3) of this section need not be provided prior to termination of the approval, but must be provided as soon as practicable thereafter.

[71 FR 33890, June 12, 2006]

§ 178.75 Specifications for MEGCs.

(a) *General*. Each MEGC must meet the requirements of this section. In a MEGC that meets the definition of a ''container'' within the terms of the International Convention for Safe Containers (CSC) must meet the requirements of the CSC as amended and 49 CFR parts 450 through 453, and must have a CSC approval plate.

(b) *Alternate Arrangements*. The technical requirements applicable to MEGCs may be varied when the level of safety is determined to be equivalent to or exceed the requirements of this subchapter. Such an alternate arrangement must be approved in writing by the Associate Administrator. MEGCs approved to an Alternate Arrangement must be marked as required by paragraph (j) of this section.

(c) *Definitions*. The following definitions apply:

Leakproofness test means a test using gas subjecting the pressure receptacles and the service equipment of the MEGC to an effective internal pressure of not less than 20% of the test pressure.

Manifold means an assembly of piping and valves connecting the filling and/or discharge openings of the pressure receptacles.

Maximum permissible gross mass or MPGM means the heaviest load authorized for transport (sum of the tare mass of the MEGC, service equipment and pressure receptacle).

Service equipment means manifold system (measuring instruments, piping and safety devices).

Shut-off valve means a valve that stops the flow of gas.

Structural equipment means the reinforcing, fastening, protective and stabilizing members external to the pressure receptacles.

(d) *General design and construction requirements*. (1) The MEGC must be capable of being loaded and discharged without the removal of its structural equipment. It must possess stabilizing members external to the pressure receptacles to provide structural integrity for handling and transport. MEGCs must be designed and constructed with supports to provide a secure base during transport and with lifting and tiedown attachments that are adequate for lifting the MEGC including when loaded to its maximum permissible gross mass. The MEGC must be designed to be loaded onto a transport vehicle or vessel and equipped with skids, mountings or accessories to facilitate mechanical handling.

(2) MEGCs must be designed, manufactured and equipped to withstand, without loss of contents, all normal handling and transportation conditions. The design must take into account the effects of dynamic loading and fatigue.

(3) Each pressure receptacle of a MEGC must be of the same design type, seamless steel, and constructed and tested according to one of the following ISO standards:

(i) ISO 9809–1: Gas cylinders—Refillable seamless steel gas cylinders—Design, construction and testing—Part 1: Quenched and tempered steel cylinders with tensile strength less than 1100 MPa. (IBR, see §171.7 of this subchapter);

(ii) ISO 9809–2: Gas cylinders—Refillable seamless steel gas cylinders—Design, construction and testing—Part 2: Quenched and tempered steel cylinders with tensile strength greater than or equal to 1100 MPa. (IBR, see §171.7 of this subchapter);

(iii) ISO 9809–3: Gas cylinders—Refillable seamless steel gas cylinders—Design, construction and testing—Part 3: Normalized steel cylinders. (IBR, see §171.7 of this subchapter); or

(iv) ISO 11120: Gas cylinders—Refillable seamless steel tubes of water capacity between 150 L and 3000 L—Design, construction and testing. (IBR, see §171.7 of this subchapter).

(4) Pressure receptacles of MEGCs, fittings, and pipework must be constructed of a material that is compatible with the hazardous materials intended to be transported, as specified in this subchapter.

(5) Contact between dissimilar metals that could result in damage by galvanic action must be prevented by appropriate means.

(6) The materials of the MEGC, including any devices, gaskets, and accessories, must have no adverse effect on the gases intended for transport in the MEGC.

(7) MEGCs must be designed to withstand, without loss of contents, at least the internal pressure due to the contents, and the static, dynamic and thermal loads during normal conditions of handling and transport. The design must take into account the effects of fatigue, caused by repeated application of these loads through the expected life of the MEGC.

(8) MEGCs and their fastenings must, under the maximum permissible load, be capable of withstanding the following separately applied static forces (for calculation purposes, acceleration due to gravity (g) = 9.81 m/s^2):

(i) In the direction of travel: 2g (twice the MPGM multiplied by the acceleration due to gravity);

(ii) Horizontally at right angles to the direction of travel: 1g (the MPGM multiplied by the acceleration due to gravity. When the direction of travel is not clearly determined, the forces must be equal to twice the MPGM);

(iii) Vertically upwards: 1g (the MPGM multiplied by the acceleration due to gravity); and

(iv) Vertically downwards: 2g (twice the MPGM (total loading including the effect of gravity) multiplied by the acceleration due to gravity.

(9) Under each of the forces specified in paragraph (d)(8) of this section, the stress at the most severely stressed point of the pressure receptacles must not exceed the values given in the applicable design specifications (*e.g.*, ISO 11120).

(10) Under each of the forces specified in paragraph (d)(8) of this section, the safety factor for the framework and fastenings must be as follows:

(i) For steels having a clearly defined yield point, a safety factor of 1.5 in relation to the guaranteed yield strength; or

(ii) For steels with no clearly defined yield point, a safety factor of 1.5 in relation to the guaranteed 0.2 percent proof strength and, for austenitic steels, the 1 percent proof strength.

(11) MEGCs must be capable of being electrically grounded to prevent electrostatic discharge when intended for flammable gases.

(12) The pressure receptacles of a MEGC must be secured in a manner to prevent movement that could result in damage to the structure and concentration of harmful localized stresses.

(e) *Service equipment.* (1) Service equipment must be arranged so that it is protected from mechanical damage by external forces during handling and transportation. When the connections between the frame and the pressure receptacles allow relative movement between the subassemblies, the equipment must be fastened to allow movement to prevent damage to any working part. The manifolds, discharge fittings (pipe sockets, shut-off devices), and shut-off valves must be protected from damage by external forces. Manifold piping leading to shut-off valves must be sufficiently flexible to protect the valves and the piping from shearing, or releasing the pressure receptacle contents. The filling and discharge devices, including flanges or threaded plugs, and any protective caps must be capable of being secured against unintended opening.

(2) Each pressure receptacle intended for the transport of Division 2.3 gases must be equipped with an individual shut-off valve. The manifold for Division 2.3 liquefied gases must be designed so that each pressure receptacle can be filled separately and be kept isolated by a valve capable of being closed during transit. For Division 2.1 gases, the pressure receptacles must be isolated by an individual shut-off valve into assemblies of not more than 3,000 L.

(3) For MEGC filling and discharge openings:

(i) Two valves in series must be placed in an accessible position on each

discharge and filling pipe. One of the valves may be a backflow prevention valve. (ii) The filling and discharge devices may be equipped to a manifold.

(iii) For sections of piping which can be closed at both ends and where a liquid product can be trapped, a pressure-relief valve must be provided to prevent excessive pressure build-up.

(iv) The main isolation valves on a MEGC must be clearly marked to indicate their directions of closure. All shutoff valves must close by a clockwise motion of the handwheel.

(v) Each shut-off valve or other means of closure must be designed and constructed to withstand a pressure equal to or greater than 1.5 times the test pressure of the MEGC.

(vi) All shut-off valves with screwed spindles must close by a clockwise motion of the handwheel. For other shut-off valves, the open and closed positions and the direction of closure must be clearly shown.

(vii) All shut-off valves must be designed and positioned to prevent unintentional opening.

(viii) Ductile metals must be used in the construction of valves or accessories.

(4) The piping must be designed, constructed and installed to avoid damage due to expansion and contraction, mechanical shock and vibration. Joints in tubing must be brazed or have an equally strong metal union. The melting point of brazing materials must be no lower than 525 °C (977 °F). The rated pressure of the service equipment and of the manifold must be not less than two-thirds of the test pressure of the pressure receptacles.

(f) *Pressure relief devices*. Each pressure receptacle must be equipped with one or more pressure relief devices as specified in §173.301(f) of this subchapter. When pressure relief devices are installed, each pressure receptacle or group of pressure receptacles of a MEGC that can be isolated must be equipped with one or more pressure relief devices. Pressure relief devices must be of a type that will resist dynamic forces including liquid surge and must be designed to prevent the entry of foreign matter, the leakage of gas and the development of any dangerous excess pressure.

(1) The size of the pressure relief devices: CGA S–1.1 (IBR, see §171.7 of this subchapter) must be used to determine the relief capacity of individual pressure receptacles.

(2) Connections to pressure-relief devices: Connections to pressure relief devices must be of sufficient size to enable the required discharge to pass unrestricted to the pressure relief device. A shut-off valve installed between the pressure receptacle and the pressure relief device is prohibited, except where duplicate devices are provided for maintenance or other reasons, and the shut-off valves serving the devices actually in use are locked open, or the shut-off valves are interlocked so that at least one of the duplicate devices is always operable and capable of meeting the requirements of paragraph (f)(1) of this section. No obstruction is permitted in an opening leading to or leaving from a vent or pressure-relief device that might restrict or cut-off the flow from the pressure receptacle to that device. The opening through all piping and fittings must have at least the same flow area as the inlet of the pressure relief device to which it is connected. The nominal size of the discharge piping must be at least as large as that of the pressure relief device.

(3) Location of pressure-relief devices: For liquefied gases, each pressure relief device must, under maximum filling conditions, be in communication with the vapor space of the pressure receptacles. The devices, when installed, must be arranged to ensure the escaping vapor is discharged upwards and unrestrictedly to prevent impingement of escaping gas or liquid upon the MEGC, its pressure receptacles or personnel. For flammable, pyrophoric and oxidizing gases, the escaping gas must be directed away from the pressure receptacle in such a manner that it cannot impinge upon the other pressure receptacles. Heat resistant protective devices that deflect the flow of gas are permissible provided the required pressure relief device capacity is not reduced. Arrangements must be made to prevent access to the pressure relief devices by unauthorized persons and to protect the devices from damage caused by rollover.

(g) *Gauging devices.* When a MEGC is intended to be filled by mass, it must be equipped with one or more gauging devices. Glass level-gauges and gauges made of other fragile material are prohibited.

(h) *MEGC supports, frameworks, lifting and tie-down attachments.* (1) MEGCs must be designed and constructed with a support structure to provide a secure base during transport. MEGCs must be protected against damage to the pressure receptacles and service equipment resulting from lateral and longitudinal impact and overturning. The forces specified in paragraph (d)(8) of this section, and the safety factor specified in paragraph (d)(10) of this section must be considered in this aspect of the design. Skids, frameworks, cradles or other similar structures are acceptable. If the pressure receptacles and service equipment are so constructed as to withstand impact and overturning, additional protective support structure is not required (see paragraph (h)(4) of this section).

(2) The combined stresses caused by pressure receptacle mountings (e.g. cradles, frameworks, etc.) and MEGC lifting and tie-down attachments must not cause excessive stress in any pressure receptacle. Permanent lifting and tie-down attachments must be equipped to all MEGCs. Any welding of mountings or attachments onto the pressure receptacles is prohibited.

(3) The effects of environmental corrosion must be taken into account in the design of supports and frameworks.

(4) When MEGCs are not protected during transport as specified in paragraph (h)(1) of this section, the pressure receptacles and service equipment must be protected against damage resulting from lateral or longitudinal impact or overturning. External fittings must be protected against release of the pressure receptacles' contents upon impact or overturning of the MEGC on its fittings. Particular attention must be paid to the protection of the manifold. Examples of protection include:

(i) Protection against lateral impact, which may consist of longitudinal bars;

(ii) Protection against overturning, which may consist of reinforcement rings or bars fixed across the frame;

(iii) Protection against rear impact, which may consist of a bumper or frame;

(iv) Protection of the pressure receptacles and service equipment against damage from impact or overturning by use of an ISO frame according to the relevant provisions of ISO 1496–3. (IBR, see § 171.7 of this subchapter).

(i) *Initial inspection and test.* The pressure receptacles and items of equipment of each MEGC must be inspected and tested before being put into service for the first time (initial inspection and test). This initial inspection and test of an MEGC must include the following:

(1) A check of the design characteristics.

(2) An external examination of the MEGC and its fittings, taking into account the hazardous materials to be transported.

(3) A pressure test performed at the test pressures specified in § 173.304b(b)(1) and (2) of this subchapter. The pressure test of the manifold may be performed as a hydraulic test or by using another liquid or gas. A leakproofness test and a test of the satisfactory operation of all service equipment must also be performed before the MEGC is placed into service. When the pressure receptacles and their fittings have been pressure-tested separately, they must be subjected to a leakproof test after assembly.

(4) An MEGC that meets the definition of ''container'' in the CSC (see 49 CFR 450.3(a)(2)) must be subjected to an impact test using a prototype representing each design type. The prototype MEGC must be shown to be capable of absorbing the forces resulting from an impact not less than 4 times (4 g) the MPGM of the fully loaded MEGC, at a duration typical of the mechanical shocks experienced in rail transport. A listing of acceptable methods for performing the impact test is provided in the UN Recommendations (IBR, see § 171.7 of this subchapter).

(j) *Marking.* (1) Each MEGC must be equipped with a corrosion resistant metal plate permanently attached to

the MEGC in a conspicuous place readily accessible for inspection. The pressure receptacles must be marked according to this section. Affixing the metal plate to a pressure receptacle is prohibited. At a minimum, the following information must be marked on the plate by stamping or by any other equivalent method:

Country of manufacture

UN

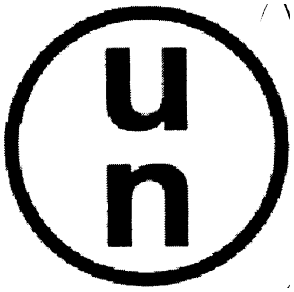

Approval Country

Approval Number

Alternate Arrangements (see §178.75(b))

MEGC Manufacturer's name or mark

MEGC's serial number

Approval agency (Authorized body for the design approval)

Year of manufacture

Test pressure: _____ bar gauge

Design temperature range _____ °C to _____ °C

Number of pressure receptacles _____

Total water capacity _____ liters

Initial pressure test date and identification of the Approval Agency

Date and type of most recent periodic tests

Year _____ Month_____ Type _____

(e.g. 2004–05, AE/UE, where ''AE'' represents acoustic emission and ''UE'' represents ultrasonic examination)

Stamp of the approval agency who performed or witnessed the most recent test

(2) The following information must be marked on a metal plate firmly secured to the MEGC:

Name of the operator

Maximum permissible load mass _____ kg

Working pressure at 15 °C: _____ bar gauge

Maximum permissible gross mass (MPGM) _____ kg

Unladen (tare) mass _____ kg

[71 FR 33892, June 12, 2006, as amended at 73 FR 4719, Jan. 28, 2008; 77 FR 60943, Oct. 5, 2012]

APPENDIX A TO SUBPART C OF PART 178—ILLUSTRATIONS: CYLINDER TENSILE SAMPLE

The following figures illustrate the recommended locations for test specimens taken from welded cylinders:

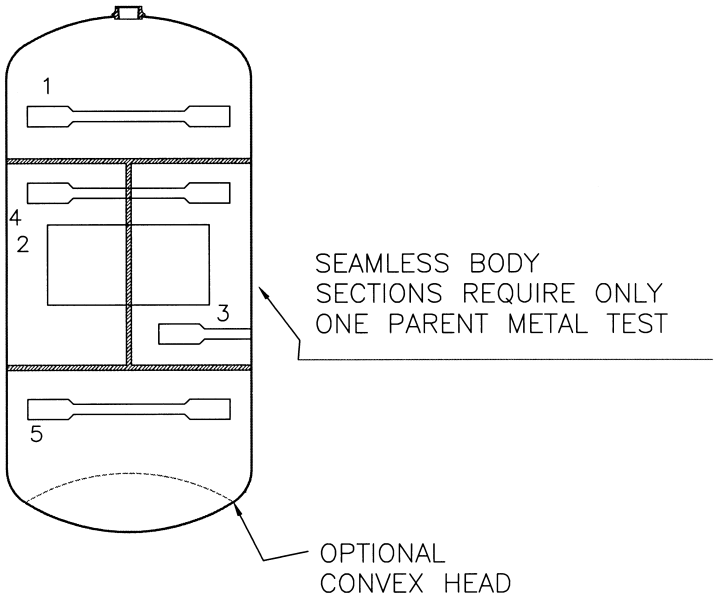

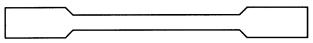

PARENT MATERIAL TEST
SAMPLE 1 & 3 & 5

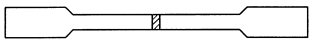

WELD TENSILE TEST
SAMPLE 4

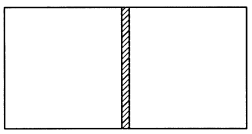

WELD BEND TEST
SAMPLE 2

THIS FIGURE ILLUSTRATES THE PROPER TENSILE LOCATION FOR A 3 PIECE CYLINDER WITH THE HEADS HAVING STRAIGHT SIDEWALL.

FIGURE #1

(12)	(13)	(14)	(15)	(16)	(17)	(18)	(19)
25E	USA	765432	H			UW	FINAL 2XXX/XX

(10)	(6)	(7)	(8)	(11)	(9)
PW200	PH300BAR	RCPXXXBAR	62.1 KG	50L	5.8MM

(1)	(2)	(3)	(4)	(5)
UN	ISO 9809-1	USA/MXXXX	IB	2005/12

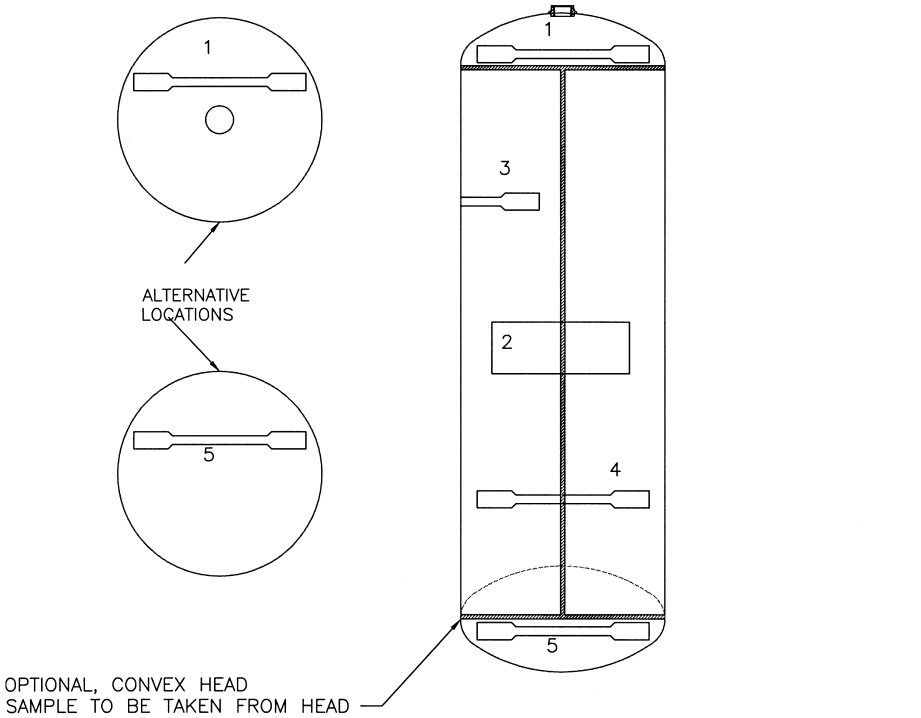

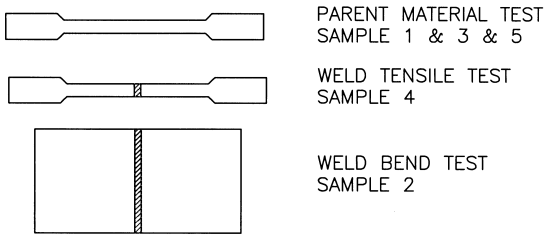

THIS FIGURE ILLUSTRATES THE PROPER TENSILE LOCATION FOR A 2 PIECE CYLINDER THAT HAVE DEEP DRAWN HEADS.

FIGURE #3

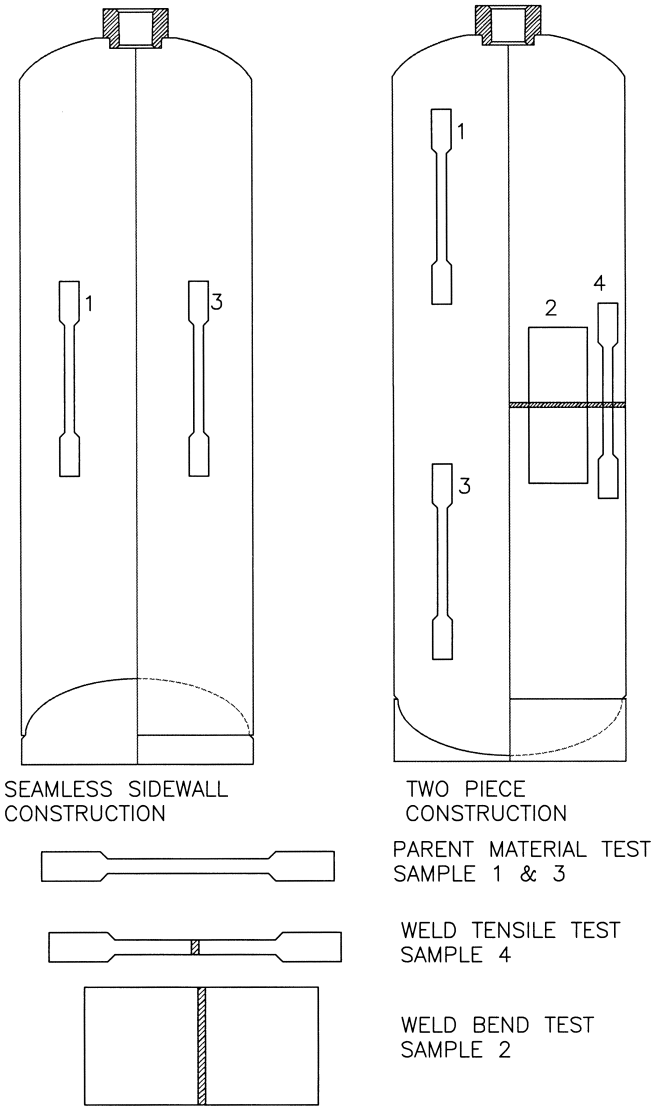

THIS FIGURE ILLUSTRATES THE PROPER TENSILE LOCATION FOR A 2 PIECE CYLINDER THAT HAVE DEEP DRAWN HEADS.

FIGURE #4

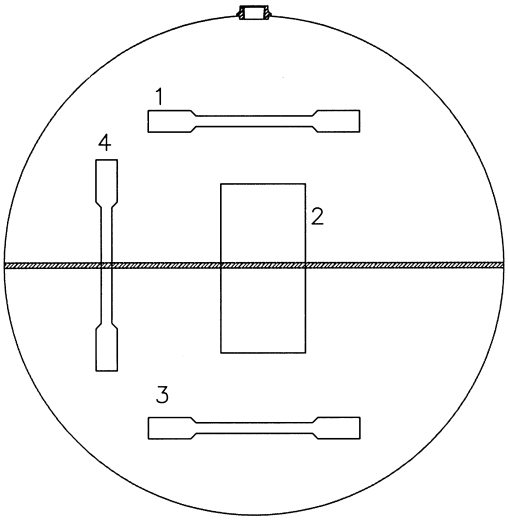

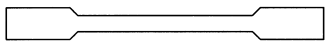

PARENT MATERIAL TEST
SAMPLE 1 & 3

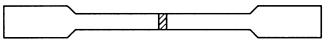

WELD TENSILE TEST
SAMPLE 4

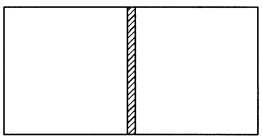

WELD BEND TEST
SAMPLE 2

THIS FIGURE ILLUSTRATES THE PROPER TENSILE LOCATION FOR A 2 PIECE CYLINDER.

FIGURE #5

[67 FR 51654, Aug. 8, 2002]

Subparts D–G [Reserved]

Subpart H—Specifications for Portable Tanks

SOURCE: 29 FR 18972, Dec. 29, 1964, unless otherwise noted. Redesignated at 32 FR 5606, Apr. 5, 1967.

§§ 178.251—178.253–5 [Reserved]

§ 178.255 Specification 60; steel portable tanks.

§ 178.255–1 General requirements.

(a) Tanks must be of fusion welded construction, cylindrical in shape with seamless heads concave to the pressure. Tank shells may be of seamless construction.

(b) Tanks must be designed, constructed, certified, and stamped in accordance with Section VIII of the ASME Code (IBR, see § 171.7 of this subchapter).

(c) Tanks including all permanent attachments must be postweld heat treated as a unit.

(d) Requirements concerning types of valves, retesting, and qualification of portable tanks contained in §§ 173.32 and 173.315 of this chapter must be observed.

[29 FR 18972, Dec. 29, 1964. Redesignated at 32 FR 5606, Apr. 5, 1967, and amended by Amdt. 178–7, 34 FR 18250, Nov. 14, 1969; 68 FR 75750, Dec. 31, 2003]

§ 178.255–2 Material.

(a) Material used in the tank must be steel of good weldable quality and conform with the requirements in Sections V, VIII, and IX of the ASME Code (IBR, see § 171.7 of this subchapter).

(b) The minimum thickness of metal, exclusive of lining material, for shell and heads of tanks shall be as follows:

Tank capacity	Minimum thickness (inch)
Not more than 1,200 gallons	1/4
Over 1,200 to 1,800 gallons	5/16
Over 1,800 gallons	3/8

[29 FR 18972, Dec. 29, 1964. Redesignated at 32 FR 5606, Apr. 5, 1967, and amended by Amdt. 178–7, 34 FR 18250, Nov. 14, 1969; 68 FR 75750, Dec. 31, 2003]

§ 178.255–3 Expansion domes.

(a) Expansion domes, if applied, must have a minimum capacity of one percent of the combined capacity of the tank and dome.

(b) [Reserved]

§ 178.255–4 Closures for manholes and domes.

(a) The manhole cover shall be designed to provide a secure closure of the manhole. All covers, not hinged to the tanks, shall be attached to the outside of the dome by at least 1/8 inch chain or its equivalent. Closures shall be made tight against leakage of vapor and liquid by use of gaskets of suitable material.

(b) [Reserved]

§ 178.255–5 Bottom discharge outlets.

(a) Bottom discharge outlets prohibited, except on tanks used for shipments of sludge acid and alkaline corrosive liquids.

(b) If installed, bottom outlets or bottom washout chambers shall be of metal not subject to rapid deterioration by the lading, and each shall be provided with a valve or plug at its upper end and liquid-tight closure at it lower end. Each valve or plug shall be designed to insure against unseating due to stresses or shocks incident to transportation. Bottom outlets shall be adequately protected against handling damage and outlet equipment must not extend to within less than one inch of the bottom bearing surface of the skids or tank mounting.

[29 FR 18972, Dec. 29, 1964. Redesignated at 32 FR 5606, Apr. 5, 1967, as amended by Amdt. 178–104, 59 FR 49135, Sept. 26, 1994]

§ 178.255–6 Loading and unloading accessories.

(a) When installed, gauging, loading and air inlet devices, including their valves, shall be provided with adequate means for their secure closure; and means shall also be provided for the closing of pipe connections of valves.

(b) Interior heater coils, if installed, must be of extra heavy pipe and so constructed that breaking off of exterior connections will not cause leakage of tanks.

§ 178.255–7 Protection of valves and accessories.

(a) All valves, fittings, accessories, safety devices, gauging devices, and the like shall be adequately protected against mechanical damage by a housing closed with a cover plate.

(b) Protective housing shall comply with the requirements under which the tanks are fabricated with respect to design and construction, and shall be designed with a minimum factor of safety of four to withstand loadings in any direction equal to two times the weight of the tank and attachments when filled with water.

§ 178.255–8 Safety devices.

(a) See § 173.315(i) of this subchapter.

(b) [Reserved]

[Amdt. 178–83, 50 FR 11066, Mar. 19, 1985]

§ 178.255–9 Compartments.

(a) When the interior of the tank is divided into compartments, each compartment shall be designed, constructed and tested as a separate tank. Thickness of shell and compartment heads shall be determined on the basis of total tank capacity.

(b) [Reserved]

§ 178.255–10 Lining.

(a) If a lining is required, the material used for lining the tank shall be homogeneous, nonporous, imperforate when applied, not less elastic than the metal of the tank proper. It shall be of substantially uniform thickness, not less than 1/32 inch thick if metallic, and not less than 1/16 inch thick if nonmetallic, and shall be directly bonded or attached by other equally satisfactory means. Rubber lining shall be not less than 3/16 inch thick. Joints and seams in the lining shall be made by fusing the material together or by other equally satisfactory means. The interior of the tank shall be free from scale, oxidation, moisture and all foreign matter during the lining operation.

(b) [Reserved]

§ 178.255–11 Tank mountings.

(a) Tanks shall be designed and fabricated with mountings to provide a secure base in transit. ''Skids'' or similar devices shall be deemed to comply with this requirement.

(b) All tank mountings such as skids, fastenings, brackets, cradles, lifting lugs, etc., intended to carry loadings shall be permanently secured to tanks in accordance with the requirements under which the tanks are fabricated, and shall be designed with a factor of safety of four, and built to withstand loadings in any direction equal to two times the weight of the tanks and attachments when filled to the maximum permissible loaded weight.

(c) Lifting lugs or side hold-down lugs shall be provided on the tank mountings in a manner suitable for attaching lifting gear and hold-down devices. Lifting lugs and hold-down lugs welded directly to the tank shall be of the pad-eye type. Doubling plates welded to the tank and located at the points of support shall be deemed to comply with this requirement.

(d) All tank mountings shall be so designed as to prevent the concentration of excessive loads on the tank shell.

§ 178.255–12 Pressure test.

(a) Each completed portable tank prior to application of lining shall be tested before being put into transportation service by completely filling the tank with water or other liquid having a similar viscosity, the temperature of which shall not exceed 100 °F during the test, and applying a pressure of 60 psig. The tank shall be capable of holding the prescribed pressure for at least 10 minutes without leakage, evidence of impending failure, or failure. All closures shall be in place while the test is made and the pressure shall be gauged at the top of the tank. Safety devices and/or vents shall be plugged during this test.

(b) [Reserved]

[29 FR 18972, Dec. 29, 1964. Redesignated at 32 FR 5606, Apr. 5, 1967, as amended by Amdt. 178–104, 59 FR 49135, Sept. 26, 1994]

§ 178.255–13 Repair of tanks.

(a) Tanks failing to meet the test may be repaired and retested, provided that repairs are made in complete compliance with the requirements of this specification.

(b) [Reserved]

§ 178.255–14 Marking.

(a) In addition to markings required by Section VIII of the ASME Code (IBR, see § 171.7 of this subchapter), every tank shall bear permanent marks at least 1/8-inch high stamped into the metal near the center of one of the tank heads or stamped into a plate permanently attached to the tank by means of brazing or welding or other suitable means as follows:

Manufacturer's name _____ Serial No. _____
DOT specification _____
Nominal capacity _____ (gallons)
Tare weight _____ (pounds)
Date of manufacture _____

(b) [Reserved]

[29 FR 18972, Dec. 29, 1964. Redesignated at 32 FR 5606, Apr. 5, 1967, and amended by Amdt. 178–67, 46 FR 49906, Oct. 8, 1981; 68 FR 75750, Dec. 31, 2003]

§ 178.255–15 Report.

(a) A copy of the manufacturer's data report required by Section VIII of the ASME Code (IBR, see § 171.7 of this subchapter) under which the tank is fabricated must be furnished to the owner for each new tank.

Place _____
Date _____

Portable tank

Manufactured for _____ Company
Location _____
Manufactured by _____ Company
Location _____
Consigned to _____ Company
Location _____
Size _____ feet outside diameter by _____ long.
Marks on tank as prescribed by § 178.255–14 of this specification are as follows:
Manufacturer's name _____
Serial number _____
Owner's serial number _____
DOT specification _____
ASME Code Symbol (par U–201) _____
Date of manufacture _____
Nominal capacity _____ gallons.

It is hereby certified that this tank is in complete compliance with the requirements of *DOT specification No. 60*.

(Signed) _____
Manufacturer or owner

(b) [Reserved]

[29 FR 18972, Dec. 29, 1964. Redesignated at 32 FR 5606, Apr. 5, 1967, and amended by Amdt. 178–83, 50 FR 11066, Mar. 19, 1985; 68 FR 75750, Dec. 31, 2003]

§ 178.273 Approval of Specification UN portable tanks.

(a) *Application for approval.* (1) An owner or manufacturer of a portable tank shall apply for approval to a designated approval agency authorized to approve the portable tank in accordance with the procedures in subpart E, part 107 of this subchapter.

(2) Each application for approval must contain the following information:

(i) Two complete copies of all engineering drawings, calculations, and test data necessary to ensure that the design meets the relevant specification.

(ii) The manufacturer's serial number that will be assigned to each portable tank.

(iii) A statement as to whether the design type has been examined by any approval agency previously and judged unacceptable. Affirmative statements must be documented with the name of the approval agency, reason for non-acceptance, and the nature of modifications made to the design type.

(b) *Action by approval agency.* The approval agency must perform the following activities:

(1) Review the application for approval to determine whether it is complete and conforms with the requirements of paragraph (a) of this section. If an application is incomplete, it will be returned to the applicant with an explanation as to why the application is incomplete.

(2) Review all drawings and calculations to ensure that the design is in compliance with all requirements of the relevant specification. If the application is approved, one set of the approved drawings, calculations, and test data shall be returned to the applicant. The second (inspector's copy) set of approved drawings, calculations, and test data shall be retained by the approval agency. Maintain drawings and approval records for as long as the portable tank remains in service. The drawings and records must be provided to the Department of Transportation (DOT) upon request.

(3) Witness all tests required for the approval of the portable tank specified in this section and part 180, subpart G of this subchapter.

(4) Ensure, through appropriate inspection that each portable tank is fabricated in all respects in conformance with the approved drawings, calculations, and test data.

(5) Determine and ensure that the portable tank is suitable for its intended use and that it conforms to the requirements of this subchapter.

(6) For UN portable tanks intended for non-refrigerated and refrigerated liquefied gases and Division 6.1 liquids which meet the inhalation toxicity criteria (Zone A or B) as defined in § 173.132 of this subchapter, or that are designated as toxic by inhalation materials in the § 172.101 Table of this subchapter, the approval agency must ensure that:

(i) The portable tank has been designed, constructed, certified, and stamped in accordance with the requirements in Division 1 of Section VIII of the ASME Code (IBR, see § 171.7 of this subchapter). Other design codes may be used if approved by the Associate Administrator (see § 178.274(b)(1));

(ii) All applicable provisions of the design and construction have been met to the satisfaction of the designated approval agency in accordance with the rules established in the ASME Code and that the portable tank meets the requirements of the ASME Code and all the applicable requirements specified in this subchapter;

(iii) The inspector has carried out all the inspections specified by the rules established in the ASME Code; and

(iv) The portable tank is marked with a U stamp code symbol under the authority of the authorized independent inspector.

(7) Upon successful completion of all requirements of this subpart, the approval agency must:

(i) Apply its name, identifying mark or identifying number, and the date upon which the approval was issued, to the metal identification marking plate attached to the portable tank. Any approvals for UN portable tanks authorizing design or construction alternatives (Alternate Arrangements) approved by the Associate Administrator (see § 178.274(a)(2)) must be indicated on the plate as specified in § 178.274(i).

(ii) Issue an approval certificate for each portable tank or, in the case of a series of identical portable tanks manufactured to a single design type, for each series of portable tanks. The approval certificate must include all the information required to be displayed on the metal identification plate required by § 178.274(i). The approval certificate must certify that the approval agency designated to approve the portable tank has approved the portable tank in accordance with the procedures in subpart E of part 107 of this subchapter and that the portable tank is suitable for its intended purpose and meets the requirements of this subchapter. When a series of portable tanks is manufactured without change in the design type, the certificate may be valid for the entire series of portable tanks representing a single design type. For UN portable tanks, the certificate must refer to the prototype test report, the hazardous material or group of hazardous materials allowed to be transported, the materials of construction of the shell and lining (when applicable) and an approval number. The approval number must consist of the distinguishing sign or mark of the country (''USA'' for the United States of America) where the approval was granted and a registration number.

(iii) Retain a copy of each approval certificate.

(8) For UN portable tanks, the approval certificate must also include the following:

(i) The results of the applicable framework and rail impact test specified in part 180, subpart G, of this subchapter; and

(ii) The results of the initial inspection and test in § 178.274(j).

(9) The approval agency shall be independent from the manufacturer. The approval agency and the authorized inspector may be the same entity.

(c) *Manufacturers' responsibilities.* The manufacturer is responsible for compliance with the applicable specifications for the design and construction of portable tanks. In addition to responsibility for compliance, manufacturers are responsible for ensuring that the contracted approval agency and authorized inspector, if applicable, are qualified, reputable and competent. The manufacturer of a portable tank shall—

(1) Comply with all the applicable requirements of the ASME Code and of this subpart including, but not limited to, ensuring that the quality control, design calculations and required tests are performed and that all aspects of the portable tank meet the applicable requirements.

(2) Obtain and use a designated approval agency, if applicable, and obtain and use a DOT-designated approval agency to approve the design, construction and certification of the portable tank.

(3) Provide a statement in the manufacturers' data report certifying that each portable tank that is manufactured complies with the relevant specification and all the applicable requirements of this subchapter.

(4) Maintain records of the qualification of portable tanks for at least 5 years and provide copies to the approval agency, the owner or lessee of the tank. Upon request, provide these records to a representative of DOT.

(d) *Denial of application for approval.* If an approval agency finds that a portable tank cannot be approved for any reason, it shall notify the applicant in writing and shall provide the applicant with the reasons for which the approval is denied. A copy of the notification letter shall be provided to the Associate Administrator. An applicant aggrieved by a decision of an approval agency may appeal the decision in writing, within 90 days of receipt, to the Associate Administrator.

(e) *Modifications to approved portable tanks.* (1) Prior to modification of any UN portable tank which may affect conformance and the safe use of the portable tank, which may involve a change to the design type or which may affect its ability to retain hazardous material in transportation, the person desiring to make such modification shall inform the approval agency that issued the initial approval of the portable tank (or if unavailable, another approval agency) of the nature of the modification and request approval of the modification. The person desiring to modify the tank must supply the approval agency with three sets of all revised drawings, calculations, and test data relative to the intended modification.

(2) A statement as to whether the intended modification has been examined and determined to be unacceptable by any approval agency. The written statement must include the name of the approving agency, the reason for nonacceptance, and the nature of changes made to the modification since its original rejection.

(3) The approval agency shall review the request for modification, and if it is determined that the proposed modification is in full compliance with the relevant DOT specification, including a UN portable tank, the request shall be approved and the approval agency shall perform the following activities:

(i) Return one set of the approved revised drawings, calculations, and test data to the applicant. The second and third sets of the approved revised drawings, calculations, and data shall be retained by the approval agency as required in §107.404(a)(3) of this subchapter.

(ii) Ensure through appropriate inspection that all modifications conform to the revised drawings, calculations, and test data.

(iii) Determine the extent to which retesting of the modified tank is necessary based on the nature of the proposed modification, and ensure that all required retests are satisfactorily performed.

(iv) If modification to an approved tank alters any information on the approval certificate, issue a new approval certificate for the modified tank and ensure that any necessary changes are made to the metal identification plate. A copy of each newly issued approval certificate shall be retained by the approval agency and by the owner of each portable tank.

(4) If the approval agency determines that the proposed modification is not in compliance with the relevant DOT specification, the approval agency shall deny the request in accordance with paragraph (d) of this section.

(f) *Termination of Approval Certificate.* (1) The Associate Administrator may terminate an approval issued under this section if he determines that—

(i) Information upon which the approval was based is fraudulent or substantially erroneous; or

(ii) Termination of the approval is necessary to adequately protect against risks to life and property; or

(iii) The approval was not issued by the approval agency in good faith; or

(iv) The portable tank does not meet the specification.

(2) Before an approval is terminated, the Associate Administrator gives the interested party(ies):

(i) Written notice of the facts or conduct believed to warrant the termination;

(ii) Opportunity to submit oral and written evidence; and

(iii) Opportunity to demonstrate or achieve compliance with the applicable requirements.

(3) If the Associate Administrator determines that a certificate of approval must be terminated to preclude a significant and imminent adverse affect on public safety, he may terminate the certificate immediately. In such circumstances, the opportunities of paragraphs (f)(2) (ii) and (iii) of this section need not be provided prior to termination of the approval, but shall be provided as soon as practicable thereafter.

[66 FR 33439, June 21, 2001, as amended at 67 FR 61016, Sept. 27, 2002; 68 FR 75748, 75751, Dec. 31, 2003; 72 FR 55695, Oct. 1, 2007]

§ 178.274 Specifications for UN portable tanks.

(a) *General*. (1) Each UN portable tank must meet the requirements of this section. In addition to the requirements of this section, requirements specific to UN portable tanks used for liquid and solid hazardous materials, non-refrigerated liquefied gases and refrigerated liquefied gases are provided in §§178.275, 178.276 and 178.277, respectively. Requirements for approval, maintenance, inspection, testing and use are provided in §178.273 and part 180, subpart G, of this subchapter. Any portable tank which meets the definition of a ''container'' within the terms of the International Convention for Safe Containers (CSC) must meet the requirements of the CSC as amended and 49 CFR parts 450 through 453 and must have a CSC safety approval plate.

(2) In recognition of scientific and technological advances, the technical requirements applicable to UN portable tanks may be varied if approved by the Associate Administrator and the portable tank is shown to provide a level of safety equal to or exceeding the requirements of this subchapter. Portable tanks approved to alternative technical requirements must be marked ''Alternative Arrangement'' as specified in paragraph (i) of this section.

(3) *Definitions*. The following definitions apply for the purposes of design and construction of UN portable tanks under this subpart:

Alternate Arrangement portable tank means a UN portable tank that has been approved to alternative technical requirements or testing methods other than those specified for UN portable tanks in part 178 or part 180 of this subchapter.

Approval agency means the designated approval agency authorized to approve the portable tank in accordance with the procedures in subpart E of part 107 of this subchapter.

Design pressure is defined according to the hazardous materials intended to be transported in the portable tank. See §§178.275, 178.276 and 178.277, as applicable.

Design type means a portable tank or series of portable tanks made of materials of the same material specifications and thicknesses, manufactured by a single manufacturer, using the same fabrication techniques (for example, welding procedures) and made with equivalent structural equipment, closures, and service equipment.

Fine grain steel means steel that has a ferritic grain size of 6 or finer when determined in accordance with ASTM E 112–96 (IBR, see §171.7 of this subchapter).

Fusible element means a non-reclosing pressure relief device that is thermally activated and that provides protection against excessive pressure buildup in the portable tank developed by exposure to heat, such as from a fire (see §178.275(g)).

Jacket means the outer insulation cover or cladding which may be part of the insulation system.

Leakage test means a test using gas to subject the shell and its service equipment to an internal pressure.

Maximum allowable working pressure (MAWP) is defined according to the hazardous materials intended to be transported in the portable tank. See §§ 178.275, 178.276 and 178.277, as applicable.

Maximum permissible gross mass (MPGM) means the sum of the tare mass of the portable tank and the heaviest hazardous material authorized for transportation.

Mild steel means a steel with a guaranteed minimum tensile strength of 360 N/mm^2 to 440 N/mm^2 and a guaranteed minimum elongation at fracture as specified in paragraph (c)(10) of this section.

Offshore portable tank means a portable tank specially designed for repeated use in the transportation of hazardous materials to, from and between offshore facilities. An offshore portable tank is designed and constructed in accordance with the Guidelines for the Approval of Containers Handled in Open Seas specified in the IMDG Code (IBR, see § 171.7 of this subchapter).

Reference steel means a steel with a tensile strength of 370 N/mm^2 and an elongation at fracture of 27%.

Service equipment means measuring instruments and filling, discharge, venting, safety, heating, cooling and insulating devices.

Shell means the part of the portable tank which retains the hazardous materials intended for transportation, including openings and closures, but does not include service equipment or external structural equipment.

Structural equipment means the reinforcing, fastening, protective and stabilizing members external to the shell.

Test pressure means the maximum gauge pressure at the top of the shell during the hydraulic pressure test equal to not less than 1.5 times the design pressure for liquids and 1.3 for liquefied compressed gases and refrigerated liquefied gases. In some instances a pneumatic test is authorized as an alternative to the hydraulic test. The minimum test pressures for portable tanks intended for specific liquid and solid hazardous materials are specified in the applicable portable tank T codes (such as T1–T23) assigned to these hazardous materials in the § 172.101 Table of this subchapter.

(b) *General design and construction requirements.* (1) The design temperature range for the shell must be −40 °C to 50 °C (−40 °F to 122 °F) for hazardous materials transported under normal conditions of transportation, except for portable tanks used for refrigerated liquefied gases where the minimum design temperature must not be higher than the lowest (coldest) temperature (for example, service temperature) of the contents during filling, discharge or transportation. For hazardous materials handled under elevated temperature conditions, the design temperature must not be less than the maximum temperature of the hazardous material during filling, discharge or transportation. More severe design temperatures must be considered for portable tanks subjected to severe climatic conditions (for example, portable tanks transported in arctic regions). Shells must be designed and constructed in accordance with the requirements in Section VIII of the ASME Code (IBR, see § 171.7 of this subchapter), except as limited or modified in this subchapter. For portable tanks used for liquid or solid hazardous materials, a design code other than the ASME Code may be used if approved by the Associate Administrator. Portable tanks must have an ASME certification and U stamp when used for Hazard Zone A or B toxic by inhalation liquids, or when used for non-refrigerated or refrigerated liquefied compressed gases. Shells must be made of metallic materials suitable for forming. Nonmetallic materials may be used for the attachments and supports between the shell and jacket, provided their material properties at the minimum and maximum design temperatures are proven to be sufficient. For welded shells, only a material whose weldability has been fully demonstrated may be used. Welds must be of high quality and conform to a level of integrity at least equivalent to the welding requirements specified in Section VIII of the ASME Code for the welding of pressure vessels. When the manufacturing process or the materials make it necessary, the shells must be suitably heat-treated to guarantee adequate toughness in the weld and in the heat-affected zones. In choosing the

material, the design temperature range must be taken into account with respect to risk of brittle fracture, stress corrosion cracking, resistance to impact, and suitability for the hazardous materials intended for transportation in the portable tank. When fine grain steel is used, the guaranteed value of the yield strength must be not more than 460 N/mm^2 and the guaranteed value of the upper limit of the tensile strength must be not more than 725 N/mm^2 according to the material specification. Aluminum may not be used as a construction material for the shells of portable tanks intended for the transport of non-refrigerated liquefied gases. For portable tanks intended for the transport of liquid or solid hazardous materials, aluminum may only be used as a construction material for portable tank shells if approved by the Associate Administrator. Portable tank materials must be suitable for the external environment where they will be transported, taking into account the determined design temperature range. Portable tanks shall be designed to withstand, without loss of contents, at least the internal pressure due to the contents and the static, dynamic and thermal loads during normal conditions of handling and transportation. The design must take into account the effects of fatigue, caused by repeated application of these loads through the expected life of the portable tank.

(2) Portable tank shells, fittings, and pipework shall be constructed from materials that are:

(i) Compatible with the hazardous materials intended to be transported; or

(ii) Properly passivated or neutralized by chemical reaction, if applicable; or

(iii) For portable tanks used for liquid and solid materials, lined with corrosion-resistant material directly bonded to the shell or attached by equivalent means.

(3) Gaskets and seals shall be made of materials that are compatible with the hazardous materials intended to be transported.

(4) When shells are lined, the lining must be compatible with the hazardous materials intended to be transported, homogeneous, non-porous, free from perforations, sufficiently elastic and compatible with the thermal expansion characteristics of the shell. The lining of every shell, shell fittings and piping must be continuous and must extend around the face of any flange. Where external fittings are welded to the tank, the lining must be continuous through the fitting and around the face of external flanges. Joints and seams in the lining must be made by fusing the material together or by other equally effective means.

(5) Contact between dissimilar metals which could result in damage by galvanic action must be prevented by appropriate measures.

(6) The construction materials of the portable tank, including any devices, gaskets, linings and accessories, must not adversely affect or react with the hazardous materials intended to be transported in the portable tank.

(7) Portable tanks must be designed and constructed with supports that provide a secure base during transportation and with suitable lifting and tie-down attachments.

(c) *Design criteria.* (1) Portable tanks and their fastenings must, under the maximum permissible loads and maximum permissible working pressures, be capable of absorbing the following separately applied static forces (for calculation purposes, acceleration due to gravity (g) =9.81m/s^2):

(i) In the direction of travel: 2g (twice the MPGM multiplied by the acceleration due to gravity);

(ii) Horizontally at right angles to the direction of travel: 1g (the MPGM multiplied by the acceleration due to gravity);

(iii) Vertically upwards: 1g (the MPGM multiplied by the acceleration due to gravity); and

(iv) Vertically downwards: 2g (twice the MPGM multiplied by the acceleration due to gravity).

(2) Under each of the forces specified in paragraph (c)(1) of this section, the safety factor must be as follows:

(i) For metals having a clearly defined yield point, a design margin of 1.5 in relation to the guaranteed yield strength; or

(ii) For metals with no clearly defined yield point, a design margin of 1.5 in relation to the guaranteed 0.2%

proof strength and, for austenitic steels, the 1% proof strength.

(3) The values of yield strength or proof strength must be the values according to recognized material standards. When austenitic steels are used, the specified minimum values of yield strength or proof strength according to the material standards may be increased by up to 15% for portable tanks used for liquid and solid hazardous materials, other than toxic by inhalation liquids meeting the criteria of Hazard Zone A or Hazard Zone B (see §173.133 of this subchapter), when these greater values are attested in the material inspection certificate.

(4) Portable tanks must be capable of being electrically grounded to prevent dangerous electrostatic discharge when they are used for Class 2 flammable gases or Class 3 flammable liquids, including elevated temperature materials transported at or above their flash point.

(5) For shells of portable tanks used for liquefied compressed gases, the shell must consist of a circular cross section. Shells must be of a design capable of being stress-analyzed mathematically or experimentally by resistance strain gauges as specified in UG–101 of Section VIII of the ASME Code, or other methods approved by the Associate Administrator.

(6) Shells must be designed and constructed to withstand a hydraulic test pressure of not less than 1.5 times the design pressure for portable tanks used for liquids and 1.3 times the design pressure for portable tanks used for liquefied compressed gases. Specific requirements are provided for each hazardous material in the applicable T Code or portable tank special provision specified in the §172.101 Table of this subchapter. The minimum shell thickness requirements must also be taken into account.

(7) For metals exhibiting a clearly defined yield point or characterized by a guaranteed proof strength (0.2% proof strength, generally, or 1% proof strength for austenitic steels), the primary membrane stress σ (sigma) in the shell must not exceed 0.75 Re or 0.50 Rm, whichever is lower, at the test pressure, where:

Re = yield strength in N/mm^2, or 0.2% proof strength or, for austenitic steels, 1% proof strength;

Rm = minimum tensile strength in N/mm^2.

(8) The values of Re and Rm to be used must be the specified minimum values according to recognized material standards. When austenitic steels are used, the specified minimum values for Re and Rm according to the material standards may be increased by up to 15% when greater values are attested in the material inspection certificate.

(9) Steels which have a Re/Rm ratio of more than 0.85 are not allowed for the construction of welded shells. The values of Re and Rm to be used in determining this ratio must be the values specified in the material inspection certificate.

(10) Steels used in the construction of shells must have an elongation at fracture, in percentage, of not less than 10,000/Rm with an absolute minimum of 16% for fine grain steels and 20% for other steels.

(11) For the purpose of determining actual values for materials for sheet metal, the axis of the tensile test specimen must be at right angles (transversely) to the direction of rolling. The permanent elongation at fracture must be measured on test specimens of rectangular cross sections in accordance with ISO 6892 (IBR, see §171.7 of this subchapter), using a 50 mm gauge length.

(d) *Minimum shell thickness.* (1) The minimum shell thickness must be the greatest thickness of the following:

(i) the minimum thickness determined in accordance with the requirements of paragraphs (d)(2) through (d)(7) of this section;

(ii) the minimum thickness determined in accordance with Section VIII of the ASME Code or other approved pressure vessel code; or

(iii) the minimum thickness specified in the applicable T code or portable tank special provision indicated for each hazardous material in the §172.101 Table of this subchapter.

(2) Shells (cylindrical portions, heads and manhole covers) not more than 1.80 m in diameter may not be less than 5 mm thick in the reference steel or of

equivalent thickness in the metal to be used. Shells more than 1.80 m in diameter may not be less than 6 mm (0.2 inches) thick in the reference steel or of equivalent thickness in the metal to be used. For portable tanks used only for the transportation of powdered or granular solid hazardous materials of Packing Group II or III, the minimum thickness requirement may be reduced to 5 mm in the reference steel or of equivalent thickness in the metal to be used regardless of the shell diameter. For vacuum-insulated tanks, the aggregate thickness of the jacket and the shell must correspond to the minimum thickness prescribed in this paragraph, with the thickness of the shell itself not less than the minimum thickness prescribed in paragraph (d)(3) of this section.

(3) When additional protection against shell damage is provided in the case of portable tanks used for liquid and solid hazardous materials requiring test pressures less than 2.65 bar (265.0 kPa), subject to certain limitations specified in the UN Recommendations (IBR, see §171.7 of this subchapter), the Associate Administrator may approve a reduced minimum shell thickness.

(4) The cylindrical portions, heads and manhole covers of all shells must not be less than 3 mm (0.1 inch) thick regardless of the material of construction, except for portable tanks used for liquefied compressed gases where the cylindrical portions, ends (heads) and manhole covers of all shells must not be less than 4 mm (0.2 inch) thick regardless of the material of construction.

(5) When steel is used, that has characteristics other than that of reference steel, the equivalent thickness of the shell and heads must be determined according to the following formula:

$$e_1 = \frac{21.4 e_0 d_1}{1.8m \sqrt[3]{Rm_1 \times A_1}}$$

Where:

e_1 = required equivalent thickness (in mm) of the metal to be used;

e_0 = minimum thickness (in mm) of the reference steel specified in the applicable T code or portable tank special provision indicated for each material in the §172.101 Table of this subchapter;

d_1 = 1.8m, unless the formula is used to determine the equivalent minimum thickness for a portable tank shell that is required to have a minimum thickness of 8mm or 10mm according to the applicable T code indicated in the §172.101 Table of this subchapter. When reference steel thicknesses of 8mm or 10mm are specified, d_1 is equal to the actual diameter of the shell but not less than 1.8m;

Rm_1 = guaranteed minimum tensile strength (in N/mm^2) of the metal to be used;

A_1 = guaranteed minimum elongation at fracture (in %) of the metal to be used according to recognized material standards.

(6) The wall and all parts of the shell may not have a thickness less than that prescribed in paragraphs (d)(2), (d)(3) and (d)(4) of this section. This thickness must be exclusive of any corrosion allowance.

(7) There must be no sudden change of plate thickness at the attachment of the heads to the cylindrical portion of the shell.

(e) *Service equipment.* (1) Service equipment must be arranged so that it is protected against the risk of mechanical damage by external forces during handling and transportation. When the connections between the frame and the shell allow relative movement between the sub-assemblies, the equipment must be fastened to allow such movement without risk of damage to any working part. The external discharge fittings (pipe sockets, shut-off devices) and the internal stop-valve and its seating must be protected against mechanical damage by external forces (for example, by using shear sections). Each internal self-closing stop-valve must be protected by a shear section or sacrificial device located outboard of the valve. The shear section or sacrificial device must break at no more than 70% of the load that would cause failure of the internal self-closing stop valve. The filling and discharge devices (including flanges or threaded plugs) and any protective caps must be capable of being secured against unintended opening.

(2) Each filling or discharge opening of a portable tank must be clearly marked to indicate its function.

(3) Each stop-valve or other means of closure must be designed and constructed to a rated pressure not less than the MAWP of the shell taking

into account the temperatures expected during transport. All stop-valves with screwed spindles must close by a clockwise motion of the handwheel. For other stop-valves, the position (open and closed) and direction of closure must be clearly indicated. All stop-valves must be designed to prevent unintentional opening.

(4) Piping must be designed, constructed and installed to avoid the risk of damage due to thermal expansion and contraction, mechanical shock and vibration. All piping must be of a suitable metallic material. Welded pipe joints must be used wherever possible.

(5) Joints in copper tubing must be brazed or have an equally strong metal union. The melting point of brazing materials must be no lower than 525 °C (977 °F). The joints must not decrease the strength of the tubing, such as may happen when cutting threads. Brazed joints are not authorized for portable tanks intended for refrigerated liquefied gases.

(6) The burst pressure of all piping and pipe fittings must be greater than the highest of four times the MAWP of the shell or four times the pressure to which it may be subjected in service by the action of a pump or other device (except pressure relief devices).

(7) Ductile metals must be used in the construction of valves and accessories.

(f) *Pressure relief devices*—(1) *Marking of pressure relief devices*. Every pressure relief device must be clearly and permanently marked with the following:

(i) the pressure (in bar or kPa) or temperature for fusible elements (in °C) at which it is set to discharge;

(ii) the allowable tolerance at the discharge pressure for reclosing devices;

(iii) the reference temperature corresponding to the rated pressure for frangible discs;

(iv) the allowable temperature tolerance for fusible elements;

(v) The rated flow capacity of the spring loaded pressure relief devices, frangible disc or fusible elements in standard cubic meters of air per second (m^3/s). For spring loaded pressure relief devices, the rated flow capacity must be determined according to ISO 4126–1 (including Technical Corrigendum 1) and ISO 4126–7 (IBR, see §171.7 of this subchapter); and

(vi) The cross sectional flow areas of the spring loaded pressure relief devices, frangible discs, and fusible elements in mm^2; and

(vii) When practicable, the device must show the manufacturer's name and product number.

(2) *Connections to pressure relief devices*. Connections to pressure relief devices must be of sufficient size to enable the required discharge to pass unrestricted to the safety device. No stop-valve may be installed between the shell and the pressure relief devices except where duplicate devices are provided for maintenance or other reasons and the stop-valves serving the devices actually in use are locked open or the stop-valves are interlocked so that at least one of the devices is always in use. There must be no obstruction in an opening leading to a vent or pressure relief device which might restrict or cut-off the flow from the shell to that device. Vents or pipes from the pressure relief device outlets, when used, must deliver the relieved vapor or liquid to the atmosphere in conditions of minimum back-pressure on the relieving devices.

(3) *Location of pressure relief devices*. (i) Each pressure relief device inlet must be situated on top of the shell in a position as near the longitudinal and transverse center of the shell as reasonably practicable. All pressure relief device inlets must, under maximum filling conditions, be situated in the vapor space of the shell and the devices must be so arranged as to ensure that any escaping vapor is not restricted in any manner. For flammable hazardous materials, the escaping vapor must be directed away from the shell in such a manner that it cannot impinge upon the shell. For refrigerated liquefied gases, the escaping vapor must be directed away from the tank and in such a manner that it cannot impinge upon the tank. Protective devices which deflect the flow of vapor are permissible provided the required relief-device capacity is not reduced.

(ii) Provisions must be implemented to prevent unauthorized persons from access to the pressure relief devices and to protect the devices from damage

caused by the portable tank overturning.

(g) *Gauging devices.* Unless a portable tank is intended to be filled by weight, it must be equipped with one or more gauging devices. Glass level-gauges and gauges made of other fragile material, which are in direct communication with the contents of the tank are prohibited. A connection for a vacuum gauge must be provided in the jacket of a vacuum-insulated portable tank.

(h) *Portable tank supports, frameworks, lifting and tie-down attachments.* (1) Portable tanks must be designed and constructed with a support structure to provide a secure base during transport. The forces and safety factors specified in paragraphs (c)(1) and (c)(2) of this section, respectively, must be taken into account in this aspect of the design. Skids, frameworks, cradles or other similar structures are acceptable.

(2) The combined stresses caused by portable tank mountings (for example, cradles, framework, etc.) and portable tank lifting and tie-down attachments must not cause stress that would damage the shell in a manner that would compromise its lading retention capability. Permanent lifting and tie-down attachments must be fitted to all portable tanks. Preferably they should be fitted to the portable tank supports but may be secured to reinforcing plates located on the shell at the points of support. Each portable tank must be designed so that the center of gravity of the filled tank is approximately centered within the points of attachment for lifting devices.

(3) In the design of supports and frameworks, the effects of environmental corrosion must be taken into account.

(4) Forklift pockets must be capable of being closed off. The means of closing forklift pockets must be a permanent part of the framework or permanently attached to the framework. Single compartment portable tanks with a length less than 3.65 m (12 ft.) need not have forklift pockets that are capable of being closed off provided that:

(i) The shell, including all the fittings, are well protected from being hit by the forklift blades; and

(ii) The distance between forklift pockets (measured from the center of each pocket) is at least half of the maximum length of the portable tank.

(5) During transport, portable tanks must be adequately protected against damage to the shell, and service equipment resulting from lateral and longitudinal impact and overturning, or the shell and service equipment must be constructed to withstand the forces resulting from impact or overturning. External fittings must be protected so as to preclude the release of the shell contents upon impact or overturning of the portable tank on its fittings. Examples of protection include:

(i) Protection against lateral impact which may consist of longitudinal bars protecting the shell on both sides at the level of the median line;

(ii) Protection of the portable tank against overturning which may consist of reinforcement rings or bars fixed across the frame;

(iii) Protection against rear impact which may consist of a bumper or frame;

(iv) Protection of the shell against damage from impact or overturning by use of an ISO frame in accordance with ISO 1496–3 (IBR, see §171.7 of this subchapter); and

(v) Protection of the portable tank from impact or damage that may result from overturning by an insulation jacket.

(i) *Marking.* (1) Every portable tank must be fitted with a corrosion resistant metal plate permanently attached to the portable tank in a conspicuous place and readily accessible for inspection. When the plate cannot be permanently attached to the shell, the shell must be marked with at least the information required by Section VIII of the ASME Code. At a minimum, the following information must be marked on the plate by stamping or by any other equivalent method:

Country of manufacture
U N
Approval Country
Approval Number
Alternative Arrangements (see §178.274(a)(2)) ''AA''
Manufacturer's name or mark
Manufacturer's serial number
Approval Agency (Authorized body for the design approval)

Owner's registration number
Year of manufacture
Pressure vessel code to which the shell is designed
Test pressure_____bar gauge.
MAWP_____bar gauge.
External design pressure (not required for portable tanks used for refrigerated liquefied gases)_____bar gauge.
Design temperature range_____ °C to_____ °C. (For portable tanks used for refrigerated liquefied gases, the minimum design temperature must be marked.)
Water capacity at 20 °C/_____liters.
Water capacity of each compartment at 20 °C_____liters.
Initial pressure test date and witness identification.
MAWP for heating/cooling system_____bar gauge.
Shell material(s) and material standard reference(s).
Equivalent thickness in reference steel_____mm.
Lining material (when applicable).
Date and type of most recent periodic test(s).
Month_____Year_____ Test pressure_____bar gauge.
Stamp of approval agency that performed or witnessed the most recent test.

For portable tanks used for refrigerated liquefied gases:

Either ''thermally insulated'' or ''vacuum insulated''_____.
Effectiveness of the insulation system (heat influx)_____Watts (W).
Reference holding time_____days or hours and initial pressure_____bar/kPa gauge and degree of filling_____in kg for each refrigerated liquefied gas permitted for transportation.

(2) The following information must be marked either on the portable tank itself or on a metal plate firmly secured to the portable tank:

Name of the operator.
Name of hazardous materials being transported and maximum mean bulk temperature (except for refrigerated liquefied gases, the name and temperature are only required when the maximum mean bulk temperature is higher than 50 °C).
Maximum permissible gross mass (MPGM)_____kg.
Unladen (tare) mass_____kg.

NOTE TO PARAGRAPH (i)(2): For the identification of the hazardous materials being transported refer to part 172 of this subchapter.

(3) If a portable tank is designed and approved for open seas operations, such as offshore oil exploration, in accordance with the IMDG Code, the words ''OFFSHORE PORTABLE TANK'' must be marked on the identification plate.

(j) *Initial inspection and test.* The initial inspection and test of a portable tank must include the following:

(1) A check of the design characteristics.

(2) An internal and external examination of the portable tank and its fittings, taking into account the hazardous materials to be transported. For UN portable tanks used for refrigerated liquefied gases, a pressure test using an inert gas may be conducted instead of a hydrostatic test. An internal inspection is not required for a portable tank used for the dedicated transportation of refrigerated liquefied gases that are not filled with an inspection opening.

(3) A pressure test as specified in paragraph (i) of this section.

(4) A leakage test.

(5) A test of the satisfactory operation of all service equipment including pressure relief devices must also be performed. When the shell and its fittings have been pressure-tested separately, they must be subjected to a leakage test after reassembly. All welds, subject to full stress level in the shell, must be inspected during the initial test by radiographic, ultrasonic, or another suitable non-destructive test method. This does not apply to the jacket.

(6) Effective January 1, 2008, each new UN portable tank design type meeting the definition of ''container'' in the Convention for Safe Containers (CSC) (see 49 CFR 450.3(a)(2)) must be subjected to the dynamic longitudinal impact test prescribed in Part IV, Section 40 of the UN Manual of Tests and Criteria (see IBR, §171.7 of this subchapter). A UN portable tank design type impact-tested prior to January 1, 2008, in accordance with the requirements of this section in effect on October 1, 2005, need not be retested. UN portable tanks used for the dedicated transportation of ''Helium, refrigerated liquid,'' UN1963, and ''Hydrogen, refrigerated liquid,'' UN1966, that are marked ''NOT FOR RAIL TRANSPORT'' in letters of a minimum height of 10 cm (4 inches) on at least two sides of the portable tank are excepted from the dynamic longitudinal impact test.

(7) The following tests must be completed on a portable tank or a series of portable tanks designed and constructed to a single design type that is also a CSC container without leakage or deformation that would render the portable tank unsafe for transportation and use:

(i) *Longitudinal inertia.* The portable tank loaded to its maximum gross weight must be positioned with its longitudinal axis vertical. It shall be held in this position for five minutes by support at the lower end of the base structure providing vertical and lateral restraint and by support at the upper end of the base structure providing lateral restraint only.

(ii) *Lateral inertia.* The portable tank loaded to its maximum gross weight must be positioned for five minutes with its transverse axis vertical. It shall be held in this position for five minutes by support at the lower side of the base structure providing vertical and lateral restraint and by support at the upper side of the base structure providing lateral restraint only.

[66 FR 33440, June 21, 2001, as amended at 67 FR 15744, Apr. 3, 2002; 68 FR 45041, July 31, 2003; 68 FR 57633, Oct. 6, 2003; 68 FR 75751, Dec. 31, 2003; 69 FR 76185, Dec. 20, 2004; 70 FR 34399, June 14, 2005; 71 FR 78634, Dec. 29, 2006; 72 FR 55696, Oct. 1, 2007; 73 FR 4719, Jan. 28, 2008; 78 FR 1096, Jan. 7, 2013]

EDITORIAL NOTE: At 68 FR 57633, Oct. 6, 2003, §178.274 was amended in paragraph (b)(1); however, the amendment could not be incorporated due to inaccurate amendatory instruction.

§ 178.275 Specification for UN Portable Tanks intended for the transportation of liquid and solid hazardous materials.

(a) In addition to the requirements of §178.274, this section sets forth definitions and requirements that apply to UN portable tanks intended for the transportation of liquid and solid hazardous materials.

(b) *Definitions and requirements*—(1) *Design pressure* means the pressure to be used in calculations required by the recognized pressure vessel code. The design pressure must not be less than the highest of the following pressures:

(i) The maximum effective gauge pressure allowed in the shell during filling or discharge; or

(ii) The sum of—

(A) The absolute vapor pressure (in bar) of the hazardous material at 65 °C, minus 1 bar (149 °F, minus 100 kPa);

(B) The partial pressure (in bar) of air or other gases in the ullage space, resulting from their compression during filling without pressure relief by a maximum ullage temperature of 65 °C (149 °F) and a liquid expansion due to an increase in mean bulk temperature of 35 °C (95 °F); and

(C) A head pressure determined on the basis of the forces specified in §178.274(c) of this subchapter, but not less than 0.35 bar (35 kPa).

(2) *Maximum allowable working pressure (MAWP)* means a pressure that must not be less than the highest of the following pressures measured at the top of the shell while in operating position:

(i) The maximum effective gauge pressure allowed in the shell during filling or discharge; or

(ii) The maximum effective gauge pressure to which the shell is designed which must be not less than the design pressure.

(c) *Service equipment.* (1) In addition to the requirements specified in §178.274, for service equipment, all openings in the shell, intended for filling or discharging the portable tank must be fitted with a manually operated stop-valve located as close to the shell as reasonably practicable. Other openings, except for openings leading to venting or pressure relief devices, must be equipped with either a stop-valve or another suitable means of closure located as close to the shell as reasonably practicable.

(2) All portable tanks must be fitted with a manhole or other inspection openings of a suitable size to allow for internal inspection and adequate access for maintenance and repair of the interior. Compartmented portable tanks must have a manhole or other inspection openings for each compartment.

(3) For insulated portable tanks, top fittings must be surrounded by a spill collection reservoir with suitable drains.

(4) Piping must be designed, constructed and installed to avoid the risk of damage due to thermal expansion

and contraction, mechanical shock and vibration. All piping must be of a suitable metallic material. Welded pipe joints must be used wherever possible.

(d) *Bottom openings.* (1) Certain hazardous materials may not be transported in portable tanks with bottom openings. When the applicable T code or portable tank special provision, as referenced for materials in the §172.101 Table of this subchapter, specifies that bottom openings are prohibited, there must be no openings below the liquid level of the shell when it is filled to its maximum permissible filling limit. When an existing opening is closed, it must be accomplished by internally and externally welding one plate to the shell.

(2) Bottom discharge outlets for portable tanks carrying certain solid, crystallizable or highly viscous hazardous materials must be equipped with at least two serially fitted and mutually independent shut-off devices. Use of only two shut-off devices is only authorized when this paragraph is referenced in the applicable T Code indicated for each hazardous material in the §172.101 Table of this subchapter. The design of the equipment must be to the satisfaction of the approval agency and must include:

(i) An external stop-valve fitted as close to the shell as reasonably practicable; and

(ii) A liquid tight closure at the end of the discharge pipe, which may be a bolted blank flange or a screw cap.

(3) Except as provided in paragraph (d)(2) of this section, every bottom discharge outlet must be equipped with three serially fitted and mutually independent shut-off devices. The design of the equipment must include:

(i) A self-closing internal stop-valve, which is a stop-valve within the shell or within a welded flange or its companion flange, such that:

(A) The control devices for the operation of the valve are designed to prevent any unintended opening through impact or other inadvertent act;

(B) The valve is operable from above or below;

(C) If possible, the setting of the valve (open or closed) must be capable of being verified from the ground;

(D) Except for portable tanks having a capacity less than 1,000 liters (264.2 gallons), it must be possible to close the valve from an accessible position on the portable tank that is remote from the valve itself within 30 seconds of actuation; and

(E) The valve must continue to be effective in the event of damage to the external device for controlling the operation of the valve;

(ii) An external stop-valve fitted as close to the shell as reasonably practicable;

(iii) A liquid tight closure at the end of the discharge pipe, which may be a bolted blank flange or a screw cap; and

(iv) For UN portable tanks, with bottom outlets, used for the transportation of liquid hazardous materials that are Class 3, PG I or II, or PG III with a flash point of less than 100 °F (38 °C); Division 5.1, PG I or II; or Division 6.1, PG I or II, the remote means of closure must be capable of thermal activation. The thermal means of activation must activate at a temperature of not more than 250 °F (121 °C).

(e) *Pressure relief devices.* All portable tanks must be fitted with at least one pressure relief device. All relief devices must be designed, constructed and marked in accordance with the requirements of this subchapter.

(f) *Vacuum-relief devices.* (1) A shell which is to be equipped with a vacuum-relief device must be designed to withstand, without permanent deformation, an external pressure of not less than 0.21 bar (21.0 kPa). The vacuum-relief device must be set to relieve at a vacuum setting not greater than –0.21 bar (–21.0 kPa) unless the shell is designed for a higher external over pressure, in which case the vacuum-relief pressure of the device to be fitted must not be greater than the tank design vacuum pressure. A shell that is not fitted with a vacuum-relief device must be designed to withstand, without permanent deformation, an external pressure of not less than 0.4 bar (40.0 kPa).

(2) Vacuum-relief devices used on portable tanks intended for the transportation of hazardous materials meeting the criteria of Class 3, including elevated temperature hazardous materials transported at or above their

flash point, must prevent the immediate passage of flame into the shell or the portable tank must have a shell capable of withstanding, without leakage, an internal explosion resulting from the passage of flame into the shell.

(g) *Pressure relief devices.* (1) Each portable tank with a capacity not less than 1,900 liters (501.9 gallons) and every independent compartment of a portable tank with a similar capacity, must be provided with one or more pressure relief devices of the reclosing type. Such portable tanks may, in addition, have a frangible disc or fusible element in parallel with the reclosing devices, except when the applicable T code assigned to a hazardous material requires that the frangible disc precede the pressure relief device, according to paragraph (g)(3) of this section, or when no bottom openings are allowed. The pressure relief devices must have sufficient capacity to prevent rupture of the shell due to over pressurization or vacuum resulting from filling, discharging, heating of the contents or fire.

(2) Pressure relief devices must be designed to prevent the entry of foreign matter, the leakage of liquid and the development of any dangerous excess pressure.

(3) When required for certain hazardous materials by the applicable T code or portable tank special provision specified for a hazardous material in the §172.101 Table of this subchapter, portable tanks must have a pressure relief device consistent with the requirements of this subchapter. Except for a portable tank in dedicated service that is fitted with an approved relief device constructed of materials compatible with the hazardous material, the relief device system must include a frangible disc preceding (such as, between the lading and the reclosing pressure relief device) a reclosing pressure relief device. A pressure gauge or suitable tell-tale indicator for the detection of disc rupture, pin-holing or leakage must be provided in the space between the frangible disc and the pressure relief device to allow the portable tank operator to check to determine if the disc is leak free. The frangible disc must rupture at a nominal pressure 10% above the start-to-discharge pressure of the reclosable pressure relief device.

(4) Every portable tank with a capacity less than 1,900 liters (501.9 gallons) must be fitted with a pressure relief device which, except as provided in paragraph (g)(3) of this section, may be a frangible disc when this disc is set to rupture at a nominal pressure equal to the test pressure at any temperature within the design temperature range.

(5) When the shell is fitted for pressure discharge, a suitable pressure relief device must provide the inlet line to the portable tank and set to operate at a pressure not higher than the MAWP of the shell, and a stop-valve must be fitted as close to the shell as practicable to minimize the potential for damage.

(6) *Setting of pressure relief devices.* (i) Pressure relief devices must operate only in conditions of excessive rise in temperature. The shell must not be subject to undue fluctuations of pressure during normal conditions of transportation.

(ii) The required pressure relief device must be set to start to discharge at a nominal pressure of five-sixths of the test pressure for shells having a test pressure of not more than 4.5 bar (450 kPa) and 110% of two-thirds of the test pressure for shells having a test pressure of more than 4.5 bar (450 kPa). A self-closing relief device must close at a pressure not more than 10% below the pressure at which the discharge starts. The device must remain closed at all lower pressures. This requirement does not prevent the use of vacuum-relief or combination pressure relief and vacuum-relief devices.

(h) *Fusible elements.* Fusible elements must operate at a temperature between 110 °C (230 °F) and 149 °C (300.2 °F), provided that the pressure in the shell at the fusing temperature will not exceed the test pressure. They must be placed at the top of the shell with their inlets in the vapor space and in no case may they be shielded from external heat. Fusible elements must not be utilized on portable tanks with a test pressure which exceeds 2.65 bar (265.0 kPa); however, fusible elements are authorized

on portable tanks for the transportation of certain organometallic materials in accordance with §172.102, special provision TP36 of this subchapter. Fusible elements used on portable tanks intended for the transport of elevated temperature hazardous materials must be designed to operate at a temperature higher than the maximum temperature that will be experienced during transport and must be designed to the satisfaction of the approval agency.

(i) *Capacity of pressure relief devices.* (1) The reclosing pressure relief device required by paragraph (g)(1) of this section must have a minimum cross sectional flow area equivalent to an orifice of 31.75 mm (1.3 inches) diameter. Vacuum-relief devices, when used, must have a cross sectional flow area not less than 284 mm^2 (11.2 $inches^2$).

(2) The combined delivery capacity of the pressure relief system (taking into account the reduction of the flow when the portable tank is fitted with frangible-discs preceding spring-loaded pressure-relief devices or when the spring-loaded pressure-relief devices are provided with a device to prevent the passage of the flame), in condition of complete fire engulfment of the portable tank must be sufficient to limit the pressure in the shell to 20% above the start to discharge pressure limiting device (pressure relief device). The total required capacity of the relief devices may be determined using the formula in paragraph (i)(2)(i)(A) of this section or the table in paragraph (i)(2)(iii) of this section.

(i)(A) To determine the total required capacity of the relief devices, which must be regarded as being the sum of the individual capacities of all the contributing devices, the following formula must be used:

$$Q = 12.4\,\frac{FA^{0.82}}{LC}\sqrt{\frac{ZT}{M}}$$

Where:

Q = minimum required rate of discharge in cubic meters of air per second (m^3/s) at conditions: 1 bar and 0 °C (273 °K);

F = for uninsulated shells: 1; for insulated shells: U(649 − t)/13.6 but in no case is less than 0.25

Where:

U = thermal conductance of the insulation, in $kW\ m^{-2}K^{-1}$, at 38 °C (100 °F); and t = actual temperature of the hazardous material during filling (in °C) or when this temperature is unknown, let t = 15 °C (59 °F). The value of F given in this paragraph (i)(2)(i)(A) for insulated shells may only be used if the insulation is in conformance with paragraph (i)(2)(iv) of this section;

A = total external surface area of shell in square meters;

Z = the gas compressibility factor in the accumulating condition (when this factor is unknown, let Z equal 1.0);

T = absolute temperature in Kelvin (°C+273) above the pressure relief devices in the accumulating condition;

L = the latent heat of vaporization of the liquid, in kJ/kg, in the accumulating condition;

M = molecular weight of the hazardous material.

(B) The constant C, as shown in the formula in paragraph (i)(2)(i)(A) of this section, is derived from one of the following formulas as a function of the ratio k of specific heats:

$$k = \frac{c_p}{c_v}$$

Where:

c_p is the specific heat at constant pressure; and

c_v is the specific heat at constant volume.

(C) When k >1:

$$C = \sqrt{k\left(\frac{2}{k+1}\right)^{\frac{k+1}{k-1}}}$$

(D) When k = 1 or k is unknown, a value of 0.607 may be used for the constant C. C may also be taken from the following table:

C CONSTANT VALUE TABLE

k	C
1.00	0.607
1.02	0.611
1.04	0.615
1.06	0.620
1.08	0.624
1.10	0.628
1.12	0.633
1.14	0.637
1.16	0.641
1.18	0.645
1.20	0.649
1.22	0.652
1.24	0.656
1.26	0.660

C CONSTANT VALUE TABLE—Continued

k	C
1.28	0.664
1.30	0.667
1.32	0.671
1.34	0.674
1.36	0.678
1.38	0.681
1.40	0.685
1.42	0.688
1.44	0.691
1.46	0.695
1.48	0.698
1.50	0.701
1.52	0.704
1.54	0.707
1.56	0.710
1.58	0.713
1.60	0.716
1.62	0.719
1.64	0.722
1.66	0.725
1.68	0.728
1.70	0.731
2.00	0.770
2.20	0.793

(ii) As an alternative to the formula in paragraph (i)(2)(i)(A) of this section, relief devices for shells used for transporting liquids may be sized in accordance with the table in paragraph (i)(2)(iii) of this section. The table in paragraph (i)(2)(iii) of this section assumes an insulation value of F = 1 and must be adjusted accordingly when the shell is insulated. Other values used in determining the table in paragraph (i)(2)(iii) of this section are: L = 334.94 kJ/kg; M = 86.7; T = 394 °K; Z = 1; and C = 0.607.

(iii) Minimum emergency vent capacity, Q, in cubic meters of air per second at 1 bar and 0 °C (273 °K) shown in the following table:

MINIMUM EMERGENCY VENT CAPACITY

[Q Values]

A Exposed area (square meters)	Q (Cubic meters of air per second)	A Exposed area (square meters)	Q (Cubic meters of air per second)
2	0.230	37.5	2.539
3	0.320	40	2.677
4	0.405	42.5	2.814
5	0.487	45	2.949
6	0.565	47.5	3.082
7	0.641	50	3.215
8	0.715	52.5	3.346
9	0.788	55	3.476
10	0.859	57.5	3.605
12	0.998	60	3.733
14	1.132	62.5	3.860
16	1.263	65	3.987
18	1.391	67.5	4.112
20	1.517	70	4.236

MINIMUM EMERGENCY VENT CAPACITY—Continued

[Q Values]

A Exposed area (square meters)	Q (Cubic meters of air per second)	A Exposed area (square meters)	Q (Cubic meters of air per second)
22.5	1.670	75	4.483
25	1.821	80	4.726
27.5	1.969	85	4.967
30	2.115	90	5.206
32.5	2.258	95	5.442
35	2.400	100	5.676

(iv) Insulation systems, used for the purpose of reducing venting capacity, must be specifically approved by the approval agency. In all cases, insulation systems approved for this purpose must—

(A) Remain effective at all temperatures up to 649 °C (1200 °F); and

(B) Be jacketed with a material having a melting point of 700 °C (1292 °F) or greater.

(j) *Approval, inspection and testing.* Approval procedures for UN portable tanks are specified in § 178.273. Inspection and testing requirements are specified in § 180.605 of this subchapter.

[66 FR 33445, June 21, 2001, as amended at 68 FR 32414, May 30, 2003; 69 FR 76185, Dec. 20, 2004; 73 FR 57006, Oct. 1, 2008; 76 FR 3388, Jan. 19, 2011]

§ 178.276 Requirements for the design, construction, inspection and testing of portable tanks intended for the transportation of non-refrigerated liquefied compressed gases.

(a) In addition to the requirements of § 178.274 applicable to UN portable tanks, the following requirements apply to UN portable tanks used for non-refrigerated liquefied compressed gases. In addition to the definitions in § 178.274, the following definitions apply:

(1) *Design pressure* means the pressure to be used in calculations required by the ASME Code, Section VIII (IBR, see § 171.7 of this subchapter). The design pressure must be not less than the highest of the following pressures:

(i) The maximum effective gauge pressure allowed in the shell during filling or discharge; or

(ii) The sum of:

(A) The maximum effective gauge pressure to which the shell is designed

as defined in this paragraph under ''MAWP''; and

(B) A head pressure determined on the basis of the dynamic forces specified in paragraph (h) of this section, but not less than 0.35 bar (35 kPa).

(2) *Design reference temperature* means the temperature at which the vapor pressure of the contents is determined for the purpose of calculating the MAWP. The value for each portable tank type is as follows:

(i) Shell with a diameter of 1.5 meters (4.9 ft.) or less: 65 °C (149 °F); or

(ii) Shell with a diameter of more than 1.5 meters (4.9 ft.):

(A) Without insulation or sun shield: 60 °C (140 °F);

(B) With sun shield: 55 °C (131 °F); and

(C) With insulation: 50 °C (122 °F).

(3) *Filling density* means the average mass of liquefied compressed gas per liter of shell capacity (kg/l).

(4) *Maximum allowable working pressure (MAWP)* means a pressure that must be not less than the highest of the following pressures measured at the top of the shell while in operating position, but in no case less than 7 bar (700 kPa):

(i) The maximum effective gauge pressure allowed in the shell during filling or discharge; or

(ii) The maximum effective gauge pressure to which the shell is designed, which must be:

(A) Not less than the pressure specified for each liquefied compressed gas listed in the UN Portable Tank Table for Liquefied Compressed Gases in § 173.313; and

(B) Not less than the sum of:

(*1*) The absolute vapor pressure (in bar) of the liquefied compressed gas at the design reference temperature minus 1 bar; and

(*2*) The partial pressure (in bar) of air or other gases in the ullage space which is determined by the design reference temperature and the liquid phase expansion due to the increase of the mean bulk temperature of $t_r - t_f$ (t_f = filling temperature, usually 15 °C, t_r = 50 °C maximum mean bulk temperature).

(b) *General design and construction requirements.* (1) Shells must be of seamless or welded steel construction, or combination of both, and have a water capacity greater than 450 liters (118.9 gallons). Shells must be designed, constructed, certified and stamped in accordance with the ASME Code, Section VIII.

(2) Portable tanks must be postweld heat-treated and radiographed as prescribed in Section VIII of the ASME Code, except that each portable tank constructed in accordance with part UHT of the ASME Code must be postweld heat-treated. Where postweld heat treatment is required, the portable tank must be treated as a unit after completion of all the welds in and/or to the shell and heads. The method must be as prescribed in the ASME Code. Welded attachments to pads may be made after postweld heat treatment is made. A portable tank used for anhydrous ammonia must be postweld heat-treated. The postweld heat treatment must be as prescribed in the ASME Code, but in no event at less than 1050 °F tank metal temperature. Additionally, portable tanks constructed in accordance with part UHT of the ASME Code must conform to the following requirements:

(i) Welding procedure and welder performance tests must be made annually in accordance with Section IX of the ASME Code. In addition to the essential variables named therein, the following must be considered to be essential variables: number of passes, thickness of plate, heat input per pass, and manufacturer's identification of rod and flux. The number of passes, thickness of plate and heat input per pass may not vary more than 25 percent from the qualified procedure. Records of the qualification must be retained for at least 5 years by the portable tank manufacturer or his designated agent and, upon request, made available to a representative of the Department of Transportation or the owner of the tank.

(ii) Impact tests must be made on a lot basis. A lot is defined as 100 tons or less of the same heat and having a thickness variation no greater than plus or minus 25 percent. The minimum impact required for full-sized specimens shall be 20 foot-pounds (or 10 foot-pounds for half-sized specimens) at 0 °F (−17.8 °F) Charpy V-Notch in both

the longitudinal and transverse direction. If the lot test does not pass this requirement, individual plates may be accepted if they individually meet this impact requirement.

(3) When the shells intended for the transportation of non-refrigerated liquefied compressed gases are equipped with thermal insulation, a device must be provided to prevent any dangerous pressure from developing in the insulating layer in the event of a leak, when the protective covering is closed it must be gas tight. The thermal insulation must not inhibit access to the fittings and discharge devices. In addition, the thermal insulation systems must satisfy the following requirements:

(i) consist of a shield covering not less than the upper third, but not more than the upper half of the surface of the shell, and separated from the shell by an air space of approximately 40 mm (1.7 inches) across; or

(ii) consist of a complete cladding of insulating materials. The insulation must be of adequate thickness and constructed to prevent the ingress of moisture and damage to the insulation. The insulation and cladding must have a thermal conductance of not more than 0.67 ($W \cdot m^{-2} \cdot K^{-1}$) under normal conditions of transportation.

(c) *Service equipment.* (1) Each opening with a diameter of more than 1.5 mm (0.1 inch) in the shell of a portable tank, except openings for pressure-relief devices, inspection openings and closed bleed holes, must be fitted with at least three mutually independent shut-off devices in series: the first being an internal stop-valve, excess flow valve, integral excess flow valve, or excess flow feature (see §178.337–1(g)), the second being an external stop-valve and the third being a blank flange, thread cap, plug or equivalent tight liquid closure device.

(2) When a portable tank is fitted with an excess flow valve, the excess flow valve must be so fitted that its seating is inside the shell or inside a welded flange or, when fitted externally, its mountings must be designed so that in the event of impact it maintains its effectiveness. The excess flow valves must be selected and fitted so as to close automatically when the rated flow, specified by the manufacturer, is reached. Connections and accessories leading to or from such a valve must have a capacity for a flow more than the excess flow valve's rated flow.

(3) For filling and discharge openings that are located below the liquid level, the first shut-off device must be an internal stop-valve and the second must be a stop-valve placed in an accessible position on each discharge and filling pipe.

(4) For filling and discharge openings located below the liquid level of portable tanks intended for the transportation of flammable and/or toxic liquefied compressed gases, the internal stop-valve must be a self-closing safety device that fully closes automatically during filling or discharge in the event of fire engulfment. The device shall fully close within 30 seconds of actuation and the thermal means of closure must actuate at a temperature of not more than 121 °C (250 °F). Except for portable tanks having a capacity less than 1,000 liters (264.2 gallons), this device must be operable by remote control.

(5) In addition to filling, discharge and gas pressure equalizing orifices, shells may have openings in which gauges, thermometers and manometers can be fitted. Connections for such instruments must be made by suitable welded nozzles or pockets and may not be connected by screwed connections through the shell.

(6) All portable tanks must be fitted with manholes or other inspection openings of suitable size to allow for internal inspection and adequate access for maintenance and repair of the interior.

(7) *Inlets and discharge outlets on chlorine portable tanks.* The inlet and discharge outlets on portable tanks used to transport chlorine must meet the requirements of §178.337–1(c)(2) and must be fitted with an internal excess flow valve. In addition to the internal excess flow valve, the inlet and discharge outlets must be equipped with an external stop valve (angle valve). Excess flow valves must conform to the standards of The Chlorine Institute, Inc. (IBR, see §171.7 of this subchapter) as follows:

(i) A valve conforming to Drawing 101–7, dated July 1993, must be installed under each liquid angle valve.

(ii) A valve conforming to Drawing 106–6, dated July 1993, must be installed under each gas angle valve. For portable tanks used to transport non-refrigerated liquefied gases.

(8) External fittings must be grouped together as close as reasonably practicable. The following openings may be installed at locations other than on the top or end of the tank:

(i) The openings for liquid level gauging devices, pressure gauges, or for safety devices, may be installed separately at the other location or in the side of the shell;

(ii) One plugged opening of 2-inch National Pipe Thread or less provided for maintenance purposes may be located elsewhere;

(iii) An opening of 3-inch National Pipe Size or less may be provided at another location, when necessary, to facilitate installation of condensing coils.

(9) Filling and discharge connections are not required to be grouped and may be installed below the normal liquid level of the tank if:

(i) The portable tank is permanently mounted in a full framework for containerized transport;

(ii) For each portable tank design, a prototype portable tank, meets the requirements of parts 450 through 453 of this title for compliance with the requirements of Annex II of the International Convention for Safe Containers; and

(iii) Each filling and discharge outlet meets the requirements of paragraph (c)(4) of this section.

(d) *Bottom openings.* Bottom openings are prohibited on portable tanks when the UN Portable Tank Table for Liquefied Compressed Gases in §173.313 of this subchapter indicates that bottom openings are not allowed. In this case, there may be no openings located below the liquid level of the shell when it is filled to its maximum permissible filling limit.

(e) *Pressure relief devices.* (1) Portable tanks must be provided with one or more reclosing pressure relief devices. The pressure relief devices must open automatically at a pressure not less than the MAWP and be fully open at a pressure equal to 110% of the MAWP. These devices must, after discharge, close at a pressure not less than 10% below the pressure at which discharge starts and must remain closed at all lower pressures. The pressure relief devices must be of a type that will resist dynamic forces including liquid surge. A frangible disc may only be used in series with a reclosing pressure relief device.

(2) Pressure relief devices must be designed to prevent the entry of foreign matter, the leakage of gas and the development of any dangerous excess pressure.

(3) A portable tank intended for the transportation of certain liquefied compressed gases identified in the UN Portable Tank Table for Liquefied Compressed Gases in §173.313 of this subchapter must have a pressure relief device which conforms to the requirements of this subchapter. Unless a portable tank, in dedicated service, is fitted with a relief device constructed of materials compatible with the hazardous material, the relief device must be comprised of a frangible disc preceded by a reclosing device. The space between the frangible disc and the device must be provided with a pressure gauge or a suitable tell-tale indicator. This arrangement must facilitate the detection of disc rupture, pinholing or leakage which could cause a malfunction of the pressure relief device. The frangible disc must rupture at a nominal pressure 10% above the start-to-discharge pressure of the relief device.

(4) In the case of portable tanks used for more than one gas, the pressure relief devices must open at a pressure indicated in paragraph (e)(1) of this section for the gas having the highest maximum allowable pressure of the gases allowed to be transported in the portable tank.

(f) *Capacity of relief devices.* The combined delivery capacity of the relief devices must be sufficient so that, in the event of total fire engulfment, the pressure inside the shell cannot exceed 120% of the MAWP. Reclosing relief devices must be used to achieve the full relief capacity prescribed. In the case of portable tanks used for more than gas, the combined delivery capacity of

the pressure relief devices must be taken for the liquefied compressed gas which requires the highest delivery capacity of the liquefied compressed gases allowed to be transported in the portable tank. The total required capacity of the relief devices must be determined according to the requirements in § 178.275(i). These requirements apply only to liquefied compressed gases which have critical temperatures well above the temperature at the accumulating condition. For gases that have critical temperatures near or below the temperature at the accumulating condition, the calculation of the pressure relief device delivery capacity must consider the additional thermodynamic properties of the gas, for example see CGA S–1.2 (IBR, see § 171.7 of this subchapter).

[66 FR 33448, June 21, 2001, as amended at 68 FR 75748, 75752, Dec. 31, 2003; 69 FR 54046, Sept. 7, 2004; 69 FR 76185, Dec. 20, 2004]

§ 178.277 Requirements for the design, construction, inspection and testing of portable tanks intended for the transportation of refrigerated liquefied gases.

(a) In addition to the requirements of § 178.274 applicable to UN portable tanks, the following requirements and definitions apply to UN portable tanks used for refrigerated liquefied gases:

Design pressure For the purpose of this section the term ''design pressure'' is consistent with the definition for design pressure in the ASME Code, Section VIII (IBR, see § 171.7 of this subchapter).

Holding time is the time, as determined by testing, that will elapse from loading until the pressure of the contents, under equilibrium conditions, reaches the lowest set pressure of the pressure limiting device(s) (for example, pressure control valve or pressure relief device). Holding time must be determined as specified in § 178.338–9.

Maximum allowable working pressure (MAWP) means the maximum effective gauge pressure permissible at the top of the shell of a loaded portable tank in its operating position including the highest effective pressure during filling and discharge;

Minimum design temperature means the temperature which is used for the design and construction of the shell not higher than the lowest (coldest) service temperature of the contents during normal conditions of filling, discharge and transportation.

Shell means the part of the portable tank which retains the refrigerated liquefied gas intended for transport, including openings and their closures, but does not include service equipment or external structural equipment.

Tank means a construction which normally consists of either:

(1) A jacket and one or more inner shells where the space between the shell(s) and the jacket is exhausted of air (vacuum insulation) and may incorporate a thermal insulation system; or

(2) A jacket and an inner shell with an intermediate layer of solid thermally insulating material (for example, solid foam).

(b) *General design and construction requirements.* (1) Portable tanks must be of seamless or welded steel construction and have a water capacity of more than 450 liters (118.9 gallons). Portable tanks must be designed, constructed, certified and stamped in accordance with Section VIII of the ASME Code.

(2) Portable tanks must be postweld heat treated and radiographed as prescribed in Sections V and VIII of the ASME Code except that each tank constructed in accordance with part UHT in Section VIII of the ASME Code must be postweld heat treated. Where postweld heat treatment is required, the tank must be treated as a unit after completion of all the welds to the shell and heads. The method must be as prescribed in the ASME Code. Welded attachments to pads may be made after postweld heat treatment is made. The postweld heat treatment must be as prescribed in Section VIII of the ASME Code, but in no event at less than 1,050 °F tank metal temperature.

(3) Welding procedure and welder performance tests must be made annually in accordance with Section IX of the ASME Code (IBR, see § 171.7 of this subchapter). In addition to the essential variables named in the ASME Code, the following must be considered as essential variables: number of passes, thickness of plate, heat input per pass, and the specified rod and flux. The number of passes, thickness of plate and heat

input per pass may not vary more than 25% from the procedure qualification. Records of the qualification must be retained for at least 5 years by the portable tank manufacturer and made available to the approval agency and the owner of the portable tank as specified in § 178.273.

(4) Shells and jackets must be made of metallic materials suitable for forming. Jackets must be made of steel. Non-metallic materials may be used for the attachments and supports between the shell and jacket, provided their material properties at the minimum design temperature are proven to be sufficient. In choosing the material, the minimum design temperature must be taken into account with respect to risk of brittle fracture, to hydrogen embrittlement, to stress corrosion cracking and to resistance to impact.

(5) Any part of a portable tank, including fittings, gaskets and pipework, which can be expected normally to come into contact with the refrigerated liquefied gas transported must be compatible with that refrigerated liquefied gas.

(6) The thermal insulation system must include a complete covering of the shell with effective insulating materials. External insulation must be protected by a jacket so as to prevent the ingress of moisture and other damage under normal transport conditions.

(7) When a jacket is so closed as to be gas-tight, a device must be provided to prevent any dangerous pressure from developing in the insulation space.

(8) Materials which may react with oxygen or oxygen enriched atmospheres in a dangerous manner may not be used in portable tanks intended for the transport of refrigerated liquefied gases having a boiling point below minus 182 °C at atmospheric pressure in locations with the thermal insulation where there is a risk of contact with oxygen or with oxygen enriched fluid.

(9) Insulating materials must not deteriorate to an extent that the effectiveness of the insulation system, as determined in accordance with paragraph (b)(11) of this section, would be reduced in service.

(10) A reference holding time must be determined for each refrigerated liquefied gas intended for transport in a portable tank. The reference holding time must be determined by testing in accordance with the requirements of § 178.338–9, considering the following factors:

(i) The effectiveness of the insulation system, determined in accordance with paragraph (b)(11) of this section;

(ii) The lowest set pressure of the pressure limiting device;

(iii) The initial filling conditions;

(iv) An assumed ambient temperature of 30 °C (86 °F);

(v) The physical properties of the individual refrigerated liquefied gas intended to be transported.

(11) The effectiveness of the insulation system (heat influx in watts) may be determined by type testing the portable tank in accordance with a procedure specified in § 178.338–9(c) or by using the holding time test in § 178.338–9(b). This test must consist of either:

(i) A constant pressure test (for example, at atmospheric pressure) when the loss of refrigerated liquefied gas is measured over a period of time; or

(ii) A closed system test when the rise in pressure in the shell is measured over a period of time.

(12) When performing the constant pressure test, variations in atmospheric pressure must be taken into account. When performing either test, corrections must be made for any variation of the ambient temperature from the assumed ambient temperature reference value of 30 °C (86 °F).

(13) The jacket of a vacuum-insulated double-wall tank must have either an external design pressure not less than 100 kPa (1 bar) gauge pressure calculated in accordance with Section VIII of the ASME Code or a calculated critical collapsing pressure of not less than 200 kPa (2 bar) gauge pressure. Internal and external reinforcements may be included in calculating the ability of the jacket to resist the external pressure.

NOTE TO PARAGRAPH (b): For the determination of the actual holding time, as indicated by paragraphs (b)(10), (11), (12), and (13), before each journey, refer to § 178.338–9(b).

(c) *Design criteria.* For shells with vacuum insulation, the test pressure must not be less than 1.3 times the sum of the MAWP and 100 kPa (1 bar). In no case may the test pressure be less than 300 kPa (3 bar) gauge pressure.

(d) *Service equipment.* (1) Each filling and discharge opening in portable tanks used for the transport of flammable refrigerated liquefied gases must be fitted with at least three mutually independent shut-off devices in series: the first being a stop-valve situated as close as reasonably practicable to the jacket, the second being a stop-valve and the third being a blank flange or equivalent device. The shut-off device closest to the jacket must be a self-closing device, which is capable of being closed from an accessible position on the portable tank that is remote from the valve within 30 seconds of actuation. This device must actuate at a temperature of not more than 121 °C (250 °F).

(2) Each filling and discharge opening in portable tanks used for the transport of non-flammable refrigerated liquefied gases must be fitted with at least two mutually independent shut-off devices in series: the first being a stop-valve situated as close as reasonably practicable to the jacket and the second a blank flange or equivalent device.

(3) For sections of piping which can be closed at both ends and where liquid product can be trapped, a method of automatic pressure relief must be provided to prevent excess pressure build-up within the piping.

(4) Each filling and discharge opening on a portable tank must be clearly marked to indicate its function.

(5) When pressure-building units are used, the liquid and vapor connections to that unit must be provided with a valve as close to the jacket as reasonably practicable to prevent the loss of contents in case of damage to the pressure-building unit. A check valve may be used for this purpose if it is located on the vapor side of the pressure build-up coil.

(6) The materials of construction of valves and accessories must have satisfactory properties at the lowest operating temperature of the portable tank.

(7) Vacuum insulated portable tanks are not required to have an inspection opening.

(e) *Pressure relief devices.* (1) Every shell must be provided with not less than two independent reclosing pressure relief devices. The pressure relief devices must open automatically at a pressure not less than the MAWP and be fully open at a pressure equal to 110% of the MAWP. These devices must, after discharge, close at a pressure not lower than 10% below the pressure at which discharge starts and must remain closed at all lower pressures. The pressure relief devices must be of the type that will resist dynamic forces including surge.

(2) Except for portable tanks used for oxygen, portable tanks for non-flammable refrigerated liquefied gases (except oxygen) and hydrogen may in addition have frangible discs in parallel with the reclosing devices as specified in paragraphs (e)(4)(ii) and (e)(4)(iii) of this section.

(3) Pressure relief devices must be designed to prevent the entry of foreign matter, the leakage of gas and the development of any dangerous excess pressure.

(4) *Capacity and setting of pressure relief devices.* (i) In the case of the loss of vacuum in a vacuum-insulated tank or of loss of 20% of the insulation of a portable tank insulated with solid materials, the combined capacity of all pressure relief devices installed must be sufficient so that the pressure (including accumulation) inside the shell does not exceed 120% of the MAWP.

(ii) For non-flammable refrigerated liquefied gases (except oxygen) and hydrogen, this capacity may be achieved by the use of frangible discs in parallel with the required safety-relief devices. Frangible discs must rupture at nominal pressure equal to the test pressure of the shell.

(iii) Under the circumstances described in paragraphs (e)(4)(i) and (e)(4)(ii) of this section, together with complete fire engulfment, the combined capacity of all pressure relief devices installed must be sufficient to limit the pressure in the shell to the test pressure.

(iv) The required capacity of the relief devices must be calculated in accordance with CGA Pamphlet S–1.2 (IBR, see § 171.7 of this subchapter).

[66 FR 33450, June 21, 2001, as amended at 68 FR 75748, 75752, Dec. 31, 2003]

Subpart I [Reserved]

Subpart J—Specifications for Containers for Motor Vehicle Transportation

SOURCE: 29 FR 18975, Dec. 29, 1964, unless otherwise noted. Redesignated at 32 FR 5606, Apr. 5, 1967.

§ 178.318 Specification MC 201; container for detonators and percussion caps.

§ 178.318–1 Scope.

(a) This specification pertains to a container to be used for the transportation of detonators and percussion caps in connection with the transportation of liquid nitroglycerin, desensitized liquid nitroglycerin or diethylene glycol dinitrate, where any or all of such types of caps may be used for the detonation of liquid nitroglycerin, desentitized liquid nitroglycerin or diethylene glycol dinitrate in blasting operations. This specification is not intended to take the place of any shipping or packing requirements of this Department where the caps in question are themselves articles of commerce.

(b) [Reserved]

[29 FR 18975, Dec. 29, 1964. Redesignated at 32 FR 5606, Apr. 5, 1967, and amended by Amdt. 178–60, 44 FR 70733, Dec. 10, 1979]

§ 178.318–2 Container.

(a) Every container for detonators and percussion caps coming within the scope of this specification shall be constructed entirely of hard rubber, phenolresinous or other resinous material, or other nonmetallic, nonsparking material, except that metal parts may be used in such locations as not in any event to come in contact with any of the caps. Space shall be provided so that each detonator of whatever nature may be inserted in an individual cell in the body of the container, into which each such cap shall snugly fit. There shall be provided no more than twenty (20) such cellular spaces. Space may be provided into which a plurality of percussion caps may be carried, provided that such space may be closed with a screw cap, and further provided that each or any such space is entirely separate from any space provided for any detonator. Each cellular space into which a detonator is to be inserted and carried shall be capable of being covered by a rotary cover so arranged as to expose not more than one cell at any time, and capable of rotation to such a place that all cells will be covered at the same time, at which place means shall be provided to lock the cover in place. Means shall be provided to lock in place the cover for the cells provided for the carrying of detonators. The requirement that not more than one cell be exposed at one time need not apply in the case of detonators, although spaces for such caps and detonators shall be separate. Sufficient annular space shall be provided inside the cover for such detonators that, when the cover is closed, there will be sufficient space to accommodate the wires customarily attached to such caps. If the material is of such a nature as to require treatment to prevent the absorption of moisture, such treatment shall be applied as shall be necessary in order to provide against the penetration of water by permeation. A suitable carrying handle shall be provided, except for which handle no part of the container may project beyond the exterior of the body.

(b) Exhibited in plates I and II are line drawings of a container for detonators and percussion caps, illustrative of the requirements set forth in § 178.318–2(a). These plates shall not be construed as a part of this specification.

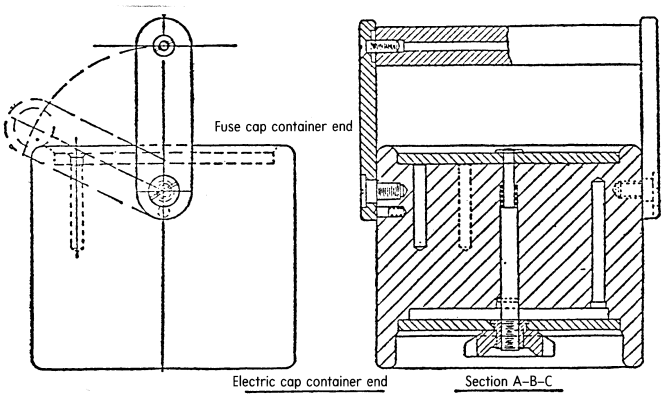

BLASTING CAP CONTAINER
PLATE I

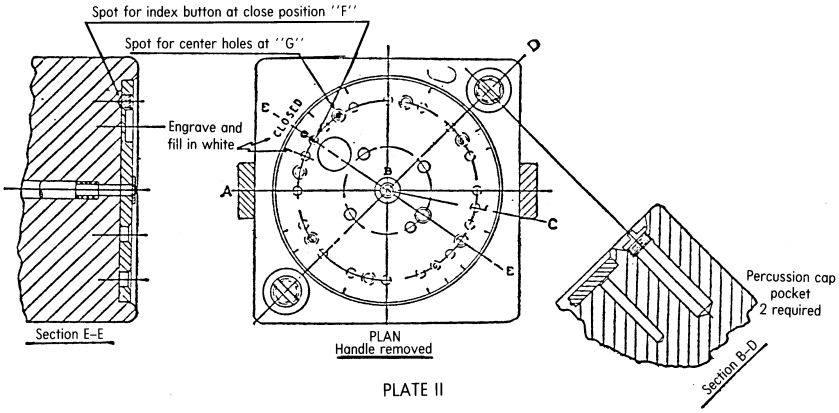

PLATE II

[29 FR 18975, Dec. 29, 1964. Redesignated at 32 FR 5606, Apr. 5, 1967, and amended by Amdt. 178–60, 44 FR 70733, Dec. 10, 1979]

§ 178.318–3 Marking.

Each container must be marked as prescribed in § 178.2(b).

[Amdt. 178–40, 41 FR 38181, Sept. 9, 1976, as amended at 66 FR 45185, Aug. 28, 2001]

§ 178.320 General requirements applicable to all DOT specification cargo tank motor vehicles.

(a) *Definitions.* For the purpose of this subchapter:

Appurtenance means any attachment to a cargo tank that has no lading retention or containment function and provides no structural support to the cargo tank.

Baffle means a non-liquid-tight transverse partition device that deflects, checks or regulates fluid motion in a tank.

Bulkhead means a liquid-tight transverse closure at the ends of or between cargo tanks.

Cargo tank means a bulk packaging that:

(1) Is a tank intended primarily for the carriage of liquids, gases, solids, or

semi-solids and includes appurtenances, reinforcements, fittings, and closures (for *tank*, see §§178.337–1, 178.338–1, or 178.345–1, as applicable);

(2) Is permanently attached to or forms a part of a motor vehicle, or is not permanently attached to a motor vehicle but that, by reason of its size, construction, or attachment to a motor vehicle, is loaded or unloaded without being removed from the motor vehicle; and

(3) Is not fabricated under a specification for cylinders, intermediate bulk containers, multi-unit tank car tanks, portable tanks, or tank cars.

Cargo tank motor vehicle means a motor vehicle with one or more cargo tanks permanently attached to or forming an integral part of the motor vehicle.

Cargo tank wall means those parts of the cargo tank that make up the primary lading retention structure, including shell, bulkheads, and fittings and, when closed, yield the minimum volume of a completed cargo tank motor vehicle.

Charging line means a hose, tube, pipe, or a similar device used to pressurize a tank with material other than the lading.

Companion flange means one of two mating flanges where the flange faces are in contact or separated only by a thin leak-sealing gasket and are secured to one another by bolts or clamps.

Connecting structure means the structure joining two cargo tanks.

Constructed and certified in accordance with the ASME Code means a cargo tank is constructed and stamped in accordance with Section VIII of the ASME Code (IBR, see §171.7 of this subchapter), and is inspected and certified by an Authorized Inspector.

Constructed in accordance with the ASME Code means a cargo tank is constructed in accordance with Section VIII of the ASME Code with authorized exceptions (see §§178.346 through 178.348) and is inspected and certified by a Registered Inspector.

Design type means one or more cargo tanks that are made—

(1) To the same specification;

(2) By the same manufacturer;

(3) To the same engineering drawings and calculations, except for minor variations in piping that do not affect the lading retention capability of the cargo tank;

(4) Of the same materials of construction;

(5) To the same cross-sectional dimensions;

(6) To a length varying by no more than 5 percent;

(7) With the volume varying by no more than 5 percent (due to a change in length only); and

(8) For the purposes of §178.338 only, with the same insulation system.

External self-closing stop valve means a self-closing stop valve designed so that the self-stored energy source is located outside the cargo tank and the welded flange.

Extreme dynamic loading means the maximum loading a cargo tank motor vehicle may experience during its expected life, excluding accident loadings resulting from an accident, such as overturn or collision.

Flange means the structural ring for guiding or attachment of a pipe or fitting with another flange (companion flange), pipe, fitting or other attachment.

Inspection pressure means the pressure used to determine leak tightness of the cargo tank when testing with pneumatic pressure.

Internal self-closing stop valve means a self-closing stop valve designed so that the self-stored energy source is located inside the cargo tank or cargo tank sump, or within the welded flange, and the valve seat is located within the cargo tank or within one inch of the external face of the welded flange or sump of the cargo tank.

Lading means the hazardous material contained in a cargo tank.

Loading/unloading connection means the fitting in the loading/unloading line farthest from the loading/unloading outlet to which the loading/unloading hose, pipe, or device is attached.

Loading/unloading outlet means a cargo tank outlet used for normal loading/unloading operations.

Loading/unloading stop valve means the stop valve farthest from the cargo tank loading/unloading outlet to which

the loading/unloading connection is attached.

Manufacturer means any person engaged in the manufacture of a DOT specification cargo tank, cargo tank motor vehicle, or cargo tank equipment that forms part of the cargo tank wall. This term includes attaching a cargo tank to a motor vehicle or to a motor vehicle suspension component that involves welding on the cargo tank wall. A manufacturer must register with the Department in accordance with subpart F of part 107 in subpart A of this chapter.

Maximum allowable working pressure or *MAWP* means the maximum pressure allowed at the top of the tank in its normal operating position. The MAWP must be calculated as prescribed in Section VIII of the ASME Code. In use, the MAWP must be greater than or equal to the maximum lading pressure conditions prescribed in § 173.33 of this subchapter for each material transported.

Maximum lading pressure. See § 173.33(c).

Minimum thickness means the minimum required shell and head (and baffle and bulkhead when used as tank reinforcement) thickness needed to meet the specification. The minimum thickness is the *greatest* of the following values: (1)(i) For MC 330, MC 331, and MC 338 cargo tanks, the specified minimum thickness found the applicable specification(s); or

(ii) For DOT 406, DOT 407 and DOT 412 cargo tanks, the specified minimum thickness found in Tables I and II of the applicable specification(s); or

(iii) For MC 300, MC 301, MC 302, MC 303, MC 304, MC 305, MC 306, MC 307, MC 310, MC 311, and MC 312 cargo tanks, the in-service minimum thickness prescribed in Tables I and II of § 180.407(i)(5) of this subchapter, for the minimum thickness specified by Tables I and II of the applicable specification(s); or

(2) The thickness necessary to meet with the structural integrity and accident damage requirements of the applicable specification(s); or

(3) The thickness as computed per the ASME Code requirements (if applicable).

Multi-specification cargo tank motor vehicle means a cargo tank motor vehicle equipped with two or more cargo tanks fabricated to more than one cargo tank specification.

Normal operating loading means the loading a cargo tank motor vehicle may be expected to experience routinely in operation.

Nozzle means a subassembly consisting of a pipe or tubular section with or without a welded or forged flange on one end.

Outlet means any opening in the shell or head of a cargo tank, (including the means for attaching a closure), except that the following are not *outlets:* a threaded opening securely closed during transportation with a threaded plug or a threaded cap, a flanged opening securely closed during transportation with a bolted or welded blank flange, a manhole, a gauging device, a thermometer well, or a pressure relief device.

Outlet stop valve means the stop valve at a cargo tank loading or unloading outlet.

Pipe coupling means a fitting with internal threads on both ends.

Rear bumper means the structure designed to prevent a vehicle or object from under-riding the rear of another motor vehicle. *See* § 393.86 of this title.

Rear-end tank protection device means the structure designed to protect a cargo tank and any lading retention piping or devices in case of a rear end collision.

Self-closing stop valve means a stop valve held in the closed position by means of self-stored energy, that opens only by application of an external force and that closes when the external force is removed.

Shell means the circumferential portion of a cargo tank defined by the basic design radius or radii excluding the bulkheads.

Stop valve means a valve that stops the flow of lading.

Sump means a protrusion from the bottom of a cargo tank shell designed to facilitate complete loading and unloading of lading.

Tank means a container, consisting of a shell and heads, that forms a pressure tight vessel having openings designed to accept pressure tight fittings

or closures, but excludes any appurtenances, reinforcements, fittings, or closures.

Test pressure means the pressure to which a tank is subjected to determine structural integrity.

Toughness of material means the capability of a material to absorb energy represented by the area under a stress strain curve (indicating the energy absorbed per unit volume of the material) up to the point of rupture.

Vacuum cargo tank means a cargo tank that is loaded by reducing the pressure in the cargo tank to below atmospheric pressure.

Variable specification cargo tank means a cargo tank that is constructed in accordance with one specification, but that may be altered to meet another specification by changing relief device, closures, lading discharge devices, and other lading retention devices.

Void means the space between tank heads or bulkheads and a connecting structure.

Welded flange means a flange attached to the tank by a weld joining the tank shell to the cylindrical outer surface of the flange, or by a fillet weld joining the tank shell to a flange shaped to fit the shell contour.

(b) *Design certification.* (1) Each cargo tank or cargo tank motor vehicle design type, including its required accident damage protection device, must be certified to conform to the specification requirements by a Design Certifying Engineer who is registered in accordance with subpart F of part 107 of this title. An accident damage protection device is a rear-end protection, overturn protection, or piping protection device.

(2) The Design Certifying Engineer shall furnish to the manufacturer a certificate to indicate compliance with the specification requirements. The certificate must include the sketches, drawings, and calculations used for certification. Each certificate, including sketches, drawings, and calculations, shall be signed by the Design Certifying Engineer.

(3) The manufacturer shall retain the design certificate at his principal place of business for as long as he manufactures DOT specification cargo tanks.

(c) *Exceptions to the ASME Code.* Unless otherwise specified, when exceptions are provided in this subpart from compliance with certain paragraphs of the ASME Code, compliance with those paragraphs is not prohibited.

[Amdt. 178–89, 55 FR 37055, Sept. 7, 1990, as amended by Amdt. 178–98, 58 FR 33306, June 16, 1993; Amdt. 178–118, 61 FR 51339, Oct. 1, 1996; 68 FR 19277, Apr. 18, 2003; 68 FR 52370, Sept. 3, 2003; 68 FR 75752, Dec. 31, 2003; 76 FR 43532, July 20, 2011]

§ 178.337 Specification MC 331; cargo tank motor vehicle primarily for transportation of compressed gases as defined in subpart G of part 173 of this subchapter.

§ 178.337–1 General requirements.

(a) *ASME Code construction.* Tanks must be—

(1) Seamless or welded construction, or a combination of both;

(2) Designed, constructed, certified, and stamped in accordance with Section VIII of the ASME Code (IBR, see § 171.7 of this subchapter);

(3) Made of steel or aluminum; however, if aluminum is used, the cargo tank must be insulated and the hazardous material to be transported must be compatible with the aluminum (see §§ 178.337–1(e)(2), 173.315(a) table, and 178.337–2(a)(1) of this subchapter); and

(4) Covered with a steel jacket if the cargo tank is insulated and used to transport a flammable gas (see § 173.315(a) table Note 11 of this subchapter).

(b) *Design pressure.* The design pressure of a cargo tank authorized under this specification shall be not less than the vapor pressure of the commodity contained therein at 115 °F. or as prescribed for a particular commodity in § 173.315(a) of this subchapter, except that in no case shall the design pressure of any cargo tank be less than 100 p.s.i.g. nor more than 500 p.s.i.g.

NOTE 1: The term *design pressure* as used in this specification, is identical to the term *MAWP* as used in the ASME Code.

(c) *Openings.* (1) Excess pressure relief valves shall be located in the top of the cargo tank or heads.

(2) A chlorine cargo tank shall have only one opening. That opening shall be in the top of the cargo tank and

shall be fitted with a nozzle that meets the following requirements:

(i) On a cargo tank manufactured on or before December 31, 1974, the nozzle shall be protected by a dome cover plate which conforms to either the standard of The Chlorine Institute, Inc., Dwg. 103–3, dated January 23, 1958, or to the standard specified in paragraph (c) (2) (ii) of this section.

(ii) On a cargo tank manufactured on or after January 1, 1975, the nozzle shall be protected by a manway cover which conforms to the standard of The Chlorine Institute, Inc., Dwg. 103–4, dated September 1, 1971.

(d) *Reflective design.* Every uninsulated cargo tank permanently attached to a cargo tank motor vehicle shall, unless covered with a jacket made of aluminum, stainless steel, or other bright nontarnishing metal, be painted a white, aluminum or similar reflecting color on the upper two-thirds of area of the cargo tank.

(e) *Insulation.* (1) Each cargo tank required to be insulated must conform with the use and performance requirements contained in §§173.315(a) table and 178.337–1 (a)(3) and (e)(2) of this subchapter.

(2) Each cargo tank intended for chlorine; carbon dioxide, refrigerated liquid; or nitrous oxide, refrigerated liquid service must have suitable insulation of such thickness that the overall thermal conductance is not more than 0.08 Btu per square foot per °F differential per hour. The conductance must be determined at 60 °F. Insulation material used on cargo tanks for nitrous oxide, refrigerated liquid must be noncombustible. Insulating material used on cargo tanks for chlorine must be corkboard or polyurethane foam, with a minimum thickness of 4 inches, or 2 inches minimum thickness of ceramic fiber/fiberglass of 4 pounds per cubic foot minimum density covered by 2 inches minimum thickness of fiber.

(f) *Postweld heat treatment.* Postweld heat treatment must be as prescribed in the ASME Code except that each cargo tank constructed in accordance with Part UHT of Section VIII of the ASME Code must be postweld heat treated. Each chlorine cargo tank must be fully radiographed and postweld heat treated in accordance with the provisions in Section VIII of the ASME Code under which it is constructed. Where postweld heat treatment is required, the cargo tank must be treated as a unit after completion of all the welds in and/or to the shells and heads. The method must be as prescribed in Section VIII of the ASME Code. Welded attachments to pads may be made after postweld heat treatment. A cargo tank used for anhydrous ammonia must be postweld heat treated. The postweld heat treatment must be as prescribed in Section VIII of the ASME Code, but in no event at less than 1,050 §F cargo tank metal temperature.

(g) *Definitions.* The following definitions apply to §§178.337–1 through 178.337–18:

Emergency discharge control means the ability to stop a cargo tank unloading operation in the event of an unintentional release. Emergency discharge control can utilize passive or off-truck remote means to stop the unloading operation. A passive means of emergency discharge control automatically shuts off the flow of product without the need for human intervention within 20 seconds of an unintentional release caused by a complete separation of the liquid delivery hose. An off-truck remote means of emergency discharge control permits a qualified person attending the unloading operation to close the cargo tank's internal self-closing stop valve and shut off all motive and auxiliary power equipment at a distance from the cargo tank motor vehicle.

Excess flow valve, integral excess flow valve, or excess flow feature means a component that will close automatically if the flow rate of a gas or liquid through the component reaches or exceeds the rated flow of gas or liquid specified by the original valve manufacturer when piping mounted directly on the valve is sheared off before the first valve, pump, or fitting downstream from the valve.

Internal self-closing stop valve means a primary shut off valve installed in a product discharge outlet of a cargo tank and designed to be kept closed by self-stored energy.

Primary discharge control system means a primary shut-off installed at a product discharge outlet of a cargo

tank consisting of an internal self-closing stop valve that may include an integral excess flow valve or an excess flow feature, together with linkages that must be installed between the valve and remote actuator to provide manual and thermal on-truck remote means of closure.

[Order 59–B, 30 FR 579, Jan. 16, 1965. Redesignated at 32 FR 5606, Apr. 5, 1967]

EDITORIAL NOTE: For FEDERAL REGISTER citations affecting § 178.337–1, see the List of CFR Sections Affected, which appears in the Finding Aids section of the printed volume and at *www.fdsys.gov*.

§ 178.337–2 Material.

(a) *General.* (1) All material used for construction of the cargo tank and appurtenances must be suitable for use with the commodities to be transported therein and must conform to the requirements in Section II of the ASME Code (IBR, see § 171.7 of this subchapter) and/or requirements of the American Society for Testing and Materials in all respects.

(2) Impact tests are required on steel used in the fabrication of each cargo tank constructed in accordance with part UHT in Section VIII of the ASME Code. The tests must be made on a lot basis. A lot is defined as 100 tons or less of the same heat treatment processing lot having a thickness variation no greater than plus or minus 25 percent. The minimum impact required for full size specimens must be 20 foot-pounds in the longitudinal direction at −30 °F., Charpy V-Notch and 15 foot-pounds in the transverse direction at −30 °F., Charpy V-Notch. The required values for subsize specimens must be reduced in direct proportion to the cross-sectional area of the specimen beneath the notch. If a lot does not meet this requirement, individual plates may be accepted if they individually meet this requirement.

(3) The fabricator shall record the heat, and slab numbers, and the certified Charpy impact values, where required, of each plate used in each cargo tank on a sketch showing the location of each plate in the shell and heads of the cargo tank. Copies of each sketch shall be provided to the owner and retained for at least five years by the fabricator and made available to duly identified representatives of the Department of Transportation.

(4) The direction of final rolling of the shell material shall be the circumferential orientation of the cargo tank shell.

(b) *For a chlorine cargo tank.* Plates, the manway nozzle, and anchorage shall be made of carbon steel which meets the following requirements:

(1) For a cargo tank manufactured on or before December 31, 1974—

(i) Material shall conform to ASTM A 300, ''Steel Plates for Pressure Vessels for Service at Low Temperatures'' (IBR, see § 171.7 of this subchapter);

(ii) Material shall be Class 1, Grade A, flange or firebox quality;

(iii) Plate impact test specimens, as required under paragraph (a) of this section, shall be of the Charpy keyhole notch type; and

(iv) Plate impact test specimens shall meet the impact test requirements in paragraph (a) of this section in both the longitudinal and transverse directions of rolling at a temperature of minus 45.5 C. (−50 °F.).

(2) For a cargo tank manufactured on or after January 1, 1975—

(i) Material shall conform to ASTM A 612 (IBR, see § 171.7 of this subchapter), Grade B or A 516/A 516M (IBR, see § 171.7 of this subchapter), Grade 65 or 70;

(ii) Material shall meet the Charpy V-notch test requirements of ASTM A 20/A 20M (IBR, see § 171.7 of this subchapter); and

(iii) Plate impact test specimens shall meet the impact test requirements in paragraph (a) of this section in both the longitudinal and transverse directions of rolling at a temperature of minus 40 °C. (−40 °F.).

(c) A cargo tank in anhydrous ammonia service must be constructed of steel. The use of copper, silver, zinc or their alloys is prohibited. Baffles made from aluminum may be used only if joined to the cargo tank by a process not requiring postweld heat treatment of the cargo tank.

[Order 59–B, 30 FR 579, Jan. 16, 1965. Redesignated at 32 FR 5606, Apr. 5, 1967]

EDITORIAL NOTE: For FEDERAL REGISTER citations affecting § 178.337–2, see the List of CFR Sections Affected, which appears in the Finding Aids section of the printed volume and at *www.fdsys.gov*.

§ 178.337–3 Structural integrity.

(a) General requirements and acceptance criteria. (1) Except as provided in paragraph (d) of this section, the maximum calculated design stress at any point in the cargo tank may not exceed the maximum allowable stress value prescribed in Section VIII of the ASME Code (IBR, see § 171.7 of this subchapter), or 25 percent of the tensile strength of the material used.

(2) The relevant physical properties of the materials used in each cargo tank may be established either by a certified test report from the material manufacturer or by testing in conformance with a recognized national standard. In either case, the ultimate tensile strength of the material used in the design may not exceed 120 percent of the ultimate tensile strength specified in either the ASME Code or the ASTM standard to which the material is manufactured.

(3) The maximum design stress at any point in the cargo tank must be calculated separately for the loading conditions described in paragraphs (b), (c), and (d) of this section. Alternate test or analytical methods, or a combination thereof, may be used in place of the procedures described in paragraphs (b), (c), and (d) of this section, if the methods are accurate and verifiable.

(4) Corrosion allowance material may not be included to satisfy any of the design calculation requirements of this section.

(b) *Static design and construction.* (1) The static design and construction of each cargo tank must be in accordance with Section VIII of the ASME Code. The cargo tank design must include calculation of stresses generated by design pressure, the weight of lading, the weight of structure supported by the cargo tank wall, and the effect of temperature gradients resulting from lading and ambient temperature extremes. When dissimilar materials are used, their thermal coefficients must be used in calculation of thermal stresses.

(2) Stress concentrations in tension, bending and torsion which occur at pads, cradles, or other supports must be considered in accordance with appendix G in Section VIII of the ASME Code.

(c) *Shell design.* Shell stresses resulting from static or dynamic loadings, or combinations thereof, are not uniform throughout the cargo tank motor vehicle. The vertical, longitudinal, and lateral normal operating loadings can occur simultaneously and must be combined. The vertical, longitudinal and lateral extreme dynamic loadings occur separately and need not be combined.

(1) *Normal operating loadings.* The following procedure addresses stress in the tank shell resulting from normal operating loadings. The effective stress (the maximum principal stress at any point) must be determined by the following formula:

$$S = 0.5(S_y + S_x) \pm [0.25(S_y - S_x)^2 + S_x2]^{0.5}$$

Where:

(i) S = effective stress at any given point under the combination of static and normal operating loadings that can occur at the same time, in psi.

(ii) S_y = circumferential stress generated by the MAWP and external pressure, when applicable, plus static head, in psi.

(iii) S_x = The following net longitudinal stress generated by the following static and normal operating loading conditions, in psi:

(A) The longitudinal stresses resulting from the MAWP and external pressure, when applicable, plus static head, in combination with the bending stress generated by the static weight of the fully loaded cargo tank motor vehicle, all structural elements, equipment and appurtenances supported by the cargo tank wall;

(B) The tensile or compressive stress resulting from normal operating longitudinal acceleration or deceleration. In each case, the forces applied must be 0.35 times the vertical reaction at the suspension assembly, applied at the road surface, and as transmitted to the cargo tank wall through the suspension assembly of a trailer during deceleration; or the horizontal pivot of the truck tractor or converter dolly fifth wheel, or the drawbar hinge on the fixed dolly during acceleration; or anchoring and support members of a truck during acceleration and deceleration, as applicable. The vertical reaction must be calculated based on the

static weight of the fully loaded cargo tank motor vehicle, all structural elements, equipment and appurtenances supported by the cargo tank wall. The following loadings must be included:

(*1*) The axial load generated by a decelerative force;

(*2*) The bending moment generated by a decelerative force;

(*3*) The axial load generated by an accelerative force; and

(*4*) The bending moment generated by an accelerative force; and

(C) The tensile or compressive stress generated by the bending moment resulting from normal operating vertical accelerative force equal to 0.35 times the vertical reaction at the suspension assembly of a trailer; or the horizontal pivot of the upper coupler (fifth wheel) or turntable; or anchoring and support members of a truck, as applicable. The vertical reaction must be calculated based on the static weight of the fully loaded cargo tank motor vehicle, all structural elements, equipment and appurtenances supported by the cargo tank wall.

(iv) S_s = The following shear stresses generated by the following static and normal operating loading conditions, in psi:

(A) The static shear stress resulting from the vertical reaction at the suspension assembly of a trailer, and the horizontal pivot of the upper coupler (fifth wheel) or turntable; or anchoring and support members of a truck, as applicable. The vertical reaction must be calculated based on the static weight of the fully loaded cargo tank motor vehicle, all structural elements, equipment and appurtenances supported by the cargo tank wall;

(B) The vertical shear stress generated by a normal operating accelerative force equal to 0.35 times the vertical reaction at the suspension assembly of a trailer; or the horizontal pivot of the upper coupler (fifth wheel) or turntable; or anchoring and support members of a truck, as applicable. The vertical reaction must be calculated based on the static weight of the fully loaded cargo tank motor vehicle, all structural elements, equipment and appurtenances supported by the cargo tank wall;

(C) The lateral shear stress generated by a normal operating lateral accelerative force equal to 0.2 times the vertical reaction at each suspension assembly of a trailer, applied at the road surface, and as transmitted to the cargo tank wall through the suspension assembly of a trailer, and the horizontal pivot of the upper coupler (fifth wheel) or turntable; or anchoring and support members of a truck, as applicable. The vertical reaction must be calculated based on the static weight of the fully loaded cargo tank motor vehicle, all structural elements, equipment and appurtenances supported by the cargo tank wall; and

(D) The torsional shear stress generated by the same lateral forces as described in paragraph (c)(1)(iv)(C) of this section.

(2) *Extreme dynamic loadings*. The following procedure addresses stress in the tank shell resulting from extreme dynamic loadings. The effective stress (the maximum principal stress at any point) must be determined by the following formula:

$$S = 0.5(S_y + S_x) \pm [0.25(S_y - S_x)^2 + S_s2]^{0.5}$$

Where:

(i) S = effective stress at any given point under a combination of static and extreme dynamic loadings that can occur at the same time, in psi.

(ii) S_y = circumferential stress generated by MAWP and external pressure, when applicable, plus static head, in psi.

(iii) S_x = the following net longitudinal stress generated by the following static and extreme dynamic loading conditions, in psi:

(A) The longitudinal stresses resulting from the MAWP and external pressure, when applicable, plus static head, in combination with the bending stress generated by the static weight of the fully loaded cargo tank motor vehicle, all structural elements, equipment and appurtenances supported by the tank wall;

(B) The tensile or compressive stress resulting from extreme longitudinal acceleration or deceleration. In each case the forces applied must be 0.7 times the vertical reaction at the suspension assembly, applied at the road surface, and as transmitted to the

cargo tank wall through the suspension assembly of a trailer during deceleration; or the horizontal pivot of the truck tractor or converter dolly fifth wheel, or the drawbar hinge on the fixed dolly during acceleration; or the anchoring and support members of a truck during acceleration and deceleration, as applicable. The vertical reaction must be calculated based on the static weight of the fully loaded cargo tank motor vehicle, all structural elements, equipment and appurtenances supported by the cargo tank wall. The following loadings must be included:

(*1*) The axial load generated by a decelerative force;

(*2*) The bending moment generated by a decelerative force;

(*3*) The axial load generated by an accelerative force; and

(*4*) The bending moment generated by an accelerative force; and

(C) The tensile or compressive stress generated by the bending moment resulting from an extreme vertical accelerative force equal to 0.7 times the vertical reaction at the suspension assembly of a trailer, and the horizontal pivot of the upper coupler (fifth wheel) or turntable; or the anchoring and support members of a truck, as applicable. The vertical reaction must be calculated based on the static weight of the fully loaded cargo tank motor vehicle, all structural elements, equipment and appurtenances supported by the cargo tank wall.

(iv) S_s = The following shear stresses generated by static and extreme dynamic loading conditions, in psi:

(A) The static shear stress resulting from the vertical reaction at the suspension assembly of a trailer, and the horizontal pivot of the upper coupler (fifth wheel) or turntable; or anchoring and support members of a truck, as applicable. The vertical reaction must be calculated based on the static weight of the fully loaded cargo tank motor vehicle, all structural elements, equipment and appurtenances supported by the cargo tank wall;

(B) The vertical shear stress generated by an extreme vertical accelerative force equal to 0.7 times the vertical reaction at the suspension assembly of a trailer, and the horizontal pivot of the upper coupler (fifth wheel) or turntable; or anchoring and support members of a truck, as applicable. The vertical reaction must be calculated based on the static weight of the fully loaded cargo tank motor vehicle, all structural elements, equipment and appurtenances supported by the cargo tank wall;

(C) The lateral shear stress generated by an extreme lateral accelerative force equal to 0.4 times the vertical reaction at the suspension assembly of a trailer, applied at the road surface, and as transmitted to the cargo tank wall through the suspension assembly of a trailer, and the horizontal pivot of the upper coupler (fifth wheel) or turntable; or anchoring and support members of a truck, as applicable. The vertical reaction must be calculated based on the static weight of the fully loaded cargo tank motor vehicle, all structural elements, equipment and appurtenances supported by the cargo tank wall; and

(D) The torsional shear stress generated by the same lateral forces as described in paragraph (c)(2)(iv)(C) of this section.

(d) In order to account for stresses due to impact in an accident, the design calculations for the cargo tank shell and heads must include the load resulting from the design pressure in combination with the dynamic pressure resulting from a longitudinal deceleration of ''2g''. For this loading condition the stress value used may not exceed the lesser of the yield strength or 75 percent of the ultimate tensile strength of the material of construction. For cargo tanks constructed of stainless steel the maximum design stress may not exceed 75 percent of the ultimate tensile strength of the type steel used.

(e) The minimum metal thickness for the shell and heads on tanks with a design pressure of 100 psig or more must be 4.75 mm (0.187 inch) for steel and 6.86 mm (0.270 inch) for aluminum, except for chlorine and sulfur dioxide tanks. In all cases, the minimum thickness of the tank shell and head shall be determined using structural design requirements in Section VIII of the ASME Code or 25% of the tensile strength of the material used. For a cargo tank

used in chlorine or sulfur dioxide service, the cargo tank must be made of steel. A corrosion allowance of 20 percent or 2.54 mm (0.10 inch), whichever is less, must be added to the thickness otherwise required for sulfur dioxide and chlorine tank material. In chlorine cargo tanks, the wall thickness must be at least 1.59 cm (0.625 inch), including corrosion allowance.

(f) Where a cargo tank support is attached to any part of the cargo tank wall, the stresses imposed on the cargo tank wall must meet the requirements in paragraph (a) of this section.

(g) The design, construction, and installation of an attachment, appurtenance to the cargo tank, structural support member between the cargo tank and the vehicle or suspension component, or accident protection device must conform to the following requirements:

(1) Structural members, the suspension sub-frame, accident protection structures, and external circumferential reinforcement devices must be used as sites for attachment of appurtenances and other accessories to the cargo tank, when practicable.

(2) A lightweight attachment to the cargo tank wall such as a conduit clip, brake line clip, skirting structure, lamp mounting bracket, or placard holder must be of a construction having lesser strength than the cargo tank wall materials and may not be more than 72 percent of the thickness of the material to which it is attached. The lightweight attachment may be secured directly to the cargo tank wall if the device is designed and installed in such a manner that, if damaged, it will not affect the lading retention integrity of the tank. A lightweight attachment must be secured to the cargo tank shell or head by a continuous weld or in such a manner as to preclude formation of pockets which may become sites for corrosion. Attachments meeting the requirements of this paragraph are not authorized for cargo tanks constructed under part UHT in Section VIII of the ASME Code.

(3) Except as prescribed in paragraphs (g)(1) and (g)(2) of this section, the welding of any appurtenance to the cargo tank wall must be made by attachment of a mounting pad so that there will be no adverse effect upon the lading retention integrity of the cargo tank if any force less than that prescribed in paragraph (b)(1) of this section is applied from any direction. The thickness of the mounting pad may not be less than that of the shell wall or head wall to which it is attached, and not more than 1.5 times the shell or head thickness. However, a pad with a minimum thickness of 0.25 inch may be used when the shell or head thickness is over 0.25 inch. If weep holes or telltale holes are used, the pad must be drilled or punched at the lowest point before it is welded to the tank. Each pad must—

(i) Be fabricated from material determined to be suitable for welding to both the cargo tank material and the material of the appurtenance or structural support member; a Design Certifying Engineer must make this determination considering chemical and physical properties of the materials and must specify filler material conforming to the requirements in Section VIII of the ASME Code (IBR, see §171.7 of this subchapter).

(ii) Be preformed to an inside radius no greater than the outside radius of the cargo tank at the attachment location.

(iii) Extend at least 2 inches in each direction from any point of attachment of an appurtenance or structural support member. This dimension may be measured from the center of the attached structural member.

(iv) Have rounded corners, or otherwise be shaped in a manner to minimize stress concentrations on the shell or head.

(v) Be attached by continuous fillet welding. Any fillet weld discontinuity may only be for the purpose of preventing an intersection between the fillet weld and a tank or jacket seam weld.

[Amdt. 178–89, 55 FR 37056, Sept. 7, 1990, as amended by Amdt. 178–104, 59 FR 49135, Sept. 26, 1994; Amdt. 178–105, 60 FR 17401, Apr. 5, 1995; Amdt. 178–118, 61 FR 51340, Oct. 1, 1996; 65 FR 58631, Sept. 29, 2000; 68 FR 19279, Apr. 18, 2003; 68 FR 52370, Sept. 3, 2003; 68 FR 75753, Dec. 31, 2003]

§ 178.337–4 Joints.

(a) Joints shall be as required in Section VIII of the ASME Code (IBR, see § 171.7 of this subchapter), with all undercutting in shell and head material repaired as specified therein.

(b) Welding procedure and welder performance must be in accordance with Section IX of the ASME Code. In addition to the essential variables named therein, the following must be considered as essential variables: Number of passes; thickness of plate; heat input per pass; and manufacturer's identification of rod and flux. When fabrication is done in accordance with part UHT in Section VIII of the ASME Code, filler material containing more than 0.08 percent vanadium must not be used. The number of passes, thickness of plate, and heat input per pass may not vary more than 25 percent from the procedure or welder qualifications. Records of the qualifications must be retained for at least 5 years by the cargo tank manufacturer and must be made available to duly identified representatives of the Department and the owner of the cargo tank.

(c) All longitudinal shell welds shall be located in the upper half of the cargo tank.

(d) Edge preparation of shell and head components may be by machine heat processes, provided such surfaces are remelted in the subsequent welding process. Where there will be no subsequent remelting of the prepared surface as in a tapered section, the final 0.050 inch of material shall be removed by mechanical means.

(e) The maximum tolerance for misalignment and butting up shall be in accordance with the requirement in Section VIII of the ASME Code.

(f) Substructures shall be properly fitted before attachment, and the welding sequence shall be such as to minimize stresses due to shrinkage of welds.

[Order 59–B, 30 FR 580, Jan. 16, 1965. Redesignated at 32 FR 5606, Apr. 5, 1967]

EDITORIAL NOTE: For FEDERAL REGISTER citations affecting § 178.337–4, see the List of CFR Sections Affected, which appears in the Finding Aids section of the printed volume and at *www.fdsys.gov*.

§ 178.337–5 Bulkheads, baffles and ring stiffeners.

(a) Not a specification requirement.

(b) [Reserved]

[Order 59–B, 30 FR 580, Jan. 16, 1965. Redesignated at 32 FR 5606, Apr. 5, 1967]

§ 178.337–6 Closure for manhole.

(a) Each cargo tank marked or certified after April 21, 1994, must be provided with a manhole conforming to paragraph UG–46(g)(1) and other applicable requirements in Section VIII of the ASME Code (IBR, see § 171.7 of this subchapter), except that a cargo tank constructed of NQT steel having a capacity of 3,500 water gallons or less may be provided with an inspection opening conforming to paragraph UG–46 and other applicable requirements of the ASME Code instead of a manhole.

(b) The manhole assembly of cargo tanks constructed after June 30, 1979, may not be located on the front head of the cargo tank.

[Amdt. 178–7, 34 FR 18250, Nov. 14, 1969, as amended by Amdt. 178–52, 43 FR 58820, Dec. 18, 1978; Amdt. 178–89, 54 FR 25017, June 12, 1989; 55 FR 21038, May 22, 1990; 56 FR 27876, June 17, 1991; 58 FR 12905, Mar. 8, 1993; Amdt. 178–118, 61 FR 51340, Oct. 1, 1996; 68 FR 75753, Dec. 31, 2003]

§ 178.337–7 Overturn protection.

(a) See § 178.337–10.

(b) [Reserved]

[Order 59–B, 30 FR 580, Jan. 16, 1965. Redesignated at 32 FR 5606, Apr. 5, 1967]

§ 178.337–8 Openings, inlets, and outlets.

(a) *General.* The requirements in this paragraph (a) apply to MC 331 cargo tanks except for those used to transport chlorine. The requirements for inlets and outlets on chlorine cargo tanks are in paragraph (b) of this section.

(1) An opening must be provided on each cargo tank used for the transportation of liquefied materials to permit complete drainage.

(2) Except for gauging devices, thermometer wells, pressure relief valves, manhole openings, product inlet openings, and product discharge openings, each opening in a cargo tank must be

closed with a plug, cap, or bolted flange.

(3) Except as provided in paragraph (b) of this section, each product inlet opening, including vapor return lines, must be fitted with a back flow check valve or an internal self-closing stop valve located inside the cargo tank or inside a welded nozzle that is an integral part of the cargo tank. The valve seat must be located inside the cargo tank or within 2.54 cm (one inch) of the external face of the welded flange. Damage to parts exterior to the cargo tank or mating flange must not prevent effective seating of the valve. All parts of a valve inside a cargo tank or welded flange must be made of material that will not corrode or deteriorate in the presence of the lading.

(4) Except as provided in paragraphs (a)(5), (b), and (c) of this section, each liquid or vapor discharge outlet must be fitted with a primary discharge control system as defined in § 178.337–1(g). Thermal remote operators must activate at a temperature of 121.11 °C (250 °F) or less. Linkages between closures and remote operators must be corrosion resistant and effective in all types of environmental conditions incident to discharging of product.

(i) On a cargo tank over 13,247.5 L (3,500 gallons) water capacity, thermal and mechanical means of remote closure must be installed at the ends of the cargo tank in at least two diagonally opposite locations. If the loading/unloading connection at the cargo tank is not in the general vicinity of one of the two locations specified in the first sentence of this paragraph (a)(4)(i), additional means of thermal remote closure must be installed so that heat from a fire in the loading/unloading connection area or the discharge pump will activate the primary discharge control system. The loading/unloading connection area is where hoses or hose reels are connected to the permanent metal piping.

(ii) On a cargo tank of 13,247.5 L (3,500 gallons) water capacity or less, a thermal means of remote closure must be installed at or near the internal self-closing stop valve. A mechanical means of remote closure must be installed on the end of the cargo tank furthest away from the loading/unloading connection area. The loading/unloading connection area is where hoses or hose reels are connected to the permanent metal piping. Linkages between closures and remote operators must be corrosion resistant and effective in all types of environmental conditions incident to discharge of product.

(iii) All parts of a valve inside a cargo tank or within a welded flange must be made of material that will not corrode or deteriorate in the presence of the lading.

(iv) An excess flow valve, integral excess flow valve, or excess flow feature must close if the flow reaches the rated flow of a gas or liquid specified by the original valve manufacturer when piping mounted directly on the valve is sheared off before the first valve, pump, or fitting downstream from the excess flow valve, integral excess flow valve, or excess flow feature.

(v) An integral excess flow valve or the excess flow feature of an internal self-closing stop valve may be designed with a bypass, not to exceed 0.1016 cm (0.040 inch) diameter opening, to allow equalization of pressure.

(vi) The internal self-closing stop valve must be designed so that the self-stored energy source and the valve seat are located inside the cargo tank or within 2.54 cm (one inch) of the external face of the welded flange. Damage to parts exterior to the cargo tank or mating flange must not prevent effective seating of the valve.

(5) A primary discharge control system is not required on the following:

(i) A vapor or liquid discharge opening of less than 1¼ NPT equipped with an excess flow valve together with a manually operated external stop valve in place of an internal self-closing stop valve.

(ii) An engine fuel line on a truck-mounted cargo tank of not more than ¾ NPT equipped with a valve having an integral excess flow valve or excess flow feature.

(iii) A cargo tank motor vehicle used to transport refrigerated liquids such as argon, carbon dioxide, helium, krypton, neon, nitrogen, and xenon, or mixtures thereof.

(6) In addition to the internal self-closing stop valve, each filling and discharge line must be fitted with a stop valve located in the line between the internal self-closing stop valve and the hose connection. A back flow check valve or excess flow valve may not be used to satisfy this requirement.

(7) An excess flow valve may be designed with a bypass, not to exceed a 0.1016 centimeter (0.040 inch) diameter opening, to allow equalization of pressure.

(b) *Inlets and discharge outlets on chlorine tanks.* The inlet and discharge outlets on a cargo tank used to transport chlorine must meet the requirements of § 178.337–1(c)(2) and must be fitted with an internal excess flow valve. In addition to the internal excess flow valve, the inlet and discharge outlets must be equipped with an external stop valve (angle valve). Excess flow valves must conform to the standards of The Chlorine Institute, Inc., as follows:

(1) A valve conforming to The Chlorine Institute, Inc., Dwg. 101–7 (IBR, see § 171.7 of this subchapter), must be installed under each liquid angle valve.

(2) A valve conforming to The Chlorine Institute, Inc., Dwg. 106–6 (IBR, see § 171.7 of this subchapter), must be installed under each gas angle valve.

(c) *Discharge outlets on carbon dioxide, refrigerated liquid, cargo tanks.* A discharge outlet on a cargo tank used to transport carbon dioxide, refrigerated liquid is not required to be fitted with an internal self-closing stop valve.

[64 FR 28049, May 24, 1999, as amended at 66 FR 45387, Aug. 28, 2001; 68 FR 19279, Apr. 18, 2003; 68 FR 75753, Dec. 31, 2003]

§ 178.337–9 Pressure relief devices, piping, valves, hoses, and fittings.

(a) *Pressure relief devices.* (1) See § 173.315(i) of this subchapter.

(2) On cargo tanks for carbon dioxide or nitrous oxide see § 173.315 (i) (9) and (10) of this subchapter.

(3) Each valve must be designed, constructed, and marked for a rated pressure not less than the cargo tank design pressure at the temperature expected to be encountered.

(b) *Piping, valves, hose, and fittings.* (1) The burst pressure of all piping, pipe fittings, hose and other pressure parts, except for pump seals and pressure relief devices, must be at least 4 times the design pressure of the cargo tank. Additionally, the burst pressure may not be less than 4 times any higher pressure to which each pipe, pipe fitting, hose or other pressure part may be subjected to in service. For chlorine service, see paragraph (b)(7) of this section.

(2) Pipe joints must be threaded, welded, or flanged. If threaded pipe is used, the pipe and fittings must be Schedule 80 weight or heavier, except for sacrificial devices. Malleable metal, stainless steel, or ductile iron must be used in the construction of primary valve body parts and fittings used in liquid filling or vapor equalization. Stainless steel may be used for internal components such as shutoff discs and springs except where incompatible with the lading to be transported. Where copper tubing is permitted, joints must be brazed or be of equally strong metal union type. The melting point of the brazing material may not be lower than 538 °C (1,000 °F). The method of joining tubing may not reduce the strength of the tubing.

(3) Each hose coupling must be designed for a pressure of at least 120 percent of the hose design pressure and so that there will be no leakage when connected.

(4) Piping must be protected from damage due to thermal expansion and contraction, jarring, and vibration. Slip joints are not authorized for this purpose.

(5) [Reserved]

(6) Cargo tank manufacturers and fabricators must demonstrate that all piping, valves, and fittings on a cargo tank are free from leaks. To meet this requirement, the piping, valves, and fittings must be tested after installation at not less than 80 percent of the design pressure marked on the cargo tank.

(7) A hose assembler must:

(i) Permanently mark each hose assembly with a unique identification number.

(ii) Demonstrate that each hose assembly is free from leaks by performing the tests and inspections in § 180.416(f) of this subchapter.

(iii) Mark each hose assembly with the month and year of its original pressure test.

(8) *Chlorine cargo tanks.* Angle valves on cargo tanks intended for chlorine service must conform to the standards of the Chlorine Institute, Inc., Dwg. 104–8 or ''Section 3, Pamphlet 166, Angle Valve Guidelines for Chlorine Bulk Transportation.'' (IBR, see §171.7 of this subchapter). Before installation, each angle valve must be tested for leakage at not less than 225 psig using dry air or inert gas.

(c) *Marking inlets and outlets.* Except for gauging devices, thermometer wells, and pressure relief valves, each cargo tank inlet and outlet must be marked ''liquid'' or ''vapor'' to designate whether it communicates with liquid or vapor when the cargo tank is filled to the maximum permitted filling density. A filling line that communicates with vapor may be marked ''spray-fill'' instead of ''vapor.''

(d) *Refrigeration and heating coils.* (1) Refrigeration and heating coils must be securely anchored with provisions for thermal expansion. The coils must be pressure tested externally to at least the cargo tank test pressure, and internally to either the tank test pressure or twice the working pressure of the heating/refrigeration system, whichever is higher. A cargo tank may not be placed in service if any leakage occurs or other evidence of damage is found. The refrigerant or heating medium to be circulated through the coils must not be capable of causing any adverse chemical reaction with the cargo tank lading in the event of leakage. The unit furnishing refrigeration may be mounted on the motor vehicle.

(2) Where any liquid susceptible to freezing, or the vapor of any such liquid, is used for heating or refrigeration, the heating or refrigeration system shall be arranged to permit complete drainage.

[Order 59–B, 30 FR 580, Jan. 16, 1965. Redesignated at 32 FR 5606, Apr. 5, 1967]

EDITORIAL NOTE: For FEDERAL REGISTER citations affecting §178.337–9, see the List of CFR Sections Affected, which appears in the Finding Aids section of the printed volume and at *www.fdsys.gov*.

§178.337–10 Accident damage protection.

(a) All valves, fittings, pressure relief devices, and other accessories to the tank proper shall be protected in accordance with paragraph (b) of this section against such damage as could be caused by collision with other vehicles or objects, jack-knifing and overturning. In addition, pressure relief valves shall be so protected that in the event of overturn of the vehicle onto a hard surface, their opening will not be prevented and their discharge will not be restricted.

(b) The protective devices or housing must be designed to withstand static loading in any direction equal to twice the weight of the tank and attachments when filled with the lading, using a safety factor of not less than four, based on the ultimate strength of the material to be used, without damage to the fittings protected, and must be made of metal at least 3/16-inch thick.

(c) *Rear-end tank protection.* Rear-end tank protection devices must:

(1) Consist of at least one rear bumper designed to protect the cargo tank and all valves, piping and fittings located at the rear of the cargo tank from damage that could result in loss of lading in the event of a rear end collision. The bumper design must transmit the force of the collision directly to the chassis of the vehicle. The rear bumper and its attachments to the chassis must be designed to withstand a load equal to twice the weight of the loaded cargo tank motor vehicle and attachments, using a safety factor of four based on the tensile strength of the materials used, with such load being applied horizontally and parallel to the major axis of the cargo tank. The rear bumper dimensions must also meet the requirements of §393.86 of this title; or

(2) Conform to the requirements of §178.345–8(d).

(d) *Chlorine tanks.* A chlorine tank must be equipped with a protective housing and a manway cover to permit the use of standard emergency kits for controlling leaks in fittings on the dome cover plate. For tanks manufactured on or after October 1, 2009, the

housing and manway cover must conform to the Chlorine Institute, Inc., Dwg. 137–5 (IBR, see § 171.7 of this subchapter).

(e) *Piping and fittings*. Piping and fittings must be grouped in the smallest practicable space and protected from damage as required in this section.

(f) *Shear section*. A shear section or sacrificial device is required for the valves specified in the following locations:

(1) A section that will break under strain must be provided adjacent to or outboard of each valve specified in § 178.337–8(a)(3) and (4).

(2) Each internal self-closing stop valve, excess flow valve, and check valve must be protected by a shear section or other sacrificial device. The sacrificial device must be located in the piping system outboard of the stop valve and within the accident damage protection to prevent any accidental loss of lading. The failure of the sacrificial device must leave the protected lading protection device and its attachment to the cargo tank wall intact and capable of retaining product.

[Order 59–B, 30 FR 581, Jan. 16, 1965. Redesignated at 32 FR 5606, Apr. 5, 1967]

EDITORIAL NOTE: For FEDERAL REGISTER citations affecting § 178.337–10, see the List of CFR Sections Affected, which appears in the Finding Aids section of the printed volume and at *www.fdsys.gov*.

§ 178.337–11 Emergency discharge control.

(a) *Emergency discharge control equipment*. Emergency discharge control equipment must be installed in a liquid discharge line as specified by product and service in § 173.315(n) of this subchapter. The performance and certification requirements for emergency discharge control equipment are specified in § 173.315(n) of this subchapter and are not a part of the cargo tank motor vehicle certification made under this specification.

(b) *Engine fuel lines*. On a truck-mounted cargo tank, emergency discharge control equipment is not required on an engine fuel line of not more than ¾ NPT equipped with a valve having an integral excess flow valve or excess flow feature.

[64 FR 28050, May 24, 1999]

§ 178.337–12 [Reserved]

§ 178.337–13 Supporting and anchoring.

(a) A cargo tank that is not permanently attached to or integral with a vehicle chassis must be secured by the use of restraining devices designed to prevent relative motion between the cargo tank and the vehicle chassis when the vehicle is in operation. Such restraining devices must be readily accessible for inspection and maintenance.

(b) On a cargo tank motor vehicle designed and constructed so that the cargo tank constitutes in whole or in part the structural member used in place of a motor vehicle frame, the cargo tank must be supported by external cradles. A cargo tank mounted on a motor vehicle frame must be supported by external cradles or longitudinal members. Where used, the cradles must subtend at least 120 degrees of the shell circumference.

(c) The design calculations of the support elements must satisfy the requirements of § 178.337–3, (a), (b), (c), and (d).

(d) Where any cargo tank support is attached to any part of a cargo tank head, the stresses imposed upon the head must be provided for as required in paragraph (c) of this section.

[68 FR 19280, Apr. 18, 2003]

§ 178.337–14 Gauging devices.

(a) *Liquid level gauging devices*. See § 173.315(h) of this subchapter.

(b) *Pressure gauges*. (1) See § 173.315(h) of this subchapter.

(2) Each cargo tank used in carbon dioxide, refrigerated liquid or nitrous oxide, refrigerated liquid service must be provided with a suitable pressure gauge. A shut-off valve must be installed between the pressure gauge and the cargo tank.

(c) *Orifices*. See § 173.315(h) (3) and (4) of this subchapter.

[Amdt. 178–29, 38 FR 27599, Oct. 5, 1973, as amended by Amdt. 178–89, 54 FR 25018, June 12, 1989; Amdt. 178–118, 61 FR 51340, Oct. 1, 1996]

§ 178.337–15 Pumps and compressors.

(a) Liquid pumps or gas compressors, if used, must be of suitable design, adequately protected against breakage by collision, and kept in good condition. They may be driven by motor vehicle power take-off or other mechanical, electrical, or hydraulic means. Unless they are of the centrifugal type, they shall be equipped with suitable pressure actuated by-pass valves permitting flow from discharge to suction or to the cargo tank.

(b) A liquid chlorine pump may not be installed on a cargo tank intended for the transportation of chlorine.

[Amdt. 178–89, 54 FR 25018, June 12, 1989, as amended by Amdt. 178–118, 61 FR 51340, Oct. 1, 1996]

§ 178.337–16 Testing.

(a) *Inspection and tests.* Inspection of materials of construction of the cargo tank and its appurtenances and original test and inspection of the finished cargo tank and its appurtenances must be as required by Section VIII of the ASME Code (IBR, see § 171.7 of this subchapter) and as further required by this specification, except that for cargo tanks constructed in accordance with part UHT in Section VIII of the ASME Code the original test pressure must be at least twice the cargo tank design pressure.

(b) *Weld testing and inspection.* (1) Each cargo tank constructed in accordance with part UHT in Section VIII of the ASME Code must be subjected, after postweld heat treatment and hydrostatic tests, to a wet fluorescent magnetic particle inspection to be made on all welds in or on the cargo tank shell and heads both inside and out. The method of inspection must conform to appendix 6 in Section VIII of the ASME Code except that permanent magnets shall not be used.

(2) On cargo tanks of over 3,500 gallons water capacity other than those described in paragraph (b)(1) of this section unless fully radiographed, a test must be made of all welds in or on the shell and heads both inside and outside by either the wet fluorescent magnetic particle method conforming to appendix U in Section VIII of the ASME Code, liquid dye penetrant method, or ultrasonic testing in accordance with appendix 12 in Section VIII of the ASME Code. Permanent magnets must not be used to perform the magnetic particle inspection.

(c) All defects found shall be repaired, the cargo tanks shall then again be postweld heat treated, if such heat treatment was previously performed, and the repaired areas shall again be tested.

[Order 59–B, 30 FR 582, Jan. 16, 1965. Redesignated at 32 FR 5606, Apr. 5, 1967, and amended by Amdt. 178–7, 34 FR 18250, Nov. 14, 1969; Amdt. 178–99, 58 FR 51534, Oct. 1, 1993; Amdt. 178–118, 61 FR 51340, Oct. 1, 1996; 68 FR 75753, Dec. 31, 2003]

§ 178.337–17 Marking.

(a) *General.* Each cargo tank certified after October 1, 2004 must have a corrosion-resistant metal name plate (ASME Plate) and specification plate permanently attached to the cargo tank by brazing, welding, or other suitable means on the left side near the front, in a place accessible for inspection. If the specification plate is attached directly to the cargo tank wall by welding, it must be welded to the tank before the cargo tank is postweld heat treated.

(1) The plates must be legibly marked by stamping, embossing, or other means of forming letters into the metal of the plate, with the information required in paragraphs (b) and (c) of this section, in addition to that required by the ASME Code, in characters at least 3/16 inch high (parenthetical abbreviations may be used). All plates must be maintained in a legible condition.

(2) Each insulated cargo tank must have additional plates, as described, attached to the jacket in the location specified unless the specification plate is attached to the chassis and has the information required in paragraphs (b) and (c) of this section.

(3) The information required for both the name and specification plate may be displayed on a single plate. If the information required by this section is displayed on a plate required by the ASME, the information need not be repeated on the name and specification plates.

(4) The specification plate may be attached to the cargo tank motor vehicle chassis rail by brazing, welding, or other suitable means on the left side near the front head, in a place accessible for inspection. If the specification plate is attached to the chassis rail, then the cargo tank serial number assigned by the cargo tank manufacturer must be included on the plate.

(b) *Name plate.* The following information must be marked on the name plate in accordance with this section:

(1) DOT-specification number MC 331 (DOT MC 331).

(2) Original test date (Orig. Test Date).

(3) MAWP in psig.

(4) Cargo tank design temperature (Design Temp. Range) _____ °F to _____ °F.

(5) Nominal capacity (Water Cap.), in pounds.

(6) Maximum design density of lading (Max. Lading density), in pounds per gallon.

(7) Material specification number—shell (Shell matl, yyy***), where ''yyy'' is replaced by the alloy designation and ''***'' is replaced by the alloy type.

(8) Material specification number—heads (Head matl. yyy***), where ''yyy'' is replaced by the alloy designation and ''***'' by the alloy type.

(9) Minimum Thickness—shell (Min. Shell-thick), in inches. When minimum shell thicknesses are not the same for different areas, show (top____, side____, bottom____, in inches).

(10) Minimum thickness—heads (Min. heads thick.), in inches.

(11) Manufactured thickness—shell (Mfd. Shell thick.), top____, side____, bottom____, in inches. (Required when additional thickness is provided for corrosion allowance.)

(12) Manufactured thickness—heads (Mfd. Heads thick.), in inches. (Required when additional thickness is provided for corrosion allowance.)

(13) Exposed surface area, in square feet.

NOTE TO PARAGRAPH (b): When the shell and head materials are the same thickness, they may be combined, (Shell&head matl, yyy***).

(c) *Specification plate.* The following information must be marked on the specification plate in accordance with this section:

(1) Cargo tank motor vehicle manufacturer (CTMV mfr.).

(2) Cargo tank motor vehicle certification date (CTMV cert. date).

(3) Cargo tank manufacturer (CT mfr.).

(4) Cargo tank date of manufacture (CT date of mfr.), month and year.

(5) Maximum weight of lading (Max. Payload), in pounds

(6) Lining materials (Lining), if applicable.

(7) Heating system design pressure (Heating sys. press.), in psig, if applicable.

(8) Heating system design temperature (Heating sys. temp.), in °F, if applicable.

(9) Cargo tank serial number, assigned by cargo tank manufacturer (CT serial), if applicable.

NOTE 1 TO PARAGRAPH (c): See § 173.315(a) of this chapter regarding water capacity.

NOTE 2 TO PARAGRAPH (c): When the shell and head materials are the same thickness, they may be combined (Shell & head matl, yyy***).

(d) The design weight of lading used in determining the loading in §§ 178.337–3(b), 178.337–10(b) and (c), and 178.337–13(a) and (b), must be shown as the maximum weight of lading marking required by paragraph (c) of this section.

[68 FR 19280, Apr. 18, 2003; 68 FR 52370, Sept. 3, 2003, as amended at 68 FR 57633, Oct. 6, 2003]

§ 178.337–18 Certification.

(a) At or before the time of delivery, the cargo tank motor vehicle manufacturer must supply and the owner must obtain, a cargo tank motor vehicle manufacturer's data report as required by Section VIII of the ASME Code (IBR, see § 171.7 of this subchapter), and a certificate stating that the completed cargo tank motor vehicle conforms in all respects to Specification MC 331 and the ASME Code. The registration numbers of the manufacturer, the Design Certifying Engineer, and the Registered Inspector, as appropriate, must appear on the certificates (see subpart F, part 107 in subchapter A of this chapter).

(1) For each design type, the certificate must be signed by a responsible official of the manufacturer and a Design Certifying Engineer; and

(2) For each cargo tank motor vehicle, the certificate must be signed by a responsible official of the manufacturer and a Registered Inspector.

(3) When a cargo tank motor vehicle is manufactured in two or more stages, each manufacturer who performs a manufacturing function or portion thereof on the incomplete cargo tank motor vehicle must provide to the succeeding manufacturer, at or before the time of delivery, a certificate that states the function performed by the manufacturer, including any certificates received from previous manufacturers, Registered Inspectors, and Design Certifying Engineers.

(4) *Specification shortages.* When a cargo tank motor vehicle is manufactured in two or more stages, the manufacturer of the cargo tank must attach the name plate and specification plate as required by § 178.337–17(a) and (b) without the original date of certification stamped on the specification plate. Prior manufacturers must list the specification requirements that are not completed on the Certificate of Compliance. When the cargo tank motor vehicle is brought into full compliance with the applicable specification, the cargo tank motor vehicle manufacturer must have a Registered Inspector stamp the date of certification on the specification plate and issue a Certificate of Compliance to the owner of the cargo tank motor vehicle. The Certificate of Compliance must list the actions taken to bring the cargo tank motor vehicle into full compliance. In addition, the certificate must include the date of certification and the person (manufacturer, carrier or repair organization) accomplishing compliance.

(5) The certificate must state whether or not it includes certification that all valves, piping, and protective devices conform to the requirements of the specification. If it does not so certify, the installer of any such valve, piping, or device shall supply and the owner shall obtain a certificate asserting complete compliance with these specifications for such devices. The certificate, or certificates, will include sufficient sketches, drawings, and other information to indicate the location, make, model, and size of each valve and the arrangement of all piping associated with the cargo tank.

(6) The certificate must contain a statement indicating whether or not the cargo tank was postweld heat treated for anhydrous ammonia as specified in § 178.337–1(f).

(b) The owner shall retain the copy of the data report and certificates and related papers in his files throughout his ownership of the cargo tank motor vehicle and for at least one year thereafter; and in the event of change in ownership, retention by the prior owner of nonfading photographically reproduced copies will be deemed to satisfy this requirement. Each motor carrier using the cargo tank motor vehicle, if not the owner thereof, shall obtain a copy of the data report and certificate and retain them in his files during the time he uses the cargo tank motor vehicle and for at least one year thereafter.

[Order 59–B, 30 FR 583, Jan. 16, 1965. Redesignated at 32 FR 5606, Apr. 5, 1967]

EDITORIAL NOTE: For FEDERAL REGISTER citations affecting § 178.337–18, see the List of CFR Sections Affected, which appears in the Finding Aids section of the printed volume and at *www.fdsys.gov*.

§ 178.338 Specification MC–338; insulated cargo tank motor vehicle.

§ 178.338–1 General requirements.

(a) For the purposes of this section—

(1) *Design pressure* means the ''MAWP'' as used in Section VIII of the ASME Code (IBR, see § 171.7 of this subchapter), and is the gauge pressure at the top of the tank.

(2) *Design service temperature* means the coldest temperature for which the tank is suitable (see §§ 173.318 (a)(1) and (f) of this subchapter).

(b) Each cargo tank must consist of a suitably supported welded inner vessel enclosed within an outer shell or jacket, with insulation between the inner vessel and outer shell or jacket, and having piping, valves, supports and other appurtenances as specified in this subchapter. For the purpose of this specification, *tank* means inner vessel

and *jacket* means either the outer shell or insulation cover.

(c) Each tank must be designed, constructed, certified, and stamped in accordance with Section VIII of the ASME Code.

(d) The exterior surface of the tank must be insulated with a material compatible with the lading.

(1) Each cargo tank must have an insulation system that will prevent the tank pressure from exceeding the pressure relief valve set pressure within the specified holding time when the tank is loaded with the specific cryogenic liquid at the design conditions of—

(i) The specified temperature and pressure of the cryogenic liquid, and

(ii) The exposure of the filled cargo tank to an average ambient temperature of 85 °F.

(2) For a cargo tank used to transport oxygen, the insulation may not sustain combustion in a 99.5 percent oxygen atmosphere at atmospheric pressure when contacted with a continuously heated glowing platinum wire. The cargo tank must be marked in accordance with § 178.338–18(b)(7).

(3) Each vacuum-insulated cargo tank must be provided with a connection for a vacuum gauge to indicate the absolute pressure within the insulation space.

(e) The insulation must be completely covered by a metal jacket. The jacket or the insulation must be so constructed and sealed as to prevent moisture from coming into contact with the insulation (see § 173.318(a)(3) of this subchapter). Minimum metal thicknesses are as follows:

Type metal	Jacket evacuated		Jacket not evacuated	
	Gauge	Inches	Gauge	Inches
Stainless steel	18	0.0428	22	0.0269
Low carbon mild steel	12	0.0946	14	0.0677
Aluminum	.....	0.125	.....	0.1000

(f) An evacuated jacket must be in compliance with the following requirements:

(1) The jacket must be designed to sustain a minimum critical collapsing pressure of 30 psig.

(2) If the jacket also supports additional loads, such as the weight of the tank and lading, the combined stress, computed according to the formula in § 178.338–3(b), may not exceed 25 percent of the minimum specified tensile strength.

[Amdt. 178–77, 48 FR 27703, June 16, 1983, as amended at 49 FR 24316, June 12, 1984; Amdt. 178–104, 59 FR 49135, Sept. 26, 1994; 66 FR 45387, Aug. 28, 2001; 68 FR 75754, Dec. 31, 2003]

§ 178.338–2 Material.

(a) All material used in the construction of a tank and its appurtenances that may come in contact with the lading must be compatible with the lading to be transported. All material used for tank pressure parts must conform to the requirements in Section II of the ASME Code (IBR, see § 171.7 of this subchapter). All material used for evacuated jacket pressure parts must conform to the chemistry and steelmaking practices of one of the material specifications of Section II of the ASME Code or the following ASTM Specifications (IBR, see § 171.7 of this subchapter): A 242, A 441, A 514, A 572, A 588, A 606, A 633, A 715, A 1008/A 1008M, A 1011/A 1011M.

(b) All tie-rods, mountings, and other appurtenances within the jacket and all piping, fittings and valves must be of material suitable for use at the lowest temperature to be encountered.

(c) Impact tests are required on all tank materials, except materials that are excepted from impact testing by the ASME Code, and must be performed using the procedure prescribed in Section VIII of the ASME Code.

(d) The direction of final rolling of the shell material must be the circumferential orientation of the tank shell.

(e) Each tank constructed in accordance with part UHT in Section VIII of the ASME Code must be postweld heat treated as a unit after completion of all welds to the shell and heads. Other tanks must be postweld heat treated as required in Section VIII of the ASME Code. For all tanks the method must be as prescribed in the ASME Code. Welded attachments to pads may be made after postweld heat treatment.

(f) The fabricator shall record the heat and slab numbers and the certified Charpy impact values of each plate used in the tank on a sketch showing the location of each plate in the shell and heads of the tank. A copy of the sketch must be provided to the owner

of the cargo tank and a copy must be retained by the fabricator for at least five years and made available, upon request, to any duly identified representative of the Department.

(Approved by the Office of Management and Budget under control number 2137–0017)

[Amdt. 178–77, 48 FR 27703 and 27713, June 16, 1983, as amended at 49 FR 24316, June 12, 1984; 68 FR 19281, Apr. 18, 2003; 68 FR 75754, Dec. 31, 2003; 70 FR 34076, June 13, 2005]

§ 178.338–3 Structural integrity.

(a) *General requirements and acceptance criteria.* (1) Except as permitted in paragraph (d) of this section, the maximum calculated design stress at any point in the tank may not exceed the lesser of the maximum allowable stress value prescribed in section VIII of the ASME Code, or 25 percent of the tensile strength of the material used.

(2) The relevant physical properties of the materials used in each tank may be established either by a certified test report from the material manufacturer or by testing in conformance with a recognized national standard. In either case, the ultimate tensile strength of the material used in the design may not exceed 120 percent of the minimum ultimate tensile strength specified in either the ASME Code or the ASTM standard to which the material is manufactured.

(3) The maximum design stress at any point in the tank must be calculated separately for the loading conditions described in paragraphs (b), (c), and (d) of this section. Alternate test or analytical methods, or a combination thereof, may be used in lieu of the procedures described in paragraphs (b), (c), and (d) of this section, if the methods are accurate and verifiable.

(4) Corrosion allowance material may not be included to satisfy any of the design calculation requirements of this section.

(b) *Static design and construction.* (1) The static design and construction of each tank must be in accordance with appendix G in Section VIII of the ASME Code (IBR, see § 171.7 of this subchapter). The tank design must include calculation of stress due to the design pressure, the weight of lading, the weight of structures supported by the tank wall, and the effect of temperature gradients resulting from lading and ambient temperature extremes. When dissimilar materials are used, their thermal coefficients must be used in calculation of the thermal stresses.

(2) Stress concentrations in tension, bending, and torsion which occur at pads, cradles, or other supports must be considered in accordance with appendix G in Section VIII of the ASME Code.

(c) Stresses resulting from static and dynamic loadings, or a combination thereof, are not uniform throughout the cargo tank motor vehicle. The following is a simplified procedure for calculating the effective stress in the tank resulting from static and dynamic loadings. The effective stress (the maximum principal stress at any point) must be determined by the following formula:

$$S = 0.5\ (S_y + S_x) \pm (0.25(S_y - S_x)^2 + S_s2)^{0.5}$$

Where:

(1) S = effective stress at any given point under the most severe combination of static and dynamic loadings that can occur at the same time, in psi.

(2) S_y = circumferential stress generated by internal and external pressure when applicable, in psi.

(3) S_x = the net longitudinal stress, in psi, generated by the following loading conditions:

(i) The longitudinal tensile stress generated by internal pressure;

(ii) The tensile or compressive stress generated by the axial load resulting from a decelerative force applied independently to each suspension assembly at the road surface using applicable static loadings specified in § 178.338–13 (b);

(iii) The tensile or compressive stress generated by the bending moment resulting from a decelerative force applied independently to each suspension assembly at the road surface using applicable static loadings specified in § 178.338–13 (b);

(iv) The tensile or compressive stress generated by the axial load resulting from an accelerative force applied to the horizontal pivot of the fifth wheel supporting the vehicle using applicable static loadings specified in § 178.338–13 (b);

(v) The tensile or compressive stress generated by the bending moment resulting from an accelerative force applied to the horizontal pivot of the fifth wheel supporting the vehicle using applicable static loadings specified in § 178.338–13 (b); and

(vi) The tensile or compressive stress generated by a bending moment produced by a vertical force using applicable static loadings specified in § 178.338–13 (b).

(4) S_s = The following shear stresses that apply, in psi,: The vectorial sum of the applicable shear stresses in the plane under consideration, including direct shear generated by the static vertical loading; direct lateral and torsional shear generated by a lateral accelerative force applied at the road surface, using applicable static loads specified in § 178.338–13 (b)

(d) In order to account for stresses due to impact in an accident, the design calculations for the tank shell and heads must include the load resulting from the design pressure in combination with the dynamic pressure resulting from a longitudinal deceleration of ''2g''. For this loading condition the stress value used may not exceed the lesser of the yield strength or 75 percent of the ultimate tensile strength of the material of construction. For a cargo tank constructed of stainless steel, the maximum design stress may not exceed 75 percent of the ultimate tensile strength of the type steel used.

(e) The minimum thickness of the shell or heads of the tank must be 0.187 inch for steel and 0.270 inch for aluminum. However, the minimum thickness for steel may be 0.110 inches provided the cargo tank is:

(1) Vacuum insulated, or

(2) Double walled with a load bearing jacket designed to carry a proportionate amount of structural loads prescribed in this section.

(f) Where a tank support is attached to any part of the tank wall, the stresses imposed on the tank wall must meet the requirements in paragraph (a) of this section.

(g) The design, construction and installation of an attachment, appurtenance to the cargo tank or structural support member between the cargo tank and the vehicle or suspension component or accident protection device must conform to the following requirements:

(1) Structural members, the suspension subframe, accident protection structures and external circumferential reinforcement devices must be used as sites for attachment of appurtenances and other accessories to the cargo tank, when practicable.

(2) A lightweight attachment to the cargo tank wall such as a conduit clip, brakeline clip, skirting structure, lamp mounting bracket, or placard holder must be of a construction having lesser strength than the cargo tank wall materials and may not be more than 72 percent of the thickness of the material to which it is attached. The lightweight attachment may be secured directly to the cargo tank wall if the device is designed and installed in such a manner that, if damaged, it will not affect the lading retention integrity of the tank. A lightweight attachment must be secured to the cargo tank shell or head by a continuous weld or in such a manner as to preclude formation of pockets that may become sites for corrosion. Attachments meeting the requirements of this paragraph are not authorized for cargo tanks constructed under part UHT in Section VIII of the ASME Code.

(3) Except as prescribed in paragraphs (g)(1) and (g)(2) of this section, the welding of any appurtenance the cargo tank wall must be made by attachment of a mounting pad so that there will be no adverse effect upon the lading retention integrity of the cargo tank if any force less than that prescribed in paragraph (b)(1) of this section is applied from any direction. The thickness of the mounting pad may not be less than that of the shell or head to which it is attached, and not more than 1.5 times the shell or head thickness. However, a pad with a minimum thickness of 0.187 inch may be used when the shell or head thickness is over 0.187 inch. If weep holes or telltale holes are used, the pad must be drilled or punched at the lowest point before it is welded to the tank. Each pad must:

(i) Be fabricated from material determined to be suitable for welding to both the cargo tank material and the

material of the appurtenance or structural support member; a Design Certifying Engineer must make this determination considering chemical and physical properties of the materials and must specify filler material conforming to the requirements in Section IX of the ASME Code (IBR, see § 171.7 of this subchapter).

(ii) Be preformed to an inside radius no greater than the outside radius of the cargo tank at the attachment location.

(iii) Extend at least 2 inches in each direction from any point of attachment of an appurtenance or structural support member. This dimension may be measured from the center of the attached structural member.

(iv) Have rounded corners, or otherwise be shaped in a manner to minimize stress concentrations on the shell or head.

(v) Be attached by continuous fillet welding. Any fillet weld discontinuity may only be for the purpose of preventing an intersection between the fillet weld and a tank or jacket seam weld.

[Amdt. 178–89, 55 FR 37057, Sept. 7, 1990, as amended by Amdt. 178–89, 56 FR 27876, June 17, 1991; 56 FR 46354, Sept. 11, 1991; 68 FR 19281, Apr. 18, 2003; 68 FR 57633, Oct. 6, 2003; 68 FR 75754, Dec. 31, 2003]

§ 178.338–4 Joints.

(a) All joints in the tank, and in the jacket if evacuated, must be as prescribed in Section VIII of the ASME Code (IBR, see § 171.7 of this subchapter), except that a butt weld with one plate edge offset is not authorized.

(b) Welding procedure and welder performance tests must be made in accordance with Section IX of the ASME Code. Records of the qualification must be retained by the tank manufacturer for at least five years and must be made available, upon request, to any duly identified representative of the Department, or the owner of the cargo tank.

(c) All longitudinal welds in tanks and load bearing jackets must be located so as not to intersect nozzles or supports other than load rings and stiffening rings.

(d) Substructures must be properly fitted before attachment and the welding sequence must minimize stresses due to shrinkage of welds.

(e) Filler material containing more than 0.05 percent vanadium may not be used with quenched and tempered steel.

(f) All tank nozzle-to-shell and nozzle-to-head welds must be full penetration welds.

(Approved by the Office of Management and Budget under control number 2137–0017)

[Amdt. 178–77, 48 FR 27704 and 27713, June 16, 1983, as amended at 49 FR 24316, June 12, 1984; 68 FR 75754, Dec. 31, 2003]

§ 178.338–5 Stiffening rings.

(a) A tank is not required to be provided with stiffening rings, except as prescribed in Section VIII of the ASME Code (IBR, see § 171.7 of this subchapter).

(b) If a jacket is evacuated, it must be constructed in compliance with § 178.338–1(f). Stiffening rings may be used to meet these requirements.

[Amdt. 178–77, 48 FR 27704, June 16, 1983, as amended at 68 FR 75754, Dec. 31, 2003]

§ 178.338–6 Manholes.

(a) Each tank in oxygen service must be provided with a manhole as prescribed in Section VIII of the ASME Code (IBR, see § 171.7 of this subchapter).

(b) Each tank having a manhole must be provided with a means of entrance and exit through the jacket, or the jacket must be marked to indicate the manway location on the tank.

(c) A manhole with a bolted closure may not be located on the front head of the tank.

[Amdt. 178–77, 48 FR 27704, June 16, 1983, as amended at 49 FR 24316, June 12, 1984; 68 FR 75754, Dec. 31, 2003]

§ 178.338–7 Openings.

(a) The inlet to the liquid product discharge opening of each tank intended for flammable ladings must be at the bottom centerline of the tank.

(b) If the leakage of a single valve, except a pressure relief valve, pressure control valve, full trycock or gas phase manual vent valve, would permit loss of flammable material, an additional closure that is leak tight at the tank

design pressure must be provided outboard of such valve.

[Amdt. 178–77, 48 FR 27704, June 16, 1983]

§ 178.338–8 Pressure relief devices, piping, valves, and fittings.

(a) *Pressure relief devices.* Each tank pressure relief device must be designed, constructed, and marked in accordance with § 173.318(b) of this subchapter.

(b) *Piping, valves, and fittings.* (1) The burst pressure of all piping, pipe fittings, hoses and other pressure parts, except for pump seals and pressure relief devices, must be at least 4 times the design pressure of the tank. Additionally, the burst pressure may not be less than 4 times any higher pressure to which each pipe, pipe fitting, hose or other pressure part may be subjected to in service.

(2) Pipe joints must be threaded, welded or flanged. If threaded pipe is used, the pipe and fittings must be Schedule 80 weight or heavier. Malleable metals must be used in the construction of valves and fittings. Where copper tubing is permitted, joints shall be brazed or be of equally strong metal union type. The melting point of the brazing materials may not be lower than 1000 °F. The method of joining tubing may not reduce the strength of the tubing, such as by the cutting of threads.

(3) Each hose coupling must be designed for a pressure of at least 120 percent of the hose design pressure and so that there will be no leakage when connected.

(4) Piping must be protected from damage due to thermal expansion and contraction, jarring, and vibration. Slip joints are not authorized for this purpose.

(5) All piping, valves and fittings on a cargo tank must be proved free from leaks. This requirement is met when such piping, valves, and fittings have been tested after installation with gas or air and proved leak tight at not less than the design pressure marked on the cargo tank. This requirement is applicable to all hoses used in a cargo tank, except that hose may be tested before or after installation on the tank.

(6) Each valve must be suitable for the tank design pressure at the tank design service temperature.

(7) All fittings must be rated for the maximum tank pressure and suitable for the coldest temperature to which they will be subjected in actual service.

(8) All piping, valves, and fittings must be grouped in the smallest practicable space and protected from damage as required by § 178.338–10.

(9) When a pressure-building coil is used on a tank designed to handle oxygen or flammable ladings, the vapor connection to that coil must be provided with a valve or check valve as close to the tank shell as practicable to prevent the loss of vapor from the tank in case of damage to the coil. The liquid connection to that coil must also be provided with a valve.

[Amdt. 178–77, 48 FR 27704, June 16, 1983, as amended by Amdt. 178–89, 54 FR 25019, June 12, 1989]

§ 178.338–9 Holding time.

(a) ''Holding time'' is the time, as determined by testing, that will elapse from loading until the pressure of the contents, under equilibrium conditions, reaches the level of the lowest pressure control valve or pressure relief valve setting.

(b) *Holding time test.* (1) The test to determine holding time must be performed by charging the tank with a cryogenic liquid having a boiling point, at a pressure of one atmosphere, absolute, no lower than the design service temperature of the tank. The tank must be charged to its maximum permitted filling density with that liquid and stabilized to the lowest practical pressure, which must be equal to or less than the pressure to be used for loading. The cargo tank together with its contents must then be exposed to ambient temperature.

(2) The tank pressure and ambient temperature must be recorded at 3-hour intervals until the pressure level of the contents reaches the set-to-discharge pressure of the pressure control valve or pressure relief valve with the lowest setting. This total time lapse in hours represents the measured holding time at the actual average ambient temperature. This measured holding time for the test cryogenic liquid must be adjusted to an equivalent holding time for each cryogenic liquid that is

to be identified on or adjacent to the specification plate, at an average ambient temperature of 85 °F. This is the rated holding time (RHT). The marked rated holding time (MRHT) displayed on or adjacent to the specification plate (see § 178.338–18(c)(10)) may not exceed this RHT.

(c) *Optional test regimen.* (1) If more than one cargo tank is made to the same design, only one cargo tank must be subjected to the full holding time test at the time of manufacture. However, each subsequent cargo tank made to the same design must be performance tested during its first trip. The holding time determined in this test may not be less than 90 percent of the marked rated holding time. This test must be performed in accordance with §§ 173.318(g)(3) and 177.840(h) of this subchapter, regardless of the classification of the cryogenic liquid.

(2) *Same design.* The term ''same design'' as used in this section means cargo tanks made to the same design type. See § 178.320(a) for definition of ''design type''.

(3) For a cargo tank used in nonflammable cryogenic liquid service, in place of the holding time tests prescribed in paragraph (b) of this section, the marked rated holding time (MRHT) may be determined as follows:

(i) While the cargo tank is stationary, the heat transfer rate must be determined by measuring the normal evaporation rate (NER) of the test cryogenic liquid (preferably the lading, where feasible) maintained at approximately one atmosphere. The calculated heat transfer rate must be determined from:

$$q = [n(\Delta h)(85 - t_l)] / [t_s - t_f]$$

Where:

q = calculated heat transfer rate to cargo tank with lading, Btu/hr.

n = normal evaporation rate (NER), which is the rate of evaporation, determined by the test of a test cryogenic liquid in a cargo tank maintained at a pressure of approximately one atmosphere, absolute, lb/hr.

Δh = latent heat of vaporization of test fluid at test pressure, Btu/lb.

t_s = average temperature of outer shell during test, °F.

t_l = equilibrium temperature of lading at maximum loading pressure, °F.

t_f = equilibrium temperature of test fluid at one atmosphere, °F.

(ii) The rated holding time (RHT) must be calculated as follows:

$$RHT = [(U_2 - U_1) W] / q$$

Where:

RHT = rated holding time, in hours

U_1 and U_2 = internal energy for the combined liquid and vapor lading at the pressure offered for transportation, and the set pressure of the applicable pressure control valve or pressure relief valve, respectively, Btu/lb.

W = total weight of the combined liquid and vapor lading in the cargo tank, pounds.

q = calculated heat transfer rate to cargo tank with lading, Btu/hr.

(iii) The MRHT (see § 178.338–18(b)(9) of this subchapter) may not exceed the RHT.

[Amdt. 178–77, 48 FR 27704, June 16, 1983; 48 FR 50442, Nov. 1, 1983, as amended at 49 FR 24316, June 12, 1984; 49 FR 43965, Nov. 1, 1984; 59 FR 55173, Nov. 3, 1994; Amdt. 178–118, 61 FR 51340, Oct. 1, 1996; 68 FR 57634, Oct. 6, 2003; 71 FR 54397, Sept. 14, 2006]

§ 178.338–10 Accident damage protection.

(a) All valves, fittings, pressure relief devices and other accessories to the tank proper, which are not isolated from the tank by closed intervening shut-off valves or check valves, must be installed within the motor vehicle framework or within a suitable collision resistant guard or housing, and appropriate ventilation must be provided. Each pressure relief device must be protected so that in the event of the upset of the vehicle onto a hard surface, the device's opening will not be prevented and its discharge will not be restricted.

(b) Each protective device or housing, and its attachment to the vehicle structure, must be designed to withstand static loading in any direction that it may be loaded as a result of front, rear, side, or sideswipe collision, or the overturn of the vehicle. The static loading shall equal twice the loaded weight of the tank and attachments. A safety factor of four, based on the tensile strength of the material, shall be used. The protective device or the housing must be made of steel at least 3/16-inch thick, or other material of equivalent strength.

(c) *Rear-end tank protection.* Rear-end tank protections devices must:

(1) Consist of at least one rear bumper designed to protect the cargo tank and piping in the event of a rear-end collision. The rear-end tank protection device design must transmit the force of the collision directly to the chassis of the vehicle. The rear-end tank protection device and its attachments to the chassis must be designed to withstand a load equal to twice the weight of the loaded cargo tank and attachments, using a safety factor of four based on the tensile strength of the materials used, with such load being applied horizontally and parallel to the major axis of the cargo tank. The rear-end tank protection device dimensions must meet the requirements of § 393.86 of this title and extend vertically to a height adequate to protect all valves and fittings located at the rear of the cargo tank from damage that could result in loss of lading; or

(2) Conform to the requirements of § 178.345–8(b).

(d) Every part of the loaded cargo tank, and any associated valve, pipe, enclosure, or protective device or structure (exclusive of wheel assemblies), must be at least 14 inches above level ground.

[Amdt. 178–77, 48 FR 27705, June 16, 1983, as amended at 49 FR 24316, June 12, 1984; Amdt. 178–99, 58 FR 51534, Oct. 1, 1993; 68 FR 19282, Apr. 18, 2003; 68 FR 52371, Sept. 3, 2003]

§ 178.338–11 Discharge control devices.

(a) Excess-flow valves are not required.

(b) Each liquid filling and liquid discharge line must be provided with a shut-off valve located as close to the tank as practicable. Unless this valve is manually operable at the valve, the line must also have a manual shut-off valve.

(c) Except for a cargo tank that is used to transport argon, carbon dioxide, helium, krypton, neon, nitrogen, xenon, or mixtures thereof, each liquid filling and liquid discharge line must be provided with an on-vehicle remotely controlled self-closing shutoff valve.

(1) If pressure from a reservoir or from an engine-driven pump or compressor is used to open this valve, the control must be of fail-safe design and spring-biased to stop the admission of such pressure into the cargo tank. If the jacket is not evacuated, the seat of the valve must be inside the tank, in the opening nozzle or flange, or in a companion flange bolted to the nozzle. If the jacket is evacuated, the remotely controlled valve must be located as close to the tank as practicable.

(2) Each remotely controlled shut off valve must be provided with on-vehicle remote means of automatic closure, both mechanical and thermal. One means may be used to close more than one remotely controlled valve. Cable linkage between closures and remote operators must be corrosion resistant and effective in all types of environment and weather. The thermal means must consist of fusible elements actuated at a temperature not exceeding 121 °C (250 °F), or equivalent devices. The loading/unloading connection area is where hoses are connected to the permanent metal piping. The number and location of remote operators and thermal devices shall be as follows:

(i) On a cargo tank motor vehicle over 3,500 gallons water capacity, remote means of automatic closure must be installed at the ends of the cargo tank in at least two diagonally opposite locations. If the loading/unloading connection at the cargo tank is not in the general vicinity of one of these locations, at least one additional thermal device must be installed so that heat from a fire in the loading/unloading connection area will activate the emergency control system.

(ii) On a cargo tank motor vehicle of 3,500 gallons water capacity or less, at least one remote means of automatic closure must be installed on the end of the cargo tank farthest away from the loading/unloading connection area. At least one thermal device must be installed so that heat from a fire in the loading/unloading connection area will activate the emergency control system.

[Amdt. 178–77, 48 FR 27705, June 16, 1983, as amended by Amdt. 178–105, 59 FR 55173, Nov. 3, 1994; 60 FR 17402, Apr. 5, 1995; 68 FR 19282, Apr. 18, 2003]

§ 178.338–12 Shear section.

Unless the valve is located in a rear cabinet forward of and protected by the bumper (see § 178.338–10(c)), the design and installation of each valve, damage to which could result in loss of liquid or vapor, must incorporate a shear section or breakage groove adjacent to, and outboard of, the valve. The shear section or breakage groove must yield or break under strain without damage to the valve that would allow the loss of liquid or vapor. The protection specified in § 178.338–10 is not a substitute for a shear section or breakage groove.

[Amdt. 178–77, 49 FR 24316, June 12, 1984]

§ 178.338–13 Supporting and anchoring.

(a) On a cargo tank motor vehicle designed and constructed so that the cargo tank constitutes in whole or in part the structural member used in place of a motor vehicle frame, the cargo tank or the jacket must be supported by external cradles or by load rings. For a cargo tank mounted on a motor vehicle frame, the tank or jacket must be supported by external cradles, load rings, or longitudinal members. If cradles are used, they must subtend at least 120 degrees of the cargo tank circumference. The design calculations for the supports and load-bearing tank or jacket, and the support attachments must include beam stress, shear stress, torsion stress, bending moment, and acceleration stress for the loaded vehicle as a unit, using a safety factor of four, based on the tensile strength of the material, and static loading that uses the weight of the cargo tank and its attachments when filled to the design weight of the lading (see appendix G in Section VIII of the ASME Code) (IBR, see § 171.7 of this subchapter), multiplied by the following factors. The effects of fatigue must also be considered in the calculations. Minimum static loadings must be as follows:

(1) For a vacuum-insulated cargo tank—

(i) Vertically downward of 2;

(ii) Vertically upward of 2;

(iii) Longitudinally of 2; and

(iv) Laterally of 2.

(2) For any other insulated cargo tank—

(i) Vertically downward of 3;

(ii) Vertically upward of 2;

(iii) Longitudinally of 2; and

(iv) Laterally of 2.

(b) When a loaded tank is supported within the vacuum jacket by structural members, the design calculations for the tank and its structural members must be based on a safety factor of four and the tensile strength of the material at ambient temperature. The enhanced tensile strength of the material at actual operating temperature may be substituted for the tensile strength at ambient temperature to the extent recognized in the ASME Code for static loadings. Static loadings must take into consideration the weight of the tank and the structural members when the tank is filled to the design weight of lading (see Appendix G of Section VIII, Division 1 of the ASME Code), multiplied by the following factors. Static loadings must take into consideration the weight of the tank and the structural members when the tank is filled to the design weight of lading (see appendix G in Section VIII of the ASME Code), multiplied by the following factors. When load rings in the jacket are used for supporting the tank, they must be designed to carry the fully loaded tank at the specified static loadings, plus external pressure. Minimum static loadings must be as follows:

(1) Vertically downward of 2;

(2) Vertically upward of 1½;

(3) Longitudinally of 1½; and, (4) Laterally of 1½.

[68 FR 19282, Apr. 18, 2003, as amended at 68 FR 75754, Dec. 31, 2003]

§ 178.338–14 Gauging devices.

(a) *Liquid level gauging devices*. (1) Unless a cargo tank is intended to be filled by weight, it must be equipped with one or more gauging devices, which accurately indicate the maximum permitted liquid level at the loading pressure, in order to provide a minimum of two percent outage below the inlet of the pressure control valve or pressure relief valve at the condition of incipient opening of that valve. A fixed-length dip tube, a fixed trycock line, or a differential pressure liquid

level gauge must be used as the primary control for filling. Other gauging devices, except gauge glasses, may be used, but not as the primary control for filling.

(2) The design pressure of each liquid level gauging device must be at least that of the tank.

(3) If a fixed length dip tube or trycock line gauging device is used, it must consist of a pipe or tube of small diameter equipped with a valve at or near the jacket and extending into the cargo tank to a specified filling height. The fixed height at which the tube ends in the cargo tank must be such that the device will function when the liquid reaches the maximum level permitted in loading.

(4) The liquid level gauging device used as a primary control for filling must be designed and installed to accurately indicate the maximum filling level at the point midway of the tank both longitudinally and laterally.

(b) *Pressure gauges*. Each cargo tank must be provided with a suitable pressure gauge indicating the lading pressure and located on the front of the jacket so it can be read by the driver in the rear view mirror. Each gauge must have a reference mark at the cargo tank design pressure or the set pressure of the pressure relief valve or pressure control valve, whichever is lowest.

(c) *Orifices*. All openings for dip tube gauging devices and pressure gauges in flammable cryogenic liquid service must be restricted at or inside the jacket by orifices no larger than 0.060-inch diameter. Trycock lines, if provided, may not be greater than ½-inch nominal pipe size.

[Amdt. 178–77, 48 FR 27706, June 16, 1983, as amended at 49 FR 24317, June 12, 1984]

§ 178.338–15 Cleanliness.

A cargo tank constructed for oxygen service must be thoroughly cleaned to remove all foreign material in accordance with CGA G–4.1 (IBR, see § 171.7 of this subchapter). All loose particles from fabrication, such as weld beads, dirt, grinding wheel debris, and other loose materials, must be removed prior to the final closure of the manhole of the tank. Chemical or solvent cleaning with a material compatible with the intending lading must be performed to remove any contaminants likely to react with the lading.

[68 FR 75755, Dec. 31, 2003]

§ 178.338–16 Inspection and testing.

(a) *General*. The material of construction of a tank and its appurtenances must be inspected for conformance to Section VIII of the ASME Code (IBR, see § 171.7 of this subchapter). The tank must be subjected to either a hydrostatic or pneumatic test. The test pressure must be one and one-half times the sum of the design pressure, plus static head of lading, plus 101.3 kPa (14.7 psi) if subjected to external vacuum, except that for tanks constructed in accordance with Part UHT in Section VIII of the ASME Code the test pressure must be twice the design pressure.

(b) *Additional requirements for pneumatic test*. A pneumatic test may be used in place of the hydrostatic test. Due regard for protection of all personnel should be taken because of the potential hazard involved in a pneumatic test. The pneumatic test pressure in the tank must be reached by gradually increasing the pressure to one-half of the test pressure. Thereafter, the test pressure must be increased in steps of approximately one-tenth of the test pressure until the required test pressure has been reached. Then the pressure must be reduced to a value equal to four-fifths of the test pressure and held for a sufficient time to permit inspection of the cargo tank for leaks.

(c) *Weld inspection*. All tank shell or head welds subject to pressure shall be radiographed in accordance with Section VIII of the ASME Code. A tank which has been subjected to inspection by the magnetic particle method, the liquid penetrant method, or any method involving a material deposit on the interior tank surface, must be cleaned to remove any such residue by scrubbing or equally effective means, and all such residue and cleaning solution must be removed from the tank prior to final closure of the tank.

(d) *Defect repair*. All cracks and other defects must be repaired as prescribed in Section VIII of the ASME Code. The welder and the welding procedure must be qualified in accordance with Section

IX of the ASME Code (IBR, see § 171.7 of this subchapter). After repair, the tank must again be postweld heat-treated, if such heat treatment was previously performed, and the repaired areas must be retested.

(e) Verification must be made of the interior cleanliness of a tank constructed for oxygen service by means that assure that all contaminants that are likely to react with the lading have been removed as required by § 178.338–15.

[Amdt. 178–77, 48 FR 27706, June 16, 1983, as amended at 49 FR 24317, June 12, 1984; 49 FR 42736, Oct. 24, 1984; 68 FR 75755, Dec. 31, 2003]

§ 178.338–17 Pumps and compressors.

(a) *Liquid pumps and gas compressors*, if used, must be of suitable design, adequately protected against breakage by collision, and kept in good condition. They may be driven by motor vehicle power take-off or other mechanical, electrical, or hydraulic means. Unless they are of the centrifugal type, they shall be equipped with suitable pressure actuated by-pass valves permitting flow from discharge to suction to the tank.

(b) A valve or fitting made of aluminum with internal rubbing or abrading aluminum parts that may come in contact with oxygen (cryogenic liquid) may not be installed on any cargo tank used to transport oxygen (cryogenic liquid) unless the parts are anodized in accordance with ASTM B 580 (IBR, see § 171.7 of this subchapter).

[Amdt. 178–89, 54 FR 25020, June 12, 1989, as amended at 55 FR 37058, Sept. 7, 1990; 67 FR 61016, Sept. 27, 2002; 68 FR 75755, Dec. 31, 2003]

§ 178.338–18 Marking.

(a) *General*. Each cargo tank certified after October 1, 2004 must have a corrosion-resistant metal name plate (ASME Plate) and specification plate permanently attached to the cargo tank by brazing, welding, or other suitable means on the left side near the front, in a place accessible for inspection. If the specification plate is attached directly to the cargo tank wall by welding, it must be welded to the tank before the cargo tank is postweld heat treated.

(1) The plates must be legibly marked by stamping, embossing, or other means of forming letters into the metal of the plate, with the information required in paragraphs (b) and (c) of this section, in addition to that required by Section VIII of the ASME Code (IBR, see § 171.7 of this subchapter), in characters at least 3/16 inch high (parenthetical abbreviations may be used). All plates must be maintained in a legible condition.

(2) Each insulated cargo tank must have additional plates, as described, attached to the jacket in the location specified unless the specification plate is attached to the chassis and has the information required in paragraphs (b) and (c) of this section.

(3) The information required for both the name and specification plate may be displayed on a single plate. If the information required by this section is displayed on a plate required by Section VIII of the ASME Code, the information need not be repeated on the name and specification plates.

(4) The specification plate may be attached to the cargo tank motor vehicle chassis rail by brazing, welding, or other suitable means on the left side near the front head, in a place accessible for inspection. If the specification plate is attached to the chassis rail, then the cargo tank serial number assigned by the cargo tank manufacturer must be included on the plate.

(b) *Name plate*. The following information must be marked on the name plate in accordance with this section:

(1) DOT-specification number MC 338 (DOT MC 338).

(2) Original test date (Orig, Test Date).

(3) MAWP in psig.

(4) Cargo tank test pressure (Test P), in psig.

(5) Cargo tank design temperature (Design Temp. Range) ____ °F to ____ °F.

(6) Nominal capacity (Water Cap.), in pounds.

(7) Maximum design density of lading (Max. Lading density), in pounds per gallon.

(8) Material specification number—shell (Shell matl, yyy * * *), where ''yyy'' is replaced by the alloy designation and ''* * *'' is replaced by the alloy type.

(9) Material specification number—heads (Head matl. yyy * * *), where ''yyy'' is replaced by the alloy designation and ''* * *'' by the alloy type.

NOTE: When the shell and heads materials are the same thickness, they may be combined, (Shell & head matl, yyy * * *).

(10) Weld material (Weld matl.).

(11) Minimum Thickness-shell (Min. Shell-thick), in inches. When minimum shell thicknesses are not the same for different areas, show (top ____, side ____, bottom ____, in inches).

(12) Minimum thickness-heads (Min heads thick.), in inches.

(13) Manufactured thickness-shell (Mfd. Shell thick.), top ____, side ____, bottom ____, in inches. (Required when additional thickness is provided for corrosion allowance.)

(14) Manufactured thickness-heads (Mfd. Heads thick.), in inches. (Required when additional thickness is provided for corrosion allowance.)

(15) Exposed surface area, in square feet.

(c) *Specification plate.* The following information must be marked on the specification plate in accordance with this section:

(1) Cargo tank motor vehicle manufacturer (CTMV mfr.).

(2) Cargo tank motor vehicle certification date (CTMV cert. date).

(3) Cargo tank manufacturer (CT mfr.).

(4) Cargo tank date of manufacture (CT date of mfr.), month and year.

(5) Maximum weight of lading (Max. Payload), in pounds.

(6) Maximum loading rate in gallons per minute (Max. Load rate, GPM).

(7) Maximum unloading rate in gallons per minute (Max Unload rate).

(8) Lining materials (Lining), if applicable.

(9) ''Insulated for oxygen service'' or ''Not insulated for oxygen service'' as appropriate.

(10) Marked rated holding time for at least one cryogenic liquid, in hours, and the name of that cryogenic liquid (MRHT ____ hrs, name of cryogenic liquid). Marked rated holding marking for additional cryogenic liquids may be displayed on or adjacent to the specification plate.

(11) Cargo tank serial number (CT serial), as assigned by cargo tank manufacturer, if applicable.

NOTE 1 TO PARAGRAPH (c): See § 173.315(a) of this chapter regarding water capacity.

NOTE 2 TO PARAGRAPH (c): When the shell and head materials are the same thickness, they may be combined (Shell & head matl, yyy***).

(d) The design weight of lading used in determining the loading in §§ 178.338–3 (b), 178.338–10 (b) and (c), and 178.338–13 (b), must be shown as the maximum weight of lading marking required by paragraph (c) of this section.

[68 FR 19283, Apr. 18, 2003, as amended at 68 FR 57634, Oct. 6, 2003; 68 FR 75755, Dec. 31, 2003]

§ 178.338–19 Certification.

(a) At or before the time of delivery, the manufacturer of a cargo tank motor vehicle shall furnish to the owner of the completed vehicle the following:

(1) The tank manufacturer's data report as required by the ASME Code (IBR, see § 171.7 of this subchapter), and a certificate bearing the manufacturer's vehicle serial number stating that the completed cargo tank motor vehicle conforms to all applicable requirements of Specification MC 338, including Section VIII of the ASME Code (IBR, see § 171.7 of this subchapter) in effect on the date (month, year) of certification. The registration numbers of the manufacturer, the Design Certifying Engineer, and the Registered Inspector, as appropriate, must appear on the certificates (see subpart F, part 107 in subchapter B of this chapter).

(2) A photograph, pencil rub, or other facsimile of the plates required by paragraphs (a) and (b) of § 178.338-18.

(b) In the case of a cargo tank vehicle manufactured in two or more stages, each manufacturer who performs a manufacturing operation on the incomplete vehicle or portion thereof shall furnish to the succeeding manufacturer, at or before the time of delivery, a certificate covering the particular operation performed by that manufacturer, and any certificates received from previous manufacturers, Registered Inspectors, and Design Certifying Engineers. The certificates must include sufficient sketches, drawings,

and other information to indicate the location, make, model and size of each valve and the arrangement of all piping associated with the tank. Each certificate must be signed by an official of the manufacturing firm responsible for the portion of the complete cargo tank vehicle represented thereby, such as basic tank fabrication, insulation, jacket, or piping. The final manufacturer shall furnish the owner with all certificates, as well as the documents required by paragraph (a) of this section.

(c) The owner shall retain the data report, certificates, and related papers throughout his ownership of the cargo tank. In the event of change of ownership, the prior owner shall retain nonfading photographically reproduced copies of these documents for at least one year. Each operator using the cargo tank vehicle, if not the owner thereof, shall obtain a copy of the data report and the certificate or certificates and retain them during the time he uses the cargo tank and for at least one year thereafter.

(Approved by the Office of Management and Budget under control number 2137–0017)

[Amdt. 178–77, 48 FR 27707 and 27713, June 16, 1983, as amended by Amdt. 178–89, 55 FR 37058, Sept. 7, 1990; Amdt. 178–99, 58 FR 51534, Oct. 1, 1993; 62 FR 51561, Oct. 1, 1997; 68 FR 75755, Dec. 31, 2003]

§§ 178.340–178.343 [Reserved]

§ 178.345 General design and construction requirements applicable to Specification DOT 406 (§ 178.346), DOT 407 (§ 178.347), and DOT 412 (§ 178.348) cargo tank motor vehicles.

§ 178.345–1 General requirements.

(a) Specification DOT 406, DOT 407 and DOT 412 cargo tank motor vehicles must conform to the requirements of this section in addition to the requirements of the applicable specification contained in §§ 178.346, 178.347 or 178.348.

(b) All specification requirements are minimum requirements.

(c) *Definitions*. See § 178.320(a) for the definition of certain terms used in §§ 178.345, 178.346, 178.347, and 178.348. In addition, the following definitions apply to §§ 178.345, 178.346, 178.347, and 178.348:

Appurtenance means any cargo tank accessory attachment that has no lading retention or containment function and provides no structural support to the cargo tank.

Baffle means a non-liquid-tight transverse partition device that deflects, checks or regulates fluid motion in a tank.

Bulkhead means a liquid-tight transverse closure at the ends of or between cargo tanks.

Charging line means a hose, tube, pipe, or similar device used to pressurize a tank with material other than the lading.

Companion flange means one of two mating flanges where the flange faces are in contact or separated only by a thin leak sealing gasket and are secured to one another by bolts or clamps.

Connecting structure means the structure joining two cargo tanks.

Constructed and certified in conformance with the ASME Code means the cargo tank is constructed and stamped in accordance with the ASME Code, and is inspected and certified by an Authorized Inspector.

Constructed in accordance with the ASME Code means the cargo tank is constructed in accordance with the ASME Code with the authorized exceptions (see §§ 178.346, 178.347, and 178.348) and is inspected and certified by a Registered Inspector.

External self-closing stop-valve means a self-closing stop-valve designed so that the self-stored energy source is located outside the cargo tank and the welded flange.

Extreme dynamic loading means the maximum single-acting loading a cargo tank motor vehicle may experience during its expected life, excluding accident loadings.

Flange means the structural ring for guiding or attachment of a pipe or fitting with another flange (companion flange), pipe, fitting or other attachment.

Inspection pressure means the pressure used to determine leak tightness of the cargo tank when testing with pneumatic pressure.

Internal self-closing stop-valve means a self-closing stop-valve designed so that the self-stored energy source is located

inside the cargo tank or cargo tank sump, or within the welded flange, and the valve seat is located within the cargo tank or within one inch of the external face of the welded flange or sump of the cargo tank.

Lading means the hazardous material contained in a cargo tank.

Loading/unloading connection means the fitting in the loading/unloading line farthest from the loading/unloading outlet to which the loading/unloading hose or device is attached.

Loading/unloading outlet means the cargo tank outlet used for normal loading/unloading operations.

Loading/unloading stop-valve means the stop valve farthest from the cargo tank loading/unloading outlet to which the loading/unloading connection is attached.

MAWP. See § 178.320(a).

Multi-specification cargo tank motor vehicle means a cargo tank motor vehicle equipped with two or more cargo tanks fabricated to more than one cargo tank specification.

Normal operating loading means the loading a cargo tank motor vehicle may be expected to experience routinely in operation.

Nozzle means the subassembly consisting of a pipe or tubular section with or without a welded or forged flange on one end.

Outlet means any opening in the shell or head of a cargo tank, (including the means for attaching a closure), except that the following are not outlets: A threaded opening securely closed during transportation with a threaded plug or a threaded cap, a flanged opening securely closed during transportation with a bolted or welded blank flange, a manhole, or gauging devices, thermometer wells, and safety relief devices.

Outlet stop-valve means the stop-valve at the cargo tank loading/unloading outlet.

Pipe coupling means a fitting with internal threads on both ends.

Rear bumper means the structure designed to prevent a vehicle or object from under-riding the rear of a motor vehicle. See § 393.86 of this title.

Rear-end tank protection device means the structure designed to protect a cargo tank and any lading retention piping or devices in case of a rear end collision.

Sacrificial device means an element, such as a shear section, designed to fail under a load in order to prevent damage to any lading retention part or device. The device must break under strain at no more than 70 percent of the strength of the weakest piping element between the cargo tank and the *sacrificial device*. Operation of the *sacrificial device* must leave the remaining piping and its attachment to the cargo tank intact and capable of retaining lading.

Self-closing stop-valve means a stop-valve held in the closed position by means of self-stored energy, which opens only by application of an external force and which closes when the external force is removed.

Shear section means a sacrificial device fabricated in such a manner as to abruptly reduce the wall thickness of the adjacent piping or valve material by at least 30 percent.

Shell means the circumferential portion of a cargo tank defined by the basic design radius or radii excluding the closing heads.

Stop-valve means a valve that stops the flow of lading.

Sump means a protrusion from the bottom of a cargo tank shell designed to facilitate complete loading and unloading of lading.

Tank means a container, consisting of a shell and heads, that forms a pressure tight vessel having openings designed to accept pressure tight fittings or closures, but excludes any appurtenances, reinforcements, fittings, or closures.

Test pressure means the pressure to which a tank is subjected to determine pressure integrity.

Toughness of material means the capability of a material to absorb the energy represented by the area under the stress strain curve (indicating the energy absorbed per unit volume of the material) up to the point of rupture.

Vacuum cargo tank means a cargo tank that is loaded by reducing the pressure in the cargo tank to below atmospheric pressure.

Variable specification cargo tank means a cargo tank that is constructed in accordance with one specification,

but which may be altered to meet another specification by changing relief device, closures, lading discharge devices, and other lading retention devices.

Void means the space between tank heads or bulkheads and a connecting structure.

Welded flange means a flange attached to the tank by a weld joining the tank shell to the cylindrical outer surface of the flange, or by a fillet weld joining the tank shell to a flange shaped to fit the shell contour.

(d) A manufacturer of a cargo tank must hold a current ASME certificate of authorization and must be registered with the Department in accordance with part 107, subpart F of this chapter.

(e) All construction must be certified by an Authorized Inspector or by a Registered Inspector as applicable to the cargo tank.

(f) Each cargo tank must be designed and constructed in conformance with the requirements of the applicable cargo tank specification. Each DOT 412 cargo tank with a ''MAWP'' greater than 15 psig, and each DOT 407 cargo tank with a maximum allowable working pressure greater than 35 psig must be ''constructed and certified in conformance with Section VIII of the ASME Code'' (IBR, see § 171.7 of this subchapter) except as limited or modified by the applicable cargo tank specification. Other cargo tanks must be ''constructed in accordance with Section VIII of the ASME Code,'' except as limited or modified by the applicable cargo tank specification.

(g) Requirements relating to parts and accessories on motor vehicles, which are contained in part 393 of the Federal Motor Carrier Safety Regulations of this title, are incorporated into these specifications.

(h) Any additional requirements prescribed in part 173 of this subchapter that pertain to the transportation of a specific lading are incorporated into these specifications.

(i) *Cargo tank motor vehicle composed of multiple cargo tanks.* (1) A cargo tank motor vehicle composed of more than one cargo tank may be constructed with the cargo tanks made to the same specification or to different specifications. Each cargo tank must conform in all respects with the specification for which it is certified.

(2) The strength of the connecting structure joining multiple cargo tanks in a cargo tank motor vehicle must meet the structural design requirements in § 178.345–3. Any void within the connecting structure must be equipped with a drain located on the bottom centerline that is accessible and kept open at all times. For carbon steel, self-supporting cargo tanks, the drain configuration may consist of a single drain of at least 1.0 inch diameter, or two or more drains of at least 0.5 inch diameter, 6.0 inches apart, one of which is located as close to the bottom centerline as practicable. Vapors trapped in a void within the connecting structure must be allowed to escape to the atmosphere either through the drain or a separate vent.

(j) *Variable specification cargo tank.* A cargo tank that may be physically altered to conform to another cargo tank specification must have the required physical alterations to convert from one specification to another clearly indicated on the variable specification plate.

[Amdt. 178–89, 54 FR 25020, June 12, 1989, as amended at 55 FR 37058, Sept. 7, 1990; Amdt. 178–105, 59 FR 55173, Nov. 3, 1994; Amdt. 178–118, 61 FR 51340, Oct. 1, 1996; 66 FR 45387, 45389, Aug. 28, 2001; 68 FR 19283, Apr. 18, 2003; 68 FR 52371, Sept. 3, 2003; 68 FR 75755, Dec. 31, 2003; 70 FR 56099, Sept. 23, 2005; 76 FR 43532, July 20, 2011]

§ 178.345–2 Material and material thickness.

(a) All material for shell, heads, bulkheads, and baffles must conform to Section II of the ASME Code (IBR, see § 171.7 of this subchapter) except as follows:

(1) The following steels are also authorized for cargo tanks ''constructed in accordance with the ASME Code'', Section VIII.

ASTM A 569
ASTM A 570
ASTM A 572
ASTM A 622
ASTM A 656
ASTM A 715
ASTM A 1008/ A 1008M, ASTM A 1011/A 1011M

(2) Aluminum alloys suitable for fusion welding and conforming with the

0, H32 or H34 tempers of one of the following ASTM specifications may be used for cargo tanks ''constructed in accordance with the ASME Code'':

ASTM B–209 Alloy 5052
ASTM B–209 Alloy 5086
ASTM B–209 Alloy 5154
ASTM B–209 Alloy 5254
ASTM B–209 Alloy 5454
ASTM B–209 Alloy 5652

All heads, bulkheads and baffles must be of 0 temper (annealed) or stronger tempers. All shell materials shall be of H 32 or H 34 tempers except that the lower ultimate strength tempers may be used if the minimum shell thicknesses in the tables are increased in inverse proportion to the lesser ultimate strength.

(b) *Minimum thickness.* The minimum thickness for the shell and heads (or baffles and bulkheads when used as tank reinforcement) must be no less than that determined under criteria for minimum thickness specified in § 178.320(a).

(c) *Corrosion or abrasion protection.* When required by 49 CFR part 173 for a particular lading, a cargo tank or a part thereof, subject to thinning by corrosion or mechanical abrasion due to the lading, must be protected by providing the tank or part of the tank with a suitable increase in thickness of material, a lining or some other suitable method of protection.

(1) *Corrosion allowance.* Material added for corrosion allowance need not be of uniform thickness if different rates of attack can reasonably be expected for various areas of the cargo tank.

(2) *Lining.* Lining material must consist of a nonporous, homogeneous material not less elastic than the parent metal and substantially immune to attack by the lading. The lining material must be bonded or attached by other appropriate means to the cargo tank wall and must be imperforate when applied. Any joint or seam in the lining must be made by fusing the materials together, or by other satisfactory means.

[Amdt. 178–89, 54 FR 25021, June 12, 1989, as amended at 55 FR 37059, Sept. 7, 1990; 56 FR 27876, June 17, 1991; Amdt. 178–97, 57 FR 45465, Oct. 1, 1992; Amdt. 178–118, 61 FR 51341, Oct. 1, 1996; 68 FR 19283, Apr. 18, 2003; 68 FR 75755, Dec. 31, 2003; 70 FR 34076, June 13, 2005]

§ 178.345–3 Structural integrity.

(a) *General requirements and acceptance criteria.* (1) The maximum calculated design stress at any point in the cargo tank wall may not exceed the maximum allowable stress value prescribed in Section VIII of the ASME Code (IBR, see § 171.7 of this subchapter), or 25 percent of the tensile strength of the material used at design conditions.

(2) The relevant physical properties of the materials used in each cargo tank may be established either by a certified test report from the material manufacturer or by testing in conformance with a recognized national standard. In either case, the ultimate tensile strength of the material used in the design may not exceed 120 percent of the minimum ultimate tensile strength specified in either the ASME Code or the ASTM standard to which the material is manufactured.

(3) The maximum design stress at any point in the cargo tank must be calculated separately for the loading conditions described in paragraphs (b) and (c) of this section. Alternate test or analytical methods, or a combination thereof, may be used in place of the procedures described in paragraphs (b) and (c) of this section, if the methods are accurate and verifiable. TTMA RP 96–01, Structural Integrity of DOT 406, DOT 407, and DOT 412 Cylindrical Cargo Tanks, may be used as guidance in performing the calculations.

(4) Corrosion allowance material may not be included to satisfy any of the design calculation requirements of this section.

(b) *ASME Code design and construction.* The static design and construction of each cargo tank must be in accordance with Section VIII of the ASME Code. The cargo tank design must include calculation of stresses generated by the MAWP, the weight of the lading, the weight of structures

supported by the cargo tank wall and the effect of temperature gradients resulting from lading and ambient temperature extremes. When dissimilar materials are used, their thermal coefficients must be used in the calculation of thermal stresses.

(1) Stress concentrations in tension, bending and torsion which occur at pads, cradles, or other supports must be considered in accordance with appendix G in Section VIII of the ASME Code.

(2) Longitudinal compressive buckling stress for ASME certified vessels must be calculated using paragraph UG–23(b) in Section VIII of the ASME Code. For cargo tanks not required to be certified in accordance with the ASME Code, compressive buckling stress may be calculated using alternative analysis methods which are accurate and verifiable. When alternative methods are used, calculations must include both the static loads described in this paragraph and the dynamic loads described in paragraph (c) of this section.

(3) Cargo tank designers and manufacturers must consider all of the conditions specified in §173.33(c) of this subchapter when matching a cargo tank's performance characteristic to the characteristic of each lading transported.

(c) *Shell design*. Shell stresses resulting from static or dynamic loadings, or combinations thereof, are not uniform throughout the cargo tank motor vehicle. The vertical, longitudinal, and lateral normal operating loadings can occur simultaneously and must be combined. The vertical, longitudinal and lateral extreme dynamic loadings occur separately and need not be combined.

(1*) Normal operating loadings*. The following procedure addresses stress in the cargo tank shell resulting from normal operating loadings. The effective stress (the maximum principal stress at any point) must be determined by the following formula:

$$S = 0.5(S_y + S_X) \pm [0.25(S_y - S_X)^2 + SS^2]^{0.5}$$

Where:

(i) S = effective stress at any given point under the combination of static and normal operating loadings that can occur at the same time, in psi.

(ii) S_y = circumferential stress generated by the MAWP and external pressure, when applicable, plus static head, in psi.

(iii) S_x = The following net longitudinal stress generated by the following static and normal operating loading conditions, in psi:

(A) The longitudinal stresses resulting from the MAWP and external pressure, when applicable, plus static head, in combination with the bending stress generated by the static weight of the fully loaded cargo tank motor vehicle, all structural elements, equipment and appurtenances supported by the cargo tank wall;

(B) The tensile or compressive stress resulting from normal operating longitudinal acceleration or deceleration. In each case, the forces applied must be 0.35 times the vertical reaction at the suspension assembly, applied at the road surface, and as transmitted to the cargo tank wall through the suspension assembly of a trailer during deceleration; or the horizontal pivot of the truck tractor or converter dolly fifth wheel, or the drawbar hinge on the fixed dolly during acceleration; or anchoring and support members of a truck during acceleration and deceleration, as applicable. The vertical reaction must be calculated based on the static weight of the fully loaded cargo tank motor vehicle, all structural elements, equipment and appurtenances supported by the cargo tank wall. The following loadings must be included:

(*1*) The axial load generated by a decelerative force;

(*2*) The bending moment generated by a decelerative force;

(*3*) The axial load generated by an accelerative force; and

(*4*) The bending moment generated by an accelerative force; and

(C) The tensile or compressive stress generated by the bending moment resulting from normal operating vertical accelerative force equal to 0.35 times the vertical reaction at the suspension assembly of a trailer; or the horizontal pivot of the upper coupler (fifth wheel) or turntable; or anchoring and support members of a truck, as applicable. The vertical reaction must be calculated

based on the static weight of the fully loaded cargo tank motor vehicle, all structural elements, equipment and appurtenances supported by the cargo tank wall.

(iv) S_S = The following shear stresses generated by the following static and normal operating loading conditions, in psi:

(A) The static shear stress resulting from the vertical reaction at the suspension assembly of a trailer, and the horizontal pivot of the upper coupler (fifth wheel) or turntable; or anchoring and support members of a truck, as applicable. The vertical reaction must be calculated based on the static weight of the fully loaded cargo tank motor vehicle, all structural elements, equipment and appurtenances supported by the cargo tank wall;

(B) The vertical shear stress generated by a normal operating accelerative force equal to 0.35 times the vertical reaction at the suspension assembly of a trailer; or the horizontal pivot of the upper coupler (fifth wheel) or turntable; or anchoring and support members of a truck, as applicable. The vertical reaction must be calculated based on the static weight of the fully loaded cargo tank motor vehicle, all structural elements, equipment and appurtenances supported by the cargo tank wall;

(C) The lateral shear stress generated by a normal operating lateral accelerative force equal to 0.2 times the vertical reaction at each suspension assembly of a trailer, applied at the road surface, and as transmitted to the cargo tank wall through the suspension assembly of a trailer, and the horizontal pivot of the upper coupler (fifth wheel) or turntable; or anchoring and support members of a truck, as applicable. The vertical reaction must be calculated based on the static weight of the fully loaded cargo tank motor vehicle, all structural elements, equipment and appurtenances supported by the cargo tank wall; and

(D) The torsional shear stress generated by the same lateral forces as described in paragraph (c)(1)(iv)(C) of this section.

(2) *Extreme dynamic loadings.* The following procedure addresses stress in the cargo tank shell resulting from extreme dynamic loadings. The effective stress (the maximum principal stress at any point) must be determined by the following formula:

$$S = 0.5(S_y + S_x) \pm [0.25(S_y - S_x)^2 + S_S^2]^{0.5}$$

Where:

(i) S = effective stress at any given point under a combination of static and extreme dynamic loadings that can occur at the same time, in psi.

(ii) S_y = circumferential stress generated by MAWP and external pressure, when applicable, plus static head, in psi.

(iii) S_x = the following net longitudinal stress generated by the following static and extreme dynamic loading conditions, in psi:

(A) The longitudinal stresses resulting from the MAWP and external pressure, when applicable, plus static head, in combination with the bending stress generated by the static weight of the fully loaded cargo tank motor vehicle, all structural elements, equipment and appurtenances supported by the tank wall;

(B) The tensile or compressive stress resulting from extreme longitudinal acceleration or deceleration. In each case the forces applied must be 0.7 times the vertical reaction at the suspension assembly, applied at the road surface, and as transmitted to the cargo tank wall through the suspension assembly of a trailer during deceleration; or the horizontal pivot of the truck tractor or converter dolly fifth wheel, or the drawbar hinge on the fixed dolly during acceleration; or the anchoring and support members of a truck during acceleration and deceleration, as applicable. The vertical reaction must be calculated based on the static weight of the fully loaded cargo tank motor vehicle, all structural elements, equipment and appurtenances supported by the cargo tank wall. The following loadings must be included:

(*1*) The axial load generated by a decelerative force;

(*2*) The bending moment generated by a decelerative force;

(*3*) The axial load generated by an accelerative force; and

(*4*) The bending moment generated by an accelerative force; and

(C) The tensile or compressive stress generated by the bending moment resulting from an extreme vertical accelerative force equal to 0.7 times the vertical reaction at the suspension assembly of a trailer, and the horizontal pivot of the upper coupler (fifth wheel) or turntable; or the anchoring and support members of a truck, as applicable. The vertical reaction must be calculated based on the static weight of the fully loaded cargo tank motor vehicle, all structural elements, equipment and appurtenances supported by the cargo tank wall.

(iv) S_S = The following shear stresses generated by static and extreme dynamic loading conditions, in psi:

(A) The static shear stress resulting from the vertical reaction at the suspension assembly of a trailer, and the horizontal pivot of the upper coupler (fifth wheel) or turntable; or anchoring and support members of a truck, as applicable. The vertical reaction must be calculated based on the static weight of the fully loaded cargo tank motor vehicle, all structural elements, equipment and appurtenances supported by the cargo tank wall;

(B) The vertical shear stress generated by an extreme vertical accelerative force equal to 0.7 times the vertical reaction at the suspension assembly of a trailer, and the horizontal pivot of the upper coupler (fifth wheel) or turntable; or anchoring and support members of a truck, as applicable. The vertical reaction must be calculated based on the static weight of the fully loaded cargo tank motor vehicle, all structural elements, equipment and appurtenances supported by the cargo tank wall;

(C) The lateral shear stress generated by an extreme lateral accelerative force equal to 0.4 times the vertical reaction at the suspension assembly of a trailer, applied at the road surface, and as transmitted to the cargo tank wall through the suspension assembly of a trailer, and the horizontal pivot of the upper coupler (fifth wheel) or turntable; or anchoring and support members of a truck, as applicable. The vertical reaction must be calculated based on the static weight of the fully loaded cargo tank motor vehicle, all structural elements, equipment and appurtenances supported by the cargo tank wall; and

(D) The torsional shear stress generated by the same lateral forces as described in paragraph (c)(2)(iv)(C) of this section.

(d) In no case may the minimum thickness of the cargo tank shells and heads be less than that prescribed in §178.346–2, §178.347–2, or §178.348–2, as applicable.

(e) For a cargo tank mounted on a frame or built with integral structural supports, the calculation of effective stresses for the loading conditions in paragraph (c) of this section may include the structural contribution of the frame or the integral structural supports.

(f) The design, construction, and installation of an attachment, appurtenance to a cargo tank, structural support member between the cargo tank and the vehicle or suspension component must conform to the following requirements:

(1) Structural members, the suspension sub-frame, accident protection structures and external circumferential reinforcement devices must be used as sites for attachment of appurtenances and other accessories to the cargo tank, when practicable.

(2) A lightweight attachment to a cargo tank wall such as a conduit clip, brake line clip, skirting structure, lamp mounting bracket, or placard holder must be of a construction having lesser strength than the cargo tank wall materials and may not be more than 72 percent of the thickness of the material to which it is attached. The lightweight attachment may be secured directly to the cargo tank wall if the device is designed and installed in such a manner that, if damaged, it will not affect the lading retention integrity of the tank. A lightweight attachment must be secured to the cargo tank shell or head by continuous weld or in such a manner as to preclude formation of pockets which may become sites for corrosion.

(3) Except as prescribed in paragraphs (f)(1) and (f)(2) of this section, the welding of any appurtenance to the cargo tank wall must be made by attachment of a mounting pad so that there will be no adverse effect upon the

lading retention integrity of the cargo tank if any force less than that prescribed in paragraph (b)(1) of this section is applied from any direction. The thickness of the mounting pad may not be less than that of the shell or head to which it is attached, and not more than 1.5 times the shell or head thickness. However, a pad with a minimum thickness of 0.187 inch may be used when the shell or head thickness is over 0.187 inch. If weep holes or telltale holes are used, the pad must be drilled or punched at the lowest point before it is welded to the tank. Each pad must:

(i) Be fabricated from material determined to be suitable for welding to both the cargo tank material and the material of the appurtenance or structural support member; a Design Certifying Engineer must make this determination considering chemical and physical properties of the materials and must specify filler material conforming to the requirements of the ASME Code (incorporated by reference; see § 171.7 of this subchapter).

(ii) Be preformed to an inside radius no greater than the outside radius of the cargo tank at the attachment location.

(iii) Extend at least 2 inches in each direction from any point of attachment of an appurtenance or structural support member. This dimension may be measured from the center of the structural member attached.

(iv) Have rounded corners, or otherwise be shaped in a manner to minimize stress concentrations on the shell or head.

(v) Be attached by continuous fillet welding. Any fillet weld discontinuity may only be for the purpose of preventing an intersection between the fillet weld and the tank or jacket seam weld.

[Amdt. 178–89, 55 FR 37059, Sept. 7, 1990, as amended by Amdt. 178–89, 56 FR 27876, June 17, 1991; Amdt. 178–104, 59 FR 49135, Sept. 26, 1994; Amdt. 178–105, 59 FR 55173, 55174, 55175, Nov. 3, 1994; 60 FR 17402, Apr. 5, 1995; Amdt. 178–118, 61 FR 51341, Oct. 1, 1996; 65 FR 58631, Sept. 29, 2000; 68 FR 19283, Apr. 18, 2003; 68 FR 75755, Dec. 31, 2003; 74 FR 16143, Apr. 9, 2009; 78 FR 60755, Oct. 2, 2013]

§ 178.345–4 Joints.

(a) All joints between the cargo tank shell, heads, baffles, baffle attaching rings, and bulkheads must be welded in conformance with Section VIII of the ASME Code (IBR, see § 171.7 of this subchapter).

(b) Where practical all welds must be easily accessible for inspection.

[Amdt. 178–89, 54 FR 25022, June 12, 1989, as amended by Amdt. 178–118, 61 FR 51341, Oct. 1, 1996; 68 FR 75756, Dec. 31, 2003]

§ 178.345–5 Manhole assemblies.

(a) Each cargo tank with capacity greater than 400 gallons must be accessible through a manhole at least 15 inches in diameter.

(b) Each manhole, fill opening and washout assembly must be structurally capable of withstanding, without leakage or permanent deformation that would affect its structural integrity, a static internal fluid pressure of at least 36 psig, or cargo tank test pressure, whichever is greater. The manhole assembly manufacturer shall verify compliance with this requirement by hydrostatically testing at least one percent (or one manhole closure, whichever is greater) of all manhole closures of each type produced each 3 months, as follows:

(1) The manhole, fill opening, or washout assembly must be tested with the venting devices blocked. Any leakage or deformation that would affect the product retention capability of the assembly shall constitute a failure.

(2) If the manhole, fill opening, or washout assembly tested fails, then five more covers from the same lot must be tested. If one of these five covers fails, then all covers in the lot from which the tested covers were selected are to be 100% tested or rejected for service.

(c) Each manhole, filler and washout cover must be fitted with a safety device that prevents the cover from opening fully when internal pressure is present.

(d) Each manhole and fill cover must be secured with fastenings that will prevent opening of the covers as a result of vibration under normal transportation conditions or shock impact

due to a rollover accident on the roadway or shoulder where the fill cover is not struck by a substantial obstacle.

(e) On cargo tank motor vehicles manufactured after October 1, 2004, each manhole assembly must be permanently marked on the outside by stamping or other means in a location visible without opening the manhole assembly or fill opening, with:

(1) Manufacturer's name;

(2) Test pressure ____ psig;

(3) A statement certifying that the manhole cover meets the requirements in § 178.345–5.

(f) All components mounted on a manhole cover that form part of the lading retention structure of the cargo tank wall must withstand the same static internal fluid pressure as that required for the manhole cover. The component manufacturer shall verify compliance using the same test procedure and frequency of testing as specified in § 178.345–5(b).

[Amdt. 178–89, 54 FR 25022, June 12, 1989, as amended by Amdt. 178–105, 59 FR 55175, Nov. 3, 1994; 68 FR 19284, Apr. 18, 2003; 74 FR 16144, Apr. 9, 2009]

§ 178.345–6 Supports and anchoring.

(a) A cargo tank with a frame not integral to the cargo tank must have the tank secured by restraining devices to eliminate any motion between the tank and frame that may abrade the tank shell due to the stopping, starting, or turning of the cargo tank motor vehicle. The design calculations of the support elements must include the stresses indicated in § 178.345–3(b) and as generated by the loads described in § 178.345–3(c). Such restraining devices must be readily accessible for inspection and maintenance, except that insulation and jacketing are permitted to cover the restraining devices.

(b) A cargo tank designed and constructed so that it constitutes, in whole or in part, the structural member used in lieu of a frame must be supported in such a manner that the resulting stress levels in the cargo tank do not exceed those specified in § 178.345–3(a). The design calculations of the support elements must include the stresses indicated in § 178.345–3(b) and as generated by the loads described in § 178.345–3(c).

[Amdt. 178–89, 54 FR 25023, June 12, 1989, as amended by Amdt. 178–105, 59 FR 55175, Nov. 3, 1994; Amdt. 178–118, 61 FR 51341, Oct. 1, 1996]

§ 178.345–7 Circumferential reinforcements.

(a) A cargo tank with a shell thickness of less than ⅜ inch must be circumferentially reinforced with bulkheads, baffles, ring stiffeners, or any combination thereof, in addition to the cargo tank heads.

(1) Circumferential reinforcement must be located so that the thickness and tensile strength of the shell material in combination with the frame and reinforcement produces structural integrity at least equal to that prescribed in § 178.345–3 and in such a manner that the maximum unreinforced portion of the shell does not exceed 60 inches. For cargo tanks designed to be loaded by vacuum, spacing of circumferential reinforcement may exceed 60 inches provided the maximum unreinforced portion of the shell conforms with the requirements in Section VIII of the ASME Code (IBR, see § 171.7 of this subchapter).

(2) Where circumferential joints are made between conical shell sections, or between conical and cylindrical shell sections, and the angle between adjacent sections is less than 160 degrees, circumferential reinforcement must be located within one inch of the shell joint, unless otherwise reinforced with structural members capable of maintaining shell stress levels authorized in § 178.345–3. When the joint is formed by the large ends of adjacent conical shell sections, or by the large end of a conical shell and a cylindrical shell section, this angle is measured inside the shell; when the joint is formed by the small end of a conical shell section and a cylindrical shell section, it is measured outside the shell.

(b) Except for doubler plates and knuckle pads, no reinforcement may cover any circumferential joint.

(c) When a baffle or baffle attachment ring is used as a circumferential reinforcement member, it must produce structural integrity at least equal to that prescribed in § 178.345–3

and must be circumferentially welded to the cargo tank shell. The welded portion may not be less than 50 percent of the total circumference of the cargo tank and the length of any unwelded space on the joint may not exceed 40 times the shell thickness unless reinforced external to the cargo tank.

(d) When a ring stiffener is used as a circumferential reinforcement member, whether internal or external, reinforcement must be continuous around the circumference of the cargo tank shell and must be in accordance with the following:

(1) The section modulus about the neutral axis of the ring section parallel to the shell must be at least equal to that derived from the applicable formula:

$I/C = 0.00027WL$, for MS, HSLA and SS;
or
$I/C = 0.000467WL$, for aluminum alloys;

Where:

I/C = Section modulus in inches ^{3}
W = Tank width, or diameter, inches
L = Spacing of ring stiffener, inches; i.e., the maximum longitudinal distance from the midpoint of the unsupported shell on one side of the ring stiffener to the midpoint of the unsupported shell on the opposite side of the ring stiffener.

(2) If a ring stiffener is welded to the cargo tank shell, a portion of the shell may be considered as part of the ring section for purposes of computing the ring section modulus. This portion of the shell may be used provided at least 50 percent of the total circumference of the cargo tank is welded and the length of any unwelded space on the joint does not exceed 40 times the shell thickness. The maximum portion of the shell to be used in these calculations is as follows:

Number of circumferential ring stiffener-to-shell welds	J [1]	Shell section
1		20t
2	Less than 20t	20t+J
2	20t or more	40t

[1] where:
t=Shell thickness, inches;
J=Longitudinal distance between parallel circumferential ring stiffener-to-shell welds.

(3) When used to meet the vacuum requirements of this section, ring stiffeners must be as prescribed in Section VIII of the ASME Code.

(4) If configuration of internal or external ring stiffener encloses an air space, this air space must be arranged for venting and be equipped with drainage facilities which must be kept operative at all times.

(5) Hat shaped or open channel ring stiffeners which prevent visual inspection of the cargo tank shell are prohibited on cargo tank motor vehicles constructed of carbon steel.

[Amdt. 178–89, 55 FR 37060, Sept. 7, 1990, as amended by Amdt. 178–89, 56 FR 27876, June 17, 1991; 56 FR 46354, Sept. 11, 1991; Amdt. 178–104, 59 FR 49135, Sept. 26, 1994; Amdt. 178–118, 61 FR 51341, Oct. 1, 1996; 68 FR 75756, Dec. 31, 2003]

§ 178.345–8 Accident damage protection.

(a) *General.* Each cargo tank motor vehicle must be designed and constructed in accordance with the requirements of this section and the applicable individual specification to minimize the potential for the loss of lading due to an accident.

(1) Any dome, sump, or washout cover plate projecting from the cargo tank wall that retains lading in any tank orientation, must be as strong and tough as the cargo tank wall and have a thickness at least equal to that specified by the appropriate cargo tank specification. Any such projection located in the lower ⅓ of the tank circumference (or cross section perimeter for non-circular cargo tanks) that extends more than half its diameter at the point of attachment to the tank or more than 4 inches from the cargo tank wall, or located in the upper ⅔ of the tank circumference (or cross section perimeter for non-circular cargo tanks) that extends more than ¼ its diameter or more than 2 inches from the point of attachment to the tank must have accident damage protection devices that are:

(i) As specified in this section;

(ii) 125 percent as strong as the otherwise required accident damage protection device; or

(iii) Attached to the cargo tank in accordance with the requirements of paragraph (a)(3) of this section.

(2) Outlets, valves, closures, piping, or any devices that if damaged in an accident could result in a loss of lading

from the cargo tank must be protected by accident damage protection devices as specified in this section.

(3) Accident damage protection devices attached to the wall of a cargo tank must be able to withstand or deflect away from the cargo tank the loads specified in this section. They must be designed, constructed and installed so as to maximize the distribution of loads to the cargo tank wall and to minimize the possibility of adversely affecting the lading retention integrity of the cargo tank. Accident induced stresses resulting from the appropriate accident damage protection device requirements in combination with the stresses from the cargo tank operating at the MAWP may not result in a cargo tank wall stress greater than the ultimate strength of the material of construction using a safety factor of 1.3. Deformation of the protection device is acceptable provided the devices being protected are not damaged when loads specified in this section are applied.

(4) Any piping that extends beyond an accident damage protection device must be equipped with a stop-valve and a sacrificial device such as a shear section. The sacrificial device must be located in the piping system outboard of the stop-valve and within the accident damage protection device to prevent any accidental loss of lading. The device must break at no more than 70 percent of the load that would be required to cause the failure of the protected lading retention device, part or cargo tank wall. The failure of the sacrificial device must leave the protected lading retention device and its attachment to the cargo tank wall intact and capable of retaining product.

(5) *Minimum road clearance.* The minimum road clearance of any cargo tank motor vehicle component or protection device located between any two adjacent axles on a vehicle or vehicle combination must be at least one-half inch for each foot separating the component or device from the nearest axle of the adjacent pair, but in no case less than twelve (12) inches, except that the minimum road clearance for landing gear or other attachments within ten (10) feet of an axle must be no less than ten (10) inches. These measurements must be calculated at the gross vehicle weight rating of the cargo tank motor vehicle.

(b) Each outlet, projection or piping located in the lower ⅓ of the cargo tank circumference (or cross section perimeter for non-circular cargo tanks) that could be damaged in an accident that may result in the loss of lading must be protected by a bottom damage protection device, except as provided by paragraph (a)(1) of this section and §173.33(e) of this subchapter. Outlets, projections and piping may be grouped or clustered together and protected by a single protection device.

(1) Any bottom damage protection device must be able to withstand a force of 155,000 pounds (based on the ultimate strength of the material) from the front, side, or rear, uniformly distributed over each surface of the device, over an area not to exceed 6 square feet, and a width not to exceed 6 feet. Suspension components and structural mounting members may be used to provide all, or part, of this protection. The device must extend no less than 6 inches beyond any component that may contain lading in transit.

(2) A lading discharge opening equipped with an internal self-closing stop-valve need not conform to paragraph (b)(1) of this section provided it is protected so as to reasonably assure against the accidental loss of lading. This protection must be provided by a sacrificial device located outboard of each internal self-closing stop-valve and within 4 inches of the major radius of the cargo tank shell or within 4 inches of a sump, but in no case more than 8 inches from the major radius of the tank shell. The device must break at no more than 70 percent of the load that would be required to cause the failure of the protected lading retention device, part or cargo tank wall. The failure of the sacrificial device must leave the protected lading retention device or part and its attachment to the cargo tank wall intact and capable of retaining product.

(c) Each closure for openings, including but not limited to the manhole, filling or inspection openings, and each valve, fitting, pressure relief device, vapor recovery stop valve or lading retaining fitting located in the upper ⅔

of a cargo tank circumference (or cross section perimeter for non-circular tanks) must be protected by being located within or between adjacent rollover damage protection devices, or by being 125 percent of the strength that would be provided by the otherwise required damage protection device.

(1) A rollover damage protection device on a cargo tank motor vehicle must be designed and installed to withstand loads equal to twice the weight of the loaded cargo tank motor vehicle applied as follows: normal to the cargo tank shell (perpendicular to the cargo tank surface); and tangential (perpendicular to the normal load) from any direction. The stresses shall not exceed the ultimate strength of the material of construction. These design loads may be considered to be uniformly distributed and independently applied. If more than one rollover protection device is used, each device must be capable of carrying its proportionate share of the required loads and in each case at least one-fourth the total tangential load. The design must be proven capable of carrying the required loads by calculations, tests or a combination of tests and calculations.

(2) A rollover damage protection device that would otherwise allow the accumulation of liquid on the top of the cargo tank, must be provided with a drain that directs the liquid to a safe point of discharge away from any structural component of the cargo tank motor vehicle.

(d) *Rear-end tank protection.* Each cargo tank motor vehicle must be provided with a rear-end tank protection device to protect the cargo tank and piping in the event of a rear-end collision and reduce the likelihood of damage that could result in the loss of lading. Nothing in this paragraph relieves the manufacturer of responsibility for complying with the requirements of § 393.86 of this title and, if applicable, paragraph (b) of this section. The rear-end tank protection device must conform to the following requirements:

(1) The rear-end cargo tank protection device must be designed so that it can deflect at least 6 inches horizontally forward with no contact between any part of the cargo tank motor vehicle which contains lading during transit and with any part of the rear-end protection device, or with a vertical plane passing through the outboard surface of the protection device.

(2) The dimensions of the rear-end cargo tank protection device shall conform to the following:

(i) The bottom surface of the rear-end protection device must be at least 4 inches below the lower surface of any part at the rear of the cargo tank motor vehicle which contains lading during transit and not more than 60 inches from the ground when the vehicle is empty.

(ii) The maximum width of a notch, indentation, or separation between sections of a rear-end cargo tank protection device may not exceed 24 inches. A notched, indented, or separated rear-end protection device may be used only when the piping at the rear of the cargo tank is equipped with a sacrificial device outboard of a shut-off valve.

(iii) The widest part of the motor vehicle at the rear may not extend more than 18 inches beyond the outermost ends of the device or (if separated) devices on either side of the vehicle.

(3) The structure of the rear-end protection device and its attachment to the vehicle must be designed to satisfy the conditions specified in paragraph (d)(1) of this section when subjected to an impact of the cargo tank motor vehicle at rated payload, at a deceleration of 2 ''g''. Such impact must be considered as being uniformly applied in the horizontal plane at an angle of 10 degrees or less to the longitudinal axis of the vehicle.

(e) *Longitudinal deceleration protection.* In order to account for stresses due to longitudinal impact in an accident, the cargo tank shell and heads must be able to withstand the load resulting from the design pressure in combination with the dynamic pressure resulting from a longitudinal deceleration of 2 ''g''. For this loading condition, the allowable stress value used may not exceed the ultimate strength of the material of construction using a safety factor of 1.3. Performance testing, analytical methods, or a combination thereof, may be used to prove this capability provided the methods are accurate and verifiable. For cargo tanks with internal baffles,

the decelerative force may be reduced by 0.25 ''g'' for each baffle assembly, but in no case may the total reduction in decelerative force exceed 1.0 ''g''.

[Amdt. 178–89, 54 FR 25023, June 12, 1989, as amended at 55 FR 37061, Sept. 7, 1990; Amdt. 178–105, 59 FR 55175, Nov. 3, 1994; Amdt. 178–118, 61 FR 51341, Oct. 1, 1996; 68 FR 19284, Apr. 18, 2003]

§ 178.345–9 Pumps, piping, hoses and connections.

(a) Suitable means must be provided during loading or unloading operations to ensure that pressure within a cargo tank does not exceed test pressure.

(b) Each hose, piping, stop-valve, lading retention fitting and closure must be designed for a bursting pressure of the greater of 100 psig or four times the MAWP.

(c) Each hose coupling must be designed for a bursting pressure of the greater of 120 psig or 4.8 times the MAWP of the cargo tank, and must be designed so that there will be no leakage when connected.

(d) Suitable provision must be made to allow for and prevent damage due to expansion, contraction, jarring, and vibration. Slip joints may not be used for this purpose in the lading retention system.

(e) Any heating device, when installed, must be so constructed that the breaking of its external connections will not cause leakage of the cargo tank lading.

(f) Any gauging, loading or charging device, including associated valves, must be provided with an adequate means of secure closure to prevent leakage.

(g) The attachment and construction of each loading/unloading or charging line must be of sufficient strength, or be protected by a sacrificial device, such that any load applied by loading/unloading or charging lines connected to the cargo tank cannot cause damage resulting in loss of lading from the cargo tank.

(h) Use of a nonmetallic pipe, valve or connection that is not as strong and heat resistant as the cargo tank material is authorized only if such attachment is located outboard of the lading retention system.

[Amdt. 178–89, 54 FR 25025, June 12, 1989, as amended at 55 FR 37061, Sept. 7, 1990, Amdt. 178–89, 56 FR 27877, June 17, 1991; Amdt. 178–118, 61 FR 51341, Oct. 1, 1996]

§ 178.345–10 Pressure relief.

(a) Each cargo tank must be equipped to relieve pressure and vacuum conditions in conformance with this section and the applicable individual specification. The pressure and vacuum relief system must be designed to operate and have sufficient capacity to prevent cargo tank rupture or collapse due to over-pressurization or vacuum resulting from loading, unloading, or from heating and cooling of lading. Pressure relief systems are not required to conform to the ASME Code.

(b) *Type and construction of relief systems and devices.* (1) Each cargo tank must be provided with a primary pressure relief system consisting of one or more reclosing pressure relief valves. A secondary pressure relief system consisting of another pressure relief valve in parallel with the primary pressure relief system may be used to augment the total venting capacity of the cargo tank. Non-reclosing pressure relief devices are not authorized in any cargo tank except when in series with a reclosing pressure relief device. Gravity actuated reclosing valves are not authorized on any cargo tank.

(2) When provided by § 173.33(c)(1)(iii) of this subchapter, cargo tanks may be equipped with a normal vent. Such vents must be set to open at not less than 1 psig and must be designed to prevent loss of lading through the device in case of vehicle overturn.

(3) Each pressure relief system must be designed to withstand dynamic pressure surges in excess of the design set pressure as specified in paragraphs (b)(3) (i) and (ii) of this section. Set pressure is a function of MAWP as set forth in paragraph (d) of this section.

(i) Each pressure relief device must be able to withstand dynamic pressure surge reaching 30 psig above the design set pressure and sustained above the set pressure for at least 60 milliseconds with a total volume of liquid released

not exceeding one gallon before the relief device recloses to a leak-tight condition. This requirement must be met regardless of vehicle orientation. This capability must be demonstrated by testing. An acceptable method is outlined in TTMA RP No. 81–97 ''Performance of Spring Loaded Pressure Relief Valves on MC 306, MC 307, MC 312, DOT 406, DOT 407, and DOT 412 Tanks'' (incorporated by reference; see § 171.7 of this subchapter).

(ii) After August 31, 1995, each pressure relief device must be able to withstand a dynamic pressure surge reaching 30 psig above the design set pressure and sustained above the design set pressure for at least 60 milliseconds with a total volume of liquid released not exceeding 1 L before the relief valve recloses to a leak-tight condition. This requirement must be met regardless of vehicle orientation. This capability must be demonstrated by testing. TTMA RP No. 81, cited in paragraph (b)(3)(i) of this section, is an acceptable test procedure.

(4) Each reclosing pressure relief valve must be constructed and installed in such a manner as to prevent unauthorized adjustment of the relief valve setting.

(5) No shut-off valve or other device that could prevent venting through the pressure relief system may be installed in a pressure relief system.

(6) The pressure relief system must be mounted, shielded and drainable so as to minimize the accumulation of material that could impair the operation or discharge capability of the system by freezing, corrosion or blockage.

(c) *Location of relief devices.* Each pressure relief device must communicate with the vapor space above the lading as near as practicable to the center of the vapor space. For example, on a cargo tank designed to operate in a level attitude, the device should be positioned at the horizontal and transverse center of the cargo tank; on cargo tanks sloped to the rear, the device should be located in the forward half of the cargo tank. The discharge from any device must be unrestricted. Protective devices which deflect the flow of vapor are permissible provided the required vent capacity is maintained.

(d) *Settings of pressure relief system.* The set pressure of the pressure relief system is the pressure at which it starts to open, allowing discharge.

(1) *Primary pressure relief system.* The set pressure of each primary relief valve must be no less than 120 percent of the MAWP, and no more than 132 percent of the MAWP. The valve must reclose at not less than 108 percent of the MAWP and remain closed at lower pressures.

(2) *Secondary pressure relief system.* The set pressure of each pressure relief valve used as a secondary relief device must be not less than 120 percent of the MAWP.

(e) *Venting capacity of pressure relief systems.* The pressure relief system (primary and secondary, including piping) must have sufficient venting capacity to limit the cargo tank internal pressure to not more than the cargo tank test pressure. The total venting capacity, rated at not more than the cargo tank test pressure, must be at least that specified in table I, except as provided in § 178.348–4.

TABLE I—MINIMUM EMERGENCY VENT CAPACITY

[In cubic feet free air/hour at 60 °F and 1 atm.]

Exposed area in square feet	Cubic feet free air per hour
20	15,800
30	23,700
40	31,600
50	39,500
60	47,400
70	55,300
80	63,300
90	71,200
100	79,100
120	94,900
140	110,700
160	126,500
180	142,300
200	158,100
225	191,300
250	203,100
275	214,300
300	225,100
350	245,700
400	265,000
450	283,200
500	300,600
550	317,300
600	333,300
650	348,800
700	363,700
750	378,200
800	392,200
850	405,900
900	419,300

TABLE I—MINIMUM EMERGENCY VENT CAPACITY—Continued

[In cubic feet free air/hour at 60 °F and 1 atm.]

Exposed area in square feet	Cubic feet free air per hour
950	432,300
1,000	445,000

NOTE 1: Interpolate for intermediate sizes.

(1) *Primary pressure relief system.* Unless otherwise specified in the applicable individual specification, the primary relief system must have a minimum venting capacity of 12,000 SCFH per 350 square feet of exposed cargo tank area, but in any case at least one fourth the required total venting capacity for the cargo tank.

(2) *Secondary pressure relief system.* If the primary pressure relief system does not provide the required total venting capacity, additional capacity must be provided by a secondary pressure relief system.

(f) *Certification of pressure relief devices.* The manufacturer of any pressure relief device, including valves, frangible (rupture) disks, vacuum vents and combination devices must certify that the device model was designed and tested in accordance with this section and the appropriate cargo tank specification. The certificate must contain sufficient information to describe the device and its performance. The certificate must be signed by a responsible official of the manufacturer who approved the flow capacity certification.

(g) *Rated flow capacity certification test.* Each pressure relief device model must be successfully flow capacity certification tested prior to first use. Devices having one design, size and set pressure are considered to be one model. The testing requirements are as follows:

(1) At least 3 devices of each specific model must be tested for flow capacity at a pressure not greater than the test pressure of the cargo tank. For a device model to be certified, the capacities of the devices tested must fall within a range of plus or minus 5 percent of the average for the devices tested.

(2) The rated flow capacity of a device model may not be greater than 90 percent of the average value for the devices tested.

(3) The rated flow capacity derived for each device model must be certified by a responsible official of the device manufacturer.

(h) *Marking of pressure relief devices.* Each pressure relief device must be permanently marked with the following:

(1) Manufacturer's name;

(2) Model number;

(3) Set pressure, in psig; and

(4) Rated flow capacity, in SCFH at the rating pressure, in psig.

[Amdt. 178–89, 54 FR 25025, June 12, 1989, as amended at 55 FR 21038, May 22, 1990; 55 FR 37062, Sept. 7, 1990; Amdt. 178–89, 56 FR 27877, June 17, 1991; Amdt. 178–105, 59 FR 55175, Nov. 3, 1994; Amdt. 178–118, 61 FR 51341, Oct. 1, 1996; 65 FR 58631, Sept. 29, 2000; 66 FR 45389, Aug. 28, 2001; 68 FR 19284, Apr. 18, 2003]

§ 178.345–11 Tank outlets.

(a) *General.* As used in this section, ''loading/unloading outlet'' means any opening in the cargo tank wall used for loading or unloading of lading, as distinguished from outlets such as manhole covers, vents, vapor recovery devices, and similar closures. Cargo tank outlets, closures and associated piping must be protected in accordance with § 178.345–8.

(b) Each cargo tank loading/unloading outlet must be equipped with an internal self-closing stop-valve, or alternatively, with an external stop-valve located as close as practicable to the cargo tank wall. Each cargo tank loading/unloading outlet must be in accordance with the following provisions:

(1) Each loading/unloading outlet must be fitted with a self-closing system capable of closing all such outlets in an emergency within 30 seconds of actuation. During normal operations the outlets may be closed manually. The self-closing system must be designed according to the following:

(i) Each self-closing system must include a remotely actuated means of closure located more than 10 feet from the loading/unloading outlet where vehicle length allows, or on the end of the cargo tank farthest away from the

loading/unloading outlet. The actuating mechanism must be corrosion-resistant and effective in all types of environment and weather.

(ii) If the actuating system is accidentally damaged or sheared off during transportation, each loading/unloading outlet must remain securely closed and capable of retaining lading.

(iii) When required by part 173 of this subchapter for materials which are flammable, pyrophoric, oxidizing, or Division 6.1 (poisonous liquid) materials, the remote means of closure must be capable of thermal activation. The means by which the self-closing system is thermally activated must be located as close as practicable to the primary loading/unloading connection and must actuate the system at a temperature not over 250 °F. In addition, outlets on these cargo tanks must be capable of being remotely closed manually or mechanically.

(2) Bottom loading outlets which discharge lading into the cargo tank through fixed internal piping above the maximum liquid level of the cargo tank need not be equipped with a self-closing system.

(c) Any loading/unloading outlet extending beyond an internal self-closing stop-valve, or beyond the innermost external stop-valve which is part of a self-closing system, must be fitted with another stop-valve or other leak-tight closure at the end of such connection.

(d) Each cargo tank outlet that is not a loading/unloading outlet must be equipped with a stop-valve or other leak-tight closure located as close as practicable to the cargo tank outlet. Any connection extending beyond this closure must be fitted with another stop-valve or other leak-tight closure at the end of such connection.

[Amdt. 178–89, 56 FR 27877, June 17, 1991, as amended by Amdt. 178–97, 57 FR 45465, Oct. 1, 1992; Amdt. 178–118, 61 FR 51341, Oct. 1, 1996]

§ 178.345–12 Gauging devices.

Each cargo tank, except a cargo tank intended to be filled by weight, must be equipped with a gauging device that indicates the maximum permitted liquid level to within 0.5 percent of the nominal capacity as measured by volume or liquid level. Gauge glasses are not permitted.

[Amdt. 178–89, 55 FR 37062, Sept. 7, 1990, as amended by Amdt. 178–118, 61 FR 51342, Oct. 1, 1996]

§ 178.345–13 Pressure and leakage tests.

(a) Each cargo tank must be pressure and leakage tested in accordance with this section and §§ 178.346–5, 178.347–5, or 178.348–5.

(b) *Pressure test.* Each cargo tank or cargo tank compartment must be tested hydrostatically or pneumatically. Each cargo tank of a multi-cargo tank motor vehicle must be tested with the adjacent cargo tanks empty and at atmospheric pressure. Each closure, except pressure relief devices and loading/unloading venting devices rated at less than the prescribed test pressure, must be in place during the test. If the venting device is not removed during the test, such device must be rendered inoperative by a clamp, plug or other equally effective restraining device, which may not prevent the detection of leaks, or damage the device. Restraining devices must be removed immediately after the test is completed.

(1) *Hydrostatic method.* Each cargo tank, including its domes, must be filled with water or other liquid having similar viscosity, the temperature of which may not exceed 100 °F. The cargo tank must then be pressurized as prescribed in the applicable specification. The pressure must be gauged at the top of the cargo tank. The prescribed test pressure must be maintained for at least 10 minutes during which time the cargo tank must be inspected for leakage, bulging, or other defect.

(2) *Pneumatic method.* A pneumatic test may be used in place of the hydrostatic test. However, pneumatic pressure testing may involve higher risk than hydrostatic testing. Therefore, suitable safeguards must be provided to protect personnel and facilities should failure occur during the test. The cargo tank must be pressurized with air or an inert gas. Test pressure must be reached gradually by increasing the pressure to one half of test pressure. Thereafter, the pressure must be increased in steps of approximately one tenth of the test pressure until test

pressure is reached. Test pressure must be held for at least 5 minutes. The pressure must then be reduced to the inspection pressure which must be maintained while the entire cargo tank surface is inspected for leakage and other sign of defects. The inspection method must consist of coating all joints and fittings with a solution of soap and water or other equally sensitive method.

(c) *Leakage test*. The cargo tank with all its accessories in place and operable must be leak tested at not less than 80 percent of tank's MAWP with the pressure maintained for at least 5 minutes.

(d) Any cargo tank that leaks, bulges or shows any other sign of defect must be rejected. Rejected cargo tanks must be suitably repaired and retested successfully prior to being returned to service. The retest after any repair must use the same method of test under which the cargo tank was originally rejected.

[Amdt. 178–89, 54 FR 25026, June 12, 1989, as amended at 55 FR 37063, Sept. 7, 1990; Amdt. 178–105, 59 FR 55176, Nov. 3, 1994; Amdt. 178–118, 61 FR 51342, Oct. 1, 1996; 65 FR 58631, Sept. 29, 2000; 68 FR 19284, Apr. 18, 2003]

§ 178.345–14 Marking.

(a) *General*. The manufacturer shall certify that each cargo tank motor vehicle has been designed, constructed and tested in accordance with the applicable Specification DOT 406, DOT 407 or DOT 412 (§§ 178.345, 178.346, 178.347, 178.348) cargo tank requirements and, when applicable, with Section VIII of the ASME Code (IBR, see § 171.7 of this subchapter). The certification shall be accomplished by marking the cargo tank as prescribed in paragraphs (b) and (c) of this section, and by preparing the certificate prescribed in § 178.345–15. Metal plates prescribed by paragraphs (b), (c), (d) and (e) of this section, must be permanently attached to the cargo tank or its integral supporting structure, by brazing, welding or other suitable means. These plates must be affixed on the left side of the vehicle near the front of the cargo tank (or the frontmost cargo tank of a multi-cargo tank motor vehicle), in a place readily accessible for inspection. The plates must be permanently and plainly marked in English by stamping, embossing or other means in characters at least 3/16 inch high. The information required by paragraphs (b) and (c) of this section may be combined on one specification plate.

(b) *Nameplate*. Each cargo tank must have a corrosion resistant nameplate permanently attached to it. The following information, in addition to any applicable information required by the ASME Code, must be marked on the tank nameplate (parenthetical abbreviations may be used):

(1) DOT-specification number DOT XXX (DOT XXX) where ''XXX'' is replaced with the applicable specification number. For cargo tanks having a variable specification plate, the DOT-specification number is replaced with the words ''See variable specification plate.''

(2) Original test date, month and year (Orig. Test Date).

(3) Tank MAWP in psig.

(4) Cargo tank test pressure (Test P), in psig.

(5) Cargo tank design temperature range (Design temp. range),__ °F to __ °F.

(6) Nominal capacity (Water cap.), in gallons.

(7) Maximum design density of lading (Max. lading density), in pounds per gallon.

(8) Material specification number—shell (Shell matl, yyy***), where ''yyy'' is replaced by the alloy designation and ''***'' by the alloy type.

(9) Material specification number—heads (Head matl, yyy***), where ''yyy'' is replaced by the alloy designation and ''***'' by the alloy type.

NOTE: When the shell and heads materials are the same thickness, they may be combined, (Shell&head matl, yyy***).

(10) Weld material (Weld matl.).

(11) Minimum thickness—shell (Min. shell-thick), in inches. When minimum shell thicknesses are not the same for different areas, show (top __, side __, bottom __, in inches).

(12) Minimum thickness—heads (Min. heads thick.), in inches.

(13) Manufactured thickness—shell (Mfd. shell thick.), top __, side __, bottom __, in inches. (Required when additional thickness is provided for corrosion allowance.)

(14) Manufactured thickness—heads (Mfd. heads thick.), in inches. (Required when additional thickness is provided for corrosion allowance.)

(15) Exposed surface area, in square feet.

(c) *Specification plate.* Each cargo tank motor vehicle must have an additional corrosion resistant metal specification plate attached to it. The specification plate must contain the following information (parenthetical abbreviations may be used):

(1) Cargo tank motor vehicle manufacturer (CTMV mfr.).

(2) Cargo tank motor vehicle certification date (CTMV cert. date), if different from the cargo tank certification date.

(3) Cargo tank manufacturer (CT mfr.).

(4) Cargo tank date of manufacture (CT date of mfr.), month and year.

(5) Maximum weight of lading (Max. Payload), in pounds.

(6) Maximum loading rate in gallons per minute (Max. Load rate, GPM).

(7) Maximum unloading rate in gallons per minute (Max. Unload rate).

(8) Lining material (Lining), if applicable.

(9) Heating system design pressure (Heating sys. press.), in psig, if applicable.

(10) Heating system design temperature (Heating sys. temp.), in °F, if applicable.

(d) *Multi-cargo tank motor vehicle.* For a multi-cargo tank motor vehicle having all its cargo tanks not separated by any void, the information required by paragraphs (b) and (c) of this section may be combined on one specification plate. When separated by a void, each cargo tank must have an individual nameplate as required in paragraph (b) of this section, unless all cargo tanks are made by the same manufacturer with the same materials, manufactured thickness, minimum thickness and to the same specification. The cargo tank motor vehicle may have a combined nameplate and specification plate. When only one plate is used, the plate must be visible and not covered by insulation. The required information must be listed on the plate from front to rear in the order of the corresponding cargo tank location.

(e) *Variable specification cargo tank.* Each variable specification cargo tank must have a corrosion resistant metal variable specification plate attached to it. The mounting of this variable specification plate must be such that only the plate identifying the applicable specification under which the tank is being operated is legible.

(1) The following information must be included (parenthetical abbreviations are authorized):

Specification DOT XXX (DOT XXX), where ''XXX'' is replaced with the applicable specification number.

Equipment required	Required rating[1]
Pressure relief devices:	
Pressure actuated type.	_____
Frangible type	_____
Lading discharge devices.	_____
Top	_____
Bottom	_____
Pressure unloading fitting.	_____
Closures:	
Manhole	_____
Fill openings	_____
Discharge openings	_____

[1] Required rating—to meet the applicable specification.

(2) If no change of information in the specification plate is required, the letters ''NC'' must follow the rating required. If the cargo tank is not so equipped, the word ''None'' must be inserted.

(3) Those parts to be changed or added must be stamped with the appropriate MC or DOT Specification markings.

(4) The alterations that must be made in order for the tank to be modified from one specification to another must be clearly indicated on the manufacturer's certificate and on the variable specification plate.

[Amdt. 178–89, 54 FR 25027, June 12, 1989, as amended at 55 FR 37063, Sept. 7, 1990; Amdt. 178–99, 58 FR 51534, Oct. 1, 1993; Amdt. 178–104, 59 FR 49135, Sept. 26, 1994; Amdt. 178–105, 59 FR 55176, Nov. 3, 1994; 60 FR 17402, Apr. 5, 1995; Amdt. 178–118, 61 FR 51342, Oct. 1, 1996; 66 FR 45389, Aug. 28, 2001; 68 FR 19284, Apr. 18, 2003; 68 FR 52371, Sept. 3, 2003; 68 FR 75756, Dec. 31, 2003]

§ 178.345–15 Certification.

(a) At or before the time of delivery, the manufacturer of a cargo tank motor vehicle must provide certification documents to the owner of the cargo tank motor vehicle. The registration numbers of the manufacturer, the Design Certifying Engineer, and the Registered Inspector, as appropriate, must appear on the certificates (see subpart F, part 107 in subchapter A of this chapter).

(b) The manufacturer of a cargo tank motor vehicle made to any of these specifications must provide:

(1) For each design type, a certificate signed by a responsible official of the manufacturer and a Design Certifying Engineer certifying that the cargo tank motor vehicle design meets the applicable specification; and

(2) For each ASME cargo tank, a cargo tank manufacturer's data report as required by Section VIII of the ASME Code (IBR, see § 171.7 of this subchapter). For each cargo tank motor vehicle, a certificate signed by a responsible official of the manufacturer and a Registered Inspector certifying that the cargo tank motor vehicle is constructed, tested and completed in conformance with the applicable specification.

(c) The manufacturer of a variable specification cargo tank motor vehicle must provide:

(1) For each design type, a certificate signed by a responsible official of the manufacturer and a Design Certifying Engineer certifying that the cargo tank motor vehicle design meets the applicable specifications; and

(2) For each variable specification cargo tank motor vehicle, a certificate signed by a responsible official of the manufacturer and a Registered Inspector certifying that the cargo tank motor vehicle is constructed, tested and completed in conformance with the applicable specifications. The certificate must include all the information required and marked on the variable specification plate.

(d) In the case of a cargo tank motor vehicle manufactured in two or more stages, each manufacturer who performs a manufacturing operation on the incomplete vehicle or portion thereof shall provide to the succeeding manufacturer, at or before the time of delivery, a certificate covering the particular operation performed by that manufacturer, including any certificates received from previous manufacturers, Registered Inspectors, and Design Certifying Engineers. Each certificate must indicate the portion of the complete cargo tank motor vehicle represented thereby, such as basic cargo tank fabrication, insulation, jacket, lining, or piping. The final manufacturer shall provide all applicable certificates to the owner.

(e) *Specification shortages.* If a cargo tank is manufactured which does not meet all applicable specification requirements, thereby requiring subsequent manufacturing involving the installation of additional components, parts, appurtenances or accessories, the cargo tank manufacturer may affix the name plate and specification plate, as required by § 178.345–14 (b) and (c), without the original date of certification stamped on the specification plate. The manufacturer shall state the specification requirements not complied with on the manufacturer's Certificate of Compliance. When the cargo tank is brought into full compliance with the applicable specification, the Registered Inspector shall stamp the date of compliance on the specification plate. The Registered Inspector shall issue a Certificate of Compliance stating details of the particular operations performed on the cargo tank, and the date and person (manufacturer, carrier, or repair organization) accomplishing the compliance.

[Amdt. 178–89, 55 FR 37063, Sept. 7, 1990, as amended by Amdt. 178–98, 58 FR 33306, June 16, 1993; Amdt. 178–105, 59 FR 55176, Nov. 3, 1994; Amdt. 178–118, 61 FR 51342, Oct. 1, 1996; 68 FR 75756, Dec. 31, 2003]

§ 178.346 Specification DOT 406; cargo tank motor vehicle.

§ 178.346–1 General requirements.

(a) Each Specification DOT 406 cargo tank motor vehicle must meet the general design and construction requirements in § 178.345, in addition to the specific requirements contained in this section.

(b) *MAWP:* The MAWP of each cargo tank must be no lower than 2.65 psig and no higher than 4 psig.

(c) Vacuum loaded cargo tanks must not be constructed to this specification.

(d) Each cargo tank must be ''constructed in accordance with Section VIII of the ASME Code'' (IBR, see § 171.7 of this subchapter) except as modified herein:

(1) The record-keeping requirements contained in the ASME Code Section VIII do not apply. Parts UG–90 through 94 in Section VIII do not apply. Inspection and certification must be made by an inspector registered in accordance with subpart F of part 107.

(2) Loadings must be as prescribed in § 178.345–3.

(3) The knuckle radius of flanged heads must be at least three times the material thickness, and in no case less than 0.5 inch. Stuffed (inserted) heads may be attached to the shell by a fillet weld. The knuckle radius and dish radius versus diameter limitations of UG–32 do not apply. Shell sections of cargo tanks designed with a non-circular cross section need not be given a preliminary curvature, as prescribed in UG–79(b).

(4) Marking, certification, data reports, and nameplates must be as prescribed in §§ 178.345–14 and 178.345–15.

(5) Manhole closure assemblies must conform to §§ 178.345–5 and 178.346–5.

(6) Pressure relief devices must be as prescribed in § 178.346–3.

(7) The hydrostatic or pneumatic test must be as prescribed in § 178.346–5.

(8) The following paragraphs in parts UG and UW in Section VIII of the ASME Code do not apply: UG–11, UG–12, UG–22(g), UG–32(e), UG–34, UG–35, UG–44, UG–76, UG–77, UG–80, UG–81, UG–96, UG–97, UW–13(b)(2), UW–13.1(f) and the dimensional requirements found in Figure UW–13.1.

(9) Single full fillet lap joints without plug welds may be used for arc or gas welded longitudinal seams without radiographic examination under the following conditions:

(i) For a truck-mounted cargo tank, no more than two such joints may be used on the top half of the tank and no more than two joints may be used on the bottom half. They may not be located farther from the top and bottom centerline than 16 percent of the shell's circumference.

(ii) For a self-supporting cargo tank, no more than two such joints may be used on the top of the tank. They may not be located farther from the top centerline than 12.5 percent of the shell's circumference.

(iii) *Compliance test.* Two test specimens of the material to be used in the manufacture of a cargo tank must be tested to failure in tension. The test specimens must be of the same thicknesses and joint configuration as the cargo tank, and joined by the same welding procedures. The test specimens may represent all the tanks that are made of the same materials and welding procedures, have the same joint configuration, and are made in the same facility within 6 months after the tests are completed. Before welding, the fit-up of the joints on the test specimens must represent production conditions that would result in the least joint strength. Evidence of joint fit-up and test results must be retained at the manufacturers' facility.

(iv) *Weld joint efficiency.* The lower value of stress at failure attained in the two tensile test specimens shall be used to compute the efficiency of the joint as follows: Determine the failure ratio by dividing the stress at failure by the mechanical properties of the adjacent metal; this value, when multiplied by 0.75, is the design weld joint efficiency.

(10) The requirements of paragraph UW–9(d) in Section VIII of the ASME Code do not apply.

[Amdt. 178–89, 54 FR 25028, June 12, 1989, as amended at 55 FR 37063, Sept. 7, 1990; Amdt. 178–89, 56 FR 27877, June 17, 1991; Amdt. 178–105, 59 FR 55176, Nov. 3, 1994; 65 FR 58631, Sept. 29, 2000; 66 FR 45387, Aug. 28, 2001; 68 FR 19285, Apr. 18, 2003; 68 FR 75756, Dec. 31, 2003]

§ 178.346–2 Material and thickness of material.

The type and thickness of material for DOT 406 specification cargo tanks must conform to § 178.345–2, but in no case may the thickness be less than that determined by the minimum thickness requirements in § 178.320(a). The following Tables I and II identify

the specified minimum thickness values to be employed in that determination.

TABLE I—SPECIFIED MINIMUM THICKNESS OF HEADS (OR BULKHEADS AND BAFFLES WHEN USED AS TANK REINFORCEMENT) USING MILD STEEL (MS), HIGH STRENGTH LOW ALLOY STEEL (HSLA), AUSTENITIC STAINLESS STEEL (SS), OR ALUMINUM (AL)—EXPRESSED IN DECIMALS OF AN INCH AFTER FORMING

Material	Volume capacity in gallons per inch of length								
	14 or less			Over 14 to 23			Over 23		
	MS	HSLA SS	AL	MS	HSLA SS	AL	MS	HSLA SS	AL
Thickness	.100	.100	.160	.115	.115	.173	.129	.129	.187

TABLE II—SPECIFIED MINIMUM THICKNESS OF SHELL USING MILD STEEL (MS), HIGH STRENGTH LOW ALLOY STEEL (HSLA), AUSTENITIC STAINLESS STEEL (SS), OR ALUMINUM (AL)—EXPRESSED IN DECIMALS OF AN INCH AFTER FORMING [1]

Cargo tank motor vehicle rated capacity (gallons)	MS	SS/HSLA	AL
More than 0 to at least 4,500	0.100	0.100	0.151
More than 4,500 to at least 8,000	0.115	0.100	0.160
More than 8,000 to at least 14,000	0.129	0.129	0.173
More than 14,000	0.143	0.143	0.187

[1] Maximum distance between bulkheads, baffles, or ring stiffeners shall not exceed 60 inches.

[Amdt. 178–89, 54 FR 25028, June 12, 1989, as amended at 55 FR 37064, Sept. 7, 1990; Amdt. 178–105, 59 FR 55176, Nov. 3, 1994; 68 FR 19285, Apr. 18, 2003]

§ 178.346–3 Pressure relief.

(a) Each cargo tank must be equipped with a pressure relief system in accordance with § 178.345–10 and this section.

(b) *Type and construction.* In addition to the pressure relief devices required in § 178.345–10:

(1) Each cargo tank must be equipped with one or more vacuum relief devices;

(2) When intended for use only for lading meeting the requirements of § 173.33(c)(1)(iii) of this subchapter, the cargo tank may be equipped with a normal vent. Such vents must be set to open at not less than 1 psig and must be designed to prevent loss of lading through the device in case of vehicle upset; and

(3) Notwithstanding the requirements in § 178.345–10(b), after August 31, 1996, each pressure relief valve must be able to withstand a dynamic pressure surge reaching 30 psig above the design set pressure and sustained above the set pressure for at least 60 milliseconds with a total volume of liquid released not exceeding 1 L before the relief valve recloses to a leak-tight condition. This requirement must be met regardless of vehicle orientation. This capability must be demonstrated by testing. TTMA RP No. 81 (IBR, see § 171.7 of this subchapter), cited at § 178.345–10(b)(3)(i), is an acceptable test procedure.

(c) *Pressure settings of relief valves.* (1) Notwithstanding the requirements in § 178.345–10(d), the set pressure of each primary relief valve must be not less than 110 percent of the MAWP or 3.3 psig, whichever is greater, and not more than 138 percent of the MAWP. The valve must close at not less than the MAWP and remain closed at lower pressures.

(2) Each vacuum relief device must be set to open at no more than 6 ounces vacuum.

(d) *Venting capacities.* (1) Notwithstanding the requirements in § 178.345–10 (e) and (g), the primary pressure relief valve must have a venting capacity of at least 6,000 SCFH, rated at not greater than 125 percent of the tank test pressure and not greater than 3

psig above the MAWP. The venting capacity required in § 178.345–10(e) may be rated at these same pressures.

(2) Each vacuum relief system must have sufficient capacity to limit the vacuum to 1 psig.

(3) If pressure loading or unloading devices are provided, the relief system must have adequate vapor and liquid capacity to limit the tank pressure to the cargo tank test pressure at maximum loading or unloading rate. The maximum loading and unloading rates must be included on the metal specification plate.

[Amdt. 178–89, 54 FR 25029, June 12, 1989, as amended at 55 FR 37064, Sept. 7, 1990; Amdt. 178–105, 59 FR 55176, Nov. 3, 1994. Redesignated by Amdt. 178–112, 61 FR 18934, Apr. 29, 1996; 66 FR 45389, Aug. 28, 2001; 68 FR 75756, Dec. 31, 2003]

§ 178.346–4 Outlets.

(a) All outlets on each tank must conform to § 178.345–11 and this section.

(b) External self-closing stop-valves are not authorized as an alternative to internal self-closing stop-valves on loading/unloading outlets.

[Amdt. 178–89, 54 FR 25029, June 12, 1989. Redesignated by Amdt. 178–112, 61 FR 18934, Apr. 29, 1996]

§ 178.346–5 Pressure and leakage tests.

(a) Each cargo tank must be tested in accordance with § 178.345–13 and this section.

(b) *Pressure test.* Test pressure must be as follows:

(1) Using the hydrostatic test method, the test pressure must be the greater of 5.0 psig or 1.5 times the cargo tank MAWP.

(2) Using the pneumatic test method, the test pressure must be the greater of 5.0 psig or 1.5 times the cargo tank MAWP, and the inspection pressure must be the cargo tank MAWP.

(c) *Leakage test.* A cargo tank used to transport a petroleum distillate fuel that is equipped with vapor recovery equipment may be leakage tested in accordance with 40 CFR 63.425(e). To satisfy the leakage test requirements of this paragraph, the test specified in 40 CFR 63.425(e)(1) must be conducted using air. The hydrostatic test alternative permitted under Appendix A to 40 CFR Part 60 (''Method 27—Determination of Vapor Tightness of Gasoline Delivery Tank Using Pressure-Vacuum Test'') may not be used to satisfy the leakage test requirements of this paragraph. A cargo tank tested in accordance with 40 CFR 63.425(e) may be marked as specified in § 180.415 of this subchapter.

[Amdt. 178–89, 54 FR 25029, June 12, 1989, as amended at 55 FR 37064, Sept. 7, 1990; Amdt. 178–105, 59 FR 55176, Nov. 3, 1994. Redesignated by Amdt. 178–112, 61 FR 18934, Apr. 29, 1996; 68 FR 19285, Apr. 18, 2003]

§ 178.347 Specification DOT 407; cargo tank motor vehicle.

§ 178.347–1 General requirements.

(a) Each specification DOT 407 cargo tank motor vehicle must conform to the general design and construction requirements in § 178.345 in addition to the specific requirements contained in this section.

(b) Each tank must be of a circular cross-section and have an MAWP of at least 25 psig.

(c) Any cargo tank motor vehicle built to this specification with a MAWP greater than 35 psig or any cargo tank motor vehicle built to this specification designed to be loaded by vacuum must be constructed and certified in accordance with Section VIII of the ASME Code (IBR, see § 171.7 of this subchapter). The external design pressure for a cargo tank loaded by vacuum must be at least 15 psi.

(d) Any cargo tank motor vehicle built to this specification with a MAWP of 35 psig or less or any cargo tank motor vehicle built to this specification designed to withstand full vacuum but not equipped to be loaded by vacuum must be constructed in accordance with Section VIII of the ASME Code.

(1) The record-keeping requirements contained in Section VIII of the ASME Code do not apply. The inspection requirements of parts UG–90 through 94 do not apply. Inspection and certification must be made by an inspector registered in accordance with subpart F of part 107.

(2) Loadings must be as prescribed in § 178.345–3.

(3) The knuckle radius of flanged heads must be at least three times the

material thickness, and in no case less than 0.5 inch. Stuffed (inserted) heads may be attached to the shell by a fillet weld. The knuckle radius and dish radius versus diameter limitations of UG–32 do not apply for cargo tank motor vehicles with a MAWP of 35 psig or less.

(4) Marking, certification, data reports and nameplates must be as prescribed in §§178.345–14 and 178.345–15.

(5) Manhole closure assemblies must conform to §178.347–3.

(6) Pressure relief devices must be as prescribed in §178.347–4.

(7) The hydrostatic or pneumatic test must be as prescribed in §178.347–5.

(8) The following paragraphs in parts UG and UW in Section VIII the ASME Code do not apply: UG–11, UG–12, UG–22(g), UG–32(e), UG–34, UG–35, UG–44, UG–76, UG–77, UG–80, UG–81, UG–96, UG–97, UW–12, UW–13(b)(2), UW–13.1(f), and the dimensional requirements found in Figure UW–13.1.

(9) UW–12 in Section VIII of the ASME Code does not apply to a weld seam in a bulkhead that has not been radiographically examined, under the following conditions:

(i) The strength of the weld seam is assumed to be 0.85 of the strength of the bulkhead.

(ii) The welded seam must be a full penetration butt weld.

(iii) No more than one seam may be used per bulkhead.

(iv) The welded seam must be completed before forming the dish radius and knuckle radius.

(v) Compliance test: Two test specimens of materials representative of those to be used in the manufacture of a cargo tank bulkhead must be tested to failure in tension. The test specimen must be of the same thickness and joined by the same welding procedure. The test specimens may represent all the tanks that are made in the same facility within 6 months after the tests are completed. Before welding, the fit-up of the joints on the test specimens must represent production conditions that would result in the least joint strength. Evidence of joint fit-up and test results must be retained at the manufacturer's facility for at least 5 years.

(vi) Acceptance criteria: The ratio of the actual tensile stress at failure to the actual tensile strength of the adjacent material of all samples of a test lot must be greater than 0.85.

[Amdt. 178–89, 54 FR 25029, June 12, 1989, as amended at 55 FR 37064, Sept. 7, 1990; Amdt. 178–89, 56 FR 27877, June 17, 1991; 65 FR 58632, Sept. 29, 2000; 66 FR 45387, Aug. 28, 2001; 68 FR 19285, Apr. 18, 2003; 68 FR 75756, Dec. 31, 2003; 76 FR 3388, Jan. 19, 2011; 76 FR 43532, July 20, 2011]

§ 178.347–2 Material and thickness of material.

(a) The type and thickness of material for DOT 407 specification cargo tanks must conform to §178.345–2, but in no case may the thickness be less than that determined by the minimum thickness requirements in §178.320(a). Tables I and II identify the specified minimum thickness values to be employed in that the determination:

TABLE I—SPECIFIED MINIMUM THICKNESS OF HEADS (OR BULKHEADS AND BAFFLES WHEN USED AS TANK REINFORCEMENT) USING MILD STEEL (MS), HIGH STRENGTH LOW ALLOY STEEL (HSLA), AUSTENITIC STAINLESS STEEL (SS), OR ALUMINUM (AL)—EXPRESSED IN DECIMALS OF AN INCH AFTER FORMING

Volume capacity in gallons per inch	10 or less	Over 10 to 14	Over 14 to 18	Over 18 to 22	Over 22 to 26	Over 26 to 30	Over 30
Thickness (MS)	0.100	0.100	0.115	0.129	0.129	0.143	0.156
Thickness (HSLA)	0.100	0.100	0.115	0.129	0.129	0.143	0.156
Thickness (SS)	0.100	0.100	0.115	0.129	0.129	0.143	0.156
Thickness (AL)	0.160	0.160	0.173	0.187	0.194	0.216	0.237

TABLE II—SPECIFIED MINIMUM THICKNESS OF SHELL USING MILD STEEL (MS), HIGH STRENGTH LOW ALLOY STEEL (HSLA), AUSTENITIC STAINLESS STEEL (SS), OR ALUMINUM (AL)—EXPRESSED IN DECIMALS OF AN INCH AFTER FORMING

Volume capacity in gallons per inch	10 or less	Over 10 to 14	Over 14 to 18	Over 18 to 22	Over 22 to 26	Over 26 to 30	Over 30
Thickness (MS)	0.100	0.100	0.115	0.129	0.129	0.143	0.156
Thickness (HSLA)	0.100	0.100	0.115	0.129	0.129	0.143	0.156
Thickness (SS)	0.100	0.100	0.115	0.129	0.129	0.143	0.156
Thickness (AL)	0.151	0.151	0.160	0.173	0.194	0.216	0.237

(b) [Reserved]

[Amdt. 178–89, 54 FR 25030, June 12, 1989, as amended at 55 FR 37064, Sept. 7, 1990; Amdt. 178–104, 59 FR 49135, Sept. 26, 1994; 68 FR 19285, Apr. 18, 2003]

§ 178.347–3 Manhole assemblies.

Each manhole assembly must conform to § 178.345–5, except that each manhole assembly must be capable of withstanding internal fluid pressures of 40 psig or test pressure of the tank, whichever is greater.

[Amdt. 178–89, 54 FR 25030, June 12, 1989. Redesignated by Amdt. 178–112, 61 FR 18934, Apr. 29, 1996]

§ 178.347–4 Pressure relief.

(a) Each cargo tank must be equipped with a pressure and vacuum relief system in accordance with § 178.345–10 and this section.

(b) *Type and construction.* Vacuum relief devices are not required for cargo tank motor vehicles that are designed to be loaded by vacuum in accordance with § 178.347–1(c) or built to withstand full vacuum in accordance with § 178.347–1(d).

(c) *Pressure settings of relief valves.* The setting of pressure relief valves must be in accordance with § 178.345–10(d).

(d) *Venting capacities.* (1) The vacuum relief system must limit the vacuum to less than 80 percent of the design vacuum capability of the cargo tank.

(2) If pressure loading or unloading devices are provided, the relief system must have adequate vapor and liquid capacity to limit the tank pressure to the cargo tank test pressure at maximum loading or unloading rate. The maximum loading or unloading rate must be included on the metal specification plate.

[Amdt. 178–89, 54 FR 25030, June 12, 1989, as amended at 55 FR 37064, Sept. 7, 1990. Redesignated by Amdt. 178–112, 61 FR 18934, Apr. 29, 1996; 76 FR 43532, July 20, 2011]

§ 178.347–5 Pressure and leakage test.

(a) Each cargo tank must be tested in accordance with § 178.345–13 and this section.

(b) *Pressure test.* Test pressure must be as follows:

(1) Using the hydrostatic test method, the test pressure must be at least 40 psig or 1.5 times tank MAWP, whichever is greater.

(2) Using the pneumatic test method, the test pressure must be 40 psig or 1.5 times tank MAWP, whichever is greater, and the inspection pressure is tank MAWP.

[Amdt. 178–89, 54 FR 25030, June 12, 1989. Redesignated by Amdt. 178–112, 61 FR 18934, Apr. 29, 1996]

§ 178.348 Specification DOT 412; cargo tank motor vehicle.

§ 178.348–1 General requirements.

(a) Each specification DOT 412 cargo tank motor vehicle must conform to the general design and construction requirements in § 178.345 in addition to the specific requirements of this section.

(b) The MAWP of each cargo tank must be at least 5 psig.

(c) The MAWP for each cargo tank designed to be loaded by vacuum must

be at least 25 psig internal and 15 psig external.

(d) Each cargo tank having a MAWP greater than 15 psig must be of circular cross-section.

(e) Each cargo tank having a—

(1) MAWP greater than 15 psig must be ''constructed and certified in conformance with Section VIII of the ASME Code'' (IBR, see § 171.7 of this subchapter); or

(2) MAWP of 15 psig or less must be ''constructed in accordance with Section VIII of the ASME Code,'' except as modified herein:

(i) The recordkeeping requirements contained in Section VIII of the ASME Code do not apply. Parts UG–90 through 94 in Section VIII do not apply. Inspection and certification must be made by an inspector registered in accordance with subpart F of part 107.

(ii) Loadings must be as prescribed in § 178.345–3.

(iii) The knuckle radius of flanged heads must be at least three times the material thickness, and in no case less than 0.5 inch. Stuffed (inserted) heads may be attached to the shell by a fillet weld. The knuckle radius and dish radius versus diameter limitations of UG–32 do not apply for cargo tank motor vehicles with a MAWP of 15 psig or less. Shell sections of cargo tanks designed with a non-circular cross section need not be given a preliminary curvature, as prescribed in UG–79(b).

(iv) Marking, certification, data reports, and nameplates must be as prescribed in §§ 178.345–14 and 178.345–15.

(v) Manhole closure assemblies must conform to §§ 178.345–5.

(vi) Pressure relief devices must be as prescribed in § 178.348–4.

(vii) The hydrostatic or pneumatic test must be as prescribed in § 178.348–5.

(viii) The following paragraphs in parts UG and UW in Section VIII of the ASME Code do not apply: UG–11, UG–12, UG–22(g), UG–32(e), UG–34, UG–35, UG–44, UG–76, UG–77, UG–80, UG–81, UG–96, UG–97, UW–13(b)(2), UW–13.1(f), and the dimensional requirements found in Figure UW–13.1.

[Amdt. 178–89, 54 FR 25031, June 12, 1989, as amended at 55 FR 37065, Sept. 7, 1990; Amdt. 178–89, 56 FR 27877, June 17, 1991; 65 FR 58632, Sept. 29, 2000; 68 FR 19285, Apr. 18, 2003; 68 fR 75756, Dec. 31, 2003]

§ 178.348–2 Material and thickness of material.

(a) The type and thickness of material for DOT 412 specification cargo tanks must conform to § 178.345–2, but in no case may the thickness be less than that determined by the minimum thickness requirements in § 178.320(a). The following Tables I and II identify the ''Specified Minimum Thickness'' values to be employed in that determination.

TABLE I—SPECIFIED MINIMUM THICKNESS OF HEADS (OR BULKHEADS AND BAFFLES WHEN USED AS TANK REINFORCEMENT) USING MILD STEEL (MS), HIGH STRENGTH LOW ALLOY STEEL (HSLA), AUSTENITIC STAINLESS STEEL (SS), OR ALUMINUM (AL)—EXPRESSED IN DECIMALS OF AN INCH AFTER FORMING

Volume capacity (gallons per inch)	10 or less				Over 10 to 14				Over 14 to 18			18 and over		
Lading density at 60 °F in pounds per gallon	10 lbs and less	Over 10 to 13 lbs	Over 13 to 16 lbs	Over 16 lbs	10 lbs and less	Over 10 to 13 lbs	Over 13 to 16 lbs	Over 16 lbs	10 lbs and less	Over 10 to 13 lbs	Over 13 to 16 lbs	10 lbs and less	Over 10 to 13 lbs	Over 13 to 16 lbs
Thickness (inch), steel	.100	.129	.157	.187	.129	.157	.187	.250	.157	.250	.250	.157	.250	.312
Thickness (inch), aluminum	.144	.187	.227	.270	.187	.227	.270	.360	.227	.360	.360	.227	.360	.450

TABLE II—SPECIFIED MINIMUM THICKNESS OF SHELL USING MILD STEEL (MS), HIGH STRENGTH LOW ALLOY STEEL (HSLA), AUSTENITIC STAINLESS STEEL (SS), OR ALUMINUM (AL)—EXPRESSED IN DECIMALS OF AN INCH AFTER FORMING

Volume capacity in gallons per inch	10 or less				Over 10 to 14				Over 14 to 18			18 and over		
Lading density at 60 °F in pounds per gallon	10 lbs and less	Over 10 to 13 lbs	Over 13 to 16 lbs	Over 16 lbs	10 lbs and less	Over 10 to 13 lbs	Over 13 to 16 lbs	Over 16 lbs	10 lbs and less	Over 10 to 13 lbs	Over 13 to 16 lbs	10 lbs and less	Over 10 to 13 lbs	Over 13 to 16 lbs
Thickness (steel):														
Distances between heads (and bulkheads baffles and ring stiffeners when used as tank reinforcement):														
36 in. or less	.100	.129	.157	.187	.100	.129	.157	.187	.100	.129	.157	.129	.157	.187
Over 36 in. to 54 inches	.100	.129	.157	.187	.100	.129	.157	.187	.129	.157	.187	.157	.250	.250
Over 54 in. to 60 inches	.100	.129	.157	.187	.129	.157	.187	.250	.157	.250	.250	.187	.250	.312
Thickness (aluminum):														
Distances between heads (and bulkheads baffles and ring stiffeners when used as tank reinforcement):														
36 in. or less	.144	.187	.227	.270	.144	.187	.227	.270	.144	.187	.227	.187	.227	.270
Over 36 in. to 54 inches	.144	.187	.227	.270	.144	.187	.227	.270	.187	.227	.270	.157	.360	.360
Over 54 in. to 60 inches	.144	.187	.227	.270	.187	.227	.270	.360	.227	.360	.360	.270	.360	.450

(b) [Reserved]

[Amdt. 178–89, 54 FR 25031, June 12, 1989; 54 FR 28750, July 7, 1989, as amended at 55 FR 37065, Sept. 7, 1990; 68 FR 19285, Apr. 18, 2003]

§ 178.348–3 Pumps, piping, hoses and connections.

Each pump and all piping, hoses and connections on each cargo tank motor vehicle must conform to § 178.345–9, except that the use of nonmetallic pipes, valves, or connections are authorized on DOT 412 cargo tanks.

[Amdt. 178–89, 55 FR 37065, Sept. 7, 1990. Redesignated by Amdt. 178–112, 61 FR 18934, Apr. 29, 1996]

§ 178.348–4 Pressure relief.

(a) Each cargo tank must be equipped with a pressure and vacuum relief system in accordance with § 178.345–10 and this section.

(b) *Type and construction.* Vacuum relief devices are not required for cargo tanks designed to be loaded by vacuum or built to withstand full vacuum.

(c) *Pressure settings of relief valves.* The setting of the pressure relief devices must be in accordance with § 178.345–10(d), except as provided in paragraph (d)(3) of this section.

(d) *Venting capacities.* (1) The vacuum relief system must limit the vacuum to less than 80 percent of the design vacuum capability of the cargo tank.

(2) If pressure loading or unloading devices are provided, the pressure relief system must have adequate vapor and liquid capacity to limit tank pressure to the cargo tank test pressure at the maximum loading or unloading rate. The maximum loading and unloading rates must be included on the metal specification plate.

(3) Cargo tanks used in dedicated service for materials classed as corrosive material, with no secondary hazard, may have a total venting capacity which is less than required by § 178.345–10(e). The minimum total venting capacity for these cargo tanks must be determined in accordance with the following formula (use of approximate values given for the formula is acceptable):

Formula in Nonmetric Units

$$Q = 37{,}980{,}000\ A^{0.82}\ (ZT)^{0.5} / (LC)(M^{0.5})$$

Where:

Q = The total required venting capacity, in cubic meters of air per hour at standard conditions of 15.6 °C and 1 atm (cubic feet of air per hour at standard conditions of 60 °F and 14.7 psia);

T = The absolute temperature of the vapor at the venting conditions—degrees Kelvin (°C+273) [degrees Rankine (°F+460)];

A = The exposed surface area of tank shell—square meters (square feet);

L = The latent heat of vaporization of the lading—calories per gram (BTU/lb);

Z = The compressibility factor for the vapor (if this factor is unknown, let Z equal 1.0);

M = The molecular weight of vapor;

C = A constant derived from (K), the ratio of specific heats of the vapor. If (K) is unknown, let C = 315.

$$C = 520[K(2/(K+1))^{[(K+1)/(K-1)]}]^{0.5}$$

Where:

$K = C_p / C_v$

C_p = The specific heat at constant pressure, in -calories per gram degree centigrade (BTU/lb °F.); and

C_v = The specific heat at constant volume, in -calories per gram degree centigrade (BTU/lb °F.).

[Amdt. 178–89, 54 FR 25032, June 12, 1989, as amended at 55 FR 37065, Sept. 7, 1990; Amdt. 178–104, 59 FR 49135, Sept. 26, 1994. Redesignated by Amdt. 178–112, 61 FR 18934, Apr. 29, 1996; 72 FR 55696, Oct. 1, 2007; 72 FR 59146, Oct. 18, 2007]

§ 178.348–5 Pressure and leakage test.

(a) Each cargo tank must be tested in accordance with § 178.345–13 and this section.

(b) Pressure test. Test pressure must be as follows:

(1) Using the hydrostatic test method, the test pressure must be at least 1.5 times MAWP.

(2) Using the pneumatic test method, the test pressure must be at least 1.5 times tank MAWP, and the inspection pressure is tank MAWP.

[Amdt. 178–89, 54 FR 25032, June 12, 1989. Redesignated by Amdt. 178–112, 61 FR 18934, Apr. 29, 1996]

Subpart K—Specifications for Packagings for Class 7 (Radioactive) Materials

§ 178.350 Specification 7A; general packaging, Type A.

(a) Each packaging must meet all applicable requirements of subpart B of part 173 of this subchapter and be designed and constructed so that it meets the requirements of §§ 173.403, 173.410, 173.412, 173.415 and 173.465 of this subchapter for Type A packaging.

(b) Each Specification 7A packaging must be marked on the outside ''USA DOT 7A Type A.''

(c) Each Specification 7A packaging must comply with the requirements of §§ 178.2 and 178.3. In § 178.3(a)(2) the term ''packaging manufacturer'' means the person certifying that the package meets all requirements of this section.

[Amdt. 178–109, 60 FR 50336, Sept. 28, 1995; 60 FR 54409, Oct. 23, 1995, as amended at 69 FR 3696, Jan. 26, 2004; 70 FR 56099, Sept. 23, 2005; 79 FR 40618, July 11, 2014]

Subpart L—Non-bulk Performance-Oriented Packaging Standards

SOURCE: Amdt. 178–97, 55 FR 52717, Dec. 21, 1990, unless otherwise noted.

§ 178.500 Purpose, scope and definitions.

(a) This subpart prescribes certain requirements for non-bulk packagings for hazardous materials. Standards for these packagings are based on the UN Recommendations.

(b) Terms used in this subpart are defined in § 171.8 of this subchapter.

§ 178.502 Identification codes for packagings.

(a) Identification codes for designating kinds of packagings consist of the following:

(1) A numeral indicating the kind of packaging, as follows:

(i) ''1'' means a drum.

(ii) ''2'' means a wooden barrel.

(iii) ''3'' means a jerrican.

(iv) ''4'' means a box.

(v) ''5'' means a bag.

(vi) ''6'' means a composite packaging.

(vii) ''7'' means a pressure receptacle.

(2) A capital letter indicating the material of construction, as follows:

(i) ''A'' means steel (all types and surface treatments).

(ii) ''B'' means aluminum.

(iii) ''C'' means natural wood.

(iv) ''D'' means plywood.

(v) ''F'' means reconstituted wood.

(vi) ''G'' means fiberboard.

(vii) ''H'' means plastic.

(viii) ''L'' means textile.

(ix) ''M'' means paper, multi-wall.

(x) ''N'' means metal (other than steel or aluminum).

(xi) ''P'' means glass, porcelain or stoneware.

(3) A numeral indicating the category of packaging within the kind to which the packaging belongs. For example, for steel drums (''1A''), ''1'' indicates a non-removable head drum (i.e., ''1A1'') and ''2'' indicates a removable head drum (i.e., ''1A2'').

(b) For composite packagings, two capital letters are used in sequence in the second position of the code, the first indicating the material of the inner receptacle and the second, that of the outer packaging. For example, a plastic receptacle in a steel drum is designated ''6HA1''.

(c) For combination packagings, only the code number for the outer packaging is used.

(d) Identification codes are set forth in the standards for packagings in §§ 178.504 through 178.523 of this subpart.

NOTE TO § 178.502: Plastics materials include other polymeric materials such as rubber.

[Amdt. 178–97, 55 FR 52717, Dec. 21, 1990, as amended by Amdt. 178–106, 59 FR 67519, Dec. 29, 1994; 74 FR 2269, Jan. 14, 2009]

§ 178.503 Marking of packagings.

(a) A manufacturer must mark every packaging that is represented as manufactured to meet a UN standard with the marks specified in this section. The markings must be durable, legible and placed in a location and of such a size relative to the packaging as to be readily visible, as specified in § 178.3(a). Except as otherwise provided in this section, every reusable packaging liable to undergo a reconditioning process which might obliterate the packaging

marks must bear the marks specified in paragraphs (a)(1) through (a)(6) and (a)(9) of this section in a permanent form (e.g. embossed) able to withstand the reconditioning process. A marking may be applied in a single line or in multiple lines provided the correct sequence is used. As illustrated by the examples in paragraph (e) of this section, the following information must be presented in the correct sequence. Slash marks should be used to separate this information. A packaging conforming to a UN standard must be marked as follows:

(1) Except as provided in paragraph (e)(1)(ii) of this section, the United Nations symbol as illustrated in paragraph (e)(1)(i) of this section (for embossed metal receptacles, the letters ''UN'' may be applied in place of the symbol);

(2) A packaging identification code designating the type of packaging, the material of construction and, when appropriate, the category of packaging under §§178.504 through 178.523 of this subpart within the type to which the packaging belongs. The letter ''V'' must follow the packaging identification code on packagings tested in accordance with §178.601(g)(2); for example, ''4GV''. The letter ''W'' must follow the packaging identification code on packagings when required by an approval under the provisions of §178.601(h) of this part;

(3) A letter identifying the performance standard under which the packaging design type has been successfully tested, as follows:

(i) X—for packagings meeting Packing Group I, II and III tests;

(ii) Y—for packagings meeting Packing Group II and III tests; or

(iii) Z—for packagings only meeting Packing Group III tests;

(4) A designation of the specific gravity or mass for which the packaging design type has been tested, as follows:

(i) For packagings without inner packagings intended to contain liquids, the designation shall be the specific gravity rounded down to the first decimal but may be omitted when the specific gravity does not exceed 1.2; and

(ii) For packagings intended to contain solids or inner packagings, the designation shall be the maximum gross mass in kilograms;

(5)(i) For single and composite packagings intended to contain liquids, the test pressure in kilopascals rounded down to the nearest 10 kPa of the hydrostatic pressure test that the packaging design type has successfully passed;

(ii) For packagings intended to contain solids or inner packagings, the letter ''S'';

(6) The last two digits of the year of manufacture. Packagings of types 1H and 3H shall also be marked with the month of manufacture in any appropriate manner; this may be marked on the packaging in a different place from the remainder of the markings;

(7) The state authorizing allocation of the mark. The letters 'USA' indicate that the packaging is manufactured and marked in the United States in compliance with the provisions of this subchapter;

(8) The name and address or symbol of the manufacturer or the approval agency certifying compliance with subpart L and subpart M of this part. Symbols, if used, must be registered with the Associate Administrator;

(9) For metal or plastic drums or jerricans intended for reuse or reconditioning as single packagings or the outer packagings of a composite packaging, the thickness of the packaging material, expressed in mm (rounded to the nearest 0.1 mm), as follows:

(i) Metal drums or jerricans must be marked with the nominal thickness of the metal used in the body. The marked nominal thickness must not exceed the minimum thickness of the steel used by more than the thickness tolerance stated in ISO 3574 (IBR, see §171.7 of this subchapter). (See appendix C of this part.) The unit of measure is not required to be marked. When the nominal thickness of either head of a metal drum is thinner than that of the body, the nominal thickness of the top head, body, and bottom head must be marked (*e.g.*, ''1.0–1.2–1.0'' or ''0.9–1.0–1.0'').

(ii) Plastic drums or jerricans must be marked with the minimum thickness of the packaging material. Minimum thicknesses of plastic must be as determined in accordance with

§ 173.28(b)(4). The unit of measure is not required to be marked;

(10) In addition to the markings prescribed in paragraphs (a)(1) through (a)(9) of this section, every new metal drum having a capacity greater than 100 L must bear the marks described in paragraphs (a)(1) through (a)(6), and (a)(9)(i) of this section, in a permanent form, on the bottom. The markings on the top head or side of these packagings need not be permanent, and need not include the thickness mark described in paragraph (a)(9) of this section. This marking indicates a drum's characteristics at the time it was manufactured, and the information in paragraphs (a)(1) through (a)(6) of this section that is marked on the top head or side must be the same as the information in paragraphs (a)(1) through (a)(6) of this section permanently marked by the original manufacturer on the bottom of the drum; and

(11) Rated capacity of the packaging expressed in liters may be marked.

(b) For a packaging with a removable head, the markings may not be applied only to the removable head.

(c) *Marking of reconditioned packagings.* (1) If a packaging is reconditioned, it shall be marked by the reconditioner near the marks required in paragraphs (a)(1) through (6) of this section with the following additional information:

(i) The name of the country in which the reconditioning was performed (in the United States, use the letters ''USA'');

(ii) The name and address or symbol of the reconditioner. Symbols, if used, must be registered with the Associate Administrator;

(iii) The last two digits of the year of reconditioning;

(iv) The letter ''R''; and

(v) For every packaging successfully passing a leakproofness test, the additional letter ''L''.

(2) When, after reconditioning, the markings required by paragraph (a)(1) through (a)(5) of this section no longer appear on the top head or the side of the metal drum, the reconditioner must apply them in a durable form followed by the markings in paragraph (c)(1) of this section. These markings may identify a different performance capability than that for which the original design type had been tested and marked, but may not identify a greater performance capability. The markings applied in accordance with this paragraph may be different from those which are permanently marked on the bottom of a drum in accordance with paragraph (a)(10) of this section.

(d) *Marking of remanufactured packagings.* For remanufactured metal drums, if there is no change to the packaging type and no replacement or removal of integral structural components, the required markings need not be permanent (e.g., embossed). Every other remanufactured drum must bear the marks required in paragraphs (a)(1) through (a)(6) of this section in a permanent form (e.g., embossed) on the top head or side. If the metal thickness marking required in paragraph (a)(9)(i) of this section does not appear on the bottom of the drum, or if it is no longer valid, the remanufacturer also must mark this information in permanent form.

(e) *The following are examples of symbols and required* markings.

(1)(i) The United Nations symbol is:

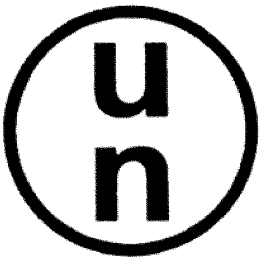

(ii) The circle that surrounds the letters ''u'' and ''n'' may have small breaks provided the following provisions are met:

(A) The total gap space does not exceed 15 percent of the circumference of the circle;

(B) There are no more than four gaps in the circle;

C) The spacing between gaps is separated by no less than 20 percent of the circumference of the circle (72 degrees); and

D) The letters ''u'' and ''n'' appear exactly as depicted in §178.503(e)(1)(i) with no gaps.

(2) Examples of markings for a new packaging are as follows:

(i) For a fiberboard box designed to contain an inner packaging:

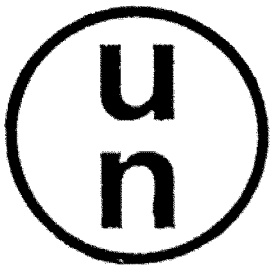

4G/Y145/S/83

USA/RA

(as in §178.503 (a)(1) through (9) of this subpart).

(ii) For a steel drum designed to contain liquids:

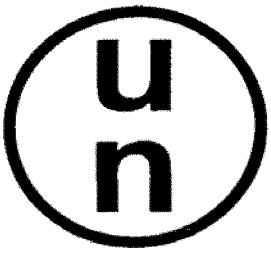

1A1/Y1.4/150/83

USA/VL824

1.0

(as in §178.503 (a)(1) through (10) of this subpart).

(iii) For a steel drum to transport solids or inner packagings:

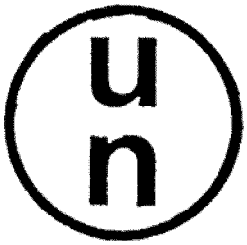

1A2/Y150/S/83

USA/VL825

(as in § 178.503 (a)(1) through (8) of this subpart).

(3) Examples of markings for reconditioned packagings are as follows:

1A1/Y1.4/150/92
USA/RB/93 RL

(as in § 178.503(c)(1)).

(f) A manufacturer must mark every UN specification package represented as manufactured to meet the requirements of § 178.609 for packaging of infectious substances with the marks specified in this section. The markings must be durable, legible, and must be readily visible, as specified in § 178.3(a). An infectious substance packaging that successfully passes the tests conforming to the UN standard must be marked as follows:

(1) The United Nations symbol as illustrated in paragraph (e) of this section.

(2) The code designating the type of packaging and material of construction according to the identification codes for packagings specified in § 178.502.

(3) The text ''CLASS 6.2''.

(4) The last two digits of the year of manufacture of the packaging.

(5) The country authorizing the allocation of the mark. The letters ''USA'' indicate the packaging is manufactured and marked in the United States in compliance with the provisions of this subchapter.

(6) The name and address or symbol of the manufacturer or the approval agency certifying compliance with subparts L and M of this part. Symbols, if used, must be registered with the Associate Administrator for Hazardous Materials Safety.

(7) For packagings meeting the requirements of § 178.609(i)(3), the letter ''U'' must be inserted immediately following the marking designating the type of packaging and material required in paragraph (f)(2) of this section.

[Amdt. 178–97, 55 FR 52717, Dec. 21, 1990, as amended at 56 FR 66284, Dec. 20, 1991; Amdt. 178–102, 59 FR 28493, June 2, 1994; Amdt. 178–106, 59 FR 67520, 67521, Dec. 29, 1994; Amdt. 178–107, 60 FR 26806, May 18, 1995; 62 FR 51561, Oct. 1, 1997; 66 FR 45386, Aug. 28, 2001; 67 FR 61016, Sept. 27, 2002; 67 FR 53143, Aug. 14, 2002; 68 FR 75757, Dec. 31, 2003; 75 FR 5395, Feb. 2, 2010; 75 FR 60339, Sept. 30, 2010; 77 FR 60943, Oct. 5, 2012; 78 FR 60755, Oct. 2, 2013]

§ 178.504 Standards for steel drums.

(a) The following are identification codes for steel drums:

(1) 1A1 for a non-removable head steel drum; and

(2) 1A2 for a removable head steel drum.

(b) Construction requirements for steel drums are as follows:

(1) Body and heads must be constructed of steel sheet of suitable type and adequate thickness in relation to the capacity and intended use of the drum. Minimum thickness and marking requirements in §§ 173.28(b)(4) and 178.503(a)(9) of this subchapter apply to drums intended for reuse.

(2) Body seams must be welded on drums designed to contain more than 40 L (11 gallons) of liquids. Body seams must be mechanically seamed or welded on drums intended to contain only solids or 40 L (11 gallons) or less of liquids.

(3) Chimes must be mechanically seamed or welded. Separate reinforcing rings may be applied.

(4) The body of a drum of a capacity greater than 60 L (16 gallons) may have at least two expanded rolling hoops or two separate rolling hoops. If there are separate rolling hoops, they must be

fitted tightly on the body and so secured that they cannot shift. Rolling hoops may not be spot-welded.

(5) Openings for filling, emptying and venting in the bodies or heads of non-removable head (1A1) drums may not exceed 7.0 cm (3 inches) in diameter. Drums with larger openings are considered to be of the removable head type (1A2). Closures for openings in the bodies and heads of drums must be so designed and applied that they will remain secure and leakproof under normal conditions of transport. Closure flanges may be mechanically seamed or welded in place. Gaskets or other sealing elements must be used with closures unless the closure is inherently leakproof.

(6) Closure devices for removable head drums must be so designed and applied that they will remain secure and drums will remain leakproof under normal conditions of transport. Gaskets or other sealing elements must be used with all removable heads.

(7) If materials used for body, heads, closures, and fittings are not in themselves compatible with the contents to be transported, suitable internal protective coatings or treatments must be applied. These coatings or treatments must retain their protective properties under normal conditions of transport.

(8) Maximum capacity of drum: 450 L (119 gallons).

(9) Maximum net mass: 400 kg (882 pounds).

[Amdt. 178–97, 55 FR 52717, Dec. 21, 1990, as amended at 56 FR 66284, Dec. 20, 1991; Amdt. 178–110, 60 FR 49111, Sept. 21, 1995]

§ 178.505 Standards for aluminum drums.

(a) The following are the identification codes for aluminum drums:

(1) 1B1 for a non-removable head aluminum drum; and

(2) 1B2 for a removable head aluminum drum.

(b) Construction requirements for aluminum drums are as follows:

(1) Body and heads must be constructed of aluminum at least 99 percent pure or an aluminum base alloy. Material must be of suitable type and adequate thickness in relation to the capacity and the intended use of the drum. Minimum thickness and marking requirements in §§173.28(b)(4) and 178.503(a)(9) of this subchapter apply to drums intended for reuse.

(2) All seams must be welded. Chime seams, if any, must be reinforced by the application of separate reinforcing rings.

(3) The body of a drum of a capacity greater than 60 L (16 gallons) may have at least two expanded rolling hoops or two separate rolling hoops. If there are separate rolling hoops, the hoops must be fitted tightly on the body and so secured that they cannot shift. Rolling hoops may not be spot-welded.

(4) Openings for filling, emptying, or venting in the bodies or heads of non-removable head (1B1) drums may not exceed 7.0 cm (3 inches) in diameter. Drums with larger openings are considered to be of the removable head type (1B2). Closures for openings in the bodies and heads of drums must be so designed and applied that they will remain secure and leakproof under normal conditions of transport. Closure flanges may be welded in place so that the weld provides a leakproof seam. Gaskets or other sealing elements must be used with closures unless the closure is inherently leakproof.

(5) Closure devices for removable head drums must be so designed and applied that they remain secure and drums remain leakproof under normal conditions of transport. Gaskets or other sealing elements must be used with all removable heads.

(6) Maximum capacity of drum: 450 L (119 gallons).

(7) Maximum net mass: 400 kg (882 pounds).

[Amdt. 178–97, 55 FR 52717, Dec. 21, 1990, as amended at 56 FR 66284, Dec. 20, 1991; Amdt. 178–102, 59 FR 28494, June 2, 1994]

§ 178.506 Standards for metal drums other than steel or aluminum.

(a) The following are the identification codes for metal drums other than steel or aluminum:

(1) 1N1 for a non-removable head metal drum; and

(2) 1N2 for a removable head metal drum.

(b) Construction requirements for metal drums other than steel or aluminum are as follows:

(1) Body and heads must be constructed of metal (other than steel or aluminum) of suitable type and adequate thickness in relation to the capacity and the intended use of the drum. Minimum thickness and marking requirements in §§173.28(b)(4) and 178.503(a)(9) of this subchapter apply to drums intended for reuse.

(2) All seams must be welded. Chime seams, if any, must be reinforced by the application of separate reinforcing rings.

(3) The body of a drum of a capacity greater than 60 L (16 gallons) may have at least two expanded rolling hoops or two separate rolling hoops. If there are separate rolling hoops, the hoops must be fitted tightly on the body and so secured that they cannot shift. Rolling hoops may not be spot-welded.

(4) Openings for filling, emptying, or venting in the bodies or heads of nonremovable head (1N1) drums may not exceed 7.0 cm (3 inches) in diameter. Drums with larger openings are considered to be of the removable head type (1N2). Closures for openings in the bodies and heads of drums must be so designed and applied that they will remain secure and leakproof under normal conditions of transport. Closure flanges may be welded in place so that the weld provides a leakproof seam. Gaskets or other sealing elements must be used with closures unless the closure is inherently leakproof.

(5) Closure devices for removable head drums must be so designed and applied that they remain secure and drums remain leakproof under normal conditions of transport. Gaskets or other sealing elements must be used with all removable heads.

(6) Maximum capacity of drum: 450 L (119 gallons).

(7) Maximum net mass: 400 kg (882 pounds).

[Amdt. 178–97, 55 FR 52717, Dec. 21, 1990, as amended at 56 FR 66285, Dec. 20, 1991; Amdt. 178–102, 59 FR 28494, June 2, 1994]

§ 178.507 Standards for plywood drums.

(a) The identification code for a plywood drum is 1D.

(b) Construction requirements for plywood drums are as follows:

(1) The wood used must be well-seasoned, commercially dry and free from any defect likely to lessen the effectiveness of the drum for the purpose intended. A material other than plywood, of at least equivalent strength and durability, may be used for the manufacture of the heads.

(2) At least two-ply plywood must be used for the body and at least three-ply plywood for the heads; the plies must be firmly glued together, with their grains crosswise.

(3) The body and heads of the drum and their joints must be of a design appropriate to the capacity of the drum and its intended use.

(4) In order to prevent sifting of the contents, lids must be lined with kraft paper or some other equivalent material which must be securely fastened to the lid and extend to the outside along its full circumference.

(5) Maximum capacity of drum: 250 L (66 gallons).

(6) Maximum net mass: 400 kg (882 pounds).

[Amdt. 178–97, 55 FR 52717, Dec. 21, 1990, as amended at 57 FR 45465, Oct. 1, 1992]

§ 178.508 Standards for fiber drums.

(a) The identification code for a fiber drum is 1G.

(b) Construction requirements for fiber drums are as follows:

(1) The body of the drum must be constructed of multiple plies of heavy paper or fiberboard (without corrugations) firmly glued or laminated together and may include one or more protective layers of bitumen, waxed kraft paper, metal foil, plastic material, or similar materials.

(2) Heads must be of natural wood, fiberboard, metal, plywood, plastics, or other suitable material and may include one or more protective layers of bitumen, waxed kraft paper, metal foil, plastic material, or similar material.

(3) The body and heads of the drum and their joints must be of a design appropriate to the capacity and intended use of the drum.

(4) The assembled packaging must be sufficiently water-resistant so as not to delaminate under normal conditions of transport.

(5) Maximum capacity of drum: 450 L (119 gallons).

(6) Maximum net mass: 400 kg (882 pounds).

[Amdt. 178–97, 55 FR 52717, Dec. 21, 1990, as amended by Amdt. 178–106, 59 FR 67521, Dec. 29, 1994]

§ 178.509 Standards for plastic drums and jerricans.

(a) The following are identification codes for plastic drums and jerricans:

(1) 1H1 for a non-removable head plastic drum;

(2) 1H2 for a removable head plastic drum;

(3) 3H1 for a non-removable head jerrican; and

(4) 3H2 for a removable head jerrican.

(b) Construction requirements for plastic drums and jerricans are as follows:

(1) The packaging must be manufactured from suitable plastic material and be of adequate strength in relation to its capacity and intended use. No used material other than production residues or regrind from the same manufacturing process may be used unless approved by the Associate Administrator. The packaging must be adequately resistant to aging and to degradation caused either by the substance contained or by ultra-violet radiation. Any permeation of the substance contained may not constitute a danger under normal conditions of transport.

(2) If protection against ultra-violet radiation is required, it must be provided by the addition of carbon black or other suitable pigments or inhibitors. These additives must be compatible with the contents and remain effective throughout the life of the packaging. Where use is made of carbon black, pigments or inhibitors other than those used in the manufacture of the design type, retesting may be omitted if the carbon black content does not exceed 2 percent by mass or if the pigment content does not exceed 3 percent by mass; the content of inhibitors of ultra-violet radiation is not limited.

(3) Additives serving purposes other than protection against ultra-violet radiation may be included in the composition of the plastic material provided they do not adversely affect the chemical and physical properties of the packaging material.

(4) The wall thickness at every point of the packaging must be appropriate to its capacity and its intended use, taking into account the stresses to which each point is liable to be exposed. Minimum thickness and marking requirements in §§173.28(b)(4) and 178.503(a)(9) of this subchapter apply to drums intended for reuse.

(5) Openings for filling, emptying and venting in the bodies or heads of non-removable head (1H1) drums and jerricans (3H1) may not exceed 7.0 cm (3 inches) in diameter. Drums and jerricans with larger openings are considered to be of the removable head type (1H2 and 3H2). Closures for openings in the bodies or heads of drums and jerricans must be so designed and applied that they remain secure and leakproof under normal conditions of transport. Gaskets or other sealing elements must be used with closures unless the closure is inherently leakproof.

(6) Closure devices for removable head drums and jerricans must be so designed and applied that they remain secure and leakproof under normal conditions of transport. Gaskets must be used with all removable heads unless the drum or jerrican design is such that when the removable head is properly secured, the drum or jerrican is inherently leakproof.

(7) Maximum capacity of drums and jerricans: 1H1, 1H2: 450 L (119 gallons); 3H1, 3H2: 60 L (16 gallons).

(8) Maximum net mass: 1H1, 1H2: 400 kg (882 pounds); 3H1, 3H2: 120 kg (265 pounds).

[Amdt. 178–97, 55 FR 52717, Dec. 21, 1990, as amended by Amdt. 178–102, 59 FR 28494, June 2, 1994; 64 FR 10782, Mar. 5, 1999; 66 FR 45386, Aug. 28, 2001]

§ 178.510 Standards for wooden barrels.

(a) The following are identification codes for wooden barrels:

(1) 2C1 for a bung type wooden barrel; and

(2) 2C2 for a slack type (removable head) wooden barrel.

(b) Construction requirements for wooden barrels are as follows:

(1) The wood used must be of good quality, straight-grained, well-seasoned and free from knots, bark, rotten wood, sapwood or other defects likely

to lessen the effectiveness of the barrel for the purpose intended.

(2) The body and heads must be of a design appropriate to the capacity and intended use of the barrel.

(3) Staves and heads must be sawn or cleft with the grain so that no annual ring extends over more than half the thickness of a stave or head.

(4) Barrel hoops must be of steel or iron of good quality. The hoops of 2C2 barrels may be of a suitable hardwood.

(5) For wooden barrels 2C1, the diameter of the bung-hole may not exceed half the width of the stave in which it is placed.

(6) For wooden barrels 2C2, heads must fit tightly into crozes.

(7) Maximum capacity of barrel: 250 L (66 gallons).

(8) Maximum net mass: 400 kg (882 pounds).

§ 178.511 Standards for aluminum and steel jerricans.

(a) The following are identification codes for aluminum and steel jerricans:

(1) 3A1 for a non-removable head steel jerrican;

(2) 3A2 for a removable head steel jerrican;

(3) 3B1 for a non-removable head aluminum jerrican; and

(4) 3B2 for a removable head aluminum jerrican.

(b) Construction requirements for aluminum and steel jerricans are as follows:

(1) For steel jerricans the body and heads must be constructed of steel sheet of suitable type and adequate thickness in relation to the capacity of the jerrican and its intended use. Minimum thickness and marking requirements in §§173.28(b)(4) and 178.503(a)(9) of this subchapter apply to jerricans intended for reuse.

(2) For aluminum jerricans the body and heads must be constructed of aluminum at least 99% pure or of an aluminum base alloy. Material must be of a type and of adequate thickness in relation to the capacity of the jerrican and to its intended use.

(3) Chimes of all jerricans must be mechanically seamed or welded. Body seams of jerricans intended to carry more than 40 L (11 gallons) of liquid must be welded. Body seams of jerricans intended to carry 40 L (11 gallons) or less must be mechanically seamed or welded.

(4) Openings in jerricans (3A1) may not exceed 7.0 cm (3 inches) in diameter. Jerricans with larger openings are considered to be of the removable head type. Closures must be so designed that they remain secure and leakproof under normal conditions of transport. Gaskets or other sealing elements must be used with closures, unless the closure is inherently leakproof.

(5) If materials used for body, heads, closures and fittings are not in themselves compatible with the contents to be transported, suitable internal protective coatings or treatments must be applied. These coatings or treatments must retain their protective properties under normal conditions of transport.

(6) Maximum capacity of jerrican: 60 L (16 gallons).

(7) Maximum net mass: 120 kg (265 pounds).

[Amdt. 178–97, 55 FR 52717, Dec. 21, 1990, as amended by Amdt. 178–102, 59 FR 28494, June 2, 1994; Amdt. 178–119, 62 FR 24742, May 6, 1997]

§ 178.512 Standards for steel, aluminum or other metal boxes.

(a) The following are identification codes for steel, aluminum, or other metal boxes:

(1) 4A for a steel box;

(2) 4B for an aluminum box; and

(3) 4N for an other metal box.

(b) Construction requirements for steel, aluminum or other metal boxes are as follows:

(1) The strength of the metal and the construction of the box must be appropriate to the capacity and intended use of the box.

(2) Boxes must be lined with fiberboard or felt packing pieces or must have an inner liner or coating of suitable material in accordance with subpart C of part 173 of this subchapter. If a double seamed metal liner is used, steps must be taken to prevent the ingress of materials, particularly explosives, into the recesses of the seams.

(3) Closures may be of any suitable type, and must remain secure under normal conditions of transport.

(4) Maximum net mass: 400 kg (882 pounds).

[Amdt. 178–97, 55 FR 52717, Dec. 21, 1990, as amended by Amdt. 178–106, 59 FR 67521, Dec. 29, 1994; 78 FR 1096, Jan. 7, 2013]

§ 178.513 Standards for boxes of natural wood.

(a) The following are the identification codes for boxes of natural wood:

(1) 4C1 for an ordinary box; and

(2) 4C2 for a box with sift-proof walls.

(b) Construction requirements for boxes of natural wood are as follows:

(1) The wood used must be well-seasoned, commercially dry and free from defects that would materially lessen the strength of any part of the box. The strength of the material used and the method of construction must be appropriate to the capacity and intended use of the box. The tops and bottoms may be made of water-resistant reconstituted wood such as hard board, particle board or other suitable type.

(2) Fastenings must be resistant to vibration experienced under normal conditions of transportation. End grain nailing must be avoided whenever practicable. Joints which are likely to be highly stressed must be made using clenched or annular ring nails or equivalent fastenings.

(3) Each part of the 4C2 box must be one piece or equivalent. Parts are considered equivalent to one piece when one of the following methods of glued assembly is used: Linderman joint, tongue and groove joint, ship lap or rabbet joint, or butt joint with at least two corrugated metal fasteners at each joint.

(4) Maximum net mass: 400 kg (882 pounds).

[Amdt. 178–97, 55 FR 52717, Dec. 21, 1990, as amended by Amdt. 178–106, 59 FR 67521, Dec. 29, 1994]

§ 178.514 Standards for plywood boxes.

(a) The identification code for a plywood box is 4D.

(b) Construction requirements for plywood boxes are as follows:

(1) Plywood used must be at least 3 ply. It shall be made from well-seasoned rotary cut, sliced or sawn veneer, commercially dry and free from defects that would materially lessen the strength of the box. The strength of the material used and the method of construction must be appropriate to the capacity and intended use of the box. All adjacent plies must be glued with water-resistant adhesive. Other suitable materials may be used together with plywood in the construction of boxes. Boxes must be nailed or secured to corner posts or ends or assembled with other equally suitable devices.

(2) Maximum net mass: 400 kg (882 pounds).

§ 178.515 Standards for reconstituted wood boxes.

(a) The identification code for a reconstituted wood box is 4F.

(b) Construction requirements for reconstituted wood boxes are as follows:

(1) The walls of boxes must be made of water-resistant, reconstituted wood such as hardboard, particle board, or other suitable type. The strength of the material used and the method of construction must be appropriate to the capacity of the boxes and their intended use.

(2) Other parts of the box may be made of other suitable materials.

(3) Boxes must be securely assembled by means of suitable devices.

(4) Maximum net mass: 400 kg (882 pounds).

§ 178.516 Standards for fiberboard boxes.

(a) The identification code for a fiberboard box is 4G.

(b) Construction requirements for fiberboard boxes are as follows:

(1) Strong, solid or double-faced corrugated fiberboard (single or multiwall) must be used, appropriate to the capacity and intended use of the box. The water resistance of the outer surface must be such that the increase in mass, as determined in a test carried out over a period of 30 minutes by the Cobb method of determining water absorption, is not greater than 155 g per square meter (0.0316 pounds per square foot)—see ISO 535 (IBR, see § 171.7 of this subchapter). Fiberboard must have proper bending qualities. Fiberboard must be cut, creased without cutting through any thickness of fiberboard, and slotted so as to permit assembly without cracking, surface breaks, or

undue bending. The fluting of corrugated fiberboard must be firmly glued to the facings.

(2) The ends of boxes may have a wooden frame or be entirely of wood or other suitable material. Reinforcements of wooden battens or other suitable material may be used.

(3) Manufacturing joints. (i) Manufacturing joints in the bodies of boxes must be—

(A) Taped;

(B) Lapped and glued; or

(C) Lapped and stitched with metal staples.

(ii) Lapped joints must have an appropriate overlap.

(4) Where closing is effected by gluing or taping, a water resistant adhesive must be used.

(5) Boxes must be designed so as to provide a snug fit to the contents.

(6) Maximum net mass: 400 kg (882 pounds).

(7) Authorization to manufacture, mark, and sell UN4G combination packagings with outer fiberboard boxes and with inner fiberboard components that have individual containerboard or paper wall basis weights that vary by not more than plus or minus 5% from the nominal basis weight reported in the initial design qualification test report.

[Amdt. 178–97, 55 FR 52717, Dec. 21, 1990, and amended by Amdt. 178–99, 58 FR 51534, Oct. 1, 1993; Amdt. 178–106, 59 FR 67521, Dec. 29, 1994; 68 FR 75758, Dec. 31, 2003; 79 FR 15046, Mar. 18, 2014]

§ 178.517 Standards for plastic boxes.

(a) The following are identification codes for plastic boxes:

(1) 4H1 for an expanded plastic box; and

(2) 4H2 for a solid plastic box.

(b) Construction requirements for plastic boxes are as follows:

(1) The box must be manufactured from suitable plastic material and be of adequate strength in relation to its capacity and intended use. The box must be adequately resistant to aging and to degradation caused either by the substance contained or by ultraviolet radiation.

(2) An expanded plastic box must consist of two parts made of a molded expanded plastic material: a bottom section containing cavities for the inner receptacles, and a top section covering and interlocking with the bottom section. The top and bottom sections must be so designed that the inner receptacles fit snugly. The closure cap for any inner receptacle may not be in contact with the inside of the top section of the box.

(3) For transportation, an expanded plastic box must be closed with a self-adhesive tape having sufficient tensile strength to prevent the box from opening. The adhesive tape must be weather-resistant and its adhesive compatible with the expanded plastic material of the box. Other closing devices at least equally effective may be used.

(4) For solid plastic boxes, protection against ultra-violet radiation, if required, must be provided by the addition of carbon black or other suitable pigments or inhibitors. These additives must be compatible with the contents and remain effective throughout the life of the box. Where use is made of carbon black pigment or inhibitors other than those used in the manufacture of the tested design type, retesting may be waived if the carbon black content does not exceed 2 percent by mass or if the pigment content does not exceed 3 percent by mass; the content of inhibitors of ultra-violet radiation is not limited.

(5) Additives serving purposes other than protection against ultra-violet radiation may be included in the composition of the plastic material if they do not adversely affect the material of the box. Addition of these additives does not change the design type.

(6) Solid plastic boxes must have closure devices made of a suitable material of adequate strength and so designed as to prevent the box from unintentionally opening.

(7) Maximum net mass 4H1: 60 kg (132 pounds); 4H2: 400 kg (882 pounds).

§ 178.518 Standards for woven plastic bags.

(a) The following are identification codes for woven plastic bags:

(1) 5H1 for an unlined or non-coated woven plastic bag;

(2) 5H2 for a sift-proof woven plastic bag; and

(3) 5H3 for a water-resistant woven plastic bag.

(b) Construction requirements for woven plastic fabric bags are as follows:

(1) Bags must be made from stretched tapes or monofilaments of a suitable plastic material. The strength of the material used and the construction of the bag must be appropriate to the capacity and intended use of the bag.

(2) If the fabric is woven flat, the bags must be made by sewing or some other method ensuring closure of the bottom and one side. If the fabric is tubular, the bag must be closed by sewing, weaving, or some other equally strong method of closure.

(3) Bags, sift-proof, 5H2 must be made sift-proof by appropriate means such as use of paper or a plastic film bonded to the inner surface of the bag or one or more separate inner liners made of paper or plastic material.

(4) Bags, water-resistant, 5H3: To prevent the entry of moisture, the bag must be made waterproof by appropriate means, such as separate inner liners of water-resistant paper (e.g., waxed kraft paper, double-tarred kraft paper or plastic-coated kraft paper), or plastic film bonded to the inner or outer surface of the bag, or one or more inner plastic liners.

(5) Maximum net mass: 50 kg (110 pounds).

[Amdt. 178–97, 55 FR 52717, Dec. 21, 1990, and amended by Amdt. 178–99, 58 FR 51534, Oct. 1, 1993]

§ 178.519 Standards for plastic film bags.

(a) The identification code for a plastic film bag is 5H4.

(b) Construction requirements for plastic film bags are as follows:

(1) Bags must be made of a suitable plastic material. The strength of the material used and the construction of the bag must be appropriate to the capacity and the intended use of the bag. Joints and closures must be capable of withstanding pressures and impacts liable to occur under normal conditions of transportation.

(2) Maximum net mass: 50 kg (110 pounds).

§ 178.520 Standards for textile bags.

(a) The following are identification codes for textile bags:

(1) 5L1 for an unlined or non-coated textile bag;

(2) 5L2 for a sift-proof textile bag; and

(3) 5L3 for a water-resistant textile bag.

(b) Construction requirements for textile bags are as follows:

(1) The textiles used must be of good quality. The strength of the fabric and the construction of the bag must be appropriate to the capacity and intended use of the bag.

(2) Bags, sift-proof, 5L2: The bag must be made sift-proof, by appropriate means, such as by the use of paper bonded to the inner surface of the bag by a water-resistant adhesive such as bitumen, plastic film bonded to the inner surface of the bag, or one or more inner liners made of paper or plastic material.

(3) Bags, water-resistant, 5L3: To prevent entry of moisture, the bag must be made waterproof by appropriate means, such as by the use of separate inner liners of water-resistant paper (e.g., waxed kraft paper, tarred paper, or plastic-coated kraft paper), or plastic film bonded to the inner surface of the bag, or one or more inner liners made of plastic material or metalized film or foil.

(4) Maximum net mass: 50 kg (110 pounds).

[Amdt. 178–97, 55 FR 52717, Dec. 21, 1990, as amended at 56 FR 66285, Dec. 20, 1991]

§ 178.521 Standards for paper bags.

(a) The following are identification codes for paper bags:

(1) 5M1 for a multi-wall paper bag; and

(2) 5M2 for a multi-wall water-resistant paper bag.

(b) Construction requirements for paper bags are as follows:

(1) Bags must be made of a suitable kraft paper, or of an equivalent paper with at least three plies. The strength of the paper and the construction of the bag must be appropriate to the capacity and intended use of the bag. Seams and closures must be sift-proof.

(2) Paper bags 5M2: To prevent the entry of moisture, a bag of four plies or more must be made waterproof by the use of either a water-resistant ply as one of the two outermost plies or a water-resistant barrier made of a suitable protective material between the two outermost plies. A 5M2 bag of three plies must be made waterproof by the use of a water-resistant ply as the outermost ply. When there is danger of the lading reacting with moisture, or when it is packed damp, a waterproof ply or barrier, such as double-tarred kraft paper, plastics-coated kraft paper, plastics film bonded to the inner surface of the bag, or one or more inner plastics liners, must also be placed next to the substance. Seams and closures must be waterproof.

(3) Maximum net mass: 50 kg (110 pounds).

(4) UN5M1 and UN5M2 multi wall paper bags that have paper wall basis weights that vary by not more than plus or minus 5% from the nominal basis weight reported in the initial design qualification test report.

[Amdt. 178–97, 55 FR 52717, Dec. 21, 1990, as amended at 56 FR 66285, Dec. 20, 1991; Amdt. 178–106, 59 FR 67521, Dec. 29, 1994; 79 FR 15046, Mar. 18, 2014]

§ 178.522 Standards for composite packagings with inner plastic receptacles.

(a) The following are the identification codes for composite packagings with inner plastic receptacles:

(1) 6HA1 for a plastic receptacle within a protective steel drum;

(2) 6HA2 for a plastic receptacle within a protective steel crate or box;

(3) 6HB1 for a plastic receptacle within a protective aluminum drum.

(4) 6HB2 for a plastic receptacle within a protective aluminum crate or box.

(5) 6HC for a plastic receptacle within a protective wooden box.

(6) 6HD1 for a plastic receptacle within a protective plywood drum;

(7) 6HD2 for a plastic receptacle within a protective plywood box;

(8) 6HG1 for a plastic receptacle within a protective fiber drum;

(9) 6HG2 for a plastic receptacle within a protective fiberboard box;

(10) 6HH1 for a plastic receptacle within a protective plastic drum; and

(11) 6HH2 for a plastic receptacle within a protective plastic box.

(b) Construction requirements for composite packagings with inner receptacles of plastic are as follows:

(1) Inner receptacles must be constructed under the applicable construction requirements prescribed in § 178.509(b) (1) through (7) of this subpart.

(2) The inner plastic receptacle must fit snugly inside the outer packaging, which must be free of any projections which may abrade the plastic material.

(3) Outer packagings must be constructed as follows:

(i) 6HA1 or 6HB1: Protective packaging must conform to the requirements for steel drums in § 178.504(b) of this subpart, or aluminum drums in § 178.505(b) of this subpart.

(ii) 6HA2 or 6HB2: Protective packagings with steel or aluminum crate must conform to the requirements for steel or aluminum boxes found in § 178.512(b) of this subpart.

(iii) 6HC protective packaging must conform to the requirements for wooden boxes in § 178.513(b) of this subpart.

(iv) 6HD1: Protective packaging must conform to the requirements for plywood drums, in § 178.507(b) of this subpart.

(v) 6HD2: Protective packaging must conform to the requirements of plywood boxes, in § 178.514(b) of this subpart.

(vi) 6HG1: Protective packaging must conform to the requirements for fiber drums, in § 178.508(b) of this subpart.

(vii) 6HG2: protective packaging must conform to the requirements for fiberboard boxes, in § 178.516(b) of this subpart.

(viii) 6HH1: Protective packaging must conform to the requirements for plastic drums, in § 178.509(b).

(ix) 6HH2: Protective packaging must conform to the requirements for plastic boxes, in § 178.517(b).

(4) Maximum capacity of inner receptacles is as follows: 6HA1, 6HB1, 6HD1, 6HG1, 6HH1—250 L (66 gallons); 6HA2, 6HB2, 6HC, 6HD2, 6HG2, 6HH2—60 L (16 gallons).

(5) Maximum net mass is as follows: 6HA1, 6HB1, 6HD1, 6HG1, 6HH1—400kg

(882 pounds); 6HB2, 6HC, 6HD2, 6HG2, 6HH2—75 kg (165 pounds).

[Amdt. 178–97, 55 FR 52717, Dec. 21, 1990, as amended by Amdt. 178–106, 59 FR 67521, Dec. 29, 1994]

§ 178.523 Standards for composite packagings with inner glass, porcelain, or stoneware receptacles.

(a) The following are identification codes for composite packagings with inner receptacles of glass, porcelain, or stoneware:

(1) 6PA1 for glass, porcelain, or stoneware receptacles within a protective steel drum;

(2) 6PA2 for glass, porcelain, or stoneware receptacles within a protective steel crate or box;

(3) 6PB1 for glass, porcelain, or stoneware receptacles within a protective aluminum drum;

(4) 6PB2 for glass, porcelain, or stoneware receptacles within a protective aluminum crate or box;

(5) 6PC for glass, porcelain, or stoneware receptacles within a protective wooden box;

(6) 6PD1 for glass, porcelain, or stoneware receptacles within a protective plywood drum;

(7) 6PD2 for glass, porcelain, or stoneware receptacles within a protective wickerwork hamper;

(8) 6PG1 for glass, porcelain, or stoneware receptacles within a protective fiber drum;

(9) 6PG2 for glass, porcelain, or stoneware receptacles within a protective fiberboard box;

(10) 6PH1 for glass, porcelain, or stoneware receptacles within a protective expanded plastic packaging; and

(11) 6PH2 for glass, porcelain, or stoneware receptacles within a protective solid plastic packaging.

(b) Construction requirements for composite packagings with inner receptacles of glass, porcelain, or stoneware are as follows:

(1) Inner receptacles must conform to the following requirements:

(i) Receptacles must be of suitable form (cylindrical or pear-shaped), be made of good quality materials free from any defect that could impair their strength, and be firmly secured in the outer packaging.

(ii) Any part of a closure likely to come into contact with the contents of the receptacle must be resistant to those contents. Closures must be fitted so as to be leakproof and secured to prevent any loosening during transportation. Vented closures must conform to § 173.24(f) of this subchapter.

(2) Protective packagings must conform to the following requirements:

(i) For receptacles with protective steel drum 6PA1, the drum must comply with § 178.504(b) of this subpart. However, the removable lid required for this type of packaging may be in the form of a cap.

(ii) For receptacles with protective packaging of steel crate or steel box 6PA2, the protective packaging must conform to the following:

(A) Section 178.512(b) of this subpart.

(B) In the case of cylindrical receptacles, the protective packaging must, when upright, rise above the receptacle and its closure; and

(C) If the protective crate surrounds a pear-shaped receptacle and is of matching shape, the protective packaging must be fitted with a protective cover (cap).

(iii) For receptacles with protective aluminum drum 6PB1, the requirements of § 178.505(b) of this subpart apply to the protective packaging.

(iv) For receptacles with protective aluminum box or crate 6PB2, the requirements of § 178.512(b) of this subpart apply to the protective packaging.

(v) For receptacles with protective wooden box 6PC, the requirements of § 178.513(b) of this subpart apply to the protective packaging.

(vi) For receptacles with protective plywood drum 6PD1, the requirements of § 178.507(b) of this subpart apply to the protective packaging.

(vii) For receptacles with protective wickerwork hamper 6PD2, the wickerwork hamper must be properly made with material of good quality. The hamper must be fitted with a protective cover (cap) so as to prevent damage to the receptacle.

(viii) For receptacles with protective fiber drum 6PG1, the drum must conform to the requirements of § 178.508(b) of this subpart.

(ix) For receptacles with protective fiberboard box 6PG2, the requirements

of §178.516(b) of this subpart apply to the protective packaging.

(x) For receptacles with protective solid plastic or expanded plastic packaging 6PH1 or 6PH2, the requirements of §178.517(b) of this subpart apply to the protective packaging. Solid protective plastic packaging must be manufactured from high-density polyethylene from some other comparable plastic material. The removable lid required for this type of packaging may be a cap.

(3) Quantity limitations are as follows:

(i) Maximum net capacity for packaging for liquids: 60 L (16 gallons).

(ii) Maximum net mass for packagings for solids: 75 kg (165 pounds).

Subpart M—Testing of Non-bulk Packagings and Packages

SOURCE: Amdt. 178–97, 55 FR 52723, Dec. 21, 1990, unless otherwise noted.

§178.600 Purpose and scope.

This subpart prescribes certain testing requirements for performance-oriented packagings identified in subpart L of this part.

[Amdt. 178–97, 55 FR 52717, Dec. 21, 1990, and amended by Amdt. 178–99, 58 FR 51534, Oct. 1, 1993]

§178.601 General requirements.

(a) *General*. The test procedures prescribed in this subpart are intended to ensure that packages containing hazardous materials can withstand normal conditions of transportation and are considered minimum requirements. Each packaging must be manufactured and assembled so as to be capable of successfully passing the prescribed tests and of conforming to the requirements of §173.24 of this subchapter at all times while in transportation.

(b) *Responsibility*. It is the responsibility of the packaging manufacturer to assure that each package is capable of passing the prescribed tests. To the extent that a package assembly function, including final closure, is performed by the person who offers a hazardous material for transportation, that person is responsible for performing the function in accordance with §§173.22 and 178.2 of this subchapter.

(c) *Definitions*. For the purpose of this subpart:

(1) *Design qualification testing* is the performance of the tests prescribed in §178.603, §178.604, §178.605, §178.606, §178.607, §178.608, or §178.609, as applicable, for each new or different packaging, at the start of production of that packaging.

(2) *Periodic retesting* is the performance of the drop, leakproofness, hydrostatic pressure, and stacking tests, as applicable, as prescribed in §178.603, §178.604, §178.605, or §178.606, respectively, at the frequency specified in paragraph (e) of this section. For infectious substances packagings required to meet the requirements of §178.609, periodic retesting is the performance of the tests specified in §178.609 at the frequency specified in paragraph (e) of this section.

(3) *Production testing* is the performance of the leakproofness test prescribed in §178.604 of this subpart on each single or composite packaging intended to contain a liquid.

(4) *A different packaging* is one that differs (i.e. is not identical) from a previously produced packaging in structural design, size, material of construction, wall thickness or manner of construction but does not include:

(i) A packaging which differs only in surface treatment;

(ii) A combination packaging which differs only in that the outer packaging has been successfully tested with different inner packagings. A variety of such inner packagings may be assembled in this outer packaging without further testing;

(iii) A plastic packaging which differs only with regard to additives which conform to §178.509(b)(3) or §178.517(b)(4) or (5) of this part;

(iv) A combination packaging with inner packagings conforming to the provisions of paragraph (g) of this section;

(v) Packagings which differ from the design type only in their lesser design height; or

(vi) For a steel drum, variations in design elements which do not constitute a different design type under

the provisions of paragraph (g)(8) of this section.

(d) *Design qualification testing*. The packaging manufacturer shall achieve successful test results for the design qualification testing at the start of production of each new or different packaging.

(e) *Periodic retesting*. The packaging manufacturer must achieve successful test results for the periodic retesting at intervals established by the manufacturer of sufficient frequency to ensure that each packaging produced by the manufacturer is capable of passing the design qualification tests. Changes in retest frequency are subject to the approval of the Associate Administrator for Hazardous Materials Safety. For single or composite packagings, the periodic retests must be conducted at least once every 12 months. For combination packagings, the periodic retests must be conducted at least once every 24 months. For infectious substances packagings, the periodic retests must be conducted at least once every 24 months.

(f) *Test samples*. The manufacturer shall conduct the design qualification and periodic tests prescribed in this subpart using random samples of packagings, in the numbers specified in the appropriate test section. In addition, the leakproofness test, when required, shall be performed on each packaging produced by the manufacturer, and each packaging prior to reuse under §173.28 of this subchapter, by the reconditioner.

(g) *Selective testing*. The selective testing of packagings that differ only in minor respects from a tested type is permitted as described in this section. For air transport, packagings must comply with §173.27(c)(1) and (c)(2) of this subchapter.

(1) *Selective testing of combination packagings. Variation 1*. Variations are permitted in inner packagings of a tested combination package, without further testing of the package, provided an equivalent level of performance is maintained and, when a package is altered under Variation 1 after October 1, 2010, the methodology used to determine that the inner packaging, including closure, maintains an equivalent level of performance is documented in writing by the person certifying compliance with this paragraph and retained in accordance with paragraph (l) of this section. Permitted variations are as follows:

(i) Inner packagings of equivalent or smaller size may be used provided—

(A) The inner packagings are of similar design to the tested inner packagings (i.e. shape—round, rectangular, etc.);

(B) The material of construction of the inner packagings (glass, plastic, metal, etc.) offers resistance to impact and stacking forces equal to or greater than that of the originally tested inner packaging;

(C) The inner packagings have the same or smaller openings and the closure is of similar design (e.g., screw cap, friction lid, etc.);

(D) Sufficient additional cushioning material is used to take up void spaces and to prevent significant moving of the inner packagings;

(E) Inner packagings are oriented within the outer packaging in the same manner as in the tested package; and,

(F) The gross mass of the package does not exceed that originally tested.

(ii) A lesser number of the tested inner packagings, or of the alternative types of inner packagings identified in paragraph (g)(1)(i) of this section, may be used provided sufficient cushioning is added to fill void space(s) and to prevent significant moving of the inner packagings.

(2) *Selective testing of combination packagings. Variation 2*. Articles or inner packagings of any type, for solids or liquids, may be assembled and transported without testing in an outer packaging under the following conditions:

(i) The outer packaging must have been successfully tested in accordance with §178.603 with fragile (e.g. glass) inner packagings containing liquids at the Packing Group I drop height;

(ii) The total combined gross mass of inner packagings may not exceed one-half the gross mass of inner packagings used for the drop test;

(iii) The thickness of cushioning material between inner packagings and

between inner packagings and the outside of the packaging may not be reduced below the corresponding thickness in the originally tested packaging; and when a single inner packaging was used in the original test, the thickness of cushioning between inner packagings may not be less than the thickness of cushioning between the outside of the packaging and the inner packaging in the original test. When either fewer or smaller inner packagings are used (as compared to the inner packagings used in the drop test), sufficient additional cushioning material must be used to take up void spaces.

(iv) The outer packaging must have successfully passed the stacking test set forth in § 178.606 of this subpart when empty, i.e., without either inner packagings or cushioning materials. The total mass of identical packages must be based on the combined mass of inner packagings used for the drop test;

(v) Inner packagings containing liquids must be completely surrounded with a sufficient quantity of absorbent material to absorb the entire liquid contents of the inner packagings;

(vi) When the outer packaging is intended to contain inner packagings for liquids and is not leakproof, or is intended to contain inner packagings for solids and is not siftproof, a means of containing any liquid or solid contents in the event of leakage must be provided in the form of a leakproof liner, plastic bag, or other equally efficient means of containment. For packagings containing liquids, the absorbent material required in paragraph (g)(2)(v) of this section must be placed inside the means of containing liquid contents; and

(vii) Packagings must be marked in accordance with § 178.503 of this part as having been tested to Packing Group I performance for combination packagings. The marked maximum gross mass may not exceed the sum of the mass of the outer packaging plus one half the mass of the filled inner packagings of the tested combination packaging. In addition, the marking required by § 178.503(a)(2) of this part must include the letter ''V''.

(3) *Variation 3.* Packagings other than combination packagings which are produced with reductions in external dimensions (i.e., length, width or diameter) of up to 25 percent of the dimensions of a tested packaging may be used without further testing provided an equivalent level of performance is maintained. The packagings must, in all other respects (including wall thicknesses), be identical to the tested design-type. The marked gross mass (when required) must be reduced in proportion to the reduction in volume.

(4) *Variation 4.* Variations are permitted in outer packagings of a tested design-type combination packaging, without further testing, provided an equivalent level of performance is maintained, as follows:

(i) Each external dimension (length, width and height) is less than or equal to the corresponding dimension of the tested design-type;

(ii) The structural design of the tested outer packaging (i.e. methods of construction, materials of construction, strength characteristics of materials of construction, method of closure and material thicknesses) is maintained;

(iii) The inner packagings are identical to the inner packagings used in the tested design type except that their size and mass may be less; and they are oriented within the outer packaging in the same manner as in the tested packaging;

(iv) The same type or design of absorbent materials, cushioning materials and any other components necessary to contain and protect inner packagings, as used in the tested design type, are maintained. The thickness of cushioning material between inner packagings and between inner packagings and the outside of the packaging may not be less than the thicknesses in the tested design type packaging; and

(v) Sufficient additional cushioning material is used to take up void spaces and to prevent significant moving of the inner packagings.

An outer packaging qualifying for use in transport in accordance with all of the above conditions may also be used without testing to transport inner packagings substituted for the originally tested inner packagings in accordance with the conditions set out in

Variation 1 in paragraph (g)(1) of this section.

(5) *Variation 5.* Single packagings (i.e., non-bulk packagings other than combination packagings), that differ from a tested design type only to the extent that the closure device or gasketing differs from that used in the originally tested design type, may be used without further testing, provided an equivalent level of performance is maintained, subject to the following conditions (the qualifying tests):

(i) A packaging with the replacement closure devices or gasketing must successfully pass the drop test specified in §178.603 in the orientation which most severely tests the integrity of the closure or gasket;

(ii) When intended to contain liquids, a packaging with the replacement closure devices or gasketing must successfully pass the leakproofness test specified in §178.604, the hydrostatic pressure test specified in §178.605, and the stacking test specified in §178.606.

Replacement closures and gasketings qualified under the above test requirements are authorized without additional testing for packagings described in paragraph (g)(3) of this section. Replacement closures and gasketings qualified under the above test requirements also are authorized without additional testing for different tested design types packagings of the same type as the originally tested packaging, provided the original design type tests are more severe or comparable to tests which would otherwise be conducted on the packaging with the replacement closures or gasketings. (For example: The packaging used in the qualifying tests has a lesser packaging wall thickness than the packaging with replacement closure devices or gasketing; the gross mass of the packaging used in the qualifying drop test equals or exceeds the mass for which the packaging with replacement closure devices or gasketing was tested; the packaging used in the qualifying drop test was dropped from the same or greater height than the height from which the packaging with replacement closure devices or gasketing was dropped in design type tests; and the specific gravity of the substance used in the qualifying drop test was the same or greater than the specific gravity of the liquid used in the design type tests of the packaging with replacement closure devices or gasketing.)

(6) The provisions in Variations 1, 2, and 4 in paragraphs (g)(1), (2) and (4) of this section for combination packagings may be applied to packagings containing articles, where the provisions for inner packagings are applied analogously to the articles. In this case, inner packagings need not comply with §173.27(c)(1) and (c)(2) of this subchapter.

(7) *Approval of selective testing.* In addition to the provisions of §178.601(g)(1) through (g)(6) of this subpart, the Associate Administrator may approve the selective testing of packagings that differ only in minor respects from a tested type.

(8) For a steel drum with a capacity greater than 12 L (3 gallons) manufactured from low carbon, cold-rolled sheet steel meeting ASTM designations A 366/A 366M or A 568/A 568M, variations in elements other than the following design elements are considered minor and do not constitute a different drum design type, or ''different packaging'' as defined in paragraph (c) of this section for which design qualification testing and periodic retesting are required. Minor variations authorized without further testing include changes in the identity of the supplier of component material made to the same specifications, or the original manufacturer of a DOT specification or UN standard drum to be remanufactured. A change in any one or more of the following design elements constitutes a different drum design type:

(i) The packaging type and category of the original drum and the remanufactured drum, *i.e.*, 1A1 or 1A2;

(ii) The style, (*i.e.*, straight-sided or tapered);

(iii) Except as provided in paragraph (g)(3) of this section, the rated (marked) capacity and outside dimensions;

(iv) The physical state for which the packaging was originally approved (*e.g.*, tested for solids or liquids);

(v) An increase in the marked level of performance of the original drum (*i.e.*, to a higher packing group, hydrostatic

test pressure, or specific gravity to which the packaging has been tested);

(vi) Type of side seam welding;

(vii) Type of steel;

(viii) An increase greater than 10% or any decrease in the steel thickness of the head, body, or bottom;

(ix) End seam type, (*e.g.*, triple or double seam);

(x) A reduction in the number of rolling hoops (beads) which equal or exceed the diameter over the chimes;

(xi) The location, type or size, and material of closures (other than the cover of UN 1A2 drums);

(xii) The location (*e.g.*, from the head to the body), type (e.g., mechanically seamed or welded flange), and materials of closure (other than the cover of UN 1A2 drums); and

(xiii) For UN 1A2 drums:

(A) Gasket material (e.g., plastic), or properties affecting the performance of the gasket;

(B) Configuration or dimensions of the gasket;

(C) Closure ring style including bolt size (e.g., square or round back, 0.625 inches bolt); and

(D) Closure ring thickness,

(E) Width of lugs or extensions in crimp/lug cover.

(h) *Approval of equivalent packagings.* A packaging having specifications different from those in §§ 178.504–178.523 of this part, or which is tested using methods or test intervals, other than those specified in subpart M of this part, may be used if approved by the Associate Administrator. Such packagings must be shown to be equally effective, and testing methods used must be equivalent.

(i) *Proof of compliance.* Notwithstanding the periodic retest intervals specified in paragraph (e) of this section, the Associate Administrator may at any time require demonstration of compliance by a manufacturer, through testing in accordance with this subpart, that packagings meet the requirements of this subpart. As required by the Associate Administrator, the manufacturer shall either—

(1) Conduct performance tests, or have tests conducted by an independent testing facility, in accordance with this subpart; or

(2) Supply packagings, in quantities sufficient to conduct tests in accordance with this subpart, to the Associate Administrator or a designated representative of the Associate Administrator.

(j) *Coatings.* If an inner treatment or coating of a packaging is required for safety reasons, the manufacturer shall design the packaging so that the treatment or coating retains its protective properties even after withstanding the tests prescribed by this subpart.

(k) *Number of test samples.* Except as provided in this section, one test sample must be used for each test performed under this subpart.

(1) *Stainless steel drums.* Provided the validity of the test results is not affected, a person may perform the design qualification testing of stainless steel drums using three (3) samples rather than the specified eighteen (18) samples under the following provisions:

(i) The packaging must be tested in accordance with this subpart by subjecting each of the three containers to the following sequence of tests:

(A) The stacking test in § 178.606,

(B) The leakproofness test in § 178.604,

(C) The hydrostatic pressure test in § 178.608, and

(D) Diagonal top chime and flat on the side drop tests in § 178.603. Both drop tests may be conducted on the same sample.

(ii) For periodic retesting of stainless steel drums, a reduced sample size of one container is authorized.

(2) *Packagings other than stainless steel drums.* Provided the validity of the test results is not affected, several tests may be performed on one sample with the approval of the Associate Administrator.

(l) *Record retention.* Following each design qualification test and each periodic retest on a packaging, a test report must be prepared.

(1) The test report must be maintained at each location where the packaging is manufactured, certified, and a design qualification test or periodic retest is conducted as follows:

Responsible party	Duration
Person manufacturing the packaging	As long as manufactured and two years thereafter.
Person performing design testing	Design test maintained for a single or composite packaging for six years after the test is successfully performed and for a combination packaging or packaging intended for infectious substances for seven years after the test is successfully performed.
Person performing periodic retesting	Performance test maintained for a single or composite packaging for one year after the test is successfully performed and for a combination packaging or packaging intended for infectious substances for two years after the test is successfully performed.

(2) The test report must be made available to a user of a packaging or a representative of the Department upon request. The test report, at a minimum, must contain the following information:

(i) Name and address of test facility;

(ii) Name and address of applicant (where appropriate);

(iii) A unique test report identification;

(iv) Date of the test report;

(v) Manufacturer of the packaging;

(vi) Description of the packaging design type (e.g., dimensions, materials, closures, thickness, *etc.*), including methods of manufacture (e.g., blow molding) and which may include drawing(s) and/or photograph(s);

(vii) Maximum capacity;

(viii) Characteristics of test contents, e.g., viscosity and relative density for liquids and particle size for solids;

(ix) Test descriptions and results; and

(x) Signed with the name and title of signatory.

[Amdt. 178–97, 55 FR 52723, Dec. 21, 1990, as amended at 56 FR 66285, Dec. 20, 1991; 57 FR 45465, Oct. 1, 1992; Amdt. 178–102, 59 FR 28494, June 2, 1994; Amdt. 178–106, 59 FR 67521, 67522, Dec. 29, 1994; Amdt. 178–117, 61 FR 50628, Sept. 26, 1996; 66 FR 45386, Aug. 28, 2001; 67 FR 53143, Aug. 14, 2002; 68 FR 75758, Dec. 31, 2003; 68 FR 61942, Oct. 30, 2003; 75 FR 5396, Feb. 2, 2010; 75 FR 60339, Sept. 30, 2010; 77 FR 60944, Oct. 5, 2012; 78 FR 1118, Jan. 7, 2013; 78 FR 14715, Mar. 7, 2013; 78 FR 65487, Oct. 31, 2013]

§ 178.602 Preparation of packagings and packages for testing.

(a) Except as otherwise provided in this subchapter, each packaging and package must be closed in preparation for testing and tests must be carried out in the same manner as if prepared for transportation, including inner packagings in the case of combination packagings.

(b) For the drop and stacking test, inner and single-unit receptacles other than bags must be filled to not less than 95% of maximum capacity (see § 171.8 of this subchapter) in the case of solids and not less than 98% of maximum in the case of liquids. Bags containing solids shall be filled to the maximum mass at which they may be used. The material to be transported in the packagings may be replaced by a non-hazardous material, except for chemical compatibility testing or where this would invalidate the results of the tests.

(c) If the material to be transported is replaced for test purposes by a non-hazardous material, the material used must be of the same or higher specific gravity as the material to be carried, and its other physical properties (grain, size, viscosity) which might influence the results of the required tests must correspond as closely as possible to those of the hazardous material to be transported. Water may also be used for the liquid drop test under the conditions specified in § 178.603(e) of this subpart. It is permissible to use additives, such as bags of lead shot, to achieve the requisite total package mass, so long as they are placed so that the test results are not affected.

(d) Paper or fiberboard packagings must be conditioned for at least 24 hours immediately prior to testing in an atmosphere maintained—

(1) At 50 percent ±2 percent relative humidity, and at a temperature of 23 °C±2 °C (73 °F±4 °F). Average values should fall within these limits. Short-term fluctuations and measurement limitations may cause individual measurements to vary by up to ±5 percent

relative humidity without significant impairment of test reproducibility;

(2) At 65 percent ±2 percent relative humidity, and at a temperature of 20 °C±2 °C (68 °F±4 °F), or 27 °C±2 °C (81 °F±4 °F). Average values should fall within these limits. Short-term fluctuations and measurement limitations may cause individual measurements to vary by up to ±5 percent relative humidity without significant impairment of test reproducibility; or

(3) For testing at periodic intervals only (i.e., other than initial design qualification testing), at ambient conditions.

(e) Except as otherwise provided, each packaging must be closed in preparation for testing in the same manner as if prepared for actual shipment. All closures must be installed using proper techniques and torques.

(f) Bung-type barrels made of natural wood must be left filled with water for at least 24 hours before the tests.

[Amdt. 178–97, 55 FR 52723, Dec. 21, 1990, as amended at 56 FR 66286, Dec. 20, 1991; Amdt. 178–106, 59 FR 67522, Dec. 29, 1994; 69 FR 76186, Dec. 20, 2004; 71 FR 78635, Dec. 29, 2006]

§ 178.603 Drop test.

(a) *General*. The drop test must be conducted for the qualification of all packaging design types and performed periodically as specified in § 178.601(e). For other than flat drops, the center of gravity of the test packaging must be vertically over the point of impact. Where more than one orientation is possible for a given drop test, the orientation most likely to result in failure of the packaging must be used. The number of drops required and the packages' orientations are as follows:

Packaging	No. of tests (samples)	Drop orientation of samples
Steel drums, Aluminum drums, Metal drums (other than steel or aluminum), Steel Jerricans, Plywood drums, Wooden barrels, Fiber drums, Plastic drums and Jerricans, Composite packagings which are in the shape of a drum.	Six—(three for each drop).	First drop (using three samples): The package must strike the target diagonally on the chime or, if the packaging has no chime, on a circumferential seam or an edge. Second drop (using the other three samples): The package must strike the target on the weakest part not tested by the first drop, for example a closure or, for some 7 cylindrical drums, the welded longitudinal seam of the drum body.
Boxes of natural wood, Plywood boxes, Reconstituted wood boxes, Fiberboard boxes, Plastic boxes, Steel, aluminum or other metal boxes, Composite packagings that are in the shape of a box.	Five—(one for each drop).	First drop: Flat on the bottom (using the first sample). Second drop: Flat on the top (using the second sample). Third drop: Flat on the long side (using the third sample). Fourth drop: Flat on the short side (using the fourth sample). Fifth drop: On a corner (using the fifth sample).
Bags—single-ply with a side seam	Three—(three drops per bag).	First drop: Flat on a wide face (using all three samples). Second drop: Flat on a narrow face (using all three samples). Third drop: On an end of the bag (using all three samples).
Bags—single-ply without a side seam, or multi-ply.	Three—(two drops per bag).	First drop: Flat on a wide face (using all three samples). Second drop: On an end of the bag (using all three samples).

(b) *Exceptions*. For testing of single or composite packagings constructed of stainless steel, nickel, or monel at periodic intervals only (i.e., other than design qualification testing), the drop test may be conducted with two samples, one sample each for the two drop orientations. These samples may have been previously used for the hydrostatic pressure or stacking test. Exceptions for the number of steel, aluminum and other metal packaging samples used for conducting the drop test are subject to the approval of the Associate Administrator.

(c) *Special preparation of test samples for the drop test*. (1) Testing of plastic drums, plastic jerricans, plastic boxes other than expanded polystyrene boxes, composite packagings (plastic material), and combination packagings with plastic inner packagings other than plastic bags intended to contain solids or articles must be carried out when the temperature of the test sample and its contents has been reduced to −18 °C (0 °F) or lower. Test liquids must be kept in the liquid state, if necessary, by the addition of anti-freeze. Water/anti-freeze solutions with a minimum specific gravity of 0.95 for testing at −18 °C (0 °F) or lower are considered acceptable test liquids. Test samples prepared in this way are not required to be conditioned in accordance with § 178.602(d).

(d) *Target*. The target must be a rigid, non-resilient, flat and horizontal surface.

(e) *Drop height*. Drop heights, measured as the vertical distance from the target to the lowest point on the package, must be equal to or greater than the drop height determined as follows:

(1) For solids and liquids, if the test is performed with the solid or liquid to be transported or with a non-hazardous material having essentially the same physical characteristic, the drop height must be determined according to packing group, as follows:

(i) Packing Group I: 1.8 m (5.9 feet).

(ii) Packing Group II: 1.2 m (3.9 feet).

(iii) Packing Group III: 0.8 m (2.6 feet).

(2) For liquids in single packagings and for inner packagings of combination packagings, if the test is performed with water:

(i) Where the materials to be carried have a specific gravity not exceeding 1.2, drop height must be determined according to packing group, as follows:

(A) Packing Group I: 1.8 m (5.9 feet).

(B) Packing Group II: 1.2 m (3.9 feet).

(C) Packing Group III: 0.8 m (2.6 feet).

(ii) Where the materials to be transported have a specific gravity exceeding 1.2, the drop height must be calculated on the basis of the specific gravity (SG) of the material to be carried, rounded up to the first decimal, as follows:

(A) Packing Group I: SG × 1.5 m (4.9 feet).

(B) Packing Group II: SG × 1.0 m (3.3 feet).

(C) Packing Group III: SG × 0.67 m (2.2 feet).

(f) *Criteria for passing the test*. A package is considered to successfully pass the drop tests if for each sample tested—

(1) For packagings containing liquid, each packaging does not leak when equilibrium has been reached between the internal and external pressures, except for inner packagings of combination packagings when it is not necessary that the pressures be equalized;

(2) For removable head drums for solids, the entire contents are retained by an inner packaging (e.g., a plastic bag) even if the closure on the top head of the drum is no longer sift-proof;

(3) For a bag, neither the outermost ply nor an outer packaging exhibits any damage likely to adversely affect safety during transport;

(4) The packaging or outer packaging of a composite or combination packaging must not exhibit any damage likely to affect safety during transport. Inner receptacles, inner packagings, or articles must remain completely within the outer packaging and there must be no leakage of the filling substance from the inner receptacles or inner packagings;

(5) Any discharge from a closure is slight and ceases immediately after impact with no further leakage; and

(6) No rupture is permitted in packagings for materials in Class 1 which would permit spillage of loose explosive substances or articles from the outer packaging.

[Amdt. 178–97, 55 FR 52723, Dec. 21, 1990, as amended at 56 FR 66286, Dec. 20, 1991; 57 FR 45465, Oct. 1, 1992; Amdt. 178–99, 58 FR 51534, Oct. 1, 1993; Amdt. 178–106, 59 FR 67522, Dec. 29, 1994; 65 FR 50462, Aug. 18, 2000; 66 FR 45386, Aug. 28, 2001; 67 FR 61016, Sept. 27, 2002; 69 FR 76186, Dec. 20, 2004; 76 FR 3389, Jan. 19, 2011; 78 FR 1097, Jan. 7, 2013]

§ 178.604 Leakproofness test.

(a) *General*. The leakproofness test must be performed with compressed air or other suitable gases on all packagings intended to contain liquids, except that:

(1) The inner receptacle of a composite packaging may be tested without the outer packaging provided the test results are not affected; and

(2) This test is not required for inner packagings of combination packagings.

(b) *Number of packagings to be tested*—(1) *Production testing*. All packagings subject to the provisions of this section must be tested and must pass the leakproofness test:

(i) Before they are first used in transportation; and

(ii) Prior to reuse, when authorized for reuse by § 173.28 of this subchapter.

(2) *Design qualification and periodic testing*. Three samples of each different packaging must be tested and must pass the leakproofness test. Exceptions for the number of samples used in conducting the leakproofness test are subject to the approval of the Associate Administrator.

(c) *Special preparation*—(1) For design qualification and periodic testing, packagings must be tested with closures in place. For production testing, packagings need not have their closures in place. Removable heads need not be installed during production testing.

(2) For testing with closures in place, vented closures must either be replaced by similar non-vented closures or the vent must be sealed.

(d) *Test method*. The packaging must be restrained under water while an internal air pressure is applied; the method of restraint must not affect the results of the test. The test must be conducted, for other than production testing, for a minimum time of five minutes. Other methods, at least equally effective, may be used in accordance with appendix B of this part.

(e) *Pressure applied*. An internal air pressure (gauge) must be applied to the packaging as indicated for the following packing groups:

(1) Packing Group I: Not less than 30 kPa (4 psi).

(2) Packing Group II: Not less than 20 kPa (3 psi).

(3) Packing Group III: Not less than 20 kPa (3 psi).

(f) *Criteria for passing the test*. A packaging passes the test if there is no leakage of air from the packaging.

[Amdt. 178–97, 55 FR 52723, Dec. 21, 1990, as amended at 56 FR 66286, Dec. 20, 1991; Amdt. 178–106, 59 FR 67522, Dec. 29, 1994; 66 FR 45386, Aug. 28, 2001]

§ 178.605 Hydrostatic pressure test.

(a) *General*. The hydrostatic pressure test must be conducted for the qualification of all metal, plastic, and composite packaging design types intended to contain liquids and be performed periodically as specified in § 178.601(e). This test is not required for inner packagings of combination packagings. For internal pressure requirements for inner packagings of combination packagings intended for transportation by aircraft, see § 173.27(c) of this subchapter.

(b) *Number of test samples*. Three test samples are required for each different packaging. For packagings constructed of stainless steel, monel, or nickel, only one sample is required for periodic retesting of packagings. Exceptions for the number of aluminum and steel sample packagings used in conducting the hydrostatic pressure test are subject to the approval of the Associate Administrator.

(c) *Special preparation of receptacles for testings*. Vented closures must either be replaced by similar non-vented closures or the vent must be sealed.

(d) *Test method and pressure to be applied*. Metal packagings and composite packagings other than plastic (e.g., glass, porcelain or stoneware), including their closures, must be subjected to the test pressure for 5 minutes. Plastic packagings and composite packagings (plastic material), including their closures, must be subjected to the test pressure for 30 minutes. This pressure is the one to be marked as required in § 178.503(a)(5). The receptacles must be supported in a manner that does not invalidate the test. The test pressure must be applied continuously and evenly, and it must be kept constant throughout the test period. In addition, packagings intended to contain hazardous materials of Packing Group I must be tested to a minimum test pressure of 250 kPa (36 psig). The hydraulic pressure (gauge) applied, taken at the top of the receptacle, and determined by any one of the following methods must be:

(1) Not less than the total gauge pressure measured in the packaging (i.e., the vapor pressure of the filling material and the partial pressure of the air or other inert gas minus 100 kPa (15 psi)) at 55 °C (131 °F), multiplied by a safety factor of 1.5. This total gauge pressure must be determined on the basis of a maximum degree of filling in accordance with § 173.24a(d) of this subchapter and a filling temperature of 15 °C (59 °F);

(2) Not less than 1.75 times the vapor pressure at 50 °C (122 °F) of the material to be transported minus 100 kPa (15 psi), but with a minimum test pressure of 100 kPa (15 psig); or

(3) Not less than 1.5 times the vapor pressure at 55 °C (131 °F) of the material to be transported minus 100 kPa (15 psi), but with a minimum test pressure of 100 kPa (15 psig).

Packagings intended to contain hazardous materials of Packing Group I

must be tested to a minimum test pressure of 250 kPa (36 psig).

(e) *Criteria for passing the test.* A package passes the hydrostatic test if, for each test sample, there is no leakage of liquid from the package.

[Amdt. 178–97, 55 FR 52723, Dec. 21, 1990, as amended at 56 FR 66286, Dec. 20, 1991; Amdt. 178–99, 58 FR 51534, Oct. 1, 1993; Amdt. 178–102, 59 FR 28494, June 2, 1994; 65 FR 50462, Aug. 18, 2000; 66 FR 45386, 45390, Aug. 28, 2001; 73 FR 57007, Oct. 1, 2008; 78 FR 60755, Oct. 2, 2013]

§ 178.606 Stacking test.

(a) *General.* All packaging design types other than bags must be subjected to a stacking test.

(b) *Number of test samples.* Three test samples are required for each different packaging. For periodic retesting of packagings constructed of stainless steel, monel, or nickel, only one test sample is required. Exceptions for the number of aluminum and steel sample packagings used in conducting the stacking test are subject to the approval of the Associate Administrator. Notwithstanding the provisions of § 178.602(a) of this subpart, combination packagings may be subjected to the stacking test without their inner packagings, except where this would invalidate the results of the test.

(c) *Test method*—(1) *Design qualification testing.* The test sample must be subjected to a force applied to the top surface of the test sample equivalent to the total weight of identical packages which might be stacked on it during transport; where the contents of the test sample are non-hazardous liquids with specific gravities different from that of the liquid to be transported, the force must be calculated based on the specific gravity that will be marked on the packaging. The minimum height of the stack, including the test sample, must be 3.0 m (10 feet). The duration of the test must be 24 hours, except that plastic drums, jerricans, and composite packagings 6HH intended for liquids shall be subjected to the stacking test for a period of 28 days at a temperature of not less than 40 °C (104 °F). Alternative test methods which yield equivalent results may be used if approved by the Associate Administrator. In guided load tests, stacking stability must be assessed after completion of the test by placing two filled packagings of the same type on the test sample. The stacked packages must maintain their position for one hour. Plastic packagings must be cooled to ambient temperature before this stacking stability assessment.

(2) *Periodic retesting.* The test sample must be tested in accordance with:

(i) Section 178.606(c)(1) of this subpart; or

(ii) The packaging may be tested using a dynamic compression testing machine. The test must be conducted at room temperature on an empty, unsealed packaging. The test sample must be centered on the bottom platen of the testing machine. The top platen must be lowered until it comes in contact with the test sample. Compression must be applied end to end. The speed of the compression tester must be one-half inch plus or minus one-fourth inch per minute. An initial preload of 50 pounds must be applied to ensure a definite contact between the test sample and the platens. The distance between the platens at this time must be recorded as zero deformation. The force A to then be applied must be calculated using the formula:

Liquids: $A = (n-1)\ [w + (s \times v \times 8.3 \times .98)] \times 1.5$;

Solids: $A = (n-1)\ (m \times 2.2 \times 1.5)$

Where:

A = applied load in pounds

m = the certified maximum gross mass for the container in kilograms.

n = minimum number of containers that, when stacked, reach a height of 3 meters.

s = specific gravity of lading.

w = maximum weight of one empty container in pounds.

v = actual capacity of container (rated capacity + outage) in gallons.

And:

8.3 corresponds to the weight in pounds of 1.0 gallon of water.

.98 corresponds to the minimum filling percentage of the maximum capacity for liquids.

1.5 is a compensation factor that converts the static load of the stacking test into a load suitable for dynamic compression testing.

2.2 is the conversion factor for kilograms to pounds.

(d) *Criteria for passing the test.* No test sample may leak. In composite packagings or combination packagings,

there must be no leakage of the filling substance from the inner receptacle, or inner packaging. No test sample may show any deterioration which could adversely affect transportation safety or any distortion likely to reduce its strength, cause instability in stacks of packages, or cause damage to inner packagings likely to reduce safety in transportation. For the dynamic compression test, a container passes the test if, after application of the required load, there is no buckling of the sidewalls sufficient to cause damage to its expected contents; in no case may the maximum deflection exceed one inch.

[Amdt. 178–97, 55 FR 52723, Dec. 21, 1990, as amended at 56 FR 66286, Dec. 20, 1991; 57 FR 45465, Oct. 1, 1992; Amdt. 178–102, 59 FR 28494, June 2, 1994; Amdt. 178–106, 59 FR 67522, Dec. 29, 1994; 65 FR 58632, Sept. 29, 2000; 66 FR 45386, Aug. 28, 2001; 70 FR 34076, June 13, 2005; 72 FR 55696, Oct. 1, 2007]

§ 178.607 Cooperage test for bung-type wooden barrels.

(a) *Number of samples*. One barrel is required for each different packaging.

(b) *Method of testing*. Remove all hoops above the bilge of an empty barrel at least two days old.

(c) *Criteria for passing the test*. A packaging passes the cooperage test only if the diameter of the cross-section of the upper part of the barrel does not increase by more than 10 percent.

§ 178.608 Vibration standard.

(a) Each packaging must be capable of withstanding, without rupture or leakage, the vibration test procedure outlined in this section.

(b) Test method. (1) Three sample packagings, selected at random, must be filled and closed as for shipment.

(2) The three samples must be placed on a vibrating platform that has a vertical or rotary double-amplitude (peak-to-peak displacement) of one inch. The packages should be constrained horizontally to prevent them from falling off the platform, but must be left free to move vertically, bounce and rotate.

(3) The test must be performed for one hour at a frequency that causes the package to be raised from the vibrating platform to such a degree that a piece of material of approximately 1.6 mm (0.063 inch) thickness (such as steel strapping or paperboard) can be passed between the bottom of any package and the platform.

(4) Immediately following the period of vibration, each package must be removed from the platform, turned on its side and observed for any evidence of leakage.

(5) Other methods, at least equally effective, may be used, if approved by the Associate Administrator.

(c) *Criteria for passing the test*. A packaging passes the vibration test if there is no rupture or leakage from any of the packages. No test sample should show any deterioration which could adversely affect transportation safety or any distortion liable to reduce packaging strength.

[Amdt. 178–97, 55 FR 52723, Dec. 21, 1990, as amended at 56 FR 66286, Dec. 20, 1991; 66 FR 45386, Aug. 28, 2001]

§ 178.609 Test requirements for packagings for infectious substances.

(a) Samples of each packaging must be prepared for testing as described in paragraph (b) of this section and then subjected to the tests in paragraphs (d) through (i) of this section.

(b) Samples of each packaging must be prepared as for transport except that a liquid or solid infectious substance should be replaced by water or, where conditioning at −18 °C (0 °F) is specified, by water/antifreeze. Each primary receptacle must be filled to 98 percent capacity. Packagings for live animals should be tested with the live animal being replaced by an appropriate dummy of similar mass.

(c) Packagings prepared as for transport must be subjected to the tests in Table I of this paragraph (c), which, for test purposes, categorizes packagings according to their material characteristics. For outer packagings, the headings in Table I relate to fiberboard or similar materials whose performance may be rapidly affected by moisture; plastics that may embrittle at low temperature; and other materials, such as metal, for which performance is not significantly affected by moisture or temperature. Where a primary receptacle and a secondary packaging of an inner packaging are made of different materials, the material of the primary

receptacle determines the appropriate test. In instances where a primary receptacle is made of more than one material, the material most likely to be damaged determines the appropriate test.

TABLE I—TESTS REQUIRED

Material of					Tests required				
Outer packaging			Inner packaging		Refer to para. (d)				Refer to para. (h)
Fiberboard	Plastics	Other	Plastics	Other	(d)	(e)	(f)	(g)	
X			X			X	X	When dry ice is used	X
X				X		X			X
	X		X				X		X
	X			X			X		X
		X	X				X		X
		X		X	X				X

(d) Samples must be subjected to free-fall drops onto a rigid, nonresilient, flat, horizontal surface from a height of 9 m (30 feet).

The drops must be performed as follows:

(1) Where the samples are in the shape of a box, five samples must be dropped, one in each of the following orientation:

(i) Flat on the base;

(ii) Flat on the top;

(iii) Flat on the longest side;

(iv) Flat on the shortest side; and

(v) On a corner.

(2) Where the samples are in the shape of a drum, three samples must be dropped, one in each of the following orientations:

(i) Diagonally on the top chime, with the center of gravity directly above the point of impact;

(ii) Diagonally on the base chime; and

(iii) Flat on the side.

(3) While the sample should be released in the required orientation, it is accepted that for aerodynamic reasons the impact may not take place in that orientation.

(4) Following the appropriate drop sequence, there must be no leakage from the primary receptacle(s) which should remain protected by absorbent material in the secondary packaging.

(e) The samples must be subjected to a water spray to simulate exposure to rainfall of approximately 50 mm (2 inches) per hour for at least one hour. They must then be subjected to the test described in paragraph (d) of this section.

(f) The sample must be conditioned in an atmosphere of −18 °C (0 °F) or less for a period of at least 24 hours and within 15 minutes of removal from that atmosphere be subjected to the test described in paragraph (d) of this section. Where the sample contains dry ice, the conditioning period may be reduced to 4 hours.

(g) Where packaging is intended to contain dry ice, a test additional to that specified in paragraph (d) or (e) or (f) of this section must be carried out. One sample must be stored so that all the dry ice dissipates and then be subjected to the test described in paragraph (d) of this section.

(h) Packagings with a gross mass of 7 kg (15 pounds) or less should be subjected to the tests described in paragraph (h)(1) of this section and packagings with a gross mass exceeding 7 kg (15 pounds) to the tests in paragraph (h)(2) of this section.

(1) Samples must be placed on a level, hard surface. A cylindrical steel rod with a mass of at least 7 kg (15 pounds), a diameter not exceeding 38 mm (1.5 inches), and, at the impact end edges, a radius not exceeding 6 mm (0.2 inches), must be dropped in a vertical free fall from a height of 1 m (3 feet), measured from the impact end of the sample's impact surface. One sample must be placed on its base. A second sample must be placed in an orientation perpendicular to that used for the first. In each instance, the steel rod must be aimed to impact the primary receptacle(s). For a successful test,

there must be no leakage from the primary receptacle(s) following each impact.

(2) Samples must be dropped onto the end of a cylindrical steel rod. The rod must be set vertically in a level, hard surface. It must have a diameter of 38 mm (1.5 inches) and a radius not exceeding 6 mm (0.2 inches) at the edges of the upper end. The rod must protrude from the surface a distance at least equal to that between the primary receptacle(s) and the outer surface of the outer packaging with a minimum of 200 mm (7.9 inches). One sample must be dropped in a vertical free fall from a height of 1 m (3 feet), measured from the top of the steel rod. A second sample must be dropped from the same height in an orientation perpendicular to that used for the first. In each instance, the packaging must be oriented so the steel rod will impact the primary receptacle(s). For a successful test, there must be no leakage from the primary receptacle(s) following each impact.

(i) *Variations.* The following variations in the primary receptacles placed within the secondary packaging are allowed without additional testing of the completed package. An equivalent level of performance must be maintained.

(1) *Variation 1.* Primary receptacles of equivalent or smaller size as compared to the tested primary receptacles may be used provided they meet all of the following conditions:

(i) The primary receptacles are of similar design to the tested primary receptacle (*e.g.*, shape: round, rectangular, etc.).

(ii) The material of construction of the primary receptacle (glass, plastics, metal, etc.) offers resistance to impact and a stacking force equal to or greater than that of the originally tested primary receptacle.

(iii) The primary receptacles have the same or smaller openings and the closure is of similar design (*e.g.*, screw cap, friction lid, etc.).

(iv) Sufficient additional cushioning material is used to fill void spaces and to prevent significant movement of the primary receptacles.

(v) Primary receptacles are oriented within the intermediate packaging in the same manner as in the tested package.

(2) *Variation 2.* A lesser number of the tested primary receptacles, or of the alternative types of primary receptacles identified in paragraph (i)(1) of this section, may be used provided sufficient cushioning is added to fill the void space(s) and to prevent significant movement of the primary receptacles.

(3) *Variation 3.* Primary receptacles of any type may be placed within a secondary packaging and shipped without testing in the outer packaging provided all of the following conditions are met:

(i) The secondary and outer packaging combination must be successfully tested in accordance with paragraphs (a) through (h) of this section with fragile (*e.g.*, glass) inner receptacles.

(ii) The total combined gross weight of inner receptacles may not exceed one-half the gross weight of inner receptacles used for the drop test in paragraph (d) of this section.

(iii) The thickness of cushioning material between inner receptacles and between inner receptacles and the outside of the secondary packaging may not be reduced below the corresponding thicknesses in the originally tested packaging. If a single inner receptacle was used in the original test, the thickness of cushioning between the inner receptacles must be no less than the thickness of cushioning between the outside of the secondary packaging and the inner receptacle in the original test. When either fewer or smaller inner receptacles are used (as compared to the inner receptacles used in the drop test), sufficient additional cushioning material must be used to fill the void.

(iv) The outer packaging must pass the stacking test in §178.606 while empty. The total weight of identical packages must be based on the combined mass of inner receptacles used in the drop test in paragraph (d) of this section.

(v) For inner receptacles containing liquids, an adequate quantity of absorbent material must be present to absorb the entire liquid contents of the inner receptacles.

(vi) If the outer packaging is intended to contain inner receptacles for

liquids and is not leakproof, or is intended to contain inner receptacles for solids and is not sift proof, a means of containing any liquid or solid contents in the event of leakage must be provided. This can be a leakproof liner, plastic bag, or other equally effective means of containment.

(vii) In addition, the marking required in § 178.503(f) of this subchapter must be followed by the letter ''U''.

[Amdt. 178–97, 55 FR 52723, Dec. 21, 1990, as amended by Amdt. 178–111, 60 FR 48787, Sept. 20, 1995; 67 FR 53143, Aug. 14, 2002; 69 FR 54046, Sept. 7, 2004]

Subpart N—IBC Performance-Oriented Standards

§ 178.700 Purpose, scope and definitions.

(a) This subpart prescribes requirements applying to IBCs intended for the transportation of hazardous materials. Standards for these packagings are based on the UN Recommendations.

(b) Terms used in this subpart are defined in § 171.8 of this subchapter and in paragraph (c) of this section.

(c) The following definitions pertain to the IBC standards in this subpart.

(1) Body means the receptacle proper (including openings and their closures, but not including service equipment) that has a volumetric capacity of not more than 3 cubic meters (3,000 L, 793 gallons, or 106 cubic feet).

(2) *Service equipment* means filling and discharge, pressure relief, safety, heating and heat-insulating devices and measuring instruments.

(3) *Structural equipment* means the reinforcing, fastening, handling, protective or stabilizing members of the body or stacking load bearing structural members (such as metal cages).

(4) *Maximum permissible gross mass* means the mass of the body, its service equipment, structural equipment and the maximum net mass (see § 171.8 of this subchapter).

[Amdt. 178–103, 59 FR 38068, July 26, 1994, as amended by Amdt. 178–108, 60 FR 40038, Aug. 4, 1995; 66 FR 45386, 45387, Aug. 28, 2001; 73 FR 57008, Oct. 1, 2008; 75 FR 5396, Feb. 2, 2010]

§ 178.702 IBC codes.

(a) Intermediate bulk container code designations consist of: two numerals specified in paragraph (a)(1) of this section; followed by the capital letter(s) specified in paragraph (a)(2) of this section; followed, when specified in an individual section, by a numeral indicating the category of intermediate bulk container.

(1) IBC code number designations are as follows:

Type	For solids, discharged		For liquids
	by gravity	Under pressure of more than 10 kPa (1.45 psig)	
Rigid	11	21	31
Flexible	13		

(2) Intermediate bulk container code letter designations are as follows:

''A'' means steel (all types and surface treatments).
''B'' means aluminum.
''C'' means natural wood.
''D'' means plywood.
''F'' means reconstituted wood.
''G'' means fiberboard.
''H'' means plastic.
''L'' means textile.
''M'' means paper, multiwall.
''N'' means metal (other than steel or aluminum).

(b) For composite IBCs, two capital letters are used in sequence following the numeral indicating IBC design type. The first letter indicates the material of the IBC inner receptacle. The second letter indicates the material of the outer IBC. For example, 31HA1 is a composite IBC with a plastic inner receptacle and a steel outer packaging.

[Amdt. 178–103, 59 FR 38068, July 26, 1994, as amended at 66 FR 45386, Aug. 28, 2001]

§ 178.703 Marking of IBCs.

(a) The manufacturer shall:

(1) Mark every IBC in a durable and clearly visible manner. The marking may be applied in a single line or in multiple lines provided the correct sequence is followed with the information required by this section in letters, numerals and symbols of at least 12 mm in height. This minimum marking size applies only to IBCs manufactured after October 1, 2001). The following information is required in the sequence presented:

(i) Except as provided in §178.503(e)(1)(ii), the United Nations symbol as illustrated in §178.503(e)(1)(i). For metal IBCs on which the marking is stamped or embossed, the capital letters ''UN'' may be applied instead of the symbol.

(ii) The code number designating IBC design type according to §178.702(a). The letter ''W'' must follow the IBC design type identification code on an IBC when the IBC differs from the requirements in subpart N of this part, or is tested using methods other than those specified in this subpart, and is approved by the Associate Administrator in accordance with the provisions in §178.801(i).

(iii) A capital letter identifying the performance standard under which the design type has been successfully tested, as follows:

(A) X—for IBCs meeting Packing Group I, II and III tests;

(B) Y—for IBCs meeting Packing Group II and III tests; and

(C) Z—for IBCs meeting only Packing Group III tests.

(iv) The month (designated numerically) and year (last two digits) of manufacture.

(v) The country authorizing the allocation of the mark. The letters 'USA' indicate that the IBC is manufactured and marked in the United States in compliance with the provisions of this subchapter.

(vi) The name and address or symbol of the manufacturer or the approval agency certifying compliance with subparts N and O of this part. Symbols, if used, must be registered with the Associate Administrator.

(vii) The stacking test load in kilograms (kg). For IBCs not designed for stacking, the figure ''0'' must be shown.

(viii) The maximum permissible gross mass in kg.

(2) The following are examples of symbols and required markings:

(i) For a metal IBC containing solids discharged by gravity made from steel:

11A/Y/02 92/USA/ABC/5500/1500

(ii) For a flexible IBC containing solids discharged by gravity and made from woven plastic with a liner:

13H3/Z/03 92/USA/ABC/0/1500

(iii) For a rigid plastic IBC containing liquids, made from plastic with structural equipment withstanding the stack load and with a manufacturer's symbol in place of the manufacturer's name and address:

31H1/Y/04 93/USA/M9399/10800/1200

(iv) For a composite IBC containing liquids, with a rigid plastic inner receptacle and an outer steel body and with the symbol of a DOT approved third-party test laboratory:

31HA1/Y/05 93/USA/+ZT1235/10800/1200

(b) *Additional marking.* In addition to markings required in paragraph (a) of this section, each IBC must be marked as follows in a place near the markings required in paragraph (a) of this section that is readily accessible for inspection. Where units of measure are used, the metric unit indicated (e.g., 450 L) must also appear.

(1) For each rigid plastic and composite IBC, the following markings must be included:

(i) Rated capacity in L of water at 20 °C (68 °F);

(ii) Tare mass in kilograms;

(iii) Gauge test pressure in kPa;

(iv) Date of last leakproofness test, if applicable (month and year); and

(v) Date of last inspection (month and year).

(2) For each metal IBC, the following markings must be included on a metal corrosion-resistant plate:

(i) Rated capacity in L of water at 20 °C (68 °F);

(ii) Tare mass in kilograms;

(iii) Date of last leakproofness test, if applicable (month and year);

(iv) Date of last inspection (month and year);

(v) Maximum loading/discharge pressure, in kPa, if applicable;

(vi) Body material and its minimum thickness in mm; and

(vii) Serial number assigned by the manufacturer.

(3) Markings required by paragraph (b)(1) or (b)(2) of this section may be preceded by the narrative description of the marking, e.g. ''Tare Mass: * * *'' where the ''* * *'' are replaced with the tare mass in kilograms of the IBC.

(4) For each fiberboard and wooden IBC, the tare mass in kg must be shown.

(5) Each flexible IBC may be marked with a pictogram displaying recommended lifting methods.

(6) For each composite IBC, the inner receptacle must be marked with at least the following information:

(i) The code number designating the IBC design type, the name and address or symbol of the manufacturer, the date of manufacture and the country authorizing the allocation of the mark as specified in paragraph (a) of this section;

(ii) When a composite IBC is designed in such a manner that the outer casing is intended to be dismantled for transport when empty (such as, for the return of the IBC for reuse to the original consignor), each of the parts intended to be detached when so dismantled must be marked with the month and year of manufacture and the name or symbol of the manufacturer.

(7) The symbol applicable to an IBC designed for stacking or not designed for stacking, as appropriate, must be

marked on all IBCs manufactured, repaired or remanufactured after January 1, 2011 as follows:

(i)

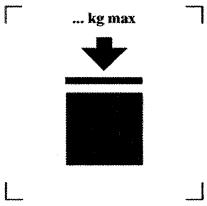

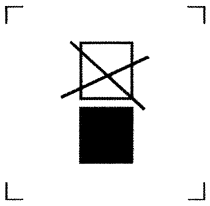

(ii) Display the symbol in a durable and visible manner.

(iii) The symbol must not be less than 100 mm (3.9 inches) by 100 mm (3.9 inches).

(iv) For IBCs designed for stacking, the maximum permitted stacking load applicable when the IBC is in use must be displayed with the symbol. The mass in kilograms (kg) marked above the symbol must not exceed the load imposed during the design test, as indicated by the marking in paragraph (a)(1)(vii) of this section, divided by 1.8. The letters and numbers indicating the mass must be at least 12 mm (0.48 inches).

[Amdt. 178–103, 59 FR 38068, July 26, 1994, as amended by Amdt. 178–119, 62 FR 24743, May 6, 1997; 64 FR 10782, Mar. 5, 1999; 65 FR 50462, Aug. 18, 2000; 65 FR 58632, Sept. 29, 2000; 66 FR 33451, June 21, 2001; 66 FR 45387, Aug. 28, 2001; 74 FR 2269, Jan. 14, 2009; 75 FR 74, Jan. 4, 2010; 75 FR 5396, Feb. 2, 2010; 76 FR 3389, Jan. 19, 2011]

§ 178.704 General IBC standards.

(a) Each IBC must be resistant to, or protected from, deterioration due to exposure to the external environment. IBCs intended for solid hazardous materials must be sift-proof and water-resistant.

(b) All service equipment must be so positioned or protected as to minimize potential loss of contents resulting from damage during IBC handling and transportation.

(c) Each IBC, including attachments, and service and structural equipment, must be designed to withstand, without loss of hazardous materials, the internal pressure of the contents and the stresses of normal handling and transport. An IBC intended for stacking must be designed for stacking. Any lifting or securing features of an IBC must be of sufficient strength to withstand the normal conditions of handling and transportation without gross distortion or failure and must be positioned so as to cause no undue stress in any part of the IBC.

(d) An IBC consisting of a packaging within a framework must be so constructed that:

(1) The body is not damaged by the framework;

(2) The body is retained within the framework at all times; and

(3) The service and structural equipment are fixed in such a way that they cannot be damaged if the connections between body and frame allow relative expansion or motion.

(e) Bottom discharge valves must be secured in the closed position and the discharge system suitably protected from damage. Valves having lever closures must be secured against accidental opening. The open or closed position of each valve must be readily apparent. For each IBC containing a liquid, a secondary means of sealing the discharge aperture must also be provided, e.g., by a blank flange or equivalent device.

(f) IBC design types must be constructed in such a way as to be bottom-lifted or top-lifted as specified in §§ 178.811 and 178.812.

[Amdt. 178–103, 59 FR 38068, July 26, 1994, as amended at 66 FR 45386, Aug. 28, 2001; 68 FR 61942, Oct. 30, 2003]

§ 178.705 Standards for metal IBCs.

(a) The provisions in this section apply to metal IBCs intended to contain liquids and solids. Metal IBC types are designated:

(1) 11A, 11B, 11N for solids that are loaded or discharged by gravity.

(2) 21A, 21B, 21N for solids that are loaded or discharged at a gauge pressure greater than 10 kPa (1.45 psig).

(3) 31A, 31B, 31N for liquids.

(b) Definitions for metal IBCs:

(1) *Metal IBC* means an IBC with a metal body, together with appropriate service and structural equipment.

(2) *Protected* means providing the IBC body with additional external protection against impact and abrasion. For example, a multi-layer (sandwich) or double wall construction or a frame with a metal lattice-work casing.

(c) Construction requirements for metal IBCs are as follows:

(1) *Body*. The body must be made of ductile metal materials. Welds must be made so as to maintain design type integrity of the receptacle under conditions normally incident to transportation.

(i) The use of dissimilar metals must not result in deterioration that could affect the integrity of the body.

(ii) Aluminum IBCs intended to contain flammable liquids must have no movable parts, such as covers and closures, made of unprotected steel liable to rust, which might cause a dangerous reaction from friction or percussive contact with the aluminum.

(iii) Metals used in fabricating the body of a metal IBC must meet the following requirements:

(A) For steel, the percentage elongation at fracture must not be less than 10,000/Rm with a minimum of 20 percent; where Rm = minimum tensile strength of the steel to be used, in N/mm^2; if U.S. Standard units of psi are used for tensile strength then the ratio becomes 10,000 × (145/Rm).

(B) For aluminum, the percentage elongation at fracture must not be less than 10,000/(6Rm) with an absolute minimum of eight percent; if U.S. Standard units of psi are used for tensile strength then the ratio becomes 10,000 × 145 / (6Rm).

(C) Specimens used to determine the elongation at fracture must be taken transversely to the direction of rolling and be so secured that:

$$Lo = 5d$$

or

$$Lo = 5.65\sqrt{A}$$

where:

Lo = gauge length of the specimen before the test

d = diameter

A = cross-sectional area of test specimen.

(iv) Minimum wall thickness:

(A) For a reference steel having a product of Rm × Ao = 10,000, where Ao is the minimum elongation (as a percentage) of the reference steel to be used on fracture under tensile stress (Rm × Ao = 10,000 × 145; if tensile strength is in U.S. Standard units of pounds per square inch), the wall thickness must not be less than:

Capacity (C) in liters [1]	Wall thickness (T) in mm			
	Types 11A, 11B, 11N		Types 21A, 21B, 21N, 31A, 31B, 31N	
	Unprotected	Protected	Unprotected	Protected
C≤1000	2.0	1.5	2.5	2.0
1000<C≤2000	T=C/2000 + 1.5	T=C/2000 + 1.0	T=C/2000 + 2.0	T=C/2000 + 1.5
2000<C≤3000	T=C/2000 + 1.5	T=C/2000 + 1.0	T=C/1000 + 1.0	T=C/2000 + 1.5

(B) For metals other than the reference steel described in paragraph (c)(1)(iii)(A) of this section, the minimum wall thickness is the greater of 1.5 mm (0.059 inches) or as determined by use of the following equivalence formula:

FORMULA FOR METRIC UNITS

$$e_1 = \frac{21.4 \times e_0}{\sqrt[3]{Rm_1 \times A_1}}$$

FORMULA FOR U.S. STANDARD UNITS

$$e_1 = \frac{21.4 \times e_0}{\sqrt[3]{(Rm_1 \times A_1)/145}}$$

where:

e_1 = required equivalent wall thickness of the metal to be used (in mm or if e_o is in inches, use formula for U.S. Standard units).

e_o = required minimum wall thickness for the reference steel (in mm or if e_o is in inches, use formula for U.S. Standard units).

Rm_1 = guaranteed minimum tensile strength of the metal to be used (in N/mm^2 or for U.S. Standard units, use psi).

A_1 = minimum elongation (as a percentage) of the metal to be used on fracture under tensile stress (see paragraph (c)(1) of this section).

(C) For purposes of the calculation described in paragraph (c)(1)(iv)(B) of this section, the guaranteed minimum tensile strength of the metal to be used (Rm_1) must be the minimum value according to material standards. However, for austenitic (stainless) steels, the specified minimum value for Rm, according to the material standards, may be increased by up to 15% when a greater value is provided in the material inspection certificate. When no material standard exists for the material in question, the value of Rm must be the minimum value indicated in the material inspection certificate.

(2) *Pressure relief*. The following pressure relief requirements apply to IBCs intended for liquids:

(i) IBCs must be capable of releasing a sufficient amount of vapor in the event of fire engulfment to ensure that no rupture of the body will occur due to pressure build-up. This can be achieved by spring-loaded or non-reclosing pressure relief devices or by other means of construction.

(ii) The start-to-discharge pressure may not be higher than 65 kPa (9 psig) and no lower than the vapor pressure of the hazardous material plus the partial pressure of the air or other inert gases, measured in the IBC at 55 °C (131 °F), determined on the basis of a maximum degree of filling as specified in §173.35(d) of this subchapter. This does not apply to fusible devices unless such devices are the only source of pressure relief for the IBC. Pressure relief devices must be fitted in the vapor space.

(d) Metal IBCs may not have a volumetric capacity greater than 3,000 L (793 gallons) or less than 450 L (119 gallons).

[Amdt. 178–103, 59 FR 38068, July 26, 1994, as amended by Amdt. 178–108, 60 FR 40038, Aug. 4, 1995; Amdt. 178–117, 61 FR 50629, Sept. 26, 1996; 66 FR 33452, June 21, 2001; 66 FR 45386, 45387, Aug. 28, 2001; 68 FR 45041, July 31, 2003; 75 FR 5396, Feb. 2, 2010; 78 FR 1097, Jan. 7, 2013]

§178.706 Standards for rigid plastic IBCs.

(a) The provisions in this section apply to rigid plastic IBCs intended to contain solids or liquids. Rigid plastic IBC types are designated:

(1) 11H1 fitted with structural equipment designed to withstand the whole load when IBCs are stacked, for solids which are loaded or discharged by gravity.

(2) 11H2 freestanding, for solids which are loaded or discharged by gravity.

(3) 21H1 fitted with structural equipment designed to withstand the whole load when IBCs are stacked, for solids which are loaded or discharged under pressure.

(4) 21H2 freestanding, for solids which are loaded or discharged under pressure.

(5) 31H1 fitted with structural equipment designed to withstand the whole load when IBCs are stacked, for liquids.

(6) 31H2 freestanding, for liquids.

(b) Rigid plastic IBCs consist of a rigid plastic body, which may have structural equipment, together with appropriate service equipment.

(c) Rigid plastic IBCs must be manufactured from plastic material of known specifications and be of a strength relative to its capacity and to the service it is required to perform. In addition to conformance to §173.24 of this subchapter, plastic materials must be resistant to aging and to degradation caused by ultraviolet radiation.

(1) If protection against ultraviolet radiation is necessary, it must be provided by the addition of a pigment or inhibiter such as carbon black. These additives must be compatible with the contents and remain effective throughout the life of the IBC body. Where use

is made of carbon black, pigments or inhibitors, other than those used in the manufacture of the tested design type, retesting may be omitted if changes in the carbon black content, the pigment content or the inhibitor content do not adversely affect the physical properties of the material of construction.

(2) Additives may be included in the composition of the plastic material to improve the resistance to aging or to serve other purposes, provided they do not adversely affect the physical or chemical properties of the material of construction.

(3) No used material other than production residues or regrind from the same manufacturing process may be used in the manufacture of rigid plastic IBCs.

(4) Rigid plastic IBCs intended for the transportation of liquids must be capable of releasing a sufficient amount of vapor to prevent the body of the IBC from rupturing if it is subjected to an internal pressure in excess of that for which it was hydraulically tested. This may be achieved by spring-loaded or non-reclosing pressure relief devices or by other means of construction.

(d) Rigid plastic IBCs may not have a volumetric capacity greater than 3,000 L (793 gallons) or less than 450 L (119 gallons).

[Amdt. 178–103, 59 FR 38068, July 26, 1994, as amended at 66 FR 45386, 45387, Aug. 28, 2001; 75 FR 5396, Feb. 2, 2010]

§ 178.707 Standards for composite IBCs.

(a) The provisions in this section apply to composite IBCs intended to contain solids and liquids. To complete the marking codes listed below, the letter ''Z'' must be replaced by a capital letter in accordance with § 178.702(a)(2) to indicate the material used for the outer packaging. Composite IBC types are designated:

(1) 11HZ1 Composite IBCs with a rigid plastic inner receptacle for solids loaded or discharged by gravity.

(2) 11HZ2 Composite IBCs with a flexible plastic inner receptacle for solids loaded or discharged by gravity.

(3) 21HZ1 Composite IBCs with a rigid plastic inner receptacle for solids loaded or discharged under pressure.

(4) 21HZ2 Composite IBCs with a flexible plastic inner receptacle for solids loaded or discharged under pressure.

(5) 31HZ1 Composite IBCs with a rigid plastic inner receptacle for liquids.

(6) 31HZ2 Composite IBCs with a flexible plastic inner receptacle for liquids.

(b) Definitions for composite IBC types:

(1) A *composite IBC* is an IBC which consists of a rigid outer packaging enclosing a plastic inner receptacle together with any service or other structural equipment. The outer packaging of a composite IBC is designed to bear the entire stacking load. The inner receptacle and outer packaging form an integral packaging and are filled, stored, transported, and emptied as a unit.

(2) The term plastic means polymeric materials (i.e., plastic or rubber).

(3) A ''rigid'' inner receptacle is an inner receptacle which retains its general shape when empty without closures in place and without benefit of the outer casing. Any inner receptacle that is not ''rigid'' is considered to be ''flexible.''

(c) Construction requirements for composite IBCs with plastic inner receptacles are as follows:

(1) The outer packaging must consist of rigid material formed so as to protect the inner receptacle from physical damage during handling and transportation, but is not required to perform the secondary containment function. It includes the base pallet where appropriate. The inner receptacle is not intended to perform a containment function without the outer packaging.

(2) A composite IBC with a fully enclosing outer packaging must be designed to permit assessment of the integrity of the inner container following the leakproofness and hydraulic tests. The outer packaging of 31HZ2 composite IBCs must enclose the inner receptacles on all sides.

(3) The inner receptacle must be manufactured from plastic material of known specifications and be of a strength relative to its capacity and to the service it is required to perform. In

addition to conformance with the requirements of §173.24 of this subchapter, the material must be resistant to aging and to degradation caused by ultraviolet radiation. The inner receptacle of 31HZ2 composite IBCs must consist of at least three plies of film.

(i) If necessary, protection against ultraviolet radiation must be provided by the addition of pigments or inhibitors such as carbon black. These additives must be compatible with the contents and remain effective throughout the life of the inner receptacle. Where use is made of carbon black, pigments, or inhibitors, other than those used in the manufacture of the tested design type, retesting may be omitted if the carbon black content, the pigment content, or the inhibitor content do not adversely affect the physical properties of the material of construction.

(ii) Additives may be included in the composition of the plastic material of the inner receptacle to improve resistance to aging, provided they do not adversely affect the physical or chemical properties of the material.

(iii) No used material other than production residues or regrind from the same manufacturing process may be used in the manufacture of inner receptacles.

(iv) Composite IBCs intended for the transportation of liquids must be capable of releasing a sufficient amount of vapor to prevent the body of the IBC from rupturing if it is subjected to an internal pressure in excess of that for which it was hydraulically tested. This may be achieved by spring-loaded or non-reclosing pressure relief devices or by other means of construction.

(4) The strength of the construction material comprising the outer packaging and the manner of construction must be appropriate to the capacity of the composite IBC and its intended use. The outer packaging must be free of any projection that might damage the inner receptacle.

(i) Outer packagings of natural wood must be constructed of well seasoned wood that is commercially dry and free from defects that would materially lessen the strength of any part of the outer packaging. The tops and bottoms may be made of water-resistant reconstituted wood such as hardboard or particle board. Materials other than natural wood may be used for construction of structural equipment of the outer packaging.

(ii) Outer packagings of plywood must be made of well-seasoned, rotary cut, sliced, or sawn veneer, commercially dry and free from defects that would materially lessen the strength of the casing. All adjacent plies must be glued with water-resistant adhesive. Materials other than plywood may be used for construction of structural equipment of the outer packaging. Outer packagings must be firmly nailed or secured to corner posts or ends or be assembled by equally suitable devices.

(iii) Outer packagings of reconstituted wood must be constructed of water-resistant reconstituted wood such as hardboard or particle board. Materials other than reconstituted wood may be used for the construction of structural equipment of reconstituted wood outer packaging.

(iv) Fiberboard outer packagings must be constructed of strong, solid, or double-faced corrugated fiberboard (single or multiwall).

(A) Water resistance of the outer surface must be such that the increase in mass, as determined in a test carried out over a period of 30 minutes by the Cobb method of determining water absorption, is not greater than 155 grams per square meter (0.0316 pounds per square foot)—see ISO 535 (E) (IBR, see §171.7 of this subchapter). Fiberboard must have proper bending qualities. Fiberboard must be cut, creased without cutting through any thickness of fiberboard, and slotted so as to permit assembly without cracking, surface breaks, or undue bending. The fluting of corrugated fiberboard must be firmly glued to the facings.

(B) The ends of fiberboard outer packagings may have a wooden frame or be constructed entirely of wood. Wooden battens may be used for reinforcements.

(C) Manufacturers' joints in the bodies of outer packagings must be taped, lapped and glued, or lapped and stitched with metal staples.

(D) Lapped joints must have an appropriate overlap.

(E) Where closing is effected by gluing or taping, a water-resistant adhesive must be used.

(F) All closures must be sift-proof.

(v) Outer packagings of plastic materials must be constructed in accordance with the relevant provisions of paragraph (c)(3) of this section.

(5) Any integral pallet base forming part of an IBC, or any detachable pallet, must be suitable for the mechanical handling of an IBC filled to its maximum permissible gross mass.

(i) The pallet or integral base must be designed to avoid protrusions that may cause damage to the IBC in handling.

(ii) The outer packaging must be secured to any detachable pallet to ensure stability in handling and transportation. Where a detachable pallet is used, its top surface must be free from sharp protrusions that might damage the IBC.

(iii) Strengthening devices, such as timber supports to increase stacking performance, may be used but must be external to the inner receptacle.

(iv) The load-bearing surfaces of IBCs intended for stacking must be designed to distribute loads in a stable manner. An IBC intended for stacking must be designed so that loads are not supported by the inner receptacle.

(6) Intermediate IBCs of type 31HZ2 must be limited to a capacity of not more than 1,250 L.

(d) Composite IBCs may not have a volumetric capacity greater than 3,000 L (793 gallons) or less than 450 L (119 gallons).

[Amdt. 178–103, 59 FR 38068, July 26, 1994, as amended by Amdt. 178–119, 62 FR 24743, May 6, 1997; 66 FR 45387, Aug. 28, 2001; 67 FR 61016, Sept. 27, 2002; 68 FR 75758, Dec. 31, 2003; 69 FR 54046, Sept. 7, 2004; 75 FR 5396, Feb. 2, 2010]

§ 178.708 Standards for fiberboard IBCs.

(a) The provisions of this section apply to fiberboard IBCs intended to contain solids that are loaded or discharged by gravity. Fiberboard IBCs are designated: 11G.

(b) Definitions for fiberboard IBC types:

(1) *Fiberboard IBCs* consist of a fiberboard body with or without separate top and bottom caps, appropriate service and structural equipment, and if necessary an inner liner (but no inner packaging).

(2) *Liner* means a separate tube or bag, including the closures of its openings, inserted in the body but not forming an integral part of it.

(c) Construction requirements for fiberboard IBCs are as follows:

(1) Top lifting devices are prohibited in fiberboard IBCs.

(2) Fiberboard IBCs must be constructed of strong, solid or double-faced corrugated fiberboard (single or multiwall) that is appropriate to the capacity of the outer packaging and its intended use. Water resistance of the outer surface must be such that the increase in mass, as determined in a test carried out over a period of 30 minutes by the Cobb method of determining water absorption, is not greater than 155 grams per square meter (0.0316 pounds per square foot)—see ISO 535 (E) (IBR, see § 171.7 of this subchapter). Fiberboard must have proper bending qualities. Fiberboard must be cut, creased without cutting through any thickness of fiberboard, and slotted so as to permit assembly without cracking, surface breaks, or undue bending. The fluting of corrugated fiberboard must be firmly glued to the facings.

(i) The walls, including top and bottom, must have a minimum puncture resistance of 15 Joules (11 foot-pounds of energy) measured according to ISO 3036 (IBR, see § 171.7 of this subchapter).

(ii) Manufacturers' joints in the bodies of IBCs must be made with an appropriate overlap and be taped, glued, stitched with metal staples or fastened by other means at least equally effective. Where joints are made by gluing or taping, a water-resistant adhesive must be used. Metal staples must pass completely through all pieces to be fastened and be formed or protected so that any inner liner cannot be abraded or punctured by them.

(3) The strength of the material used and the construction of the liner must be appropriate to the capacity of the IBC and the intended use. Joints and closures must be sift-proof and capable of withstanding pressures and impacts liable to occur under normal conditions of handling and transport.

(4) Any integral pallet base forming part of an IBC, or any detachable pallet, must be suitable for the mechanical handling of an IBC filled to its maximum permissible gross mass.

(i) The pallet or integral base must be designed to avoid protrusions that may cause damage to the IBC in handling.

(ii) The outer packaging must be secured to any detachable pallet to ensure stability in handling and transport. Where a detachable pallet is used, its top surface must be free from sharp protrusions that might damage the IBC.

(iii) Strengthening devices, such as timber supports to increase stacking performance, may be used but must be external to the inner liner.

(iv) The load-bearing surfaces of IBCs intended for stacking must be designed to distribute loads in a stable manner.

(d) Fiberboard IBCs may not have a volumetric capacity greater than 3,000 L (793 gallons) or less than 450 L (119 gallons).

[Amdt. 178–103, 59 FR 38068, July 26, 1994, as amended at 66 FR 45386, Aug. 28, 2001; 68 FR 75758, Dec. 31, 2003; 75 FR 5396, Feb. 2, 2010]

§ 178.709 Standards for wooden IBCs.

(a) The provisions in this section apply to wooden IBCs intended to contain solids that are loaded or discharged by gravity. Wooden IBC types are designated:

(1) 11C Natural wood with inner liner.

(2) 11D Plywood with inner liner.

(3) 11F Reconstituted wood with inner liner.

(b) Definitions for wooden IBCs:

(1) *Wooden IBCs* consist of a rigid or collapsible wooden body together with an inner liner (but no inner packaging) and appropriate service and structural equipment.

(2) *Liner* means a separate tube or bag, including the closures of its openings, inserted in the body but not forming an integral part of it.

(c) Construction requirements for wooden IBCs are as follows:

(1) Top lifting devices are prohibited in wooden IBCs.

(2) The strength of the materials used and the method of construction must be appropriate to the capacity and intended use of the IBC.

(i) Natural wood used in the construction of an IBC must be well-seasoned, commercially dry, and free from defects that would materially lessen the strength of any part of the IBC. Each IBC part must consist of uncut wood or a piece equivalent in strength and integrity. IBC parts are equivalent to one piece when a suitable method of glued assembly is used (i.e., a Lindermann joint, tongue and groove joint, ship lap or rabbet joint, or butt joint with at least two corrugated metal fasteners at each joint, or when other methods at least equally effective are used). Materials other than natural wood may be used for the construction of structural equipment of the outer packaging.

(ii) Plywood used in construction of bodies must be at least 3-ply. Plywood must be made of well-seasoned, rotary-cut, sliced or sawn veneer, commercially dry, and free from defects that would materially lessen the strength of the body. All adjacent plies must be glued with water-resistant adhesive. Materials other than plywood may be used for the construction of structural equipment of the outer packaging.

(iii) Reconstituted wood used in construction of bodies must be water resistant reconstituted wood such as hardboard or particle board. Materials other than reconstituted wood may be used for the construction of structural equipment of the outer packaging.

(iv) Wooden IBCs must be firmly nailed or secured to corner posts or ends or be assembled by similar devices.

(3) The strength of the material used and the construction of the liner must be appropriate to the capacity of the IBC and its intended use. Joints and closures must be sift-proof and capable of withstanding pressures and impacts liable to occur under normal conditions of handling and transportation.

(4) Any integral pallet base forming part of an IBC, or any detachable pallet, must be suitable for the mechanical handling of an IBC filled to its maximum permissible gross mass.

(i) The pallet or integral base must be designed to avoid protrusions that may cause damage to the IBC in handling.

(ii) The outer packaging must be secured to any detachable pallet to ensure stability in handling and transportation. Where a detachable pallet is used, its top surface must be free from sharp protrusions that might damage the IBC.

(iii) Strengthening devices, such as timber supports to increase stacking performance, may be used but must be external to the inner liner.

(iv) The load-bearing surfaces of IBCs intended for stacking must be designed to distribute loads in a stable manner.

(d) Wooden IBCs may not have a volumetric capacity greater than 3,000 L (793 gallons) or less than 450 L (119 gallons).

[Amdt. 178–103, 59 FR 38068, July 26, 1994, as amended at 66 FR 45386, Aug. 28, 2001; 75 FR 5397, Feb. 2, 2010]

§ 178.710 Standards for flexible IBCs.

(a) The provisions of this section apply to flexible IBCs intended to contain solid hazardous materials. Flexible IBC types are designated:

(1) 13H1 woven plastic without coating or liner.

(2) 13H2 woven plastic, coated.

(3) 13H3 woven plastic with liner.

(4) 13H4 woven plastic, coated and with liner.

(5) 13H5 plastic film.

(6) 13L1 textile without coating or liner.

(7) 13L2 textile, coated.

(8) 13L3 textile with liner.

(9) 13L4 textile, coated and with liner.

(10) 13M1 paper, multiwall.

(11) 13M2 paper, multiwall, water resistant.

(b) Definitions for flexible IBCs:

(1) *Flexible IBCs* consist of a body constructed of film, woven plastic, woven fabric, paper, or combination thereof, together with any appropriate service equipment and handling devices, and if necessary, an inner coating or liner.

(2) *Woven plastic* means a material made from stretched tapes or monofilaments.

(3) *Handling device* means any sling, loop, eye, or frame attached to the body of the IBC or formed from a continuation of the IBC body material.

(c) Construction requirements for flexible IBCs are as follows:

(1) The strength of the material and the construction of the flexible IBC must be appropriate to its capacity and its intended use.

(2) All materials used in the construction of flexible IBCs of types 13M1 and 13M2 must, after complete immersion in water for not less than 24 hours, retain at least 85 percent of the tensile strength as measured originally on the material conditioned to equilibrium at 67 percent relative humidity or less.

(3) Seams must be stitched or formed by heat sealing, gluing or any equivalent method. All stitched seam-ends must be secured.

(4) In addition to conformance with the requirements of § 173.24 of this subchapter, flexible IBCs must be resistant to aging and degradation caused by ultraviolet radiation.

(5) For plastic flexible IBCs, if necessary, protection against ultraviolet radiation must be provided by the addition of pigments or inhibitors such as carbon black. These additives must be compatible with the contents and remain effective throughout the life of the container. Where use is made of carbon black, pigments, or inhibitors, other than those used in the manufacture of the tested design type, retesting may be omitted if the carbon black content, the pigment content or the inhibitor content does not adversely affect the physical properties of the material of construction. Additives may be included in the composition of the plastic material to improve resistance to aging, provided they do not adversely affect the physical or chemical properties of the material.

(6) No used material other than production residues or regrind from the same manufacturing process may be used in the manufacture of plastic flexible IBCs. This does not preclude the re-use of component parts such as fittings and pallet bases, provided such components have not in any way been damaged in previous use.

(7) When flexible IBCs are filled, the ratio of height to width may not be more than 2:1.

(d) Flexible IBCs: (1) May not have a volumetric capacity greater than 3,000 L (793 gallons) or less than 56 L (15 gallons); and

(2) Must be designed and tested to a capacity of no less than 50 kg (110 pounds).

[Amdt. 178–103, 59 FR 38068, July 26, 1994, as amended by Amdt. 178–108, 60 FR 40038, Aug. 4, 1995; 66 FR 45386, Aug. 28, 2001; 75 FR 5397, Feb. 2, 2010]

Subpart O—Testing of IBCs

§ 178.800 Purpose and scope.

This subpart prescribes certain testing requirements for IBCs identified in subpart N of this part.

[Amdt. 178–103, 59 FR 38074, July 26, 1994, as amended by 66 FR 45386, Aug. 28, 2001]

§ 178.801 General requirements.

(a) *General*. The test procedures prescribed in this subpart are intended to ensure that IBCs containing hazardous materials can withstand normal conditions of transportation and are considered minimum requirements. Each packaging must be manufactured and assembled so as to be capable of successfully passing the prescribed tests and of conforming to the requirements of § 173.24 of this subchapter at all times while in transportation.

(b) *Responsibility*. It is the responsibility of the IBC manufacturer to assure that each IBC is capable of passing the prescribed tests. To the extent that an IBC assembly function, including final closure, is performed by the person who offers a hazardous material for transportation, that person is responsible for performing the function in accordance with §§ 173.22 and 178.2 of this subchapter.

(c) *Definitions*. For the purpose of this subpart:

(1) *IBC design type* refers to an IBC that does not differ in structural design, size, material of construction, wall thickness, manner of construction and representative service equipment.

(2) *Design qualification testing* is the performance of the drop, leakproofness, hydrostatic pressure, stacking, bottom-lift or top-lift, tear, topple, righting and vibration tests, as applicable, prescribed in this subpart, for each different IBC design type, at the start of production of that packaging.

(3) *Periodic design requalification test* is the performance of the applicable tests specified in paragraph (c)(2) of this section on an IBC design type, in order to requalify the design for continued production at the frequency specified in paragraph (e) of this section.

(4) *Production inspection* is the inspection that must initially be conducted on each newly manufactured IBC.

(5) *Production testing* is the performance of the leakproofness test in accordance with paragraph (f) of this section on each IBC intended to contain solids discharged by pressure or intended to contain liquids.

(6) *Periodic retest and inspection* is performance of the applicable test and inspections on each IBC at the frequency specified in § 180.352 of this subchapter.

(7) *Different IBC design type* is one that differs from a previously qualified IBC design type in structural design, size, material of construction, wall thickness, or manner of construction, but does not include:

(i) A packaging which differs in surface treatment;

(ii) A rigid plastic IBC or composite IBC which differs with regard to additives used to comply with §§ 178.706(c), 178.707(c) or 178.710(c);

(iii) A packaging which differs only in its lesser external dimensions (i.e., height, width, length) provided materials of construction and material thicknesses or fabric weight remain the same;

(iv) A packaging which differs in service equipment.

(d) *Design qualification testing*. The packaging manufacturer shall achieve successful test results for the design qualification testing at the start of production of each new or different IBC design type. The service equipment selected for this design qualification testing shall be representative of the type of service equipment that will be fitted to any finished IBC body under the design. Application of the certification mark by the manufacturer shall constitute certification that the IBC design type passed the prescribed tests in this subpart.

(e) *Periodic design requalification testing*. (1) Periodic design requalification must be conducted on each qualified IBC design type if the manufacturer is to maintain authorization for continued production. The IBC manufacturer

shall achieve successful test results for the periodic design requalification at sufficient frequency to ensure each packaging produced by the manufacturer is capable of passing the design qualification tests. Design requalification tests must be conducted at least once every 12 months.

(2) Changes in the frequency of design requalification testing specified in paragraph (e)(1) of this section are authorized if approved by the Associate Administrator. These requests must be based on:

(i) Detailed quality assurance programs that assure that proposed decreases in test frequency maintain the integrity of originally tested IBC design types; and

(ii) Demonstrations that each IBC produced is capable of withstanding higher standards (e.g., increased drop height, hydrostatic pressure, wall thickness, fabric weight).

(f) *Production testing and inspection.* (1) Production testing consists of the leakproofness test prescribed in §178.813 of this subpart and must be performed on each IBC intended to contain solids discharged by pressure or intended to contain liquids. For this test:

(i) The IBC need not have its closures fitted, except that the IBC must be fitted with its primary bottom closure.

(ii) The inner receptacle of a composite IBC may be tested without the outer IBC body, provided the test results are not affected.

(2) Applicable inspection requirements in §180.352 of this subchapter must be performed on each IBC initially after production.

(g) *Test samples.* The IBC manufacturer shall conduct the design qualification and periodic design requalification tests prescribed in this subpart using random samples of IBCs, according to the appropriate test section.

(h) *Selective testing of IBCs.* Variation of a tested IBC design type is permitted without further testing, provided selective testing demonstrates an equivalent or greater level of safety than the design type tested and which has been approved by the Associate Administrator.

(i) *Approval of equivalent packagings.* An IBC differing from the standards in subpart N of this part, or tested using methods other than those specified in this subpart, may be used if approved by the Associate Administrator. Such IBCs must be shown to be equally effective, and testing methods used must be equivalent.

(j) *Proof of compliance.* Notwithstanding the periodic design requalification testing intervals specified in paragraph (e) of this section, the Associate Administrator, or a designated representative, may at any time require demonstration of compliance by a manufacturer, through testing in accordance with this subpart, that packagings meet the requirements of this subpart. As required by the Associate Administrator, or a designated representative, the manufacturer shall either:

(1) Conduct performance tests or have tests conducted by an independent testing facility, in accordance with this subpart; or

(2) Make a sample IBC available to the Associate Administrator, or a designated representative, for testing in accordance with this subpart.

(k) *Coatings.* If an inner treatment or coating of an IBC is required for safety reasons, the manufacturer shall design the IBC so that the treatment or coating retains its protective properties even after withstanding the tests prescribed by this subpart.

(l) *Record retention.* Following each design qualification test and each periodic retest on an IBC, a test report must be prepared.

(1) The test report must be maintained at each location where the packaging is manufactured, certified, and a design qualification test or periodic retest is conducted as follows:

Responsible party	Duration
Person manufacturing the packaging	As long as manufactured and two years thereafter.
Person performing design testing	Design test maintained for a single or composite packaging for six years after the test is successfully performed and for a combination packaging or packaging intended for infectious substances for seven years after the test is successfully performed.

Responsible party	Duration
Person performing periodic retesting	Performance test maintained for a single or composite packaging for one year after the test is successfully performed and for a combination packaging or packaging intended for infectious substances for two years after the test is successfully performed.

(2) The test report must be made available to a user of a packaging or a representative of the Department upon request. The test report, at a minimum, must contain the following information:

(i) Name and address of test facility;

(ii) Name and address of the person certifying the IBC;

(iii) A unique test report identification;

(iv) Date of test report;

(v) Manufacturer of the IBC;

(vi) Description of the IBC design type (e.g., dimensions, materials, closures, thickness, representative service equipment, etc.);

(viii) Maximum IBC capacity;

(ix) Characteristics of test contents;

(x) Test descriptions and results (including drop heights, hydrostatic pressures, tear propagation length, etc.); and

(xi) The signature of the person conducting the test, and name of the person responsible for testing.

[Amdt. 178–103, 59 FR 38074, July 26, 1994, as amended by Amdt. 178–108, 60 FR 40038, Aug. 4, 1995; 66 FR 45386, Aug. 28, 2001; 66 FR 33452, June 21, 2001; 68 FR 75758, Dec. 31, 2003; 73 FR 57008, Oct. 1, 2008; 74 FR 2269, Jan. 14, 2009; 75 FR 5397, Feb. 2, 2010; 78 FR 14715, Mar. 7, 2013; 78 FR 65487, Oct. 31, 2013]

§ 178.802 Preparation of fiberboard IBCs for testing.

(a) Fiberboard IBCs and composite IBCs with fiberboard outer packagings must be conditioned for at least 24 hours in an atmosphere maintained:

(1) At 50 percent ±2 percent relative humidity, and at a temperature of 23° ±2 °C (73 °F ±4 °F); or

(2) At 65 percent ±2 percent relative humidity, and at a temperature of 20° ±2 °C (68 °F ±4 °F), or 27 °C ±2 °C (81 °F ±4 °F).

(b) Average values for temperature and humidity must fall within the limits in paragraph (a) of this section. Short-term fluctuations and measurement limitations may cause individual measurements to vary by up to ±5 percent relative humidity without significant impairment of test reproducibility.

(c) For purposes of periodic design requalification only, fiberboard IBCs or composite IBCs with fiberboard outer packagings may be at ambient conditions.

[Amdt. 178–103, 59 FR 38074, July 26, 1994, as amended at 66 FR 45386, Aug. 28, 2001]

§ 178.803 Testing and certification of IBCs.

Tests required for the certification of each IBC design type are specified in the following table. The letter X indicates that one IBC (except where noted) of each design type must be subjected to the tests in the order presented:

Performance test	IBC type					
	Metal IBCs	Rigid plastic IBCs	Composite IBCs	Fiber-board IBCs	Wooden IBCs	Flexible IBCs
Vibration	[6] X	[6] X	[6] X	[6] X	[6] X	[1.5] X
Bottom lift	[2] X	X	X	X	X	
Top lift	[2] X	[2] X	[2] X			[2 5] X
Stacking	[7] X	[7] X	[7] X	[7] X	[7] X	[5] X
Leakproofness	[3] X	[3] X	[3] X			
Hydrostatic	[3] X	[3] X	[3] X			
Drop	[4] X	[4] X	[4] X	[4] X	[4] X	[5] X
Topple						[5] X
Righting						[2 5] X
Tear						[5] X

[1] Flexible IBCs must be capable of withstanding the vibration test.

[2] This test must be performed only if IBCs are designed to be handled this way. For metal IBCs, at least one of the bottom lift or top lift tests must be performed.
[3] The leakproofness and hydrostatic pressure tests are required only for IBCs intended to contain liquids or intended to contain solids loaded or discharged under pressure.
[4] Another IBC of the same design type may be used for the drop test set forth in § 178.810 of this subchapter.
[5] Another different flexible IBC of the same design type may be used for each test.
[6] The vibration test may be performed in another order for IBCs manufactured and tested under provisions of an exemption before October 1, 1994 and for non-DOT specification portable tanks tested before October 1, 1994, intended for export.
[7] This test must be performed only if the IBC is designed to be stacked.

[Amdt. 178–108, 60 FR 40039, Aug. 4, 1995, as amended at 64 FR 51919, Sept. 27, 1999; 66 FR 45386, 45390, Aug. 28, 2001]

§ 178.810 Drop test.

(a) *General*. The drop test must be conducted for the qualification of all IBC design types and performed periodically as specified in § 178.801(e) of this subpart.

(b) *Special preparation for the drop test*. (1) Metal, rigid plastic, and composite IBCs intended to contain solids must be filled to not less than 95 percent of their maximum capacity, or if intended to contain liquids, to not less than 98 percent of their maximum capacity. Pressure relief devices must be removed and their apertures plugged or rendered inoperative.

(2) Fiberboard and wooden IBCs must be filled with a solid material to not less than 95 percent of their maximum capacity; the contents must be evenly distributed.

(3) Flexible IBCs must be filled to the maximum permissible gross mass; the contents must be evenly distributed.

(4) Rigid plastic IBCs and composite IBCs with plastic inner receptacles must be conditioned for testing by reducing the temperature of the packaging and its contents to −18 °C (0 °F) or lower. Test liquids must be kept in the liquid state, if necessary, by the addition of anti-freeze. Water/anti-freeze solutions with a minimum specific gravity of 0.95 for testing at −18 °C (0 °F) or lower are considered acceptable test liquids, and may be considered equivalent to water for test purposes. IBCs conditioned in this way are not required to be conditioned in accordance with § 178.802.

(c) *Test method*. (1) Samples of all IBC design types must be dropped onto a rigid, non-resilient, smooth, flat and horizontal surface. The point of impact must be the most vulnerable part of the base of the IBC being tested. Following the drop, the IBC must be restored to the upright position for observation.

(2) IBC design types with a capacity of 0.45 cubic meters (15.9 cubic feet) or less must be subject to an additional drop test.

(d) *Drop height*. (1) For all IBCs, drop heights are specified as follows:

(i) Packing Group I: 1.8 m (5.9 feet).

(ii) Packing Group II: 1.2 m (3.9 feet).

(iii) Packing Group III: 0.8 m (2.6 feet).

(2) Drop tests are to be performed with the solid or liquid to be transported or with a non-hazardous material having essentially the same physical characteristics.

(3) The specific gravity and viscosity of a substituted non-hazardous material used in the drop test for liquids must be similar to the hazardous material intended for transportation. Water also may be used for the liquid drop test under the following conditions:

(i) Where the substances to be carried have a specific gravity not exceeding 1.2, the drop heights must be those specified in paragraph (d)(1) of this section for each IBC design type; and

(ii) Where the substances to be carried have a specific gravity exceeding 1.2, the drop heights must be as follows:

(A) Packing Group I: SG × 1.5 m (4.9 feet).

(B) Packing Group II: SG × 1.0 m (3.3 feet).

(C) Packing Group III: SG × 0.67 m (2.2 feet).

(e) *Criteria for passing the test*. For all IBC design types, there may be no damage which renders the IBC unsafe to be transported for salvage or for disposable, and no loss of contents. The IBC shall be capable of being lifted by an appropriate means until clear of the floor for five minutes. A slight discharge from a closure upon impact is not considered to be a failure of the

IBC provided that no further leakage occurs. A slight discharge (*e.g.*, from closures or stitch holes) upon impact is not considered a failure of the flexible IBC provided that no further leakage occurs after the IBC has been raised clear of the ground.

[Amdt. 178–103, 59 FR 38074, July 26, 1994, as amended at 66 FR 45386, Aug. 28, 2001; 69 FR 76186, Dec. 20, 2004; 71 FR 78635, Dec. 29, 2006; 74 FR 2269, Jan. 14, 2009; 75 FR 5397, Feb. 2, 2010]

§ 178.811 Bottom lift test.

(a) *General*. The bottom lift test must be conducted for the qualification of all IBC design types designed to be lifted from the base.

(b) *Special preparation for the bottom lift test*. The IBC must be loaded to 1.25 times its maximum permissible gross mass, the load being evenly distributed.

(c) *Test method*. All IBC design types must be raised and lowered twice by a lift truck with the forks centrally positioned and spaced at three quarters of the dimension of the side of entry (unless the points of entry are fixed). The forks must penetrate to three quarters of the direction of entry. The test must be repeated from each possible direction of entry.

(d) *Criteria for passing the test*. For all IBC design types designed to be lifted from the base, there may be no permanent deformation which renders the IBC unsafe for transportation and no loss of contents.

[Amdt. 178–103, 59 FR 38074, July 26, 1994, as amended at 66 FR 45386, Aug. 28, 2001]

§ 178.812 Top lift test.

(a) *General*. The top lift test must be conducted for the qualification of all IBC design types designed to be lifted from the top or, for flexible IBCs, from the side.

(b) *Special preparation for the top lift test*. (1) Metal, rigid plastic, and composite IBC design types must be loaded to twice the maximum permissible gross mass with the load being evenly distributed.

(2) Flexible IBC design types must be filled to six times the maximum net mass, the load being evenly distributed.

(c) *Test method*. (1) A metal or flexible IBC must be lifted in the manner for which it is designed until clear of the floor and maintained in that position for a period of five minutes.

(2) Rigid plastic and composite IBC design types must be:

(i) Lifted by each pair of diagonally opposite lifting devices, so that the hoisting forces are applied vertically, for a period of five minutes; and

(ii) Lifted by each pair of diagonally opposite lifting devices, so that the hoisting forces are applied towards the center at 45° to the vertical, for a period of five minutes.

(3) If not tested as indicated in paragraph (c)(1) of this section, a flexible IBC design type must be tested as follows:

(i) Fill the flexible IBC to 95% full with a material representative of the product to be shipped.

(ii) Suspend the flexible IBC by its lifting devices.

(iii) Apply a constant downward force through a specially designed platen. The platen will be a minimum of 60% and a maximum of 80% of the cross sectional surface area of the flexible IBC.

(iv) The combination of the mass of the filled flexible IBC and the force applied through the platen must be a minimum of six times the maximum net mass of the flexible IBC. The test must be conducted for a period of five minutes.

(v) Other equally effective methods of top lift testing and preparation may be used with approval of the Associate Administrator.

(d) *Criteria for passing the test*. For all IBC design types designed to be lifted from the top, there may be no permanent deformation which renders the IBC, including the base pallets when applicable, unsafe for transportation, and no loss of contents.

[Amdt. 178–103, 59 FR 38074, July 26, 1994, as amended at 66 FR 33452, June 21, 2001; 66 FR 45386, Aug. 28, 2001; 68 FR 45042, July 31, 2003]

§ 178.813 Leakproofness test.

(a) *General*. The leakproofness test must be conducted for the qualification of all IBC design types and on all production units intended to contain solids that are loaded or discharged under pressure or intended to contain liquids.

(b) *Special preparation for the leakproofness test.* Vented closures must either be replaced by similar non-vented closures or the vent must be sealed. For metal IBC design types, the initial test must be carried out before the fitting of any thermal insulation equipment. The inner receptacle of a composite IBC may be tested without the outer packaging provided the test results are not affected.

(c) *Test method and pressure applied.* The leakproofness test must be carried out for a suitable length of time using air at a gauge pressure of not less than 20 kPa (2.9 psig). Leakproofness of IBC design types must be determined by coating the seams and joints with a heavy oil, a soap solution and water, or other methods suitable for the purpose of detecting leaks. Other methods, if at least equally effective, may be used in accordance with appendix B of this part, or if approved by the Associate Administrator, as provided in § 178.801(i)).

(d) *Criterion for passing the test.* For all IBC design types intended to contain solids that are loaded or discharged under pressure or intended to contain liquids, there may be no leakage of air from the IBC.

[Amdt. 178–103, 59 FR 38074, July 26, 1994, as amended at 64 FR 10782, Mar. 5, 1999; 66 FR 45185, 45386, Aug. 28, 2001]

§ 178.814 Hydrostatic pressure test.

(a) *General.* The hydrostatic pressure test must be conducted for the qualification of all metal, rigid plastic, and composite IBC design types intended to contain solids that are loaded or discharged under pressure or intended to contain liquids.

(b) *Special preparation for the hydrostatic pressure test.* For metal IBCs, the test must be carried out before the fitting of any thermal insulation equipment. For all IBCs, pressure relief devices and vented closures must be removed and their apertures plugged or rendered inoperative.

(c) *Test method.* Hydrostatic gauge pressure must be measured at the top of the IBC. The test must be carried out for a period of at least 10 minutes applying a hydrostatic gauge pressure not less than that indicated in paragraph (d) of this section. The IBCs may not be mechanically restrained during the test.

(d) *Hydrostatic gauge pressure applied.* (1) For metal IBC design types, 31A, 31B, 31N: 65 kPa gauge pressure (9.4 psig).

(2) For metal IBC design types 21A, 21B, 21N, 31A, 31B, 31N: 200 kPa (29 psig). For metal IBC design types 31A, 31B and 31N, the tests in paragraphs (d)(1) and (d)(2) of this section must be conducted consecutively.

(3) For metal IBCs design types 21A, 21B, and 21N, for Packing Group I solids: 250 kPa (36 psig) gauge pressure.

(4) For rigid plastic IBC design types 21H1 and 21H2 and composite IBC design types 21HZ1 and 21HZ2: 75 kPa (11 psig).

(5) For rigid plastic IBC design types 31H1 and 31H2 and composite IBC design types 31HZ1 and 31HZ2: whichever is the greater of:

(i) The pressure determined by any one of the following methods:

(A) The gauge pressure (pressure in the IBC above ambient atmospheric pressure) measured in the IBC at 55 °C (131 °F) multiplied by a safety factor of 1.5. This pressure must be determined on the basis of the IBC being filled and closed to no more than 98 percent capacity at 15 °C (60 °F);

(B) If absolute pressure (vapor pressure of the hazardous material plus atmospheric pressure) is used, 1.5 multiplied by the vapor pressure of the hazardous material at 55 °C (131 °F) minus 100 kPa (14.5 psi). If this method is chosen, the hydrostatic test pressure applied must be at least 100 kPa gauge pressure (14.5 psig); or

(C) If absolute pressure (vapor pressure of the hazardous material plus atmospheric pressure) is used, 1.75 multiplied by the vapor pressure of the hazardous material at 50 °C (122 °F) minus 100 kPa (14.5 psi). If this method is chosen, the hydrostatic test pressure applied must be at least 100 kPa gauge pressure (14.5 psig); or

(ii) Twice the greater of: (A) The static pressure of the hazardous material on the bottom of the IBC filled to 98 percent capacity; or

(B) The static pressure of water on the bottom of the IBC filled to 98 percent capacity.

(e) *Criteria for passing the test(s).* (1) For metal IBCs, subjected to the 65 kPa (9.4 psig) test pressure specified in paragraph (d)(1) of this section, there may be no leakage or permanent deformation that would make the IBC unsafe for transportation.

(2) For metal IBCs intended to contain liquids, when subjected to the 200 kPa (29 psig) and the 250 kPa (36 psig) test pressures specified in paragraphs (d)(2) and (d)(3) of this section, respectively, there may be no leakage.

(3) For rigid plastic IBC types 21H1, 21H2, 31H1, and 31H2, and composite IBC types 21HZ1, 21HZ2, 31HZ1, and 31HZ2, there may be no leakage and no permanent deformation which renders the IBC unsafe for transportation.

[Amdt. 178–103, 59 FR 38074, July 26, 1994, as amended at 66 FR 45185, 45386, Aug. 28, 2001]

§ 178.815 Stacking test.

(a) *General.* The stacking test must be conducted for the qualification of all IBC design types intended to be stacked.

(b) *Special preparation for the stacking test.* (1) All IBCs except flexible IBC design types must be loaded to their maximum permissible gross mass.

(2) The flexible IBC must be filled to not less than 95 percent of its capacity and to its maximum net mass, with the load being evenly distributed.

(c) *Test method.* (1) *Design Qualification Testing.* All IBCs must be placed on their base on level, hard ground and subjected to a uniformly distributed superimposed test load for a period of at least five minutes (see paragraph (c)(5) of this section).

(2) Fiberboard, wooden and composite IBCs with outer packagings constructed of other than plastic materials must be subject to the test for 24 hours.

(3) Rigid plastic IBC types and composite IBC types with plastic outer packagings (11HH1, 11HH2, 21HH1, 21HH2, 31HH1 and 31HH2) which bear the stacking load must be subjected to the test for 28 days at 40 °C (104 °F).

(4) For all IBCs, the load must be applied by one of the following methods:

(i) One or more IBCs of the same type loaded to their maximum permissible gross mass and stacked on the test IBC;

(ii) The calculated superimposed test load weight loaded on either a flat plate or a reproduction of the base of the IBC, which is stacked on the test IBC.

(5) *Calculation of superimposed test load.* For all IBCs, the load to be placed on the IBC must be 1.8 times the combined maximum permissible gross mass of the number of similar IBCs that may be stacked on top of the IBC during transportation.

(d) *Periodic Retest.* (1) The package must be tested in accordance with paragraph (c) of this section; *or*

(2) The packaging may be tested using a dynamic compression testing machine. The test must be conducted at room temperature on an empty, unsealed packaging. The test sample must be centered on the bottom platen of the testing machine. The top platen must be lowered until it comes in contact with the test sample. Compression must be applied end to end. The speed of the compression tester must be one-half inch plus or minus one-fourth inch per minute. An initial preload of 50 pounds must be applied to ensure a definite contact between the test sample and the platens. The distance between the platens at this time must be recorded as zero deformation. The force ''A'' then to be applied must be calculated using the applicable formula:

Liquids: $A = (1.8)(n - 1)\ [w + (s \times v \times 8.3 \times .98)] \times 1.5$;

or

Solids: $A = (1.8)(n - 1)\ [w + (s \times v \times 8.3 \times .95)] \times 1.5$

Where:

A = applied load in pounds.

n = maximum number of IBCs being stacked during transportation.

w = maximum weight of one empty container in pounds.

s = specific gravity (liquids) or density (solids) of the lading.

v = actual capacity of container (rated capacity + outage) in gallons.

and:

8.3 corresponds to the weight in pounds of 1.0 gallon of water.

1.5 is a compensation factor converting the static load of the stacking test into a load suitable for dynamic compression testing.

(e) *Criteria for passing the test.* (1) For metal, rigid plastic, and composite

IBCs, there may be no permanent deformation, which renders the IBC unsafe for transportation, and no loss of contents.

(2) For fiberboard and wooden IBCs, there may be no loss of contents and no permanent deformation, which renders the whole IBC, including the base pallet, unsafe for transportation.

(3) For flexible IBCs, there may be no deterioration, which renders the IBC unsafe for transportation, and no loss of contents.

(4) For the dynamic compression test, a container passes the test if, after application of the required load, there is no permanent deformation to the IBC, which renders the whole IBC, including the base pallet, unsafe for transportation; in no case may the maximum deflection exceed one inch.

[75 FR 5397, Feb. 2, 2010]

§ 178.816 Topple test.

(a) *General*. The topple test must be conducted for the qualification of all flexible IBC design types.

(b) *Special preparation for the topple test*. The flexible IBC must be filled to not less than 95 percent of its capacity and to its maximum net mass, with the load being evenly distributed.

(c) *Test method*. A flexible IBC must be toppled onto any part of its top upon a rigid, non-resilient, smooth, flat, and horizontal surface.

(d) *Topple height*. For all flexible IBCs, the topple height is specified as follows:

(1) Packing Group I: 1.8 m (5.9 feet).

(2) Packing Group II: 1.2 m (3.9 feet).

(3) Packing Group III: 0.8 m (2.6 feet).

(e) *Criteria for passing the test*. For all flexible IBCs, there may be no loss of contents. A slight discharge (e.g., from closures or stitch holes) upon impact is not considered to be a failure, provided no further leakage occurs.

[Amdt. 178–103, 59 FR 38074, July 26, 1994, as amended at 66 FR 45386, Aug. 28, 2001]

§ 178.817 Righting test.

(a) *General*. The righting test must be conducted for the qualification of all flexible IBCs designed to be lifted from the top or side.

(b) *Special preparation for the righting test*. The flexible IBC must be filled to not less than 95 percent of its capacity and to its maximum net mass, with the load being evenly distributed.

(c) *Test method*. The flexible IBC, lying on its side, must be lifted at a speed of at least 0.1 m/second (0.33 ft/s) to an upright position, clear of the floor, by one lifting device, or by two lifting devices when four are provided.

(d) *Criterion for passing the test*. For all flexible IBCs, there may be no damage to the IBC or its lifting devices which renders the IBC unsafe for transportation or handling.

[Amdt. 178–103, 59 FR 38074, July 26, 1994, as amended at 66 FR 45386, Aug. 28, 2001]

§ 178.818 Tear test.

(a) *General*. The tear test must be conducted for the qualification of all flexible IBC design types.

(b) *Special preparation for the tear test*. The flexible IBC must be filled to not less than 95 percent of its capacity and to its maximum net mass, the load being evenly distributed.

(c) *Test method*. Once the IBC is placed on the ground, a 100-mm (4-inch) knife score, completely penetrating the wall of a wide face, is made at a 45° angle to the principal axis of the IBC, halfway between the bottom surface and the top level of the contents. The IBC must then be subjected to a uniformly distributed superimposed load equivalent to twice the maximum net mass. The load must be applied for at least five minutes. An IBC which is designed to be lifted from the top or the side must, after removal of the superimposed load, be lifted clear of the floor and maintained in that position for a period of five minutes.

(d) *Criterion for passing the test*. The IBC passes the tear test if the cut does not propagate more than 25 percent of its original length.

[Amdt. 178–103, 59 FR 38074, July 26, 1994, as amended at 66 FR 45386, Aug. 28, 2001]

§ 178.819 Vibration test.

(a) *General*. The vibration test must be conducted for the qualification of all rigid IBC design types. Flexible IBC design types must be capable of withstanding the vibration test.

(b) *Test method*. (1) A sample IBC, selected at random, must be filled and

closed as for shipment. IBCs intended for liquids may be tested using water as the filling material for the vibration test.

(2) The sample IBC must be placed on a vibrating platform with a vertical or rotary double-amplitude (peak-to-peak displacement) of one inch. The IBC must be constrained horizontally to prevent it from falling off the platform, but must be left free to move vertically and bounce.

(3) The test must be performed for one hour at a frequency that causes the package to be raised from the vibrating platform to such a degree that a piece of material of approximately 1.6-mm (0.063-inch) thickness (such as steel strapping or paperboard) can be passed between the bottom of the IBC and the platform. Other methods at least equally effective may be used (see § 178.801(i)).

(c) *Criteria for passing the test.* An IBC passes the vibration test if there is no rupture or leakage.

[Amdt. 178–103, 59 FR 38074, July 26, 1994, as amended by Amdt. 178–108, 60 FR 40038, Aug. 4, 1995; Amdt. 178–110, 60 FR 49111, Sept. 21, 1995; 66 FR 45386, Aug. 28, 2001; 75 FR 5397, Feb. 2, 2010]

Subpart P—Large Packagings Standards

SOURCE: 75 FR 5397, Feb. 2, 2010, unless otherwise noted.

§ 178.900 Purpose and scope.

(a) This subpart prescribes requirements for Large Packaging intended for the transportation of hazardous materials. Standards for these packagings are based on the UN Recommendations.

(b) Terms used in this subpart are defined in § 171.8 of this subchapter.

§ 178.905 Large Packaging identification codes.

Large packaging code designations consist of: two numerals specified in paragraph (a) of this section; followed by the capital letter(s) specified in paragraph (b) of this section.

(a) Large packaging code number designations are as follows: 50 for rigid Large Packagings; or 51 for flexible Large Packagings.

(b) Large Packagings code letter designations are as follows:

(1) ''A'' means steel (all types and surface treatments).

(2) ''B'' means aluminum.

(3) ''C'' means natural wood.

(4) ''D'' means plywood.

(5) ''F'' means reconstituted wood.

(6) ''G'' means fiberboard.

(7) ''H'' means plastic.

(8) ''M'' means paper, multiwall.

(9) ''N'' means metal (other than steel or aluminum).

§ 178.910 Marking of Large Packagings.

(a) The manufacturer must:

(1) Mark every Large Packaging in a durable and clearly visible manner. The marking may be applied in a single line or in multiple lines provided the correct sequence is followed with the information required by this section, in letters, numerals, and symbols of at least 12 mm in height. This minimum marking size requirement applies only to large packages manufactured after January 1, 2014. The following information is required in the sequence presented:

(i) Except as provided in § 178.503(e)(1)(ii), the United Nations packaging symbol as illustrated in § 178.503(e)(1)(i). For metal Large Packagings on which the marking is stamped or embossed, the capital letters ''UN'' may be applied instead of the symbol;

(ii) *The code number designating the Large Packaging design type according to § 178.905.* The letter ''W'' must follow the Large Packaging design type identification code on a Large Packaging when the Large Packaging differs from the requirements in subpart P of this part, or is tested using methods other than those specified in this subpart, and is approved by the Associate Administrator in accordance with the provisions in § 178.955;

(iii) A capital letter identifying the performance standard under which the design type has been successfully tested, as follows:

(A) X—for Large Packagings meeting Packing Groups I, II and III tests;

(B) Y—for Large Packagings meeting Packing Groups II and III tests; and

(C) Z—for Large Packagings meeting Packing Group III test.

(iv) The month (designated numerically) and year (last two digits) of manufacture;

(v) The country authorizing the allocation of the mark. The letters ''USA'' indicate that the Large Packaging is manufactured and marked in the United States in compliance with the provisions of this subchapter.

(vi) The name and address or symbol of the manufacturer or the approval agency certifying compliance with subpart P and subpart Q of this part. Symbols, if used, must be registered with the Associate Administrator.

(vii) The stacking test load in kilograms (kg). For Large Packagings not designed for stacking the figure ''0'' must be shown.

(viii) The maximum permissible gross mass or for flexible Large Packagings, the maximum net mass, in kg.

(2) The following are examples of symbols and required markings:

(i) For a steel Large Packaging suitable for stacking; stacking load: 2,500 kg; maximum gross mass: 1,000 kg.

50A/X/05 05/USA/M9399/2500/1000

(ii) For a plastic Large Packaging not suitable for stacking; maximum gross mass: 800 kg.

50H/Y/11 04/USA/M9399/0/800

(iii) For a Flexible Large Packaging not suitable for stacking; maximum gross mass: 500 kg.

51H/Z/06 04/USA/+ZT1235/0/500

(b) All Large Packages manufactured, repaired or remanufactured after January 1, 2015 must be marked with the symbol applicable to a Large Package designed for stacking or not designed for stacking, as appropriate. The symbol must be not less than 100 mm by 100 mm as follows:

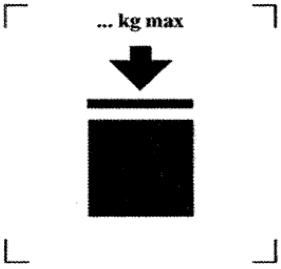

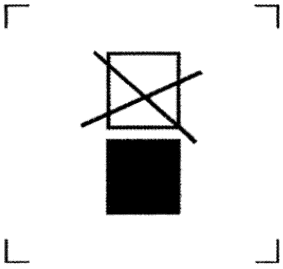

[75 FR 5397, Feb. 2, 2010, as amended at 75 FR 60339, Sept. 30, 2010; 78 FR 1097, Jan. 7, 2013]

§ 178.915 General Large Packaging standards.

(a) Each Large Packaging must be resistant to, or protected from, deterioration due to exposure to the external environment. Large Packagings intended for solid hazardous materials must be sift-proof and water-resistant.

(b) All service equipment must be positioned or protected to minimize potential loss of contents resulting from damage during Large Packaging handling and transportation.

(c) Each Large Packaging, including attachments and service and structural equipment, must be designed to withstand, without loss of hazardous materials, the internal pressure of the contents and the stresses of normal handling and transport. A Large Packaging intended for stacking must be designed for stacking. Any lifting or securing features of a Large Packaging must be sufficient strength to withstand the normal conditions of handling and transportation without gross distortion or failure and must be positioned so as to cause no undue stress in any part of the Large Packaging.

(d) A Large Packaging consisting of packagings within a framework must be so constructed that the packaging is not damaged by the framework and is retained within the framework at all times.

(e) Large Packaging design types must be constructed in such a way as to be bottom-lifted or top-lifted as specified in §§ 178.970 and 178.975.

[75 FR 5397, Feb. 2, 2010, as amended at 75 FR 60339, Sept. 30, 2010]

§ 178.920 Standards for metal Large Packagings.

(a) The provisions in this section apply to metal Large Packagings intended to contain liquids and solids. Metal Large Packaging types are designated:

(1) 50A steel

(2) 50B aluminum

(3) 50N metal (other than steel or aluminum)

(b) Each Large Packaging must be made of suitable ductile metal materials. Welds must be made so as to maintain design type integrity of the receptacle under conditions normally incident to transportation. Low-temperature performance must be taken into account when appropriate.

(c) The use of dissimilar metals must not result in deterioration that could affect the integrity of the Large Packaging.

(d) Metal Large Packagings may not have a volumetric capacity greater than 3,000 L (793 gallons) and not less than 450 L (119 gallons).

§ 178.925 Standards for rigid plastic Large Packagings.

(a) The provisions in this section apply to rigid plastic Large Packagings intended to contain liquids and solids. Rigid plastic Large Packaging types are designated:

(1) 50H rigid plastics.

(2) [Reserved]

(b) A rigid plastic Large Packaging must be manufactured from plastic material of known specifications and be of a strength relative to its capacity and to the service it is required to perform. In addition to conformance to § 173.24 of this subchapter, plastic materials must be resistant to aging and to

degradation caused by ultraviolet radiation.

(1) If protection against ultraviolet radiation is necessary, it must be provided by the addition of a pigment or inhibiter such as carbon black to plastic materials. These additives must be compatible with the contents and remain effective throughout the life of the plastic Large Packaging body. Where use is made of carbon black, pigments or inhibitors, other than those used in the manufacture of the tested design type, retesting may be omitted if changes in the carbon black content, the pigment content or the inhibitor content do not adversely affect the physical properties of the material of construction.

(2) Additives may be included in the composition of the plastic material to improve the resistance to aging or to serve other purposes, provided they do not adversely affect the physical or chemical properties of the material of construction.

(3) No used material other than production residues or regrind from the same manufacturing process may be used in the manufacture of rigid plastic Large Packagings.

(c) Rigid plastic Large Packagings:

(1) May not have a volumetric capacity greater than 3,000 L (793 gallons); and

(2) May not have a volumetric capacity less than 450 L (119 gallons).

§ 178.930 Standards for fiberboard Large Packagings.

(a) The provisions in this section apply to fiberboard Large Packagings intended to contain solids. Rigid fiberboard Large Packaging types are designated:

(1) 50G fiberboard

(2) [Reserved]

(b) *Construction requirements for fiberboard Large Packagings.* (1) Fiberboard Large Packagings must be constructed of strong, solid or double-faced corrugated fiberboard (single or multiwall) that is appropriate to the capacity of the Large Packagings and to their intended use. Water resistance of the outer surface must be such that the increase in mass, as determined in a test carried out over a period of 30 minutes by the Cobb method of determining water absorption, is not greater than 155 grams per square meter (0.0316 pounds per square foot)—*see* ISO 535 (E) (IBR, *see* § 171.7 of this subchapter). Fiberboard must have proper bending qualities. Fiberboard must be cut, creased without cutting through any thickness of fiberboard, and slotted so as to permit assembly without cracking, surface breaks or undue bending. The fluting or corrugated fiberboard must be firmly glued to the facings.

(i) The walls, including top and bottom, must have a minimum puncture resistance of 15 Joules (11 foot-pounds of energy) measured according to ISO 3036 (IBR, *see* § 171.7 of this subchapter).

(ii) Manufacturers' joints in the outer packaging of Large Packagings must be made with an appropriate overlap and be taped, glued, stitched with metal staples or fastened by other means at least equally effective. Where joints are made by gluing or taping, a water resistant adhesive must be used. Metal staples must pass completely through all pieces to be fastened and be formed or protected so that any inner liner cannot be abraded or punctured by them.

(2) *Integral and detachable pallets.* (i) Any integral pallet base forming part of a Large Packaging or any detachable pallet must be suitable for mechanical handling with the Large Packaging filled to its maximum permissible gross mass.

(ii) The pallet or integral base must be designed to avoid protrusions causing damage to the fiberboard Large Packagings in handling.

(iii) The body must be secured to any detached pallet to ensure stability in handling and transport. Where a detachable pallet is used, its top surface must be free from protrusions that might damage the Large Packaging.

(3) Strengthening devices, such as timber supports to increase stacking performance may be used but must be external to the liner.

(4) The load-bearing surfaces of Large Packagings intended for stacking must be designed to distribute the load in a stable manner.

(c) Fiberboard Large Packagings may not have a volumetric capacity greater

than 3,000 L (793 gallons) and not less than 450 L (119 gallons).

[75 FR 5397, Feb. 2, 2010, as amended at 75 FR 60339, Sept. 30, 2010]

§ 178.935 Standards for wooden Large Packagings.

(a) The provisions in this section apply to wooden Large Packagings intended to contain solids. Wooden Large Packaging types are designated:

(1) 50C natural wood.

(2) 50D plywood.

(3) 50F reconstituted wood.

(b) Construction requirements for wooden Large Packagings are as follows:

(1) The strength of the materials used and the method of construction must be appropriate to the capacity and intended use of the Large Packagings.

(i) Natural wood used in the construction of Large Packagings must be well-seasoned, commercially dry and free from defects that would materially lessen the strength of any part of the Large Packagings. Each Large Packaging part must consist of uncut wood or a piece equivalent in strength and integrity. Large Packagings parts are equivalent to one piece when a suitable method of glued assembly is used (*i.e.,* a Lindermann joint, tongue and groove joint, ship, lap or babbet joint; or butt joint with at least two corrugated metal fasteners at each joint, or when other methods at least equally effective are used).

(ii) Plywood used in construction must be at least 3-ply. Plywood must be made of well-seasoned rotary cut, sliced or sawn veneer, commercially dry and free from defects that would materially lessen the strength of the Large Packagings. All adjacent piles must be glued with water resistant adhesive. Materials other than plywood may be used for the construction of the Large Packaging.

(iii) Reconstituted wood used in the construction of Large Packagings must be water resistant reconstituted wood such as hardboard, particle board or other suitable type.

(iv) Wooden Large Packagings must be firmly nailed or secured to corner posts or ends or be assembled by similar devices.

(2) *Integral and detachable pallets.* (i) Any integral pallet base forming part of a Large Packaging, or any detachable pallet must be suitable for mechanical handling of a Large Packaging filled to its maximum permissible gross mass.

(ii) The pallet or integral base must be designed to avoid protrusion that may cause damage to the Large Packaging in handling.

(iii) The body must be secured to any detachable pallet to ensure stability in handling and transportation. Where a detachable pallet is used, its top surface must be free from protrusions that might damage the Large Packaging.

(3) Strengthening devices, such as timber supports to increase stacking performance, may be used but must be external to the liner.

(4) The load bearing surfaces of the Large Packaging must be designed to distribute loads in a stable manner.

(c) Wooden Large Packagings:

(1) May not have a volumetric capacity greater than 3,000 L (793 gallons); and

(2) May not have a volumetric capacity less than 450 L (119 gallons).

§ 178.940 Standards for flexible Large Packagings.

(a) The provisions in this section apply to flexible Large Packagings intended to contain liquids and solids. Flexible Large Packagings types are designated:

(1) 51H flexible plastics.

(2) 51M flexible paper.

(b) Construction requirements for flexible Large Packagings are as follows:

(1) The strength of the material and the construction of the flexible Large Packagings must be appropriate to its capacity and its intended use.

(2) All materials used in the construction of flexible Large Packagings of types 51M must, after complete immersion in water for not less than 24 hours, retain at least 85 percent of the tensile strength as measured originally on the material conditioned to equilibrium at 67 percent relative humidity or less.

(3) Seams must be stitched or formed by heat sealing, gluing or any equivalent method. All stitched seam-ends must be secured.

(4) In addition to conformance with the requirements of § 173.24 of this subchapter, flexible Large Packaging must be resistant to aging and degradation caused by ultraviolet radiation.

(5) For plastic flexible Large Packagings, if necessary, protection against ultraviolet radiation must be provided by the addition of pigments or inhibitors such as carbon black. These additives must be compatible with the contents and remain effective throughout the life of the Large Packaging. Where use is made of carbon black, pigments or inhibitors other than those used in the manufacture of the tested design type, retesting may be omitted if the carbon black content, the pigment content or the inhibitor content do not adversely affect the physical properties of the material of construction.

(6) Additives may be included in the composition of the material of the Large Packaging to improve the resistance to aging, provided they do not adversely affect the physical or chemical properties of the material.

(7) When flexible material Large Packagings are filled, the ratio of height to width must be no more than 2:1.

(c) Flexible Large Packagings:

(1) May not have a volumetric capacity greater than 3,000 L (793 gallons);

(2) May not have a volumetric capacity less than 56 L (15 gallons); and

(3) Must be designed and tested to a capacity of not less than 50 kg (110 pounds).

Subpart Q—Testing of Large Packagings

SOURCE: 75 FR 5400, Feb. 2, 2010, unless otherwise noted.

§ 178.950 Purpose and scope.

This subpart prescribes certain testing requirements for Large Packagings identified in subpart P of this part.

§ 178.955 General requirements.

(a) *General*. The test procedures prescribed in this subpart are intended to ensure that Large Packagings containing hazardous materials can withstand normal conditions of transportation. These test procedures are considered minimum requirements. Each packaging must be manufactured and assembled so as to be capable of successfully passing the prescribed tests and to conform to the requirements of § 173.24 of this subchapter while in transportation.

(b) *Responsibility*. The Large Packaging manufacturer is responsible for ensuring each Large Packaging is capable of passing the prescribed tests. To the extent a Large Packaging's assembly function, including final closure, is performed by the person who offers a hazardous material for transportation, that person is responsible for performing the function in accordance with §§ 173.22 and 178.2 of this subchapter.

(c) *Definitions*. For the purpose of this subpart:

(1) *Large packaging design type* refers to a Large Packaging which does not differ in structural design, size, material of construction and packing.

(2) *Design qualification testing* is the performance of the drop, stacking, and bottom-lift or top-lift tests, as applicable, prescribed in this subpart, for each different Large Packaging design type, at the start of production of that packaging.

(3) *Periodic design requalification test* is the performance of the applicable tests specified in paragraph (c)(2) of this section on a Large Packaging design type, to requalify the design for continued production at the frequency specified in paragraph (e) of this section.

(4) *Production inspection* is the inspection, which must initially be conducted on each newly manufactured Large Packaging.

(5) *Different Large Packaging design type* is one which differs from a previously qualified Large Packaging design type in structural design, size, material of construction, wall thickness, or manner of construction, but does not include:

(i) A packaging which differs in surface treatment;

(ii) A rigid plastic Large Packaging, which differs with regard to additives used to comply with § 178.925(b) or § 178.940(b);

(iii) A packaging which differs only in its lesser external dimensions (*i.e.*, height, width, length) provided materials of construction and material thickness or fabric weight remain the same;

(6) *Remanufactured Large Packaging* is a metal or rigid Large Packaging that is produced as a UN type from a non-UN type or is converted from one UN design type to another UN design type. Remanufactured Large Packagings are subject to the same requirements of this subchapter that apply to new Large Packagings of the same type.

(7) *Reused Large Packaging* is a Large Packaging intended to be refilled and has been examined and found free of defects affecting its ability to withstand the performance tests. *See* also § 173.36(c) of this subchapter.

(d) *Design qualification testing*. The packaging manufacturer must achieve successful test results for the design qualification testing at the start of production of each new or different Large Packaging design type. Application of the certification mark by the manufacturer constitutes certification that the Large Packaging design type passed the prescribed tests in this subpart.

(e) *Periodic design requalification testing*. (1) Periodic design requalification must be conducted on each qualified Large Packaging design type if the manufacturer is to maintain authorization for continued production. The Large Packaging manufacturer must achieve successful test results for the periodic design requalification at sufficient frequency to ensure each packaging produced by the manufacturer is capable of passing the design qualification tests. Design requalification tests must be conducted at least once every 24 months.

(2) Changes in the frequency of design requalification testing specified in paragraph (e)(1) of this section are authorized if approved by the Associate Administrator.

(f) *Test samples*. The manufacturer must conduct the design qualification and periodic tests prescribed in this subpart using random samples of packagings, in the numbers specified in the appropriate test section.

(g) *Selective testing*. The selective testing of Large Packagings, which differ only in minor respects from a tested type is permitted as described in this section. For air transport, Large Packagings must comply with § 173.27(c)(1) and (c)(2) of this subchapter. Variations are permitted in inner packagings of a tested Large Packaging, without further testing of the package, provided an equivalent level of performance is maintained and the methodology used to determine that the inner packaging, including closure, maintains an equivalent level of performance is documented in writing by the person certifying compliance with this paragraph and retained in accordance with paragraph (l) of this section. Permitted variations are as follows:

(1) Inner packagings of equivalent or smaller size may be used provided—

(i) The inner packagings are of similar design to the tested inner packagings (*i.e.*, shape—round, rectangular, etc.);

(ii) The material of construction of the inner packagings (glass, plastic, metal, etc.) offers resistance to impact and stacking forces equal to or greater than that of the originally tested inner packaging;

(iii) The inner packagings have the same or smaller openings and the closure is of similar design (*e.g.*, screw cap, friction lid, etc.);

(iv) Sufficient additional cushioning material is used to take up void spaces and to prevent significant movement of the inner packagings;

(v) Inner packagings are oriented within the outer packaging in the same manner as in the tested package; and

(vi) The gross mass of the package does not exceed that originally tested.

(2) A lesser number of the tested inner packagings, or of the alternative types of inner packagings identified in paragraph (g)(1) of this section, may be used provided sufficient cushioning is added to fill void space(s) and to prevent significant movement of the inner packagings.

(h) *Proof of compliance*. In addition to the periodic design requalification testing intervals specified in paragraph

(e) of this section, the Associate Administrator, or a designated representative, may at any time require demonstration of compliance by a manufacturer, through testing in accordance with this subpart, to ensure packagings meet the requirements of this subpart. As required by the Associate Administrator, or a designated representative, the manufacturer must either:

(1) Conduct performance tests or have tests conducted by an independent testing facility, in accordance with this subpart; or

(2) Make a sample Large Packaging available to the Associate Administrator, or a designated representative, for testing in accordance with this subpart.

(i) *Record retention*. Following each design qualification test and each periodic retest on a Large Packaging, a test report must be prepared.

(1) The test report must be maintained at each location where the packaging is manufactured, certified, and a design qualification test or periodic retest is conducted as follows:

Responsible party	Duration
Person manufacturing the packaging	As long as manufactured and two years thereafter.
Person performing design testing	Design test maintained for a single or composite packaging for six years after the test is successfully performed and for a combination packaging or packaging intended for infectious substances for seven years after the test is successfully performed.
Person performing periodic retesting	Performance test maintained for a single or composite packaging for one year after the test is successfully performed and for a combination packaging or packaging intended for infectious substances for two years after the test is successfully performed.

(2) The test report must be made available to a user of a Large Packaging or a representative of the Department of Transportation upon request. The test report, at a minimum, must contain the following information:

(i) Name and address of test facility;

(ii) Name and address of applicant (where appropriate);

(iii) A unique test report identification;

(iv) Date of the test report;

(v) Manufacturer of the packaging;

(vi) Description of the packaging design type (e.g., dimensions, materials, closures, thickness, etc.), including methods of manufacture (e.g., blow molding) and which may include drawing(s) and/or photograph(s);

(vii) Maximum capacity;

(viii) Characteristics of test contents, e.g., viscosity and relative density for liquids and particle size for solids;

(ix) Mathematical calculations performed to conduct and document testing (for example, drop height, test capacity, outage requirements, etc.);

(x) Test descriptions and results; and

(xi) Signature with the name and title of signatory.

[75 FR 5400, Feb. 2, 2010, as amended at 75 FR 60339, Sept. 30, 2010; 76 FR 3389, Jan. 19, 2011; 78 FR 14715, Mar. 7, 2013; 78 FR 65487, Oct. 31, 2013]

§ 178.960 Preparation of Large Packagings for testing.

(a) Except as otherwise provided in this subchapter, each Large Packaging and package must be closed in preparation for testing and tests must be carried out in the same manner as if prepared for transportation, including inner packagings. All closures must be installed using proper techniques and torques.

(b) For the drop and stacking test, inner receptacles must be filled to not less than 95 percent of maximum capacity (*see* § 171.8 of this subchapter) in the case of solids and not less than 98 percent of maximum in the case of liquids. Bags must be filled to the maximum mass at which they may be used. For Large Packagings where the inner packagings are designed to carry liquids and solids, separate testing is required for both liquid and solid contents. The material to be transported in the packagings may be replaced by a

non-hazardous material, except for chemical compatibility testing or where this would invalidate the results of the tests.

(c) If the material to be transported is replaced for test purposes by a non-hazardous material, the material used must be of the same or higher specific gravity as the material to be carried, and its other physical properties (grain, size, viscosity) which might influence the results of the required tests must correspond as closely as possible to those of the hazardous material to be transported. It is permissible to use additives, such as bags of lead shot, to achieve the requisite total package mass, so long as they do not affect the test results.

(d) Paper or fiberboard Large Packagings must be conditioned for at least 24 hours immediately prior to testing in an atmosphere maintained—

(1) At 50 percent ±2 percent relative humidity, and at a temperature of 23 °C ±2 °C (73 °F ±4 °F). Average values should fall within these limits. Short-term fluctuations and measurement limitations may cause individual measurements to vary by up to ±5 percent relative humidity without significant impairment of test reproducibility;

(2) At 65 percent ±2 percent relative humidity, and at a temperature of 20 °C ±2 °C (68 °F ±4 °F), or 27 °C ±2 °C (81 °F ±4 °F). Average values should fall within these limits. Short-term fluctuations and measurement limitations may cause individual measurements to vary by up to ±5 percent relative humidity without significant impairment of test reproducibility; or

(3) For testing at periodic intervals only (*i.e.*, other than initial design qualification testing), at ambient conditions.

§ 178.965 Drop test.

(a) *General*. The drop test must be conducted for the qualification of all Large Packaging design types and performed periodically as specified in § 178.955(e) of this subpart.

(b) *Special preparation for the drop test*. Large Packagings must be filled in accordance with § 178.960.

(c) *Conditioning*. Rigid plastic Large Packagings and Large Packagings with plastic inner receptacles must be conditioned for testing by reducing the temperature of the packaging and its contents to −18 °C (0 °F) or lower. Test liquids must be kept in the liquid state, if necessary, by the addition of anti-freeze. Water/anti-freeze solutions with a minimum specific gravity of 0.95 for testing at −18 °C (0 °F) or lower are considered acceptable test liquids, and may be considered equivalent to water for test purposes. Large Packagings conditioned in this way are not required to be conditioned in accordance with § 178.960(d).

(d) *Test method*. (1) Samples of all Large Packaging design types must be dropped onto a rigid, non-resilient, smooth, flat and horizontal surface. The point of impact must be the most vulnerable part of the base of the Large Packaging being tested. Following the drop, the Large Packaging must be restored to the upright position for observation.

(2) Large Packaging design types with a capacity of 0.45 cubic meters (15.9 cubic feet) or less must be subject to an additional drop test.

(e) *Drop height*. (1) For all Large Packagings, drop heights are specified as follows:

(i) Packing group I: 1.8 m (5.9 feet)

(ii) Packing group II: 1.2 m (3.9 feet)

(iii) Packing group III: 0.8 m (2.6 feet)

(2) Drop tests are to be performed with the solid or liquid to be transported or with a non-hazardous material having essentially the same physical characteristics.

(3) The specific gravity and viscosity of a substituted non-hazardous material used in the drop test for liquids must be similar to the hazardous material intended for transportation. Water also may be used for the liquid drop test under the following conditions:

(i) Where the substances to be carried have a specific gravity not exceeding 1.2, the drop heights must be those specified in paragraph (e)(1) of this section for each Large Packaging design type; and

(ii) Where the substances to be carried have a specific gravity exceeding 1.2, the drop heights must be as follows:

(A) Packing Group I: SG × 1.5 m (4.9 feet).

(B) Packing Group II: SG × 1.0 m (3.3 feet).

(C) Packing Group III: SG × 0.67 m (2.2 feet).

(f) *Criteria for passing the test.* For all Large Packaging design types there may be no loss of the filling substance from inner packaging(s) or article(s). Ruptures are not permitted in Large Packaging for articles of Class 1 which permit the spillage of loose explosive substances or articles from the Large Packaging. Where a Large Packaging undergoes a drop test, the sample passes the test if the entire contents are retained even if the closure is no longer sift-proof.

[75 FR 5400, Feb. 2, 2010, as amended at 75 FR 60339, Sept. 30, 2010]

§ 178.970 Bottom lift test.

(a) *General.* The bottom lift test must be conducted for the qualification of all Large Packagings design types designed to be lifted from the base.

(b) *Special preparation for the bottom lift test.* The Large Packaging must be loaded to 1.25 times its maximum permissible gross mass, the load being evenly distributed.

(c) *Test method.* All Large Packaging design types must be raised and lowered twice by a lift truck with the forks centrally positioned and spaced at three quarters of the dimension of the side of entry (unless the points of entry are fixed). The forks must penetrate to three quarters of the direction of entry.

(d) *Criteria for passing the test.* For all Large Packagings design types designed to be lifted from the base, there may be no permanent deformation which renders the Large Packaging unsafe for transport and there must be no loss of contents.

§ 178.975 Top lift test.

(a) *General.* The top lift test must be conducted for the qualification of all of Large Packagings design types to be lifted from the top or, for flexible Large Packagings, from the side.

(b) *Special preparation for the top lift test.* (1) Metal and rigid plastic Large Packagings design types must be loaded to twice its maximum permissible gross mass.

(2) Flexible Large Packaging design types must be filled to six times the maximum permissible gross mass, the load being evenly distributed.

(c) *Test method.* (1) A Large Packaging must be lifted in the manner for which it is designed until clear of the floor and maintained in that position for a period of five minutes.

(2) Rigid plastic Large Packaging design types must be:

(i) Lifted by each pair of diagonally opposite lifting devices, so that the hoisting forces are applied vertically for a period of five minutes; and

(ii) Lifted by each pair of diagonally opposite lifting devices so that the hoisting forces are applied towards the center at 45° to the vertical, for a period of five minutes.

(3) If not tested as indicated in paragraph (c)(1) of this section, a flexible Large Packaging design type must be tested as follows:

(i) Fill the flexible Large Packaging to 95% full with a material representative of the product to be shipped.

(ii) Suspend the flexible Large Packaging by its lifting devices.

(iii) Apply a constant downward force through a specially designed platen. The platen will be a minimum of 60 percent and a maximum of 80 percent of the cross sectional surface area of the flexible Large Packaging.

(iv) The combination of the mass of the filled flexible Large Packaging and the force applied through the platen must be a minimum of six times the maximum net mass of the flexible Large Packaging. The test must be conducted for a period of five minutes.

(v) Other equally effective methods of top lift testing and preparation may be used with approval of the Associate Administrator.

(d) *Criterion for passing the test.* For all Large Packagings design types designed to be lifted from the top, there may be no permanent deformation which renders the Large Packagings unsafe for transport and no loss of contents.

§ 178.980 Stacking test.

(a) *General.* The stacking test must be conducted for the qualification of all Large Packagings design types intended to be stacked.

(b) *Special preparation for the stacking test.* (1) All Large Packagings except flexible Large Packaging design types must be loaded to their maximum permissible gross mass.

(2) Flexible Large Packagings must be filled to not less than 95 percent of their capacity and to their maximum net mass, with the load being evenly distributed.

(c) *Test method.* (1) All Large Packagings must be placed on their base on level, hard ground and subjected to a uniformly distributed superimposed test load for a period of at least five minutes (see paragraph (c)(5) of this section).

(2) Fiberboard and wooden Large Packagings must be subjected to the test for 24 hours.

(3) Rigid plastic Large Packagings which bear the stacking load must be subjected to the test for 28 days at 40 °C (104 °F).

(4) For all Large Packagings, the load must be applied by one of the following methods:

(i) One or more Large Packagings of the same type loaded to their maximum permissible gross mass and stacked on the test Large Packaging;

(ii) The calculated superimposed test load weight loaded on either a flat plate or a reproduction of the base of the Large Packaging, which is stacked on the test Large Packaging; or

(5) *Calculation of superimposed test load.* For all Large Packagings, the load to be placed on the Large Packaging must be 1.8 times the combined maximum permissible gross mass of the number of similar Large Packaging that may be stacked on top of the Large Packaging during transportation.

(d) *Periodic Retest.* (1) The package must be tested in accordance with § 178.980(c) of this subpart; or

(2) The packaging may be tested using a dynamic compression testing machine. The test must be conducted at room temperature on an empty, unsealed packaging. The test sample must be centered on the bottom platen of the testing machine. The top platen must be lowered until it comes in contact with the test sample. Compression must be applied end to end. The speed of the compression tester must be one-half inch plus or minus one-fourth inch per minute. An initial preload of 50 pounds must be applied to ensure a definite contact between the test sample and the platens. The distance between the platens at this time must be recorded as zero deformation. The force ''A'' to then be applied must be calculated using the applicable formula:

Liquids: $A = (1.8)(n-1)\ [w + (s \times v \times 8.3 \times .98)] \times 1.5$;

or

Solids: $A = (1.8)(n-1)\ [w + (s \times v \times 8.3 \times .95)] \times 1.5$

Where:

A = applied load in pounds.

n = maximum number of Large Packagings that may be stacked during transportation.

w = maximum weight of one empty container in pounds.

s = specific gravity (liquids) or density (solids) of the lading.

v = actual capacity of container (rated capacity + outage) in gallons.

and:

8.3 corresponds to the weight in pounds of 1.0 gallon of water.

1.5 is a compensation factor that converts the static load of the stacking test into a load suitable for dynamic compression testing.

(e) *Criterion for passing the test.* (1) For metal or rigid plastic Large Packagings, there may be no permanent deformation which renders the Large Packaging unsafe for transportation and no loss of contents.

(2) For fiberboard or wooden Large Packagings, there may be no loss of contents and no permanent deformation that renders the whole Large Packaging, including the base pallet, unsafe for transportation.

(3) For flexible Large Packagings, there may be no deterioration which renders the Large Packaging unsafe for transportation and no loss of contents.

(4) For the dynamic compression test, a container passes the test if, after application of the required load, there is no permanent deformation to the Large Packaging which renders the whole Large Packaging; including the base pallet, unsafe for transportation;

in no case may the maximum deflection exceed one inch.

[75 FR 5400, Feb. 2, 2010, as amended at 75 FR 60339, Sept. 30, 2010; 78 FR 1097, Jan. 7, 2013]

§ 178.985 Vibration test.

(a) *General.* All rigid Large Packaging and flexible Large Packaging design types must be capable of withstanding the vibration test.

(b) *Test method.* (1) A sample Large Packaging, selected at random, must be filled and closed as for shipment. Large Packagings intended for liquids may be tested using water as the filling material for the vibration test.

(2) The sample Large Packaging must be placed on a vibrating platform that has a vertical or rotary double-amplitude (peak-to-peak displacement) of one inch. The Large Packaging must be constrained horizontally to prevent it from falling off the platform, but must be left free to move vertically and bounce.

(3) The sample Large Packaging must be placed on a vibrating platform that has a vertical double-amplitude (peak-to-peak displacement) of one inch. The Large Packaging must be constrained horizontally to prevent it from falling off the platform, but must be left free to move vertically and bounce.

(4) The test must be performed for one hour at a frequency that causes the package to be raised from the vibrating platform to such a degree that a piece of material of approximately 1.6-mm (0.063-inch) in thickness (such as steel strapping or paperboard) can be passed between the bottom of the Large Packaging and the platform. Other methods at least equally effective may be used (*see* § 178.801(i)).

(c) *Criterion for passing the test.* A Large Packaging passes the vibration test if there is no rupture or leakage.

[75 FR 5400, Feb. 2, 2010, as amended at 75 FR 60339, Sept. 30, 2010]

Subpart R—Flexible Bulk Container Standards

SOURCE: 78 FR 1097, Jan. 7, 2013, unless otherwise noted.

§ 178.1000 Purpose and scope.

(a) This subpart prescribes requirements for Flexible Bulk Containers (FBCs) intended for the transportation of hazardous materials. FBC standards in this subpart are based on the UN Model Regulations.

(b) Terms used in this subpart are defined in § 171.8 of this subchapter.

§ 178.1005 Flexible Bulk Container identification code.

The Flexible Bulk Container code designation is BK3.

§ 178.1010 Marking of Flexible Bulk Containers.

(a) The manufacturer must:

(1) Mark every Flexible Bulk Container in a durable and clearly visible manner. The marking may be applied in a single line or in multiple lines provided the correct sequence is followed with the information required by this section. The following information is required in the sequence presented:

(i) Except as provided in § 178.503(e)(1)(ii), the United Nations packaging symbol as illustrated in § 178.503(e)(1)(i).

(ii) The code number designating the Flexible Bulk Container design type according to § 178.1005. The letter ''W'' must follow the Flexible Bulk Container design type identification code on a Flexible Bulk Container when the Flexible Bulk Container differs from the requirements in subpart R of this part, or is tested using methods other than those specified in this subpart, and is approved by the Associate Administrator in accordance with § 178.1035;

(iii) The capital letter Z identifying that the Flexible Bulk Container meets Packing Group III performance standard under which the design type has been successfully tested.

(iv) The month (designated numerically) and year (last two digits) of manufacture;

(v) The country authorizing the allocation of the mark. The letters ''USA'' indicate that the Flexible Bulk Container is manufactured and marked in the United States in compliance with the provisions of this subchapter.

(vi) The name and address or symbol of the manufacturer or the approval

agency certifying compliance with subpart R and subpart S of this part. Symbols, if used, must be registered with the Associate Administrator.

(vii) The stacking test load in kilograms (kg). For Flexible Bulk Containers not designed for stacking the figure ''0'' must be shown.

(viii) The maximum permissible gross mass in kg.

(2) The following is an example of symbols and required markings for a Flexible Bulk container suitable for stacking; stacking load: 1,000 kg; maximum gross mass: 2,500 kg.

BK3/Z/02 12/USA/M9399/1000/2500

(b) [Reserved]

§ 178.1015 General Flexible Bulk Container standards.

(a) Each Flexible Bulk Containers must be sift-proof and completely closed during transport to prevent the release of contents and waterproof.

(b) Parts of the Flexible Bulk Container that are in direct contact with hazardous materials:

(1) Must not be affected or significantly weakened by those hazardous materials.

(2) Must not cause a dangerous effect with the dangerous goods (e.g., catalyzing a reaction or reacting with the hazardous materials).

(3) Must not allow permeation of the hazardous materials that could constitute a danger under conditions normally incident to transportation.

(c) Filling and discharge devices must be so constructed as to be protected against damage during transport and handling. The filling and discharge devices must be capable of being secured against unintended opening.

(d) Slings of the Flexible Bulk Container, if fitted with such, must withstand pressure and dynamic forces which can be expected under conditions normally incident to transportation.

(e) Handling devices must be strong enough to withstand repeated use.

(f) A venting device must be fitted to Flexible Bulk Containers intended to transport hazardous materials that may develop dangerous accumulation of gases within the Flexible Bulk Container. Any venting device must be designed so that external foreign substances are prevented from entering the Flexible Bulk Container through the venting device under conditions normally incident to transportation.

§ 178.1020 Period of use for transportation of hazardous materials in Flexible Bulk Containers.

The use of Flexible Bulk Containers for the transport of hazardous materials is permitted for a period of time not to exceed two years from the date of manufacture of the Flexible Bulk Container.

Subpart S—Testing of Flexible Bulk Containers

SOURCE: 78 FR 1098, Jan. 7, 2013, unless otherwise noted.

§ 178.1030 Purpose and scope.

This subpart prescribes certain testing requirements for Flexible Bulk Containers identified in subpart R of this part.

§ 178.1035 General requirements.

(a) *General.* The test procedures prescribed in this subpart are intended to ensure that Flexible Bulk Containers containing hazardous materials can withstand normal conditions of transportation. These test procedures are considered minimum requirements. Each packaging must be manufactured and assembled so as to be capable of successfully passing the prescribed

tests and to conform to the requirements of §173.24 of this subchapter while in transportation.

(b) *Responsibility*. The Flexible Bulk Container manufacturer is responsible for ensuring each Flexible Bulk Containers is capable of passing the prescribed tests. To the extent a Flexible Bulk Container's assembly function, including final closure, is performed by the person who offers a hazardous material for transportation, that person is responsible for performing the function in accordance with §§173.22 and 178.2 of this subchapter.

(c) *Definitions*. For the purpose of this subpart:

(1) *Flexible Bulk Container design type* refers to a Flexible Bulk Container that does not differ in structural design, size, material of construction and packing.

(2) *Design qualification testing* is the performance of the drop, topple, righting, tear, stacking, and top-lift tests prescribed in this subpart, for each different Flexible Bulk Container design type, at the start of production of that packaging.

(3) *Periodic design requalification test* is the performance of the applicable tests specified in paragraph (c)(2) of this section on a Flexible Bulk Container design type, to requalify the design for continued production at the frequency specified in paragraph (e) of this section.

(4) *Production inspection* is the inspection that must initially be conducted on each newly manufactured Flexible Bulk Container.

(5) *Different Flexible Bulk Container design type* is one that differs from a previously qualified Flexible Bulk Container design type in structural design, size, material of construction, wall thickness, or manner of construction, but does not include:

(i) A packaging that differs in surface treatment;

(ii) A packaging that differs only in its lesser external dimensions (*i.e.*, height, width, length) provided materials of construction and material thickness or fabric weight remain the same;

(d) *Design qualification testing*. The packaging manufacturer must achieve successful test results for the design qualification testing at the start of production of each new or different Flexible Bulk Container design type. Application of the certification mark by the manufacturer constitutes certification that the Flexible Bulk Container design type passed the prescribed tests in this subpart.

(e) *Periodic design requalification testing*. (1) Periodic design requalification must be conducted on each qualified Flexible Bulk Container design type if the manufacturer is to maintain authorization for continued production. The Flexible Bulk Container manufacturer must achieve successful test results for the periodic design requalification at sufficient frequency to ensure each packaging produced by the manufacturer is capable of passing the design qualification tests. Design requalification tests must be conducted at least once every 24 months.

(2) Changes in the frequency of design requalification testing specified in paragraph (e)(1) of this section are authorized if approved by the Associate Administrator.

(f) *Test samples*. The manufacturer must conduct the design qualification and periodic tests prescribed in this subpart using random samples of packagings, in the numbers specified in the appropriate test section.

(g) *Proof of compliance*. In addition to the periodic design requalification testing intervals specified in paragraph (e) of this section, the Associate Administrator, or a designated representative, may at any time require demonstration of compliance by a manufacturer, through testing in accordance with this subpart, to ensure packagings meet the requirements of this subpart. As required by the Associate Administrator, or a designated representative, the manufacturer must either:

(1) Conduct performance tests or have tests conducted by an independent testing facility, in accordance with this subpart; or

(2) Make a sample Flexible Bulk Container available to the Associate Administrator, or a designated representative, for testing in accordance with this subpart.

(h) *Record retention*. Following each design qualification test and each periodic retest on a Flexible Bulk Container, a test report must be prepared. The test report must be maintained at each location where the Flexible Bulk Container is manufactured and each location where the design qualification tests are conducted, for as long as the Flexible Bulk Container is produced and for at least two years thereafter, and at each location where the periodic retests are conducted until such tests are successfully performed again and a new test report produced. In addition, a copy of the test report must be maintained by a person certifying compliance with this part. The test report must be made available to a user of a Flexible Bulk Container or a representative of the Department upon request. The test report, at a minimum, must contain the following information:

(1) Name and address of test facility;

(2) Name and address of applicant (where appropriate);

(3) A unique test report identification;

(4) Date of the test report;

(5) Manufacturer of the packaging;

(6) Description of the flexible bulk container design type (e.g., dimensions materials, closures, thickness, etc.), including methods of manufacture (e.g., blow molding) and which may include drawing(s) and/or photograph(s);

(7) Maximum capacity;

(8) Characteristics of test contents (e.g., particle size for solids);

(9) Mathematical calculations performed to conduct and document testing (e.g., drop height, test capacity, outage requirements, etc.);

(10) Test descriptions and results; and

(11) Signature with the name and title of signatory.

§ 178.1040 Preparation of Flexible Bulk Containers for testing.

(a) Except as otherwise provided in this subchapter, each Flexible Bulk Container must be closed in preparation for testing and tests must be carried out in the same manner as if prepared for transportation. All closures must be installed using proper techniques and torques.

(b) If the material to be transported is replaced for test purposes by a non-hazardous material, the physical properties (grain, size, viscosity) of the replacement material used that might influence the results of the required tests must correspond as closely as possible to those of the hazardous material to be transported. It is permissible to use additives, such as bags of lead shot, to achieve the requisite total package mass, so long as they do not affect the test results.

§ 178.1045 Drop test.

(a) *General*. The drop test must be conducted for the qualification of all Flexible Bulk Container design types and performed periodically as specified in § 178.1035(e) of this subpart.

(b) *Special preparation for the drop test*. Flexible Bulk Containers must be filled to their maximum permissible gross mass.

(c) *Test method*. (1) A sample of all Flexible Bulk Container design types must be dropped onto a rigid, non-resilient, smooth, flat and horizontal surface. This test surface must be large enough to be immovable during testing and sufficiently large enough to ensure that the test Flexible Bulk Container falls entirely upon the surface. The test surface must be kept free from local defects capable of influencing the test results.

(2) Following the drop, the Flexible Bulk Container must be restored to the upright position for observation.

(d) *Drop height*. (1) For all Flexible Bulk Containers, drop heights are specified as follows: Packing group III: 0.8 m (2.6 feet)

(2) Drop tests are to be performed with the solid to be transported or with a non-hazardous material having essentially the same physical characteristics.

(e) *Criteria for passing the test*. For all Flexible Bulk Container design types there may be no loss of the filling substance. However a slight discharge (e.g., from closures or stitch holes) upon impact is not considered a failure of the Flexible Bulk Container provided that no further leakage occurs after the container has been restored to the upright position.

§ 178.1050 Top lift test.

(a) *General*. The top lift test must be conducted for the qualification of all of Flexible Bulk Containers design types to be lifted from the top.

(b) *Special preparation for the top lift test*. Flexible Bulk Container design types must be filled to six times the maximum permissible gross mass, the load being evenly distributed.

(c) *Test method*. (1) A Flexible Bulk Container must be lifted in the manner for which it is designed until clear of the floor and maintained in that position for a period of five minutes.

(2) If not tested as indicated in paragraph (c)(1) of this section, a Flexible Bulk Container design type must be tested as follows:

(i) Fill the Flexible Bulk Container to 95% full with a material representative of the product to be shipped.

(ii) Suspend the Flexible Bulk Container by its lifting devices.

(iii) Apply a constant downward force through a specially designed platen. The platen will be a minimum of 60 percent and a maximum of 80 percent of the cross sectional surface area of the Flexible Bulk Container.

(iv) The combination of the mass of the filled Flexible Bulk Container and the force applied through the platen must be a minimum of six times the maximum net mass of the Flexible Bulk Container. The test must be conducted for a period of five minutes.

(v) Other equally effective methods of top lift testing and preparation may be used with approval of the Associate Administrator.

(d) *Criteria for passing the test*. For all Flexible Bulk Containers design types designed to be lifted from the top, there may be no damage to the Flexible Bulk Container or its lifting devices that renders the Flexible Bulk Container unsafe for transport, and no loss of contents.

§ 178.1055 Stacking test.

(a) *General*. The stacking test must be conducted for the qualification of all Flexible Bulk Containers design types.

(b) *Special preparation for the stacking test*. All Flexible Bulk Containers design types must be loaded to their maximum permissible gross mass.

(c) *Test method*. (1) All Flexible Bulk Containers must be placed on their base on level, hard ground and subjected to a uniformly distributed superimposed test load that is four times the design type maximum gross weight for a period of at least twenty-four hours.

(2) For all Flexible Bulk Containers, the load must be applied by one of the following methods:

(i) Four Flexible Bulk Containers of the same type loaded to their maximum permissible gross mass and stacked on the test Flexible Bulk Container;

(ii) The calculated superimposed test load weight loaded on either a flat plate or a reproduction of the base of the Flexible Bulk Container, which is stacked on the test Flexible Bulk Container.

(d) *Criteria for passing the test*. There may be no deterioration that renders the Flexible Bulk Container unsafe for transportation and no loss of contents during the test or after removal of the test load.

§ 178.1060 Topple test.

(a) *General*. The topple test must be conducted for the qualification of all Flexible Bulk Containers design types.

(b) *Special preparation for the topple test*. Flexible Bulk Container design types must be filled to their maximum permissible gross mass, the load being evenly distributed.

(c) *Test method*. Samples of all Flexible Bulk Container design types must be toppled onto any part of its top by lifting the side furthest from the drop edge upon a rigid, non-resilient, smooth, flat and horizontal surface. This test surface must be large enough to be immovable during testing and sufficiently large enough to ensure that the test Flexible Bulk Container falls entirely upon the surface. The test surface must be kept free from local defects capable of influencing the test results.

(d) *Topple height*. (1) For all Flexible Bulk Containers, topple heights are specified as follows: Packing group III: 0.8 m (2.6 feet).

(e) *Criterion for passing the test*. For all Flexible Bulk Container design

types there may be no loss of the filling substance. However a slight discharge (e.g., from closures or stitch holes) upon impact is not considered a failure of the Flexible Bulk Container.

§ 178.1065 Righting test.

(a) *General*. The righting test must be conducted for the qualification of all Flexible Bulk Containers design types designed to be lifted from the top or side.

(b) *Special preparation for the righting test*. Flexible Bulk Container design types must be filled to not less than 95% of their capacity and to their maximum permissible gross mass, the load being evenly distributed.

(c) *Test method*. A sample Flexible Bulk Container design type must be tested; the Flexible Bulk Container should start lying on its side and then must be lifted at a speed of at least 0.1m/s (0.328 ft/s) to an upright position clear of the floor, by no more than half of the lifting devices.

(d) *Criterion for passing the test*. For all Flexible Bulk Container design types there must be no damage that renders the Flexible Bulk Container unsafe for transport or handling.

§ 178.1070 Tear test.

(a) *General*. The tear test must be conducted for the qualification of all of Flexible Bulk Containers design types.

(b) *Special preparation for the tear test*. Flexible Bulk Container design types must be filled its maximum permissible gross mass, the load being evenly distributed.

(c) *Test method*. (1) A Flexible Bulk Container design type must be placed on the ground and a 300 mm (11.9 in) cut shall be made. This 300 mm (11.9 in) cut must:

(i) Completely penetrate all layers of the Flexible Bulk Container on a wall with a wide face.

(ii) Be made at a 45° angle to the principal axis of the Flexible Bulk Container, halfway between the bottom surface and the top level of the contents.

(2) The Flexible Bulk Container after being cut according to the provisions of § 178.1070(c)(1), must be subjected to a uniformly distributed superimposed load equivalent to twice the maximum gross mass of the package. This load must be applied for at least fifteen minutes. Flexible Bulk Containers that are designed to be lifted from the top or the side must, after removal of the superimposed load, be lifted clear of the floor and maintained in that position for a period of fifteen minutes.

(d) *Criterion for passing the test*. For all Flexible Bulk Container design types, the cut must not spread more than an additional 25% of its original length.

APPENDIX A TO PART 178—SPECIFICATIONS FOR STEEL

TABLE 1

[Open-hearth, basic oxygen, or electric steel of uniform quality. The following chemical composition limits are based on ladle analysis:]

Designation	Chemical composition, percent-ladle analysis		
	Grade 1 [1]	Grade 2 [1 2]	Grade 3 [2 4 5]
Carbon	0.10/0.20	0.24 maximum	0.22 maximum.
Manganese	1.10/1.60	0.50/1.00	1.25 maximum.
Phosphorus, maximum	0.04	0.04	0.045.[6]
Sulfur, maximum	0.05	0.05	0.05.
Silicon	0.15/0.30	0.30 maximum	
Copper, maximum	0.40		
Columbium		0.01/0.04	
Heat treatment authorized	([3])	([3])	([3]).
Maximum stress (p.s.i.)	35,000	35,000	35,000.

[1] Addition of other elements to obtain alloying effect is not authorized.
[2] Ferritic grain size 6 or finer according to ASTM E 112–96 (IBR, see § 171.7 of this subchapter).
[3] Any suitable heat treatment in excess of 1,100 °F., except that liquid quenching is not permitted.
[4] Other alloying elements may be added and shall be reported.
[5] For compositions with a maximum carbon content of 0.15 percent of ladle analysis, the maximum limit for manganese on ladle analysis may be 1.40 percent.
[6] Rephosphorized Grade 3 steels containing no more than 0.15 percent phosphorus are permitted if carbon content does not exceed 0.15 percent and manganese does not exceed 1 percent.

CHECK ANALYSIS TOLERANCES

[A heat of steel made under any of the above grades, the ladle analysis of which is slightly out of the specified range is acceptable if the check analysis is within the following variations:]

Element	Limit or maximum specified (percent)	Tolerance (percent) over the maximum limit or under the minimum limit	
		Under minimum limit	Over maximum limit
Carbon	To 0.15 inclusive	0.02	0.03
	Over 0.15 to 0.40 inclusive	0.03	0.04
Manganese	To 0.60 inclusive	0.03	0.03
	Over 0.60 to 1.15 inclusive	0.04	0.04
	Over 1.15 to 2.50 inclusive	0.05	0.05
Phosphorus[7]	All ranges	.....	0.01
Sulfur	All ranges	.....	0.01
Silicon	To 0.30 inclusive	0.02	0.03
	Over 0.30 to 1.00 inclusive	0.05	0.05
Copper	To 1.00 inclusive	0.03	0.03
	Over 1.00 to 2.00 inclusive	0.05	0.05
Nickel	To 1.00 inclusive	0.03	0.03
	Over 1.00 to 2.00 inclusive	0.05	0.05
Chromium	To 0.90 inclusive	0.03	0.03
	Over 0.90 to 2.10 inclusive	0.05	0.05
Molybdenum	To 0.20 inclusive	0.01	0.01
	Over 0.20 to 0.40 inclusive	0.02	0.02
Zirconium	All ranges	0.01	0.05
Columbium	To 0.04 inclusive	0.005	0.01
Aluminum	Over 0.10 to 0.20 inclusive	0.04	0.04
	Over 0.20 to 0.30 inclusive	0.05	0.05

[7] Rephosphorized steels not subject to check analysis for phosphorus.

[Amdt. 178–3, 34 FR 12283, July 25, 1969; 34 FR 12593, Aug. 1, 1969, as amended by Amdt. 178–64, 45 FR 81573, Dec. 11, 1980; Amdt. 178–97, 55 FR 52728, Dec. 21, 1990; 68 FR 75758, Dec. 31, 2003]

APPENDIX B TO PART 178—ALTERNATIVE LEAKPROOFNESS TEST METHODS

In addition to the method prescribed in §178.604 of this subchapter, the following leakproofness test methods are authorized:

(1) *Helium test.* The packaging must be filled with at least 1 L inert helium gas, air tight closed, and placed in a testing chamber. The testing chamber must be evacuated down to a pressure of 5 kPa which equals an over-pressure inside the packaging of 95 kPa. The air in the testing chamber must be analyzed for traces of helium gas by means of a mass spectrograph. The test must be conducted for a period of time sufficient to evacuate the chamber and to determine if there is leakage into or out of the packaging. If helium gas is detected, the leaking packaging must be automatically separated from nonleaking drums and the leaking area determined according to the method prescribed in §178.604(d) of this subchapter. A packaging passes the test if there is no leakage of helium.

(2) *Pressure differential test.* The packaging shall be restrained while either pressure or a vacuum is applied internally. The packaging must be pressurized to the pressure required by §178.604(e) of this subchapter for the appropriate packing group. The method of restraint must not affect the results of the test. The test must be conducted for a period of time sufficient to appropriately pressurize or evacuate the interior of the packaging and to determine if there is leakage into or out of the packaging. A packaging passes the pressure differential test if there is no change in measured internal pressure.

(3) *Solution over seams.* The packaging must be restrained while an internal air pressure is applied; the method of restraint may not affect the results of the test. The exterior surface of all seams and welds must be coated with a solution of soap suds or a water and oil mixture. The test must be conducted for a period of time sufficient to pressurize the interior of the packaging to the specified air pressure and to determine if there is leakage of air from the packaging. A packaging passes the test if there is no leakage of air from the packaging.

(4) *Solution over partial seams test.* For other than design qualification testing, the following test may be used for metal drums: The packaging must be restrained while an internal air pressure of 48 kPa (7.0 psig) is applied; the method of restraint may not affect the results of the test. The packaging must be coated with a soap solution over the entire side seam and a distance of not less than eight inches on each side of the side seam along the chime seam(s). The test must be conducted for a period of time sufficient

to pressurize the interior of the packaging to the specified air pressure and to determine if there is leakage of air from the packaging. A packaging passes the test if there is no leakage of air from the packaging. Chime cuts must be made on the initial drum at the beginning of each production run and on the initial drum after any adjustment to the chime seamer. Chime cuts must be maintained on file in date order for not less than six months and be made available to a representative of the Department of Transportation on request.

[Amdt. 178–97, 55 FR 52728, Dec. 21, 1990, as amended at 56 FR 66287, Dec. 20, 1991; 57 FR 45466, Oct. 1, 1992]

APPENDIX C TO PART 178—NOMINAL AND MINIMUM THICKNESSES OF STEEL DRUMS AND JERRICANS

For each listed packaging capacity, the following table compares the ISO 3574 (IBR, see §171.7 of this subchapter) nominal thickness with the corresponding ISO 3574 minimum thickness.

Maximum capacity (L)	ISO nominal (mm)	Corresponding ISO minimum (mm)
20	0.7	0.63
30	0.8	0.73
40	0.8	0.73
60	1.0	0.92
120	1.0	0.92
220	1.0	0.92
450	1.9	1.77

[Amdt. 178–106, 59 FR 67522, Dec. 29, 1994, as amended at 68 FR 75758, Dec. 31, 2003]

APPENDIX D TO PART 178—THERMAL RESISTANCE TEST

1. *Scope*. This test method evaluates the thermal resistance capabilities of a compressed oxygen generator and the outer packaging for a cylinder of compressed oxygen or other oxidizing gas and an oxygen generator. When exposed to a temperature of 205 °C (400 °F) for a period of not less than three hours, the outer surface of the cylinder may not exceed a temperature of 93 °C (199 °F) and the oxygen generator must not actuate.

2. *Apparatus*.

2.1 *Test Oven*. The oven must be large enough in size to fully house the test outer package without clearance problems. The test oven must be capable of maintaining a minimum steady state temperature of 205 °C (400 °F).

2.2 *Thermocouples*. At least three thermocouples must be used to monitor the temperature inside the oven and an additional three thermocouples must be used to monitor the temperature of the cylinder. The thermocouples must be 1/16 inch, ceramic packed, metal sheathed, type K (Chromel-Alumel), grounded junction with a nominal 30 American wire gauge (AWG) size conductor. The thermocouples measuring the temperature inside the oven must be placed at varying heights to ensure even temperature and proper heat-soak conditions. For the thermocouples measuring the temperature of the cylinder: (1) Two of them must be placed on the outer cylinder side wall at approximately 2 inches (5 cm) from the top and bottom shoulders of the cylinder; and (2) one must be placed on the cylinder valve body near the pressure relief device. Alternatively, the thermocouples may be replaced with other devices such as a remote temperature sensor, metal fuse on the valve, or coated wax, provided the device is tested and the test report is retained for verification. Under this alternative, it is permissible to record the highest temperature to which the cylinder is subjected instead of temperature measurements in intervals of not more than five (5) minutes.

2.3 *Instrumentation*. A calibrated recording device or a computerized data acquisition system with an appropriate range should be provided to measure and record the outputs of the thermocouples.

3. *Test Specimen*.

3.1 *Specimen Configuration*. Each outer package material type and design must be tested, including any features such as handles, latches, fastening systems, etc., that may compromise the ability of the outer package to provide thermal protection.

3.2 *Test Specimen Mounting*. The tested outer package must be supported at the four corners using fire brick or other suitable means. The bottom surface of the outer package must be exposed to allow exposure to heat.

4. *Preparation for Testing*.

4.1 It is recommended that the cylinder be closed at ambient temperature and configured as when filled with a valve and pressure relief device. The oxygen generator must be filled with an oxidizing agent and may be tested with or without packaging.

4.2 Place the package or generator onto supporting bricks or a stand inside the test oven in such a manner to ensure even temperature flow.

5. *Test Procedure*.

5.1 Close oven door and check for proper reading on thermocouples.

5.2 Raise the temperature of the oven to a minimum temperature of 205 °C ±2 °C (400 °F ±5 °F). Maintain a minimum oven temperature of 205 °C ±2 °C (400 °F ±5 °F) for at least three hours. Exposure time begins when the oven steady state temperature reaches a minimum of 205 °C ±2 °C (400 °F ±5 °F).

5.3 At the conclusion of the three-hour period, the outer package may be removed from the oven and allowed to cool naturally.

6. *Recordkeeping*.

6.1 Record a complete description of the material being tested, including the manufacturer, size of cylinder, etc.

6.2 Record any observations regarding the behavior of the test specimen during exposure, such as smoke production, delamination, resin ignition, and time of occurrence of each event.

6.3 Record the temperature and time history of the cylinder temperature during the entire test for each thermocouple location. Temperature measurements must be recorded at intervals of not more than five (5) minutes. Record the maximum temperatures achieved at all three thermocouple locations and the corresponding time.

7. *Requirements*.

7.1 For a cylinder, the outer package must provide adequate protection such that the outer surface of the cylinder and valve does not exceed a temperature of 93 °C (199 °F) at any of the three points where the thermocouples are located.

7.2 For an oxygen generator, the generator must not actuate.

[72 FR 4457, Jan. 31, 2008, as amended at 72 FR 55099, Sept. 28, 2007]

APPENDIX E TO PART 178—FLAME PENETRATION RESISTANCE TEST

(a) *Criteria for Acceptance*. (1) At least three specimens of the outer packaging materials must be tested;

(2) Each test must be conducted on a flat 16 inch × 24 inch test specimen mounted in the horizontal ceiling position of the test apparatus to represent the outer packaging design;

(3) Testing must be conducted on all design features (latches, seams, hinges, etc.) affecting the ability of the outer packaging to safely prevent the passage of fire in the horizontal ceiling position; and

(4) There must be no flame penetration of any specimen within 5 minutes after application of the flame source and the maximum allowable temperature at a point 4 inches above the test specimen, centered over the burner cone, must not exceed 205 °C (400 °F).

(b) *Summary of Method*. This method provides a laboratory test procedure for measuring the capability of cargo compartment lining materials to resist flame penetration with a 2 gallon per hour (GPH) #2 Grade kerosene or equivalent burner fire source. Ceiling and sidewall liner panels may be tested individually provided a baffle is used to simulate the missing panel. Any specimen that passes the test as a ceiling liner panel may be used as a sidewall liner panel.

(c) *Test Specimens*. (1) The specimen to be tested must measure 16 ±⅛ inches (406 ±3 mm) by 24+⅛ inches (610 ±3 mm).

(2) The specimens must be conditioned at 70 °F. ±5 °F. (21 °C. ±2 °C.) and 55% ±5% humidity for at least 24 hours before testing.

(d) *Test Apparatus*. The arrangement of the test apparatus must include the components described in this section. Minor details of the apparatus may vary, depending on the model of the burner used.

(1) *Specimen Mounting Stand*. The mounting stand for the test specimens consists of steel angles.

(2) *Test Burner*. The burner to be used in tesing must—

(i) Be a modified gun type.

(ii) Use a suitable nozzle and maintain fuel pressure to yield a 2 GPH fuel flow. For example: An 80 degree nozzle nominally rated at 2.25 GPH and operated at 85 pounds per square inch (PSI) gauge to deliver 2.03 GPH.

(iii) Have a 12 inch (305 mm) burner extension installed at the end of the draft tube with an opening 6 inches (152 mm) high and 11 inches (280 mm) wide.

(iv) Have a burner fuel pressure regulator that is adjusted to deliver a nominal 2.0 GPH of #2 Grade kerosene or equivalent.

Burner models which have been used successfully in testing are the Lenox Model OB–32, Carlin Model 200 CRD and Park Model DPL.

(3) *Calorimeter*. (i) The calorimeter to be used in testing must be a total heat flux Foil Type Gardon Gage of an appropriate range (approximately 0 to 15.0 British thermal unit (BTU) per ft.^{2} sec., 0–17.0 watts/cm^2). The calorimeter must be mounted in a 6 inch by 12 inch (152 by 305 mm) by ¾ inch (19 mm) thick insulating block which is attached to a steel angle bracket for placement in the test stand during burner calibration as shown in Figure 2 of this part of this appendix.

(ii) The insulating block must be monitored for deterioration and the mounting shimmed as necessary to ensure that the calorimeter face is parallel to the exit plane of the test burner cone.

(4) *Thermocouples*. The seven thermocouples to be used for testing must be 1/16 inch ceramic sheathed, type K, grounded thermocouples with a nominal 30 American wire gage (AWG) size conductor. The seven thermocouples must be attached to a steel angle bracket to form a thermocouple rake for placement in the test stand during burner calibration.

(5) *Apparatus Arrangement*. The test burner must be mounted on a suitable stand to position the exit of the burner cone a distance of 8 inches from the ceiling liner panel and 2 inches from the sidewall liner panel. The burner stand should have the capability of allowing the burner to be swung away from the test specimen during warm-up periods.

(6) *Instrumentation*. A recording potentiometer or other suitable instrument with an appropriate range must be used to measure and record the outputs of the calorimeter and the thermocouples.

(7) *Timing Device*. A stopwatch or other device must be used to measure the time of flame application and the time of flame penetration, if it occurs.

(e) *Preparation of Apparatus*. Before calibration, all equipment must be turned on and allowed to stabilize, and the burner fuel flow must be adjusted as specified in paragraph (d)(2).

(f) *Calibration*. To ensure the proper thermal output of the burner the following test must be made:

(1) Remove the burner extension from the end of the draft tube. Turn on the blower portion of the burner without turning the fuel or igniters on. Measure the air velocity using a hot wire anemometer in the center of the draft tube across the face of the opening. Adjust the damper such that the air velocity is in the range of 1550 to 1800 ft./min. If tabs are being used at the exit of the draft tube, they must be removed prior to this measurement. Reinstall the draft tube extension cone.

(2) Place the calorimeter on the test stand as shown in Figure 2 at a distance of 8 inches (203 mm) from the exit of the burner cone to simulate the position of the horizontal test specimen.

(3) Turn on the burner, allow it to run for 2 minutes for warm-up, and adjust the damper to produce a calorimeter reading of 8.0 ±0.5 BTU per ft.^{2} sec. (9.1 ±0.6 Watts/cm^2).

(4) Replace the calorimeter with the thermocouple rake.

(5) Turn on the burner and ensure that each of the seven thermocouples reads 1700 °F. ±100 °F. (927 °C. ±38 °C.) to ensure steady state conditions have been achieved. If the temperature is out of this range, repeat steps 2 through 5 until proper readings are obtained.

(6) Turn off the burner and remove the thermocouple rake.

(7) Repeat (1) to ensure that the burner is in the correct range.

(g) *Test Procedure*. (1) Mount a thermocouple of the same type as that used for calibration at a distance of 4 inches (102 mm) above the horizontal (ceiling) test specimen. The thermocouple should be centered over the burner cone.

(2) Mount the test specimen on the test stand shown in Figure 1 in either the horizontal or vertical position. Mount the insulating material in the other position.

(3) Position the burner so that flames will not impinge on the specimen, turn the burner on, and allow it to run for 2 minutes. Rotate the burner to apply the flame to the specimen and simultaneously start the timing device.

(4) Expose the test specimen to the flame for 5 minutes and then turn off the burner. The test may be terminated earlier if flame penetration is observed.

(5) When testing ceiling liner panels, record the peak temperature measured 4 inches above the sample.

(6) Record the time at which flame penetration occurs if applicable.

(h) *Test Report*. The test report must include the following:

(1) A complete description of the materials tested including type, manufacturer, thickness, and other appropriate data.

(2) Observations of the behavior of the test specimens during flame exposure such as delamination, resin ignition, smoke, etc., including the time of such occurrence.

(3) The time at which flame penetration occurs, if applicable, for each of the three specimens tested.

Figure 1: Test Apparatus for Horizontal and Vertical Mounting

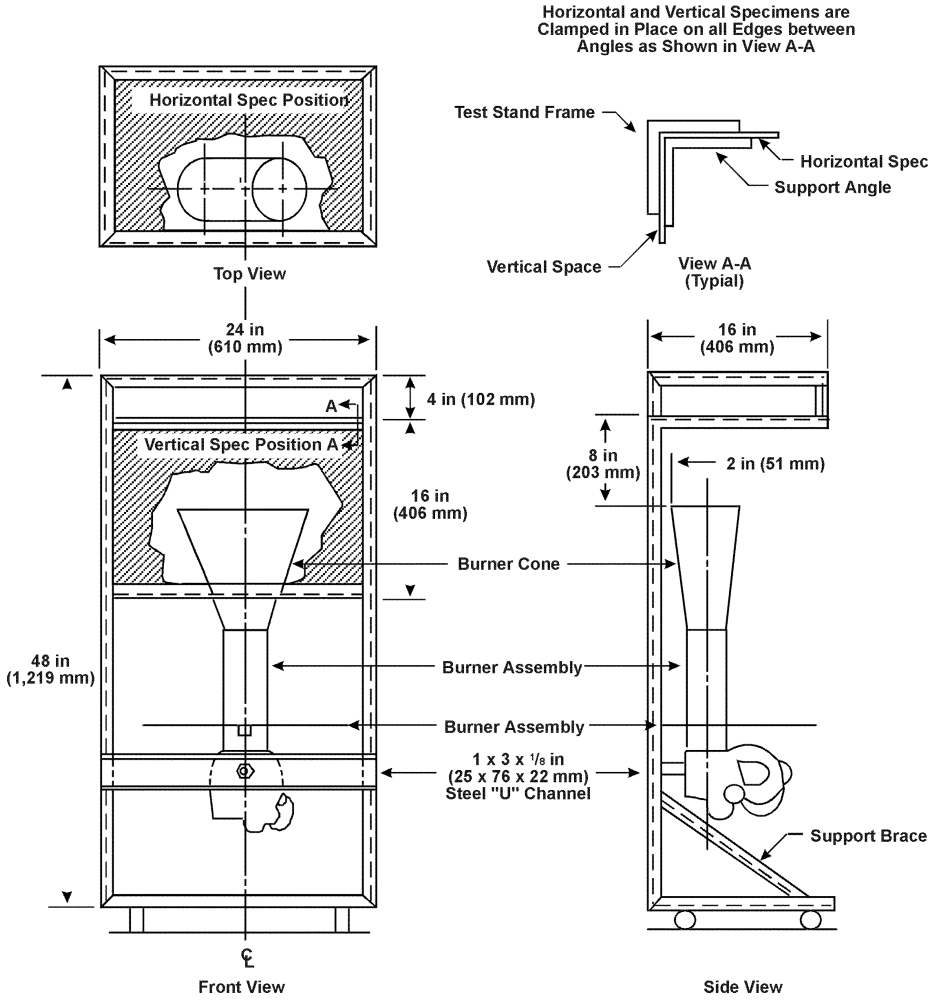

Figure 2: Calorimeter Bracket

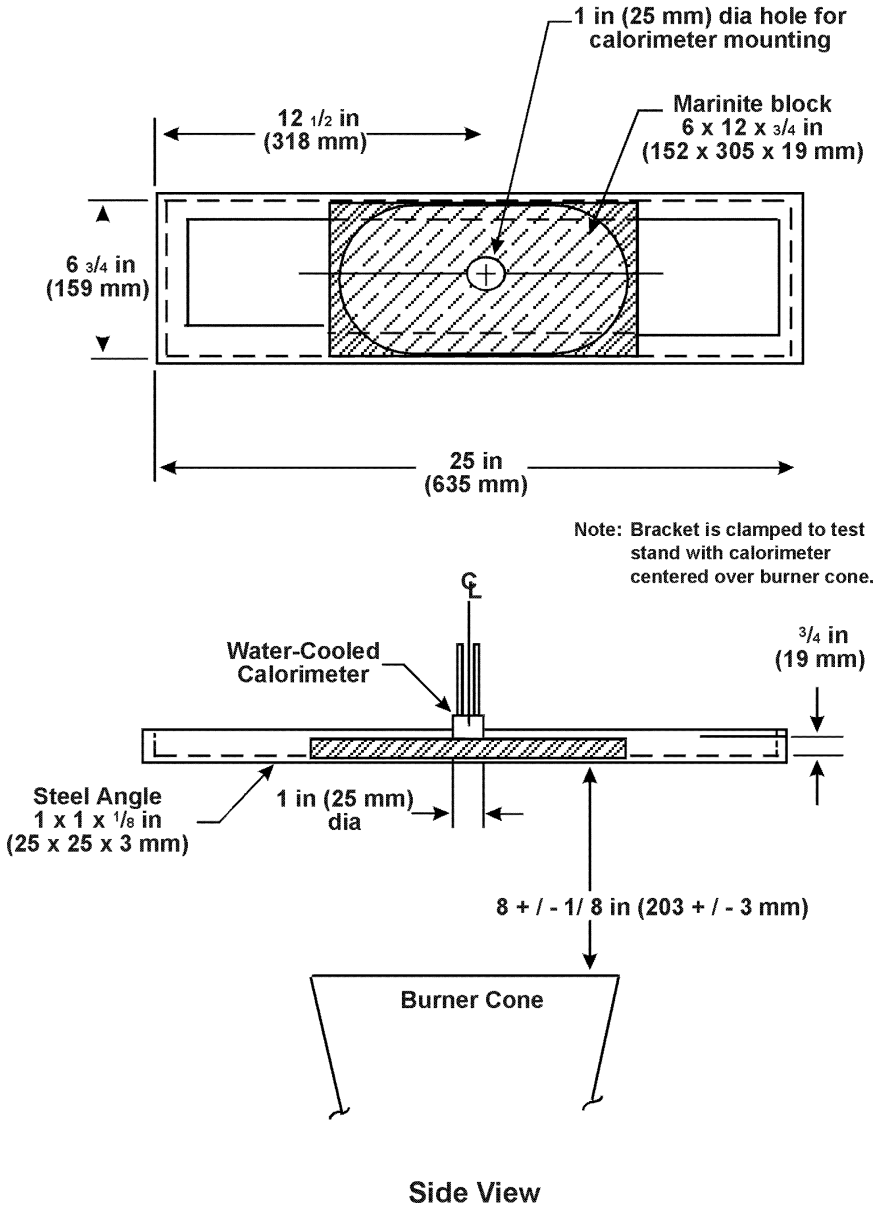

[72 FR 55099, Sept. 28, 2007, as amended at 78 FR 15328, Mar. 11, 2013]

PART 179—SPECIFICATIONS FOR TANK CARS

Subpart A—Introduction, Approvals and Reports

Sec.
179.1 General.
179.2 Definitions and abbreviations.
179.3 Procedure for securing approval.
179.4 Changes in specifications for tank cars.
179.5 Certificate of construction.
179.6 Repairs and alterations.
179.7 Quality assurance program.
179.8 Limitation on actions by states, local governments, and Indian tribes.

Subpart B—General Design Requirements

179.10 Tank mounting.
179.11 Welding certification.
179.12 Interior heater systems.
179.13 Tank car capacity and gross weight limitation.
179.14 Coupler vertical restraint system.
179.15 Pressure relief devices.
179.16 Tank-head puncture-resistance systems.
179.18 Thermal protection systems.
179.20 Service equipment; protection systems.
179.22 Marking.
179.24 Stamping.

Subpart C—Specifications for Pressure Tank Car Tanks (Classes DOT-105, 109, 112, 114, and 120)

179.100 General specifications applicable to pressure tank car tanks.
179.100–1 Tanks built under these specifications shall comply with the requirements of §§ 179.100, 179.101 and when applicable, §§ 179.102 and 179.103.
179.100–3 Type.
179.100–4 Insulation.
179.100–6 Thickness of plates.
179.100–7 Materials.
179.100–8 Tank heads.
179.100–9 Welding.
179.100–10 Postweld heat treatment.
179.100–12 Manway nozzle, cover and protective housing.
179.100–13 Venting, loading and unloading valves, measuring and sampling devices.
179.100–14 Bottom outlets.
179.100–16 Attachments.
179.100–17 Closures for openings.
179.100–18 Tests of tanks.
179.100–19 Tests of safety relief valves.
179.100–20 Stamping.
179.101 Individual specification requirements applicable to pressure tank car tanks.
179.101–1 Individual specification requirements.
179.102 Special commodity requirements for pressure tank car tanks.
179.102–1 Carbon dioxide, refrigerated liquid.
179.102–2 Chlorine.
179.102–3 Materials poisonous by inhalation.
179.102–4 Vinyl fluoride, stabilized.
179.102–17 Hydrogen chloride, refrigerated liquid.
179.103 Special requirements for class 114A * * * tank car tanks.
179.103–1 Type.
179.103–2 Manway cover.
179.103–3 Venting, loading and unloading valves, measuring and sampling devices.
179.103–4 Safety relief devices and pressure regulators.
179.103–5 Bottom outlets.

Subpart D—Specifications for Nonpressure Tank Car Tanks (Classes DOT-111AW and 115AW)

179.200 General specifications applicable to non-pressure tank car tanks (Class DOT 111).
179.200–1 Tank built under these specifications must meet the requirements of §§ 179.200, and 179.201.
179.200–3 Type.
179.200–4 Insulation.
179.200–6 Thickness of plates.
179.200–7 Materials.
179.200–8 Tank heads.
179.200–9 Compartment tanks.
179.200–10 Welding.
179.200–11 Postweld heat treatment.
179.200–13 Manway ring or flange, pressure relief device flange, bottom outlet nozzle flange, bottom washout nozzle flange and other attachments and openings.
179.200–14 Expansion capacity.
179.200–15 Closures for manways.
179.200–16 Gauging devices, top loading and unloading devices, venting and air inlet devices.
179.200–17 Bottom outlets.
179.200–19 Reinforcements, when used, and appurtenances not otherwise specified.
179.200–21 Closures for openings.
179.200–22 Test of tanks.
179.200–23 Tests of pressure relief valves.
179.200–24 Stamping.
179.201 Individual specification requirements applicable to non-pressure tank car tanks.
179.201–1 Individual specification requirements.
179.201–2 [Reserved]
179.201–3 Lined tanks.
179.201–4 Material.
179.201–5 Postweld heat treatment and corrosion resistance.

179.201–6 Manways and manway closures.
179.201–8 Sampling device and thermometer well.
179.201–9 Gauging device.
179.201–10 Water capacity marking.
179.201–11 Insulation.
179.202—179.202–22 [Reserved]
179.220 General specifications applicable to nonpressure tank car tanks consisting of an inner container supported within an outer shell (class DOT-115).
179.220–1 Tanks built under these specifications must meet the requirements of §§ 179.220 and 179.221.
179.220–3 Type.
179.220–4 Insulation.
179.220–6 Thickness of plates.
179.220–7 Materials.
179.220–8 Tank heads.
179.220–9 Compartment tanks.
179.220–10 Welding.
179.220–11 Postweld heat treatment.
179.220–13 Inner container manway nozzle and cover.
179.220–14 Openings in the tanks.
179.220–15 Support system for inner container.
179.220–16 Expansion capacity.
179.220–17 Gauging devices, top loading and unloading devices, venting and air inlet devices.
179.220–18 Bottom outlets.
179.220–20 Reinforcements, when used, and appurtenances not otherwise specified.
179.220–22 Closure for openings.
179.220–23 Test of tanks.
179.220–24 Tests of pressure relief valves.
179.220–25 Stamping.
179.220–26 Stenciling.
179.221 Individual specification requirements applicable to tank car tanks consisting of an inner container supported within an outer shell.
179.221–1 Individual specification requirements.

Subpart E—Specifications for Multi-Unit Tank Car Tanks (Classes DOT-106A and 110AW)

179.300 General specifications applicable to multi-unit tank car tanks designed to be removed from car structure for filling and emptying (Classes DOT-106A and 110AW).
179.300–1 Tanks built under these specifications shall meet the requirements of §§ 179.300 and 179.301.
179.300–3 Type and general requirements.
179.300–4 Insulation.
179.300–6 Thickness of plates.
179.300–7 Materials.
179.300–8 Tank heads.
179.300–9 Welding.
179.300–10 Postweld heat treatment.
179.300–12 Protection of fittings.
179.300–13 Venting, loading and unloading valves.
179.300–14 Attachments not otherwise specified.
179.300–15 Pressure relief devices.
179.300–16 Tests of tanks.
179.300–17 Tests of pressure relief devices.
179.300–18 Stamping.
179.300–19 Inspection.
179.300–20 Reports.
179.301 Individual specification requirements for multi-unit tank car tanks.
179.302 [Reserved]

Subpart F—Specification for Cryogenic Liquid Tank Car Tanks and Seamless Steel Tanks (Classes DOT-113 and 107A)

179.400 General specification applicable to cryogenic liquid tank car tanks.
179.400–1 General.
179.400–3 Type.
179.400–4 Insulation system and performance standard.
179.400–5 Materials.
179.400–6 Bursting and buckling pressure.
179.400–7 Tank heads.
179.400–8 Thickness of plates.
179.400–9 Stiffening rings.
179.400–10 Sump or siphon bowl.
179.400–11 Welding.
179.400–12 Postweld heat treatment.
179.400–13 Support system for inner tank.
179.400–14 Cleaning of inner tank.
179.400–15 Radioscopy.
179.400–16 Access to inner tank.
179.400–17 Inner tank piping.
179.400–18 Test of inner tank.
179.400–19 Valves and gages.
179.400–20 Pressure relief devices.
179.400–21 Test of pressure relief valves.
179.400–22 Protective housings.
179.400–23 Operating instructions.
179.400–24 Stamping.
179.400–25 Stenciling.
179.401 Individual specification requirements applicable to inner tanks for cryogenic liquid tank car tanks.
179.401–1 Individual specification requirements.
179.500 Specification DOT-107A * * * *, seamless steel tank car tanks.
179.500–1 Tanks built under these specifications shall meet the requirements of § 179.500.
179.500–3 Type and general requirements.
179.500–4 Thickness of wall.
179.500–5 Material.
179.500–6 Heat treatment.
179.500–7 Physical tests.
179.500–8 Openings in tanks.
179.500–10 Protective housing.
179.500–11 Loading and unloading valves.
179.500–12 Pressure relief devices.
179.500–13 Fixtures.
179.500–14 Test of tanks.
179.500–15 Handling of tanks failing in tests.

179.500–16 Tests of pressure relief devices.
179.500–17 Marking.
179.500–18 Inspection and reports.
APPENDIX A TO PART 179—PROCEDURES FOR TANK-HEAD PUNCTURE-RESISTANCE TEST
APPENDIX B TO PART 179—PROCEDURES FOR SIMULATED POOL AND TORCH-FIRE TESTING

AUTHORITY: 49 U.S.C. 5101–5128; 49 CFR 1.81 and 1.97.

SOURCE: 29 FR 18995, Dec. 29, 1964, unless otherwise noted. Redesignated at 32 FR 5606, Apr. 5, 1967.

Subpart A—Introduction, Approvals and Reports

§ 179.1 General.

(a) This part prescribes the specifications for tanks that are to be mounted on or form part of a tank car and which are to be marked with a DOT specification.

(b) Except as provided in paragraph (c) of this section, tanks to which this part is applicable, must be built to the specifications prescribed in this part.

(c) Tanks built to specifications predating those in this part may continue in use as provided in § 180.507 of this subchapter.

(d) Any person who performs a function prescribed in this part, shall perform that function in accordance with this part.

(e) When this part requires a tank to be marked with a DOT specification (for example, DOT-105A100W), compliance with that requirement is the responsibility of the tank builder. Marking the tank with the DOT specification shall be understood to certify compliance by the builder that the functions performed by the builder, as prescribed in this part, have been performed in compliance with this part.

(f) The tank builder should inform each person to whom that tank is transferred of any specification requirements which have not been met at time of transfer.

[Amdt. 179–17, 41 FR 38183, Sept. 9, 1976, as amended by Amdt. 179–50, 60 FR 49076, Sept. 21, 1995; 68 FR 48571, Aug. 14, 2003]

§ 179.2 Definitions and abbreviations.

(a) The following apply in part 179:

(1) *AAR* means Association of American Railroads.

(2) *Approved* means approval by the AAR Tank Car Committee.

(3) *ASTM* means American Society for Testing and Materials.

(4) [Reserved]

(5) Definitions in part 173 of this chapter also apply.

(6) *F* means degrees Fahrenheit.

(7) *NGT* means National Gas Taper Threads.

(8) *NPT* means an American Standard Taper Pipe Thread conforming to the requirements of NBS Handbook H–28 (IBR, see § 171.7 of this subchapter).

(9) [Reserved]

(10) *Tank car facility* means an entity that manufactures, repairs, inspects, tests, qualifies, or maintains a tank car to ensure that the tank car conforms to this part and subpart F of part 180 of this subchapter, that alters the certificate of construction of the tank car, that ensures the continuing qualification of a tank car by performing a function prescribed in parts 179 or 180 of this subchapter, or that makes any representation indicating compliance with one or more of the requirements of parts 179 or 180 of this subchapter.

(11) *Tanks* means tank car tanks.

(b) [Reserved]

[29 FR 18995, Dec. 20, 1964. Redesignated at 32 FR 5606, Apr. 5, 1967, and amended by Amdt. 179–10, 36 FR 21344, Nov. 6, 1971; Amdt. 179–50, 60 FR 49076, Sept. 21, 1995; Amdt. 179–50, 61 FR 33255, June 26, 1996; 63 FR 52850, Oct. 1, 1998; 66 FR 45186, 45390, Aug. 28, 2001; 68 fR 75759, Dec. 31, 2003]

§ 179.3 Procedure for securing approval.

(a) Application for approval of designs, materials and construction, conversion or alteration of tank car tanks under these specifications, complete with detailed prints, must be submitted in prescribed form to the Executive Director—Tank Car Safety, AAR, for consideration by its Tank Car Committee and other appropriate committees. Approval or rejections of applications based on appropriate committee action will be issued by the executive director.

(b) When, in the opinion of the Committee, such tanks or equipment are in compliance with the requirements of this subchapter, the application will be approved.

(c) When such tanks or equipment are not in compliance with the requirements of this subchapter, the Committee may recommend service trials to determine the merits of a change in specifications. Such service trials may be conducted only if the builder or shipper applies for and obtains a special permit.

[29 FR 18995, Dec. 29, 1964. Redesignated at 32 FR 5606, Apr. 5, 1967 and amended by Amdt. 179–41, 52 FR 36672, Sept. 30, 1987; 63 FR 52850, Oct. 1, 1998; 68 FR 48571, Aug. 14, 2003; 70 FR 73166, Dec. 9, 2005]

§ 179.4 Changes in specifications for tank cars.

(a) Proposed changes in or additions to specifications for tanks must be submitted to the Executive Director—Tank Car Safety, AAR, for consideration by its Tank Car Committee. An application for construction of tanks to any new specification may be submitted with proposed specification. Construction should not be started until the specification has been approved or a special permit has been issued. When proposing a new specification, the applicant shall furnish information to justify a new specification. This data should include the properties of the lading and the method of loading and unloading.

(b) The Tank Car Committee will review the proposed specifications at its earliest convenience and report its recommendations through the Executive Director—Tank Car Safety to the Department. The recommendation will be considered by the Department in determining appropriate action.

[29 FR 18995, Dec. 29, 1964. Redesignated at 32 FR 5606, Apr. 5, 1967 and amended by Amdt. 179–41, 52 FR 36672, Sept. 30, 1987; 63 FR 52850, Oct. 1, 1998; 70 FR 73166, Dec. 9, 2005]

§ 179.5 Certificate of construction.

(a) Before a tank car is placed in service, the party assembling the completed car shall furnish a Certificate of Construction, Form AAR 4–2 to the owner and the Executive Director—Tank Car Safety, AAR, certifying that the tank, equipment, and car fully conforms to all requirements of the specification.

(b) When cars or tanks are covered in one application and are identical in all details are built in series, one certificate will suffice for each series when submitted to the Executive Director—Tank Car Safety, AAR.

(c) If the owner elects to furnish service equipment, the owner shall furnish the Executive Director—Tank Car Safety, AAR, a report in prescribed form, certifying that the service equipment complies with all the requirements of the specifications.

(d) When cars or tanks which are covered on one application and are identical in all details are built in series, one certificate shall suffice for each series when submitted to the Executive Director—Tank Car Safety, AAR. One copy of the Certificate of Construction must be furnished to the Executive Director—Tank Car Safety, AAR for each car number of consecutively numbered group or groups covered by the original application.

[Amdt. 179–10, 36 FR 21344, Nov. 6, 1971, as amended at 63 FR 52850, Oct. 1, 1998; 68 FR 48571, Aug. 14, 2003]

§ 179.6 Repairs and alterations.

For procedure to be followed in making repairs or alterations, see appendix R of the AAR Specifications for Tank Cars (IBR, see § 171.7 of this subchapter).

[68 FR 75759, Dec. 31, 2003]

§ 179.7 Quality assurance program.

(a) At a minimum, each tank car facility shall have a quality assurance program, approved by AAR, that—

(1) Ensures the finished product conforms to the requirements of the applicable specification and regulations of this subchapter;

(2) Has the means to detect any nonconformity in the manufacturing, repair, inspection, testing, and qualification or maintenance program of the tank car; and

(3) Prevents non-conformities from recurring.

(b) At a minimum, the quality assurance program must have the following elements

(1) Statement of authority and responsibility for those persons in charge of the quality assurance program.

(2) An organizational chart showing the interrelationship between managers, engineers, purchasing, construction, inspection, testing, and quality control personnel.

(3) Procedures to ensure that the latest applicable drawings, design calculations, specifications, and instructions are used in manufacture, inspection, testing, and repair.

(4) Procedures to ensure that the fabrication and construction materials received are properly identified and documented.

(5) A description of the manufacturing, repair, inspection, testing, and qualification or maintenance program, including the acceptance criteria, so that an inspector can identify the characteristics of the tank car and the elements to inspect, examine, and test at each point.

(6) Monitoring and control of processes and product characteristics during production.

(7) Procedures for correction of nonconformities.

(8) Provisions indicating that the requirements of the AAR Specifications for Tank Cars (IBR, see § 171.7 of this subchapter), apply.

(9) Qualification requirements of personnel performing non-destructive inspections and tests.

(10) Procedures for evaluating the inspection and test technique employed, including the accessibility of the area and the sensitivity and reliability of the inspection and test technique and minimum detectable crack length.

(11) Procedures for the periodic calibration and measurement of inspection and test equipment.

(12) A system for the maintenance of records, inspections, tests, and the interpretation of inspection and test results.

(c) Each tank car facility shall ensure that only personnel qualified for each non-destructive inspection and test perform that particular operation.

(d) Each tank car facility shall provide written procedures to its employees to ensure that the work on the tank car conforms to the specification, AAR approval, and owner's acceptance criteria.

(e) Each tank car facility shall train its employees in accordance with subpart H of part 172 of this subchapter on the program and procedures specified in paragraph (b) of this section to ensure quality.

(f) No tank car facility may manufacture, repair, inspect, test, qualify or maintain tank cars subject to requirements of this subchapter, unless it is operating in conformance with a quality assurance program and written procedures required by paragraphs (a) and (b) of this section.

[Amdt. 179–50, 60 FR 49076, Sept. 21, 1995, as amended by Amdt. 179–50, 61 FR 33255, June 26, 1996; 68 FR 48571, Aug. 14, 2003; 68 FR 75759, Dec. 31, 2003]

§ 179.8 Limitation on actions by states, local governments, and Indian tribes.

Sections 5125 and 20106 of Title 49, United States Code, limit the authority of states, political subdivisions of states, and Indian tribes to impose requirements on the transportation of hazardous materials in commerce. A state, local, or Indian tribe requirement on the transportation of hazardous materials by rail may be preempted under either 49 U.S.C. 5125 or 20106, or both.

(a) Section 171.1(f) of this subchapter describes the circumstances under which 49 U.S.C. 5125 preempts a requirement of a state, political subdivision of a state, or Indian tribe.

(b) Under the Federal Railroad Safety Act (49 U.S.C. 20106), administered by the Federal Railroad Administration (see 49 CFR parts 200–244), laws, regulations and orders related to railroad safety, including security, shall be nationally uniform to the extent practicable. A state may adopt, or continue in force, a law, regulation, or order covering the same subject matter as a DOT regulation or order applicable to railroad safety and security (including the requirements in this subpart) only when an additional or more stringent state law, regulation, or order is necessary to eliminate or reduce an essentially local safety or security hazard; is not incompatible with a law, regulation, or order of the United States Government; and does not unreasonably burden interstate commerce.

[74 FR 1801, Jan. 13, 2009]

Subpart B—General Design Requirements

§ 179.10 Tank mounting.

(a) The manner in which tanks are attached to the car structure shall be approved. The use of rivets to secure anchors to tanks prohibited.

(b) [Reserved]

§ 179.11 Welding certification.

(a) Welding procedures, welders and fabricators shall be approved.

(b) [Reserved]

§ 179.12 Interior heater systems.

(a) Interior heater systems shall be of approved design and materials. If a tank is divided into compartments, a separate system shall be provided for each compartment.

(b) Each interior heater system shall be hydrostatically tested at not less than 13.79 bar (200 psig) and shall hold the pressure for 10 minutes without leakage or evidence of distress.

[Amdt. 179–52, 61 FR 28678, June 5, 1996, as amended by 66 FR 45390, Aug. 28, 2001]

§ 179.13 Tank car capacity and gross weight limitation.

Except as provided in this section, tank cars, built after November 30, 1970, or any existing tank cars that are converted, may not exceed 34,500 gallons (130,597 L) capacity or 263,000 pounds (119,295 kg) gross weight on rail.

(a) For other than tank cars containing poisonous-by-inhalation material, a tank car may be loaded to a gross weight on rail of up to 286,000 pounds (129,727 kg) upon approval by the Associate Administrator for Safety, Federal Railroad Administration (FRA). Tank cars must conform to the conditions of the approval and must be operated only under controlled interchange conditions agreed to by participating railroads.

(b) Tank cars containing poisonous-by-inhalation material meeting the applicable authorized tank car specifications listed in § 173.244(a)(2) or (3), or § 173.314(c) or (d) may have a gross weight on rail of up to 286,000 pounds upon approval by the Associate Administrator for Railroad Safety, FRA. Tank cars exceeding 263,000 pounds and up to 286,000 pounds gross weight on rail must meet the requirements of AAR Standard S–286, Free/Unrestricted Interchange for 286,000 lb Gross Rail Load Cars (IBR, see § 171.7 of this subchapter). Any increase in weight above 263,000 pounds may not be used to increase the quantity of the contents of the tank car.

[74 FR 1802, Jan. 13, 2009, as amended at 75 FR 27216, May 14, 2010; 77 FR 37985, June 25, 2012]

§ 179.14 Coupler vertical restraint system.

(a) *Performance standard.* Each tank car shall be equipped with couplers capable of sustaining, without disengagement or material failure, vertical loads of at least 200,000 pounds (90,718.5 kg) applied in upward and downward directions in combination with buff loads of 2,000 pounds (907.2 kg), when coupled to cars which may or may not be equipped with couplers having this vertical restraint capability.

(b) *Test verification.* Except as provided in paragraph (d) of this section, compliance with the requirements of paragraph (a) of this section shall be achieved by verification testing of the coupler vertical restraint system in accordance with paragraph (c) of this section.

(c) *Coupler vertical restraint tests.* A coupler vertical restraint system shall be tested under the following conditions:

(1) The test coupler shall be tested with a mating coupler (or simulated coupler) having only frictional vertical force resistance at the mating interface; or a mating coupler (or simulated coupler) having the capabilities described in paragraph (a) of this section;

(2) The testing apparatus shall simulate the vertical coupler performance at the mating interface and may not interfere with coupler failure or otherwise inhibit failure due to force applications and reactions; and

(3) The test shall be conducted as follows:

(i) A minimum of 200,000 pounds (90,718.5 kg) vertical downward load shall be applied continuously for at least 5 minutes to the test coupler head simultaneously with the application of

a nominal 2,000 pounds (907.2 kg) buff load;

(ii) The procedures prescribed in paragraph (c)(3)(i) of this section, shall be repeated with a minimum vertical upward load of 200,000 pounds (90,718.5 kg); and

(iii) A minimum of three consecutive successful tests shall be performed for each load combination prescribed in paragraphs (c)(3) (i) and (ii) of this section. A test is successful when a vertical disengagement or material failure does not occur during the application of any of the loads prescribed in this paragraph.

(d) *Authorized couplers*. As an alternative to the test verifications in paragraph (c) of this section, the following couplers are authorized:

(1) E double shelf couplers designated by the Association of American Railroads' Catalog Nos., SE60CHT, SE60CC, SE60CHTE, SE60CE, SE60DC, SE60DE, SE67CC, SE67CE, SE67BHT, SE67BC, SE67BHTE, SE67BE, SE68BHT, SE68BC, SE68BHTE, SE68BE, SE69AHTE, and SE69AE.

(2) F double shelf couplers designated by the Association of American Railroads' Catalog Nos., SF70CHT, SF70CC, SF70CHTE, SF70CE, SF73AC, SF73AE, SF73AHT, SF73AHTE, SF79CHT, SF79CC, SF79CHTE, and SF79CE.

[Amdt. 179–42, 54 FR 38797, Sept. 20, 1989]

§ 179.15 Pressure relief devices.

Except for DOT Class 106, 107, 110, and 113 tank cars, tanks must have a pressure relief device, made of material compatible with the lading, that conforms to the following requirements:

(a) *Performance standard*. Each tank must have a pressure relief device, made of materials compatible with the lading, having sufficient flow capacity to prevent pressure build-up in the tank to no more than the flow rating pressure of the pressure relief device in fire conditions as defined in appendix A of the AAR Specifications for Tank Cars (IBR, see §171.7 of this subchapter).

(b) *Settings for reclosing pressure relief devices*. (1) Except as provided in paragraph (b)(2) of this section, a reclosing pressure relief valve must have a minimum start-to-discharge pressure equal to the sum of the static head and gas padding pressure and the lading vapor pressure at the following reference temperatures:

(i) 46 °C (115 °F) for noninsulated tanks;

(ii) 43 °C (110 °F) for tanks having a thermal protection system incorporating a metal jacket that provides an overall thermal conductance at 15.5 °C (60 °F) of no more than 10.22 kilojoules per hour per square meter per degree Celsius (0.5 Btu per hour/per square foot/per degree F) temperature differential; and

(iii) 41 °C (105 °F) for insulated tanks.

(2)(i) The start-to-discharge pressure of a pressure relief device may not be lower than 5.17 Bar (75 psig) or exceed 33 percent of the minimum tank burst pressure.

(ii) Tanks built prior to October 1, 1997 having a minimum tank burst pressure of 34.47 Bar (500 psig) or less may be equipped with a reclosing pressure relief valve having a start-to-discharge pressure of not less than 14.5 percent of the minimum tank burst pressure but no more than 33 percent of the minimum tank burst pressure.

(3) The vapor tight pressure of a reclosing pressure relief valve must be at least 80 percent of the start-to-discharge pressure.

(4) The flow rating pressure must be 110 percent of the start-to-discharge pressure for tanks having a minimum tank burst pressure greater than 34.47 Bar (500 psig) and from 110 percent to 130 percent for tanks having a minimum tank burst pressure less than or equal to 34.47 Bar (500 psig).

(5) The tolerance for a reclosing pressure relief valve is ±3 psi for valves with a start-to-discharge pressure of 6.89 Bar (100 psig) or less and ±3 percent for valves with a start-to-discharge pressure greater than 6.89 Bar (100 psig).

(c) *Flow capacity of pressure relief devices*. The total flow capacity of each reclosing and nonreclosing pressure relief device must conform to appendix A of the AAR Specifications for Tank Cars.

(d) *Flow capacity tests*. The manufacturer of any reclosing or nonreclosing pressure relief device must design and

test the device in accordance with appendix A of the AAR Specifications for Tank Cars.

(e) *Combination pressure relief systems.* A non-reclosing pressure relief device may be used in series with a reclosing pressure relief valve. The pressure relief valve must be located outboard of the non-reclosing pressure relief device.

(1) When a breaking pin device is used in combination with a reclosing pressure relief valve, the breaking pin must be designed to fail at the start-to-discharge pressure specified in paragraph (b) of this section, and the reclosing pressure relief valve must be designed to discharge at not greater than 95 percent of the start-to-discharge pressure.

(2) When a rupture disc is used in combination with a reclosing pressure relief valve, the rupture disc must be designed to burst at the pressure specified in paragraph (b) of this section, and the reclosing pressure relief valve must be designed to discharge at not greater than 95 percent of the pressure. A device must be installed to detect any accumulation of pressure between the rupture disc and the reclosing pressure relief valve. The detection device must be a needle valve, trycock, or tell-tale indicator. The detection device must be closed during transportation.

(3) The vapor tight pressure and the start-to-discharge tolerance is based on the discharge setting of the reclosing pressure relief device.

(f) *Nonreclosing pressure relief device.* In addition to paragraphs (a), (b)(4), (c), and (d) of this section, a nonreclosing pressure relief device must conform to the following requirements:

(1) A non-reclosing pressure relief device must incorporate a rupture disc designed to burst at a pressure equal to the greater of 100% of the tank test pressure, or 33% of the tank burst pressure.

(2) The approach channel and the discharge channel may not reduce the required minimum flow capacity of the pressure relief device.

(3) The non-reclosing pressure relief device must be designed to prevent interchange with other fittings installed on the tank car, must have a structure that encloses and clamps the rupture disc in position (preventing any distortion or damage to the rupture disc when properly applied), and must have a cover, with suitable means of preventing misplacement, designed to direct any discharge of the lading downward.

(4) The non-reclosing pressure relief device must be closed with a rupture disc that is compatible with the lading and manufactured in accordance with Appendix A of the AAR Specifications for Tank Cars. The tolerance for a rupture disc is +0 to −15 percent of the burst pressure marked on the disc.

(g) *Location of relief devices.* Each pressure relief device must communicate with the vapor space above the lading as near as practicable on the longitudinal center line and center of the tank.

(h) *Marking of pressure relief devices.* Each pressure relief device and rupture disc must be permanently marked in accordance with the appendix A of the AAR Specifications for Tank Cars.

[Amdt. 179–52, 61 FR 28678, June 5, 1996, as amended by Amdt. 179–52, 61 FR 50255, Sept. 25, 1996; 62 FR 51561, Oct. 1, 1997; 64 FR 51919, Sept. 27, 1999; 66 FR 45390, Aug. 28, 2001; 68 FR 75759, Dec. 31, 2003]

§ 179.16 Tank-head puncture-resistance systems.

(a) *Performance standard.* When the regulations in this subchapter require a tank-head puncture-resistance system, the system shall be capable of sustaining, without any loss of lading, coupler-to-tank-head impacts at relative car speeds of 29 km/hour (18 mph) when:

(1) The weight of the impact car is at least 119,295 kg (263,000 pounds);

(2) The impacted tank car is coupled to one or more backup cars that have a total weight of at least 217,724 kg (480,000 pounds) and the hand brake is applied on the last ''backup'' car; and

(3) The impacted tank car is pressurized to at least 6.9 Bar (100 psig).

(b) *Verification by testing.* Compliance with the requirements of paragraph (a) of this section shall be verified by full-scale testing according to appendix A of this part.

(c) *Alternative compliance by other than testing.* As an alternative to requirements prescribed in paragraph (b) of this section, compliance with the requirements of paragraph (a) of this section may be met by installing full-head protection (shields) or full tank-head jackets on each end of the tank car conforming to the following:

(1) The full-head protection (shields) or full tank-head jackets must be at least 1.27 cm (0.5 inch) thick, shaped to the contour of the tank head and made from steel having a tensile strength greater than 379.21 N/mm^2 (55,000 psi).

(2) The design and test requirements of the full-head protection (shields) or full tank-head jackets must meet the impact test requirements in Section 5.3 of the AAR Specifications for Tank Cars (IBR, see §171.7 of this subchapter).

(3) The workmanship must meet the requirements in Section C, Part II, Chapter 5, of the AAR Specifications for Design, Fabrication, and Construction of Freight Cars (IBR, see §171.7 of this subchapter).

[Amdt. 179–50, 60 FR 49077, Sept. 21, 1995, as amended by Amdt. 179–50, 61 FR 33255, June 26, 1996; 66 FR 45390, Aug. 28, 2001; 68 FR 75759, Dec. 31, 2003]

§ 179.18 Thermal protection systems.

(a) *Performance standard.* When the regulations in this subchapter require thermal protection on a tank car, the tank car must have sufficient thermal resistance so that there will be no release of any lading within the tank car, except release through the pressure release device, when subjected to:

(1) A pool fire for 100 minutes; and

(2) A torch fire for 30 minutes.

(b) *Thermal analysis.* (1) Compliance with the requirements of paragraph (a) of this section shall be verified by analyzing the fire effects on the entire surface of the tank car. The analysis must consider the fire effects on and heat flux through tank discontinuities, protective housings, underframes, metal jackets, insulation, and thermal protection. A complete record of each analysis shall be made, retained, and upon request, made available for inspection and copying by an authorized representative of the Department. The procedures outlined in ''Temperatures, Pressures, and Liquid Levels of Tank Cars Engulfed in Fires,'' DOT/FRA/OR&D–84/08.11, (1984), Federal Railroad Administration, Washington, DC (available from the National Technical Information Service, Springfield, VA) shall be deemed acceptable for analyzing the fire effects on the entire surface of the tank car.

(2) When the analysis shows the thermal resistance of the tank car does not conform to paragraph (a) of this section, the thermal resistance of the tank car must be increased by using a system listed by the Department under paragraph (c) of this section or by testing a new or untried system and verifying it according to appendix B of this part.

(c) *Systems that no longer require test verification.* The Department maintains a list of thermal protection systems that comply with the requirements of appendix B of this part and that no longer require test verification. Information necessary to equip tank cars with one of these systems is available in the PHMSA Records Center, Pipeline and Hazardous Materials Safety Administration, East Building, 1200 New Jersey Avenue, SE., Washington, DC 20590–0001.

[Amdt. 179–50, 60 FR 49077, Sept. 21, 1995, as amended by Amdt. 179–50, 61 FR 33256, June 26, 1996; 66 FR 45390, Aug. 28, 2001; 70 FR 56099, Sept. 23, 2005; 72 FR 55696, Oct. 1, 2007]

§ 179.20 Service equipment; protection systems.

If an applicable tank car specification authorizes location of filling or discharge connections in the bottom shell, the connections must be designed, constructed, and protected according to paragraphs E9.00 and E10.00 of the AAR Specifications for Tank Cars (IBR, see §171.7 of this subchapter).

[68 FR 75759, Dec. 31, 2003]

§ 179.22 Marking.

In addition to any other marking requirement in this subchapter, the following marking requirements apply:

(a) Each tank car must be marked according to the requirements in appendix C of the AAR Specifications for Tank Cars (IBR, see §171.7 of this subchapter).

(b) Each tank car that requires a tank-head puncture-resistance system must have the letter ''S'' substituted for the letter ''A'' in the specification marking.

(c) Each tank car that requires a tank-head puncture-resistance system, a thermal protection system, and a metal jacket must have the letter ''J'' substituted for the letter ''A'' or ''S'' in the specification marking.

(d) Each tank car that requires a tank-head puncture-resistance system, a thermal protection system, and no metal jacket must have the letter ''T'' substituted for the letter ''A'' or ''S'' in the specification marking.

(e) Each tank car manufactured after March 16, 2009 to meet the requirements of §173.244(a)(2) or (3) or §173.314(c) or (d) shall be marked with the letter ''I'' following the test pressure instead of the letter ''W''. (Example: DOT 105J600I).

[Amdt. 179–50, 60 FR 49077, Sept. 21, 1995, as amended by Amdt. 179–50, 61 FR 33256, June 26, 1996; 68 FR 75759, Dec. 31, 2003; 74 FR 1802, Jan. 13, 2009]

§ 179.24 Stamping.

(a)(1) After July 25, 2012, to certify compliance with federal requirements, the tank manufacturer must install two identical permanent identification plates, one located on both inboard surfaces of the body bolsters of the tank car. One identification plate must be installed on the right side (AR) of the tank car, and the other must be installed on the back end left side (BL) body bolster webs so that each plate is readily accessible for inspection. The plates must be at least 3/32 inch thick and manufactured from corrosion resistant metal. When the tank jacket (flashing) covers the body bolster web and identification plates, additional identical plates must be installed on the AR and BL corners of the tank in a visible location. Tank cars built before July 25, 2012, may have the plate instead of or in addition to the stamping.

(2) Each plate must be stamped, embossed, or otherwise marked by an equally durable method in letters 3/16 inch high with the following information (parenthetical abbreviations may be used, and the AAR form reference is to the applicable provisions of the AAR Specifications for Tank Cars, December 2000 edition (IBR, see §171.7 of this subchapter)):

(i) *Tank Manufacturer (Tank MFG):* Full name of the car builder as shown on the certificate of construction (AAR form 4–2).

(ii) *Tank Manufacturer's Serial Number (SERIAL NO):* For the specific car.

(iii) *AAR Number (AAR NO):* The AAR number from line 3 of AAR Form 4–2.

(iv) *Tank Specification (SPECIFICATION):* The specification to which the tank was built from line 7 of AAR form 4–2.

(v) *Tank Shell Material/Head Material (SHELL MATL/HEAD MATL):* ASTM or AAR specification of the material used in the construction of the tank shell and heads from lines 15 and 16 of AAR Form 4–2. For Class DOT–113W, DOT–115W, AAR–204W, and AAR–206W, the materials used in the construction of the outer tank shell and heads must be listed. Only list the alloy (e.g., 5154) for aluminum tanks and the type (e.g., 304L or 316L) for stainless steel tanks.

(vi) *Insulation Material (INSULATION MATL):* Generic names of the first and second layer of any thermal protection/insulation material applied.

(vii) *Insulation Thickness (INSULATION THICKNESS):* In inches.

(viii) *Underframe/Stub Sill Type (UF/SS DESIGN):* The design from Line 32 of AAR Form 4–2.

(ix) *Date of Manufacture (DATE OF MFR):* The month and year of tank manufacture. If the underframe has a different built date than the tank, show both dates.

(3) When a modification to the tank changes any of the information shown in paragraph (a)(2) of this section, the car owner or the tank car facility making the modification must install an additional variable identification plate on the tank in accordance with paragraph (a)(1) of this section showing the following information:

(i) *AAR Number (AAR NO):* The AAR number from line 3 of AAR Form 4–2 for the alteration or conversion.

(ii) All items of paragraph (a)(2) of this section that were modified, followed by the month and year of modification.

(b) [Reserved].

[77 FR 37985, June 25, 2012]

Subpart C—Specifications for Pressure Tank Car Tanks (Classes DOT-105, 109, 112, 114 and 120)

§ 179.100 General specifications applicable to pressure tank car tanks.

§ 179.100–1 Tanks built under these specifications shall comply with the requirements of §§ 179.100, 179.101 and when applicable, §§ 179.102 and 179.103.

§ 179.100–3 Type.

(a) Tanks built under this specification shall be fusion-welded with heads designed convex outward. Except as provided in § 179.103 they shall be circular in cross section, shall be provided with a manway nozzle on top of the tank of sufficient size to permit access to the interior, a manway cover to provide for the mounting of all valves, measuring and sampling devices, and a protective housing. Other openings in the tank are prohibited, except as provided in part 173 of this chapter, §§ 179.100–14, 179.101–1, 179.102 or § 179.103.

(b) Head shields and shells of tanks built under this specification must be normalized. Tank car heads must be normalized after forming unless specific approval is granted for a facility's equipment and controls.

[29 FR 18995, Dec. 29, 1964. Redesignated at 32 FR 5606, Apr. 5, 1967, and amended by Amdt. 179–10, 36 FR 21344, Nov. 6, 1971; 65 FR 58632, Sept. 29, 2000; 74 FR 1802, Jan. 13, 2009]

§ 179.100–4 Insulation.

(a) If insulation is applied, the tank shell and manway nozzle must be insulated with an approved material. The entire insulation must be covered with a metal jacket of a thickness not less than 11 gauge (0.1196 inch) nominal (Manufacturers' Standard Gauge) and flashed around all openings so as to be weather-tight. The exterior surface of a carbon steel tank, and the inside surface of a carbon steel jacket must be given a protective coating.

(b) If insulation is a specification requirement, it shall be of sufficient thickness so that the thermal conductance at 60 °F is not more than 0.075 Btu per hour, per square foot, per degree F temperature differential. If exterior heaters are attached to tank, the thickness of the insulation over each heater element may be reduced to one-half that required for the shell.

[29 FR 18995, Dec. 29, 1964. Redesignated at 32 FR 5606, Apr. 5, 1967, and amended by Amdt. 179–10, 36 FR 21344, Nov. 6, 1971; Amdt. 179–50, 60 FR 49077, Sept. 21, 1995]

§ 179.100–6 Thickness of plates.

(a) The wall thickness after forming of the tank shell and heads must not be less than that specified in § 179.101, nor that calculated by the following formula:

$$t = Pd / 2SE$$

Where:

d = Inside diameter in inches;
E = 1.0 welded joint efficiency; except for heads with seams=0.9;
P = Minimum required bursting pressure in p.s.i.;
S = Minimum tensile strength of plate material in p.s.i., as prescribed in § 179.100–7;
t = Minimum thickness of plate in inches after forming.

(b) If plates are clad with material having tensile strength properties at least equal to the base plate, the cladding may be considered a part of the base plate when determining thickness. If cladding material does not have tensile strength at least equal to the base plate, the base plate alone shall meet the thickness requirement.

(c) When aluminum plate is used, the minimum width of bottom sheet of tank shall be 60 inches, measured on the arc, but in all cases the width shall be sufficient to bring the entire width of the longitudinal welded joint, including welds, above the bolster.

[29 FR 18995, Dec. 29, 1964. Redesignated at 32 FR 5606, Apr. 5, 1967, and amended by Amdt. 179–10, 36 FR 21344, Nov. 6, 1971]

§ 179.100–7 Materials.

(a) *Steel plate:* Steel plate materials used to fabricate tank shell and manway nozzle must comply with one of the following specifications with the indicated minimum tensile strength and elongation in the welded condition.

The maximum allowable carbon content must be 0.31 percent when the individual specification allows carbon greater than this amount. The plates may be clad with other approved materials.

Specifications	Minimum tensile strength (p.s.i.) welded condition[1]	Minimum elongation in 2 inches (percent) welded condition (longitudinal)
AAR TC 128, Gr. B	81,000	19
ASTM A 302[2], Gr. B	80,000	20
ASTM A 516[2]	70,000	20
ASTM A 537[2], Class 1	70,000	23

[1] Maximum stresses to be used in calculations.
[2] These specifications are incorporated by reference (IBR, see § 171.7 of this subchapter).

(b) *Aluminum alloy plate:* Aluminum alloy plate material used to fabricate tank shell and manway nozzle must be suitable for fusion welding and must comply with one of the following specifications (IBR, see § 171.7 of this subchapter) with its indicated minimum tensile strength and elongation in the welded condition. * * *

Specifications	Minimum tensile strength (p.s.i.) 0 temper, welded condition[3 4]	Minimum elongation in 2 inches (percent) 0 temper, welded condition (longitudinal)
ASTM B 209, Alloy 5052[1]	25,000	18
ASTM B 209, Alloy 5083[2]	38,000	16
ASTM B 209, Alloy 5086[1]	35,000	14
ASTM B 209, Alloy 5154[1]	30,000	18
ASTM B 209, Alloy 5254[1]	30,000	18
ASTM B 209, Alloy 5454[1]	31,000	18
ASTM B 209, Alloy 5652[1]	25,000	18

[1] For fabrication, the parent plate material may be 0, H112, or H32 temper, but design calculations must be based on minimum tensile strength shown.
[2] 0 temper only.
[3] Weld filler metal 5556 must not be used.
[4] Maximum stress to be used in calculations.

(c) *High alloy steel plate.* (1) High alloy steel plate must conform to the following specifications:

Specifications	Minimum tensile strength (p.s.i.) welded condition[1]	Minimum elongation in 2 inches (percent) weld metal (longitudinal)
ASTM A 240/A 240M (incorporated by reference; *see* § 171.7 of this subchapter), Type 304L	70,000	30
ASTM A 240/A 240M (incorporated by reference; *see* § 171.7 of this subchapter), Type 316L	70,000	30

[1] Maximum stresses to be used in calculations.

(2)(i) High alloy steels used to fabricate tank must be tested in accordance with the following procedures in ASTM A 262, ''Standard Practices for Detecting Susceptibility to Intergranular Attack in Austenitic Stainless Steel'' (IBR, see § 171.7 of this subchapter), and must exhibit corrosion rates not exceeding the following: * * *

Test procedures	Material	Corrosion rate i.p.m.
Practice B	Types 304L and 316L ..	0.0040
Practice C	Type 304L	0.0020

(ii) Type 304L and 316L test specimens must be given a sensitizing treatment prior to testing.

(d) All attachments welded to tank shell must be of approved material which is suitable for welding to the tank.

[Amdt. 179–10, 36 FR 21344, Nov. 6, 1971, as amended by Amdt. 179–32, 48 FR 27707, June 16, 1983; Amdt. 179–47, 58 FR 50237, Sept. 24, 1993; Amdt. 179–52, 61 FR 28679, June 5, 1996; Amdt. 179–52, 61 FR 50255, Sept. 25, 1996; 66 FR 45186, Aug. 28, 2001; 67 FR 51660, Aug. 8, 2002; 68 FR 75759, Dec. 31, 2003]

§ 179.100–8 Tank heads.

(a) The tank head shape shall be an ellipsoid of revolution in which the major axis shall equal the diameter of the shell adjacent to the head and the minor axis shall be one-half the major axis.

(b) Each tank head made from steel which is required to be ''fine grain'' by the material specification, which is hot formed at a temperature exceeding 1700 °F., must be normalized after forming by heating to a temperature between 1550° and 1700 °F., by holding at that temperature for at least 1 hour per inch of thickness (30-minute minimum), and then by cooling in air. If the material specification requires quenching and tempering, the treatment specified in that specification

must be used instead of the one specified above.

[29 FR 18995, Dec. 29, 1964. Redesignated, 32 FR 5606, Apr. 5, 1967 and amended by Amdt. 179–12, 39 FR 15038, Apr. 30, 1974]

§ 179.100–9 Welding.

(a) All joints shall be fusion-welded in compliance with the requirements of AAR Specifications for Tank Cars, appendix W (IBR, see § 171.7 of this subchapter). Welding procedures, welders and fabricators shall be approved.

(b) [Reserved]

[29 FR 18995, Dec. 29, 1964, as amended at 65 FR 58632, Sept. 29, 2000; 68 FR 75759, Dec. 31, 2003]

§ 179.100–10 Postweld heat treatment.

(a) After welding is complete, steel tanks and all attachments welded thereto must be postweld heat treated as a unit in compliance with the requirements of AAR Specifications for Tank Cars, appendix W (IBR, see § 171.7 of this subchapter).

(b) For aluminum tanks, postweld heat treatment is prohibited.

(c) Tank and welded attachments, fabricated from ASTM A 240/A 240M (IBR, *see* § 171.7 of this subchapter), Type 304L or Type 316L materials do not require postweld heat treatment, but these materials do require a corrosion resistance test as specified in § 179.100–7(c)(2).

[Amdt. 179–10, 36 FR 21345, Nov. 6, 1971, as amended by Amdt. 179–47, 58 FR 50238, Sept. 24, 1993; Amdt. 179–52, 61 FR 28679, June 5, 1996; 67 FR 51660, Aug. 8, 2002; 68 FR 75758 and 75759, Dec. 31, 2003]

§ 179.100–12 Manway nozzle, cover and protective housing.

(a) Manway nozzles must be of approved design of forged or rolled steel for steel tanks or of fabricated aluminum alloy for aluminum tanks, with an access opening of at least 18 inches inside diameter, or at least 14 inches by 18 inches around or oval. Each nozzle must be welded to the tank and the opening reinforced in an approved manner in compliance with the requirements of AAR Specifications for Tank Cars, appendix E, Figure E10 (IBR, see § 171.7 of this subchapter).

(b) Manway cover shall be machined to approved dimensions and be of forged or rolled carbon or alloy steel, rolled aluminum alloy or nickel when required by the lading. Minimum thickness is listed in § 179.101. Manway cover shall be attached to manway nozzle by through or stud bolts not entering tank, except as provided in § 179.103–2(a).

(c) Except as provided in § 179.103, protective housing of cast, forged or fabricated approved materials must be bolted to manway cover with not less than twenty ¾-inch studs. The shearing value of the bolts attaching protective housing to manway cover must not exceed 70 percent of the shearing value of bolts attaching manway cover to manway nozzle. Housing must have steel sidewalls not less than three-fourths inch in thickness and must be equipped with a metal cover not less than one-fourth inch in thickness that can be securely closed. Housing cover must have suitable stop to prevent cover striking loading and unloading connections and be hinged on one side only with approved riveted pin or rod with nuts and cotters. Openings in wall of housing must be equipped with screw plugs or other closures.

[29 FR 18995, Dec. 29, 1964. Redesignated at 32 FR 5606, Apr. 5, 1967, and amended by Amdt. 179–10, 36 FR 21345, Nov. 6, 1971; 68 FR 75760, Dec. 31, 2003]

§ 179.100–13 Venting, loading and unloading valves, measuring and sampling devices.

(a) Venting, loading and unloading valves must be of approved design, made of metal not subject to rapid deterioration by the lading, and must withstand the tank test pressure without leakage. The valves shall be bolted to seatings on the manway cover, except as provided in § 179.103. Valve outlets shall be closed with approved screw plugs or other closures fastened to prevent misplacement.

(b) The interior pipes of the loading and unloading valves shall be anchored and, except as prescribed in §§ 173.314(j), 179.102 or 179.103, may be equipped with excess flow valves of approved design.

(c) Gauging device, sampling valve and thermometer well are not specification requirements. When used, they shall be of approved design, made of

metal not subject to rapid deterioration by the lading, and shall withstand the tank test pressure without leakage. Interior pipes of the gauging device and sampling valve, except as prescribed in §§ 173.314(j), 179.102 or 179.103, may be equipped with excess flow valves of approved design. Interior pipe of the thermometer well shall be anchored in an approved manner to prevent breakage due to vibration. The thermometer well shall be closed by an approved valve attached close to the manway cover, or other approved location, and closed by a screw plug. Other approved arrangements that permit testing thermometer well for leaks without complete removal of the closure may be used.

(d) An excess flow valve as referred to in this specification, is a device which closes automatically against the outward flow of the contents of the tank in case the external closure valve is broken off or removed during transit. Excess flow valves may be designed with a by-pass to allow the equalization of pressures.

(e) Bottom of tank shell may be equipped with a sump or siphon bowl, or both, welded or pressed into the shell. Such sumps or siphon bowls, if applied, are not limited in size and must be made of cast, forged or fabricated metal. Each sump or siphon bowl must be of good welding quality in conjunction with the metal of the tank shell. When the sump or siphon bowl is pressed in the bottom of the tank shell, the wall thickness of the pressed section must not be less than that specified for the shell. The section of a circular cross section tank to which a sump or siphon bowl is attached need not comply with the out-of-roundness requirement specified in AAR Specifications for Tank Cars, appendix W, W14.06 (IBR, see § 171.7 of this subchapter). Any portion of a sump or siphon bowl not forming a part of cylinder of revolution must have walls of such thickness and be so reinforced that the stresses in the walls caused by a given internal pressure are no greater than the circumferential stress that would exist under the same internal pressure in the wall of a tank of circular cross section designed in accordance with § 179.100–6(a), but in no case shall the wall thickness be less than that specified in § 179.101–1.

[29 FR 18995, Dec. 29, 1964. Redesignated at 32 FR 5606, Apr. 5, 1967, and amended by Amdt. 179–10, 36 FR 21345, Nov. 6, 1971; Amdt. 179–40, 52 FR 13046, Apr. 20, 1987; Amdt. 179–42, 54 FR 38798, Sept. 20, 1989; 65 FR 58632, Sept. 29, 2000; 68 FR 48571, Aug. 14, 2003; 68 FR 75760, Dec. 31, 2003]

§ 179.100–14 Bottom outlets.

(a) Bottom outlets for discharge of lading is prohibited, except as provided in § 179.103–3. If indicated in § 179.101, tank may be equipped with a bottom washout of approved construction. If applied, bottom washout shall be in accordance with the following requirements;

(1) The extreme projection of the bottom washout equipment may not be more than that allowed by appendix E of the AAR Specifications for Tank Cars (IBR, see § 171.7 of this subchapter).

(2) Bottom washout shall be of cast, forged or fabricated metal and shall be fusion-welded to the tank. It shall be of good weldable quality in conjunction with metal of tank.

(3) If the bottom washout nozzle extends 6 inches or more from shell of tank, a V-shaped breakage groove shall be cut (not cast) in the upper part of the outlet nozzle at a point immediately below the lowest part of the inside closure seat or plug. In no case may the nozzle wall thickness at the root of the ''V'' be more than ¼-inch. Where the nozzle is not a single piece, provision shall be made for the equivalent of the breakage groove. The nozzle must be of a thickness to insure that accidental breakage will occur at or below the ''V'' groove or its equivalent. On cars without continuous center sills, the breakage groove or its equivalent may not be more than 15 inches below the tank shell. On cars with continuous center sills, the breakage groove or its equivalent must be above the bottom of the center sill construction.

(4) The closure plug and seat shall be readily accessible or removable for repairs.

(5) The closure of the washout nozzle must be equipped with a ¾-inch solid

screw plug. Plug must be attached by at least a ¼-inch chain.

(6) Joints between closures and their seats may be gasketed with suitable material.

(b) [Reserved]

[29 FR 18995, Dec. 29, 1964. Redesignated at 32 FR 5606, Apr. 5, 1967, and amended by Amdt. 179–10, 36 FR 21345, Nov. 6, 1971; Amdt. 179–40, 52 FR 13046, Apr. 20, 1987; 66 FR 45186, Aug. 28, 2001; 68 FR 75760, Dec. 31, 2003]

§ 179.100–16 Attachments.

(a) Reinforcing pads must be used between external brackets and shells if the attachment welds exceed 6 linear inches of ¼-inch fillet or equivalent weld per bracket or bracket leg. When reinforcing pads are used, they must not be less than one-fourth inch in thickness, have each corner rounded to a 1-inch minimum radius, and be attached to the tank by continuous fillet welds except for venting provisions. The ultimate shear strength of the bracket-to-reinforcing pad weld must not exceed 85 percent of the ultimate shear strength of the reinforcing pad-to-tank weld.

(b) Attachments not otherwise specified shall be applied by approved means.

[29 FR 18995, Dec. 29, 1964. Redesignated at 32 FR 5606, Apr. 5, 1967, and amended by Amdt. 179–10, 36 FR 21346, Nov. 6, 1971]

§ 179.100–17 Closures for openings.

(a) Closures shall be of approved design and made of metal not subject to rapid deterioration by the lading. Plugs, if used, shall be solid, with NPT threads, and shall be of a length which will screw at least six threads inside the face of fitting or tank.

(b) [Reserved]

§ 179.100–18 Tests of tanks.

(a) Each tank shall be tested by completely filling tank and manway nozzle with water or other liquid having similar viscosity, at a temperature which shall not exceed 100 °F during the test; and applying the pressure prescribed in § 179.101. The tank shall hold the prescribed pressure for at least 10 minutes without leakage or evidence of distress.

(b) Insulated tanks shall be tested before insulation is applied.

(c) Caulking of welded joints to stop leaks developed during the foregoing test is prohibited. Repairs in welded joints shall be made as prescribed in AAR Specifications for Tank Cars, appendix W (IBR, see § 171.7 of this subchapter).

(d) Testing of exterior heaters is not a specification requirement.

[29 FR 18995, Dec. 29, 1964. Redesignated at 32 FR 5606, Apr. 5, 1967; 66 FR 45186, Aug. 28, 2001; 68 FR 75760, Dec. 31, 2003]

§ 179.100–19 Tests of safety relief valves.

(a) Each valve shall be tested by air or gas for compliance with § 179.15 before being put into service.

(b) [Reserved]

[29 FR 18995, Dec. 29, 1964. Redesignated at 32 FR 5606, Apr. 5, 1967, as amended at 62 FR 51561, Oct. 1, 1997]

§ 179.100–20 Stamping.

(a) To certify that the tank complies with all specification requirements, each tank shall be plainly and permanently stamped in letters and figures at least ⅜ inch high into the metal near the center of both outside heads as follows:

	Example of required stamping
Specification	DOT-105A100W
Material	ASTM A 516
Cladding material (if any)	ASTM A240–304
Tank builder's initials	Clad
Date of original test	ABC
Car assembler (if other than tanker builder).	00–0000
	DEF

(b) After July 25, 2012, newly constructed DOT tank cars must have their DOT specification and other required information stamped plainly and permanently on stainless steel identification plates in conformance with the applicable requirements prescribed in § 179.24(a). Tank cars built before July 25, 2012, may have the identification plates instead of or in addition to the head stamping.

[29 FR 18995, Dec. 29, 1964. Redesignated at 32 FR 5606, Apr. 5, 1967, and amended by Amdt. 179–10, 36 FR 21346, Nov. 6, 1971; Amdt. 179–52, 61 FR 28679, June 5, 1996; 65 FR 50463, Aug. 18, 2000; 77 FR 37985, June 25, 2012]

§ 179.101 Individual specification requirements applicable to pressure tank car tanks.

EDITORIAL NOTE: At 66 FR 45186, Aug. 28, 2001, an amendment published amending a table in § 179.101. No text or table appears in § 179.101.

§ 179.101–1 Individual specification requirements.

In addition to § 179.100, the individual specification requirements are as follows:

DOT specification	Insulation	Bursting pressure (psig)	Minimum plate thickness (inches)	Test pressure (psig)	Manway cover thickness	Bottom outlet	Bottom washout	Reference (179.***)
105A100ALW	Yes	500	5/8	100	[2] 2 1/2	No	No.	
105A200ALW	Yes	500	5/8	200	[2] 2 1/2	No	No.	
105A300ALW	Yes	750	5/8	300	[2] 2 5/8	No	No.	
105A100W	Yes	500	[3] 9/16	100	2 1/4	No	No.	
105A200W	Yes	500	[3] 9/16	200	2 1/4	No	No.	
105A300W	Yes	750	[1] 11/16	300	[7] 2 1/4	No	No.	
105A400W	Yes	1,000	[1] 11/16	400	[7] 2 1/4	No	No.	
105A500W	Yes	1,250	[1] 11/16	500	2 1/4	No	No	102–1, 102–2
105A600W	Yes	1,500	[1] 11/16	600	2 1/4	No	No	102–4, 102–17
109A100ALW	Optional	500	5/8	100	[2] 2 1/2	No	Optional.	
109A200ALW	Optional	500	5/8	200	[2] 2 1/2	No	Optional.	
109A300ALW	Optional	750	5/8	300	[2] 2 5/8	No	Optional.	
109A300W	Optional	500	[1] 11/16	300	2 1/4	No	Optional.	
112A200W	Optional [4]	500	[3] [5] 9/16	200	2 1/4	No	No.	
112A340W	Optional [4]	850	[1] 11/16	340	2 1/4	No	No.	
112A400W	Optional [4]	1,000	[1] 11/16	400	2 1/4	No	No.	
112A500W	Optional [4]	1,250	[1] 11/16	500	2 1/4	No	No.	
114A340W	Optional [4]	850	[1] 11/16	340	[6]	Optional	Optional	103
114A400W	Optional [4]	1,000	[1] 11/16	400	[6]	Optional	Optional	103
120A200ALW	Yes	500	5/8	200	[2] 2 1/2	Optional	Optional	103
120A100W	Yes	500	[3] 9/16	100	2 1/4	Optional	Optional	103
120A200W	Yes	500	[3] 9/16	200	2 1/4	Optional	Optional	103
120A300W	Yes	750	[1] 11/16	300	2 1/4	Optional	Optional	103
120A400W	Yes	1,000	[1] 11/16	400	2 1/4	Optional	Optional	103
120A500W	Yes	1,250	[1] 11/16	500	2 1/4	Optional	Optional	103

[1] When steel of 65,000 to 81,000 p.s.i. minimum tensile strength is used, the thickness of plates shall be not less than 5/8 inch, and when steel of 81,000 p.s.i. minimum tensile strength is used, the minimum thickness of plate shall be not less than 9/16 inch.
[2] When approved material other than aluminum alloys are used, the thickness shall be not less than 2¼ inches.
[3] When steel of 65,000 p.s.i. minimum tensile strength is used, minimum thickness of plates shall be not less than ½ inch.
[4] Tank cars not equipped with a thermal protection or an insulation system used for the transportation of a Class 2 (compressed gas) material must have at least the upper two-thirds of the exterior of the tank, including manway nozzle and all appurtenances in contact with this area, finished with a reflective coat of white paint.
[5] For inside diameter of 87 inches or less, the thickness of plates shall be not less than ½ inch.
[6] See AAR Specifications for Tank Cars, appendix E, E4.01 (IBR, see § 171.7 of this subchapter), and § 179.103–2.
[7] When the use of nickel is required by the lading, the thickness shall not be less than two inches.

[Amdt. 179–52, 61 FR 28679, June 5, 1996 as amended at 66 FR 45390, Aug. 28, 2001; 68 FR 75760, Dec. 31, 2003]

§ 179.102 Special commodity requirements for pressure tank car tanks.

(a) In addition to §§ 179.100 and 179.101 the following requirements are applicable:

(b) [Reserved]

§ 179.102–1 Carbon dioxide, refrigerated liquid.

(a) Tank cars used to transport carbon dioxide, refrigerated liquid must comply with the following special requirements:

(1) All plates for tank, manway nozzle and anchorage of tanks must be made of carbon steel conforming to ASTM A 516/A 516M (IBR, see § 171.7 of this subchapter), Grades 55, 60, 65, or 70, or AAR Specification TC 128–78, Grade B. The ASTM A 516/A 516M plate must also meet the Charpy V-Notch test requirements of ASTM A 20/A 20M (see table 16) (IBR, see § 171.7 of this subchapter) in the longitudinal direction of rolling. The TC 128 plate must also

meet the Charpy V-Notch energy absorption requirements of 15 ft.-lb. minimum average for 3 specimens, and 10 ft.-lb. minimum for one specimen, at minus 50 °F in the longitudinal direction of rolling in accord with ASTM A 370 (IBR, see § 171.7 of this subchapter). Production-welded test plates prepared as required by W4.00 of AAR Specifications for Tank Cars, appendix W (IBR, see § 171.7 of this subchapter), must include impact test specimens of weld metal and heat-affected zone. As an alternate, anchor legs may be fabricated of stainless steel, ASTM A 240/A 240M Types 304, 304L, 316 or 316L, for which impact tests are not required.

(2)–(6) [Reserved]

(b) [Reserved]

[29 FR 18995, Dec. 29, 1964]

EDITORIAL NOTE: For FEDERAL REGISTER citations affecting § 179.102–1, see the List of CFR Sections Affected, which appears in the Finding Aids section of the printed volume and at *www.fdsys.gov*.

§ 179.102–2 Chlorine.

(a) Each tank car used to transport chlorine must comply with all of the following:

(1) Tanks must be fabricated from carbon steel complying with ASTM Specification A 516 (IBR, see § 171.7 of this subchapter), Grade 70, or AAR Specification TC 128, Grade A or B.

(2)–(3) [Reserved]

(b) [Reserved]

[Amdt. 179–7, 36 FR 14697, Aug. 10, 1971; Amdt. 179–10, 36 FR 21346, Nov. 6, 1971, as amended by Amdt. 179–25, 44 FR 20433, Apr. 5, 1979; Amdt. 179–40, 52 FR 13046, Apr. 20, 1987; Amdt. 179–45, 55 FR 52728, Dec. 21, 1990; Amdt. 179–52, 61 FR 28680, June 5, 1996; 68 FR 75760, Dec. 31, 2003]

§ 179.102–3 Materials poisonous by inhalation.

(a) Each tank car built after March 16, 2009 for the transportation of a material poisonous by inhalation must, in addition to the requirements prescribed in § 179.100–12(c), enclose the service equipment within a protective housing and cover.

(1) Tank cars must be equipped with a top fitting protection system and nozzle capable of sustaining, without failure, a rollover accident at a speed of 9 miles per hour, in which the rolling protective housing strikes a stationary surface assumed to be flat, level and rigid and the speed is determined as a linear velocity, measured at the geometric center of the loaded tank car as a transverse vector. Failure is deemed to occur when the deformed protective housing contacts any of the service equipment or when the tank retention capability is compromised.

(2) As an alternative to the tank car top fitting protection system requirements in paragraph (a)(1) of this section, the tank car may be equipped with a system that prevents the release of product from any top fitting in the case of an accident where any top fitting would be sheared off. The tank nozzle must meet the performance standard in paragraph (a)(1) of this section and only mechanically operated excess flow devices are authorized.

(b) An application for approval of a tank car built in accordance with § 173.244(a)(3) or § 173.314(d) must include a demonstration, through engineering analysis, that the tank jacket and support structure system, including any anchors and support devices, is capable of withstanding a 6 mile per hour coupling without jacket shift such that results in damage to the nozzle.

[74 FR 1802, Jan. 13, 2009]

§ 179.102–4 Vinyl fluoride, stabilized.

Each tank used to transport vinyl fluoride, stabilized, must comply with the following special requirements:

(a) All plates for the tank must be fabricated of material listed in paragraph (a)(2) of this section, and appurtenances must be fabricated of material listed in paragraph (a)(1) or (a)(2) of this section.

(1) Stainless steel, ASTM A 240/A 240M (IBR, *see* § 171.7 of this subchapter), Type 304, 304L, 316 or 316L, in which case impact tests are not required; or

(2) Steel complying with ASTM Specification A 516 (IBR, see § 171.7 of this subchapter); Grade 70; ASTM Specification A 537 (IBR, see § 171.7 of this subchapter), Class 1; or AAR Specification TC 128, Grade B, in which case impact tests must be performed as follows:

(i) ASTM A 516/A 516M and A 537/A 537M material must meet the Charpy

V-Notch test requirements, in longitudinal direction of rolling, of ASTM A 20/A 20M (IBR, see §171.7 of this subchapter).

(ii) AAR Specification TC 128 material must meet the Charpy V-Notch test requirements, in longitudinal direction of rolling, of 15 ft.-lb. minimum average for 3 specimens, with a 10 ft.-lb. minimum for any one specimen, at minus 50 °F or colder, in accordance with ASTM A 370 (IBR, see §171.7 of this subchapter).

(iii) Production welded test plates must—

(A) Be prepared in accordance with AAR Specifications for Tank Cars, appendix W, W4.00 (IBR, see §171.7 of this subchapter);

(B) Include impact specimens of weld metal and heat affected zone prepared and tested in accordance with AAR Specifications for Tank Cars, appendix W, W9.00; and

(C) Meet the same impact requirements as the plate material.

(b) Insulation must be of approved material.

(c) Excess flow valves must be installed under all liquid and vapor valves, except safety relief valves.

(d) A thermometer well may be installed.

(e) Only an approved gaging device may be installed.

(f) A pressure gage may be installed.

(g) Aluminum, copper, silver, zinc, or an alloy containing any of these metals may not be used in the tank construction, or in fittings in contact with the lading.

(h) The jacket must be stenciled, adjacent to the water capacity stencil,

MINIMUM OPERATING TEMPERATURE __ °F.

(i) The tank car and insulation must be designed to prevent the vapor pressure of the lading from increasing from the pressure at the maximum allowable filling density to the start-to-discharge pressure of the reclosing pressure relief valve within 30 days, at an ambient temperature of 90 °F.

[Amdt. 179–32, 48 FR 27707, June 16, 1983, as amended at 49 FR 24317, June 12, 1984; 49 FR 42736, Oct. 24, 1984; Amdt. 179–45, 55 FR 52728, Dec. 21, 1990; Amdt. 179–52, 61 FR 28680, June 5, 1996; 65 FR 58632, Sept. 29, 2000; 66 FR 33452, June 21, 2001; 66 FR 45186, 45390, Aug. 28, 2001; 67 FR 51660, Aug. 8, 2002; 68 FR 75758, 75760 Dec. 31, 2003]

§ 179.102–17 Hydrogen chloride, refrigerated liquid.

Each tank car used to transport hydrogen chloride, refrigerated liquid must comply with the following special requirements:

(a) The tank car must comply with Specification DOT-105J600W and be designed for loading at minus 50 °F. or colder.

(b) All plates for the tank must be fabricated of material listed in paragraph (b)(2) of this section, and appurtenances must be fabricated of material listed in paragraph (b)(1) or (b)(2) of this section.

(1) Stainless steel, ASTM A 240/A 240M (IBR, *see* §171.7 of this subchapter), Type 304, 304L, 316, or 316L, in which case impact tests are not required; or

(2) Steel conforming to ASTM A 516/A 516M (IBR, see §171.7 of this subchapter), Grade 70; ASTM A 537/A 537M, (IBR, see §171.7 of this subchapter) Class 1; or AAR Specification TC 128, Grade B in which case impact tests must be performed as follows:

(i) ASTM A 516/A 516M and A 537/A 537M material must meet the Charpy V-notch test requirements, in longitudinal direction of rolling, of ASTM A 20/A 20M (IBR, see §171.7 of this subchapter).

(ii) AAR Specification TC 128 material must meet the Charpy V-notch test requirements, in longitudinal direction of rolling of 15 ft.-lb. minimum average for 3 specimens, with a 10 ft.-lb. minimum for any one specimen, at minus 50 °F or colder, in accordance with ASTM A 370 (IBR, see §171.7 of this subchapter).

(iii) Production welded test plates must—

(A) Be prepared in accordance with AAR Specifications for Tank Cars, appendix W, W4.00 (IBR, see §171.7 of this subchapter);

(B) include impact test specimens of weld metal and heat affected zone prepared and tested in accordance with AAR Specifications for Tank Cars, appendix W, W9.00; and

(C) meet the same impact requirements as the plate material.

(c) Insulation must be of approved material.

(d) Pressure relief valves must be trimmed with monel or other approved material and equipped with a rupture disc of silver, polytetrafluoroethylene coated monel, or tantalum. Each pressure relief device shall have the space between the rupture disc and the valve vented with a suitable auxiliary valve. The discharge from each pressure relief valve must be directed outside the protective housing.

(e) Loading and unloading valves must be trimmed with Hastelloy B or C, monel, or other approved material, and identified as ''Vapor'' or ''Liquid''. Excess flow valves must be installed under all liquid and vapor valves, except safety relief valves.

(f) A thermometer well may be installed.

(g) Only an approved gaging device may be installed.

(h) A sump must be installed in the bottom of the tank under the liquid pipes.

(i) All gaskets must be made of, or coated with, polytetrafluoroethylene or other approved material.

(j) The tank car tank may be equipped with exterior cooling coils on top of the tank car shell.

(k) The jacket must be stenciled, adjacent to the water capacity stencil,

MINIMUM OPERATING TEMPERATURE __ °F.

(l) The tank car and insulation must be designed to prevent the pressure of the lading from increasing from the pressure at the maximum allowable filling density to the start-to-discharge pressure of the pressure relief valve within 30 days, at an ambient temperature of 90° F.

(m) Except as provided in § 173.314(d), tank cars built on or after March 16, 2009 used for the transportation of hydrogen chloride, refrigerated liquid, must meet the applicable authorized tank car specification listed in § 173.314(c).

[Amdt. 179–32, 48 FR 27708, June 16, 1983, as amended at 48 FR 50441, Nov. 1, 1983; 49 FR 24317, June 12, 1984; 49 FR 42736, Oct. 24, 1984; Amdt. 179–45, 55 FR 52728, Dec. 21, 1990; 66 FR 45390, Aug. 28, 2001; 67 FR 51660, Aug. 8, 2002; 68 FR 75758, 75760, Dec. 31, 2003; 74 FR 1802, Jan. 13, 2009]

§ 179.103 Special requirements for class 114A * * * tank car tanks.

(a) In addition to the applicable requirements of §§ 179.100 and 179.101 the following requirements shall be complied with:

(b) [Reserved]

§ 179.103–1 Type.

(a) Tanks built under this section may be of any approved cross section.

(b) Any portion of the tank shell not circular in cross section shall have walls of such thickness and be so reinforced that the stresses in the walls caused by a given internal pressure are no greater than the circumferential stresses which would exist under the same internal pressure in the wall of a tank of circular cross section designed in accordance with paragraphs § 179.100–6 (a) and (b), but in no case shall the wall thickness be less than that specified in § 179.101.

(c) [Reserved]

(d) Valves and fittings need not be mounted on the manway cover.

(e) One opening may be provided in each head for use in purging the tank interior.

[29 FR 18995, Dec. 29, 1964. Redesignated at 32 FR 5606, Apr. 5, 1967, and amended by Amdt. 179–50, 60 FR 49077, Sept. 21, 1995]

§ 179.103–2 Manway cover.

(a) The manway cover must be an approved design.

(b) If no valves or measuring and sampling devices are mounted on manway cover, no protective housing is required.

[29 FR 18995, Dec. 29, 1964. Redesignated at 32 FR 5606, Apr. 5, 1967, and amended by Amdt. 179–50, 60 FR 49077, Sept. 21, 1995]

§ 179.103–3 Venting, loading and unloading valves, measuring and sampling devices.

(a) Venting, loading and unloading valves, measuring and sampling devices, when used, shall be attached to a nozzle or nozzles on the tank shell or heads.

(b) These valves and appurtenances must be grouped in one location and, except as provided in § 179.103–5, must be equipped with a protective housing with cover, or may be recessed into tank shell with cover. An additional set grouped in another location may be provided. Protective housing with cover, when used, must have steel sidewalls not less than three-fourths inch in thickness and a metal cover not less than one-fourth inch in thickness that can be securely closed. Underframe sills are an acceptable alternate to the protective housing cover, provided the arrangement is of approved design. For fittings recessed into tank shell, protective cover must be metal and not less than one-fourth inch in thickness.

(c) When tank car is used to transport liquefied flammable gases, the interior pipes of the loading, unloading, and sampling valves must be equipped with excess flow valves of approved design except when quick closing internal valves of approved design are used. When the interior pipe of the gaging device provides a means for the passage of lading from the interior to the exterior of the tank, it must be equipped with an excess flow valve of approved design or with an orifice not exceeding 0.060 inch.

[29 FR 18995, Dec. 29, 1964. Redesignated at 32 FR 5606, Apr. 5, 1967, and amended by Amdt. 179–10, 36 FR 21348, Nov. 6, 1971]

§ 179.103–4 Safety relief devices and pressure regulators.

(a) Safety relief devices and pressure regulators must be located on top of the tank near the center of the car on a nozzle, mounting plate or recess in the shell. Through or stud bolts, if used, must not enter the tank.

(b) Metal guard of approved design must be provided to protect safety relief devices and pressure regulators from damage.

[Amdt. 179–10, 36 FR 21348, Nov. 6, 1971]

§ 179.103–5 Bottom outlets.

(a) In addition to or in place of the venting, loading and unloading valves, measuring and sampling devices as prescribed in § 179.103–3, tanks may be equipped with approved bottom outlet valves. If applied, bottom outlet valves must meet the following requirements:

(1) On cars with center sills, a ball valve may be welded to the outside bottom of the tank or mounted on a pad or nozzle with a tongue and groove or male and female flange attachment, but in no case shall the breakage groove or equivalent extend below the bottom flange of the center sill. On cars without continuous center sills, a ball valve may be welded to the outside bottom of the tank or mounted with a tongue and groove or male and female flange attachment on a pad attached to the outside bottom of the tank. The mounting pad must have a maximum thickness of 2½ inches measured on the longitudinal centerline of the tank. The valve operating mechanism must be provided with a suitable locking arrangement to insure positive closure during transit.

(2) When internal bottom outlet valve is used in liquefied flammable gas service, the outlet of the valve must be equipped with an excess flow valve of approved design, except when a quick-closing internal valve of approved design is used. Protective housing is not required.

(3) Bottom outlet must be equipped with a liquid tight closure at its lower end.

(b) Bottom outlet equipment must be of approved design and must meet the following requirements:

(1) The extreme projection of the bottom outlet equipment may not be more than allowed by appendix E of the AAR Specifications for Tank Cars (IBR, see § 171.7 of this subchapter). All bottom outlet reducers and closures and their attachments shall be secured to the car by at least ⅜ inch chain, or its equivalent, except that bottom outlet closure plugs may be attached by ¼ inch chain. When the bottom outlet closure is of the combination cap and valve type, the pipe connection to the valve shall be closed by a plug, cap, or approved quick coupling device. The bottom outlet equipment should include only the

valve, reducers and closures that are necessary for the attachment of unloading fixtures. The permanent attachment of supplementary exterior fittings must be approved by the AAR Committee on Tank Cars.

(2) To provide for the attachment of unloading connections, the discharge end of the bottom outlet nozzle or reducer, the valve body of the exterior valve, or some fixed attachment thereto, shall be provided with one of the following arrangements or an approved modification thereof. (See appendix E. Fig. E17 of the AAR Specifications for Tank Cars for illustrations of some of the possible arrangements.)

(i) A bolted flange closure arrangement including a minimum 1-inch NPT pipe plug (see Fig. E17.1) or including an auxiliary valve with a threaded closure.

(ii) A threaded cap closure arrangement including a minimum 1-inch NPT pipe plug (see Fig. E17.2) or including an auxiliary valve with a threaded closure.

(iii) A quick-coupling device using a threaded plug closure of at least 1-inch NPT or having a threaded cap closure with a minimum 1-inch NPT pipe plug (see Fig. E17.3 through E17.5). A minimum 1-inch auxiliary test valve with a threaded closure may be substituted for the 1-inch pipe plug (see Fig E17.6). If the threaded cap closure does not have a pipe plug or integral auxiliary test valve, a minimum 1-inch NPT pipe plug shall be installed in the outlet nozzle above the closure (see Fig. E17.7).

(iv) A two-piece quick-coupling device using a clamped dust cap must include an in-line auxiliary valve, either integral with the quick-coupling device or located between the primary bottom outlet valve and the quick-coupling device. The quick-coupling device closure dust cap or outlet nozzle shall be fitted with a minimum 1-inch NPT closure (see Fig. E17.8 and E17.9).

(3) The valve operating mechanism must be provided with a suitable locking arrangement to insure positive closure during transit.

(4) If the outlet nozzle extends 6 inches or more from shell of tank, a V-shaped breakage groove shall be cut (not cast) in the upper part to the outlet nozzle at a point immediately below the lowest part of value closest to the tank. In no case may the nozzle wall thickness at the roof of the ''V'' be more than ¼-inch. On cars without continuous center sills, the breakage groove or its equivalent may not be more than 15 inches below the tank shell. On cars with continuous center sills, the breakage groove or its equivalent must be above the bottom of the center sill construction.

(5) The valve body must be of a thickness which will insure that accidental breakage of the outlet nozzle will occur at or below the ''V'' groove, or its equivalent, and will not cause distortion of the valve seat or valve.

[Amdt. 179–10, 36 FR 21348, Nov. 6, 1971, as amended by Amdt. 179–40, 52 FR 13046, Apr. 20, 1987; Amdt. 179–41, 52 FR 36672, Sept. 30, 1987; Amdt. 179–50, 60 FR 49077, Sept. 21, 1995; Amdt. 179–52, 61 FR 28680, June 5, 1996; Amdt. 179–53, 61 FR 51342, Oct. 1, 1996; 66 FR 45186, Aug. 28, 2001; 68 FR 75761, Dec. 31, 2003]

Subpart D—Specifications for Non-Pressure Tank Car Tanks (Classes DOT-111AW and 115AW)

§ 179.200 General specifications applicable to non-pressure tank car tanks (Class DOT-111).

§ 179.200–1 Tank built under these specifications must meet the requirements of §§ 179.200, and 179.201.

§ 179.200–3 Type.

Tank built under these specifications must be circular in cross section, with formed heads designed convex outward. When specified in § 179.201–1, the tank must have at least one manway or one expansion dome with manway, and such other external projections as are prescribed herein. When the tank is divided into compartments, each compartment must be treated as a separate tank.

[Amdt. 179–10, 36 FR 21348, Nov. 6, 1971]

§ 179.200–4 Insulation.

(a) If insulation is applied, the tank shell and expansion dome when used must be insulated with an approved material. The entire insulation must

be covered with a metal jacket of a thickness not less than 11 gauge (0.1196 inch) nominal (Manufacturer's Standard Gauge) and flashed around all openings so as to be weather tight. The exterior surface of a carbon steel tank and the inside surface of a carbon steel jacket must be given a protection coating.

(b) If insulation is a specification requirement, it shall be of sufficient thickness so that the thermal conductance at 60 °F is not more than 0.225 Btu per hour, per square foot, per degree F temperature differential, unless otherwise provided in § 179.201–1. If exterior heaters are attached to tank, the thickness of the insulation over each heater element may be reduced to one-half that required for the shell.

[29 FR 18995, Dec. 29, 1964. Redesignated at 32 FR 5606, Apr. 5, 1967, and amended by Amdt. 179–10, 36 FR 21349, Nov. 6, 1971; Amdt. 179–50, 60 FR 49078, Sept. 21, 1995]

§ 179.200–6 Thickness of plates.

(a) The wall thickness after forming of the tank shell, dome shell, and of 2:1 ellipsoidal heads must be not less than specified in § 179.201–1, nor that calculated by the following formula:

$$t = \frac{Pd}{2SE}$$

Where:

d = Inside diameter in inches;
E = 0.9 Welded joint efficiency; except E=1.0 for seamless heads;
P = Minimum required bursting pressure in psig;
S = Minimum tensile strength of plate material in p.s.i. as prescribed in § 179.200–7;
t = Minimum thickness of plate in inches after forming.

(b) The wall thickness after forming of 3:1 ellipsoidal heads must be not less than specified in § 179.201–1, nor that calculated by the following formula:

$$t = \frac{Pd}{2SE} \times 1.83$$

Where:

d = Inside diameter in inches;
E = 0.9 Welded joint efficiency; except E=1.0 for seamless heads;
P = Minimum required bursting pressure in psig;
S = Minimum tensile strength of plate material in p.s.i. as prescribed in § 179.200–7;
t = Minimum thickness of plate in inches after forming.

(c) The wall thickness after forming of a flanged and dished head must be not less than specified in § 179.201–1, nor that calculated by the following formula:

$$t = \frac{5PL}{6SE}$$

Where:

E = 0.9 Welded joint efficiency; except E=1.0 for seamless heads;
L = Main inside radius to which head is dished, measured on concave side in inches;
P = Minimum required bursting pressure in psig;
S = Minimum tensile strength of plate material in p.s.i. as prescribed in § 179.200–7;
t = Minimum thickness of plate in inches after forming.

(d) If plates are clad with material having tensile strength properties at least equal to the base plate, the cladding may be considered a part of the base plate when determining thickness. If cladding material does not have tensile strength at least equal to the base plate, the base plate alone must meet the thickness requirements.

(e) For a tank constructed of longitudinal sections, the minimum width of bottom sheet of the tank must be 60 inches measured on the arc, but in all cases the width must be sufficient to bring the entire width of the longitudinal welded joint, including welds, above the bolster.

(f) For a tank built of one piece cylindrical sections, the thickness specified for bottom sheet must apply to the entire cylindrical section.

(g) See § 179.200–9 for thickness requirements for a compartmented tank.

[Amdt. 179–10, 36 FR 21349, Nov. 6, 1971, as amended at 66 FR 45390, Aug. 28, 2001]

§ 179.200–7 Materials.

(a) Plate material used to fabricate the tank and, when used, expansion dome or manway nozzle material, must meet one of the following specifications with the indicated minimum tensile strength and elongation in the welded condition.

(b) *Carbon steel plate:* The maximum allowable carbon content must be 0.31 percent when the individual specification allows carbon content greater than this amount. The plates may be clad with other approved materials:

Specifications	Minimum tensile strength (p.s.i.) welded condition [1]	Minimum elongation in 2 inches (percent) weld metal (longitudinal)
AAR TC 128, Gr. B	81,000	19
ASTM A 516 [2]	70,000	20

[1] Minimum stresses to be used in calculations.
[2] This specification is incorporated by reference (IBR, see § 171.7 of this subchapter).

(c) *Aluminum alloy plate:* Aluminum alloy plate must be suitable for welding and comply with one of the following specifications (IBR, see § 171.7 of this subchapter):

Specifications	Minimum tensile strength (p.s.i.) welded condition [3 4]	Minimum elongation in 2 inches (percent) 0 temper weld metal (longitudinal)
ASTM B 209, Alloy 5052 [1]	25,000	18
ASTM B 209, Alloy 5083 [2]	38,000	16
ASTM B 209, Alloy 5086 [1]	35,000	14
ASTM B 209, Alloy 5154 [1]	30,000	18
ASTM B 209, Alloy 5254 [1]	30,000	18
ASTM B 209, Alloy 5454 [1]	31,000	18
ASTM B 209, Alloy 5652 [1]	25,000	18

[1] For fabrication, the parent plate material may be 0, H112, or H32 temper, but design calculations must be based on minimum tensile strength shown.
[2] 0 temper only.
[3] Weld filler metal 5556 must not be used.
[4] Maximum stresses to be used in calculations.

(d) *High alloy steel plate:* High alloy steel plate must comply with one of the following specifications:

Specifications	Minimum tensile strength (p.s.i.) welded condition [1]	Minimum elongation in 2 inches (percent) weld metal (longitudinal)
ASTM A 240/A 240M (incorporated by reference; *see* § 171.7 of this subchapter), Type 304	75,000	30
ASTM A 240/A 240M (incorporated by reference; *see* § 171.7 of this subchapter), Type 304L	70,000	30
ASTM A 240/A 240M (incorporated by reference; *see* § 171.7 of this subchapter), Type 316	75,000	30
ASTM A 240/A 240M (incorporated by reference; *see* § 171.7 of this subchapter), Type 316L	70,000	30

[1] Maximum stresses to be used in calculations.
[2] High alloy steel materials used to fabricate tank and expansion dome, when used, must be tested in accordance with Practice A of ASTM Specification A 262 titled, ''Standard Practices for Detecting Susceptibility to Intergranular Attack in Austenitic Stainless Steels'' (IBR; see § 171.7 of this subchapter). If the specimen does not pass Practice A, Practice B or C must be used and the corrosion rates may not exceed the following:

Test procedure	Material	Corrosion rate i.p.m.
Practice B	Types 304, 304L, 316, and 316L.	0.0040
Practice C	Type 304L	.0020

Type 304L and Type 316L test specimens must be given a sensitizing treatment prior to testing. (A typical sensitizing treatment is 1 hour at 1250 F.)

(e) *Nickel plate:* Nickel plate must comply with the following specification (IBR, see § 171.7 of this subchapter):

Specifications	Minimum tensile strength (psi) welded condition [1]	Minimum elongation in 2 inches (percent) weld metal (longitudinal)
ASTM B 162 [2]	40,000	20

(f) *Manganese-molybdenum steel plate:* Manganese-molybdenum steel plate must be suitable for fusion welding and comply with the following specification (IBR, see § 171.7 of this subchapter):

Specifications	Minimum tensile strength (p.s.i.) welded condition [1]	Minimum elongation in 2 inches (percent) weld metal (longitudinal)
ASTM A 302, Gr. B	80,000	20

[1] Maximum stresses to be used in calculations.

(g) All parts and items of construction in contact with the lading must be made of material compatible with plate material and not subject to rapid deterioration by the lading, or be coated or lined with suitable corrosion resistant material.

(h) All external projections that may be in contact with the lading and all

castings, forgings, or fabrications used for fittings or attachments to tank and expansion dome, when used, in contact with lading must be made of material to an approved specification. See AAR Specifications for Tank Cars, appendix M, M4.05 (IBR, see § 171.7 of this subchapter) for approved material specifications for castings for fittings.

[Amdt. 179–10, 36 FR 21349, Nov. 9, 1971; 36 FR 21893, Nov. 17, 1971, as amended by Amdt.179–28, 46 FR 49906, Oct. 8, 1981; Amdt. 179–40, 52 FR 13046, Apr. 20, 1987; Amdt. 179–52, 61 FR 28680, June 5, 1996; 66 FR 45186, Aug. 28, 2001; 67 FR 51660, Aug. 8, 2002; 68 FR 75761, Dec. 31, 2003; 70 FR 34076, June 13, 2005]

§ 179.200–8 Tank heads.

(a) All external tank heads must be an ellipsoid of revolution in which the major axis must equal the diameter of the shell and the minor axis must be one-half the major axis.

(b) Internal compartment tank heads may be 2:1 ellipsoidal, 3:1 ellipsoidal, or flanged and dished to thicknesses as specified in § 179.200–6. Flanged and dished heads must have main inside radius not exceeding 10 feet, and inside knuckle radius must not be less than 3¾ inches for steel, alloy steel, or nickel tanks, and not less than 5 inches for aluminum alloy tanks.

[Amdt. 179–10, 36 FR 21350, Nov. 6, 1971]

§ 179.200–9 Compartment tanks.

(a) When a tank is divided into compartments, by inserting interior heads, interior heads must be inserted in accordance with AAR Specifications for Tank Cars, appendix E, E7.00 (IBR, see § 171.7 of this subchapter), and must comply with the requirements specified in § 179.201–1. Voids between compartment heads must be provided with at least one tapped drain hole at their lowest point, and a tapped hole at the top of the tank. The top hole must be closed, and the bottom hole may be closed, with not less than three-fourths inch and not more than 1½-inch solid pipe plugs having NPT threads.

(b) When the tank is divided into compartments by constructing each compartment as a separate tank, these tanks shall be joined together by a cylinder made of plate, having a thickness not less than that required for the tank shell and applied to the outside surface of tank head flanges. The cylinder shall fit the straight flange portion of the compartment tank head tightly. The cylinder shall contact the head flange for a distance of at least two times the plate thickness, or a minimum of 1 inch, whichever is greater. The cylinder shall be joined to the head flange by a full fillet weld. Distance from head seam to cylinder shall not be less than 1½ inches or three times the plate thickness, whichever is greater. Voids created by the space between heads of tanks joined together to form a compartment tank shall be provided with a tapped drain hole at their lowest point and a tapped hole at top of tank. The top hole shall be closed and the bottom hole may be closed with solid pipe plugs not less than ¾ inch nor more than 1½ inches having NPT threads.

[29 FR 18995, Dec. 29, 1964. Redesignated at 32 FR 5606, Apr. 5, 1967, and amended by Amdt. 179–10, 36 FR 21350, Nov. 6, 1971; 66 FR 45186, Aug. 28, 2001; 68 FR 75761, Dec. 31, 2003]

§ 179.200–10 Welding.

(a) All joints shall be fusion-welded in compliance with the requirements of AAR Specifications for Tank Cars, appendix W (IBR, see § 171.7 of this subchapter). Welding procedures, welders and fabricators shall be approved.

(b) Welding is not permitted on or to ductile iron or malleable iron fittings.

[29 FR 18995, Dec. 29, 1964. Redesignated at 32 FR 5606, Apr. 5, 1967, and amended by Amdt. 179–10, 36 FR 21350, Nov. 6, 1971; 68 FR 75761, Dec. 31, 2003]

§ 179.200–11 Postweld heat treatment.

When specified in § 179.201–1, after welding is complete, postweld heat treatment must be in compliance with the requirements of AAR Specifications for Tank Cars, appendix W (IBR, see § 171.7 of this subchapter).

[68 FR 75761, Dec. 31, 2003]

§ 179.200–13 Manway ring or flange, pressure relief device flange, bottom outlet nozzle flange, bottom washout nozzle flange and other attachments and openings.

(a) These attachments shall be fusion welded to the tank and reinforced in an approved manner in compliance with the requirements of appendix E, figure 10, of the AAR Specifications for Tank

Cars (IBR, see §171.7 of this subchapter).

(b) The opening in the manway ring must be at least 16 inches in diameter except that acid resistant lined manways must be at least 18 inches in diameter before lining.

(c) The manway ring or flange, shall be made of cast, forged or fabricated metal. The metal of the dome, tank, or nozzle must be compatible with the manway ring or flange, so that they may be welded together.

(d) The openings for the manway or other fittings shall be reinforced in an approved manner.

[Amdt. 179–40, 52 FR 13047, Apr. 20, 1987, as amended at 68 FR 75761, Dec. 31, 2003]

§ 179.200–14 Expansion capacity.

(a) Tanks shall have expansion capacity as prescribed in this subchapter. This capacity shall be provided in the tank for Class DOT-111A cars, or in a dome for Class DOT-103 and 104 type cars.

(b) For tank cars having an expansion dome, the expansion capacity is the total capacity of the tank and dome combined. The capacity of the dome shall be measured from the inside top of shell of tank to the inside top of dome or bottom of any vent pipe projecting inside of dome, except that when a pressure relief device is applied to side of dome, the effective capacity of the dome shall be measured from top of the pressure relief device opening inside of dome to inside top of shell of tank.

(c) The opening in the tank shell within the dome shall be at least 29 inches in diameter. When the opening in the tank shell exceeds 30 inches in diameter, the opening shall be reinforced in an approved manner. This additional reinforcement may be accomplished by the use of a dome opening of the flued-type as shown in appendix E, Figure E 10C of the AAR Specifications for Tank Cars or by the use of reinforcing as outlined in Appendix E, E3.04 and Figures E10K and E10L. When the opening in the tank shell is less than the inside diameter of the dome, and the dome pocket is not closed off in an approved manner, dome pocket drain holes shall be provided in the tank shell with nipples projecting inside the tank at least 1 inch.

(d) The dome head shall be of approved contour and shall be designed for pressure on concave side.

(e) Aluminum alloy domes: (1) The dome shell thickness shall be calculated by the formula in §179.200–6(a).

(2) The dome head may be an ellipsoid of revolution in which the major axis shall be equal to the diameter of the dome shell and the minor axis shall be one-half the major axis. The thickness in this case shall be determined by using formula in §179.200–6(a).

(3) The dome head, if dished, must be dished to a radius not exceeding 96 inches. Thickness of dished dome head must be calculated by the formula in §179.200–6(c).

(4) Tank shell shall be reinforced by the addition of a plate equal to or greater than shell in thickness and the cross sectional area shall exceed metal removed for dome opening, or tank shell shall be reinforced by a seamless saddle plate equal to or greater than shell in thickness and butt welded to tank shell. The reinforcing saddle plate shall be provided with a fluid opening having a vertical flange of the diameter of the dome for butt welding shell of dome to the flange. The reinforcing saddle plate shall extend about the dome a distance measured along shell of tank at least equal to the extension at top of tank. Other approved designs may be used.

[29 FR 18995, Dec. 29, 1964. Redesignated at 32 FR 5606, Apr. 5, 1967, and amended by Amdt. 179–10, 36 FR 21350, Nov. 6, 1971; Amdt. 179–28, 46 FR 49906, Oct. 8, 1981; Amdt. 179–52, 61 FR 28680, June 5, 1996; 66 FR 45186, 45390, Aug. 28, 2001; 68 FR 48571, Aug. 14, 2003]

§ 179.200–15 Closures for manways.

(a) Manway covers must be of approved type.

(b) Manway covers shall be designed to provide a secure closure of the manway.

(c) Manway covers must be of approved cast, forged, or fabricated metals. Malleable iron, if used, must comply with ASTM A 47 (IBR, see §171.7 of this subchapter), Grade 35018. Cast iron manway covers must not be used.

(d) All joints between manway covers and their seats shall be made tight

against leakage of vapor and liquid by use of gaskets of suitable material.

(e) For other manway cover requirements see § 179.201–1.

[29 FR 18995, Dec. 29, 1964. Redesignated at 32 FR 5606, Apr. 5, 1967, and amended by Amdt. 179–10, 36 FR 21350, Nov. 6, 1971; Amdt. 179–37, 50 FR 11066, Mar. 19, 1985; 68 FR 75762, Dec. 31, 2003]

§ 179.200–16 Gauging devices, top loading and unloading devices, venting and air inlet devices.

(a) When installed, these devices shall be of an approved design which will prevent interchange with any other fixture, and be tightly closed. Unloading pipes shall be securely anchored within the tank. Each tank or compartment may be equipped with one separate air connection.

(b) When the characteristics of the commodity for which the car is authorized are such that these devices must be equipped with valves or fittings to permit the loading and unloading of the contents, these devices, including valves, shall be of an approved design, and be provided with a protective housing except when plug or ball type valves with operating handles removed are used. Provision shall be made for closing pipe connections of valves.

(c) A tank may be equipped with a vacuum relief valve of an approved design. Protective housing is not required.

(d) When using a visual gauging device on a car with a hinged manway cover, an outage scale visible through the manway opening shall be provided. If loading devices are applied to permit tank loading with cover closed, a telltale pipe may be provided. Telltale pipe shall be capable of determining that required outage is provided. Pipe shall be equipped with ¼ inch minimum NPT control valve mounted outside tank and enclosed within a housing. Other approved devices may be used in lieu of outage scale or telltale pipe.

(e) Bottom of tank shell may be equipped with a sump or siphon bowl, or both, welded or pressed into the shell. Such sumps or siphon bowls, if applied are not limited in size and must be made of cast, forged, or fabricated metal. Each sump or siphon bowl must be of good welding quality in conjunction with the metal of the tank shell. When sump or siphon bowl is pressed in the bottom of the tank shell, the wall thickness of the pressed section must not be less than that specified for the shell. The section of a circular cross section tank to which a sump or siphon bowl is attached need not comply with the out-of-roundness requirement specified in appendix W, W14.06, of the AAR Specifications for Tank Cars. Any portion of a sump or siphon bowl not forming a part of a cylinder of revolution must have walls of such thickness and be so reinforced that the stresses in the walls caused by a given internal pressure are not greater than the circumferential stress which would exist under the same internal pressure in the wall of a tank of circular cross section designed in accordance with § 179.200–6 (a) and (d). In no case shall the wall thickness be less than that specified in § 179.201–1.

(f) When top loading and discharge devices, or venting and air inlet devices are installed with exposed piping to a removed location, shutoff valves must be applied directly to reinforcing pads or nozzles at their communication through the tank shell, and must be enclosed in a protective housing with provision for a seal. The piping must include breakage grooves, and suitable bracing. Relief valves must be applied to liquid lines for protection in case lading is trapped. Provision must be made to insure closure of the valves while the car is in transit.

(g) Protective housing, when required, must be fabricated of approved material and have cover and sidewalls not less than 0.119 inch in thickness.

[29 FR 18995, Dec. 29, 1964. Redesignated at 32 FR 5606, Apr. 5, 1967, and amended by Amdt. 179–10, 36 FR 21350, Nov. 6, 1971; Amdt. 179–52, 61 FR 28680, June 5, 1996; 69 FR 54047, Sept. 7, 2004]

§ 179.200–17 Bottom outlets.

(a) If indicated in § 179.201–1, tank may be equipped with bottom outlet. Bottom outlet, if applied, must comply with the following requirements:

(1) The extreme projection of the bottom outlet equipment may not be more than that allowed by appendix E of the AAR Specifications for Tank Cars (IBR, see § 171.7 of this subchapter). All

bottom outlet reducers and closures and their attachments shall be secured to the car by at least ⅜-inch chain, or its equivalent, except that the bottom outlet closure plugs may be attached by ¼-inch chain. When the bottom outlet closure is of the combination cap and valve type, the pipe connection to the valve shall be closed by a plug, cap, or approved quick coupling device. The bottom outlet equipment should include only the valve, reducers and closures that are necessary for the attachment of unloading fixtures. The permanent attachment of supplementary exterior fittings shall be approved by the AAR Committee on Tank Cars.

(2) Bottom outlet must be of approved construction, and be provided with a liquid-tight closure at its lower end.

(3) On cars with center sills, a ball valve may be welded to the outside bottom of the tank or mounted on a pad or nozzle with a tongue and groove or male and female flange attachment. In no case shall the breakage groove or equivalent extend below the bottom flange of the center sill. On cars without continuous center sills, a ball valve may be welded to the outside bottom of the tank or mounted with a tongue and groove or male and female flange attachment on a pad attached to the outside bottom of the tank. The mounting pad must have a maximum thickness of 2½ inches measured on the longitudinal centerline of the tank. The valve operating mechanism must be provided with a suitable locking arrangement to insure positive closure during transit.

(4) The valve operating mechanism for valves applied to the interior of the tank, and outlet nozzle construction, must insure against the unseating of the valve due to stresses or shocks incident to transportation.

(5) Bottom outlet nozzle of interior valves and the valve body of exterior valves, must be of cast, fabricated, or forged metal. If welded to tank, they must be of good weldable quality in conjunction with metal of tank.

(6) To provide for the attachment of unloading connections, the discharge end of the bottom outlet nozzle or reducer, the valve body of the exterior valve, or some fixed attachment thereto, shall be provided with one of the following arrangements or an approved modification thereof. (See appendix E. Fig. E17 of the AAR Specifications for Tank Cars for illustrations of some of the possible arrangements.)

(i) A bolted flange closure arrangement including a minimum 1-inch NPT pipe plug (see Fig. E17.1) or including an auxiliary valve with a threaded closure.

(ii) A threaded cap closure arrangement including a minimum 1-inch NPT pipe plug (see Fig. E17.2) or including an auxiliary valve with a threaded closure.

(iii) A quick-coupling device using a threaded plug closure of at least 1-inch NPT or having a threaded cap closure with a minimum 1-inch NPT pipe plug (see Fig. E17.3 through E17.5). A minimum 1-inch auxiliary test valve with a threaded closure may be substituted for the 1-inch pipe plug (see Fig. E17.6). If the threaded cap closure does not have a pipe plug or integral auxiliary test valve, a minimum 1-inch NPT pipe plug shall be installed in the outlet nozzle above the closure (see Fig. E17.7).

(iv) A two-piece quick-coupling device using a clamped dust cap must include an in-line auxiliary valve, either integral with the quick-coupling device or located between the primary bottom outlet valve and the quick-coupling device. The quick-coupling device closure dust cap or outlet nozzle shall be fitted with a minimum 1-inch NPT closure (see Fig. E17.8 and E17.9).

(7) If the outlet nozzle extends 6 inches or more from the shell of the tank, a V-shaped breakage groove shall be cut (not cast) in the upper part of the outlet nozzle at a point immediately below the lowest part of valve closest to the tank. In no case may the nozzle wall thickness at the root of the ''V'' be more than ¼ inch. The outlet nozzle on interior valves or the valve body on exterior valves may be steam jacketed, in which case the breakage groove or its equivalent must be below the steam chamber but above the bottom of center sill construction. If the outlet nozzle is not a single piece, or if exterior valves are applied, provisions shall be made for the equivalent of the breakage groove. On cars without continuous center sills, the breakage

groove or its equivalent must be no more than 15 inches below the tank shell. On cars with continuous center sills, the breakage groove or its equivalent must be above the bottom of the center sill construction.

(8) The flange on the outlet nozzle or the valve body of exterior valves must be of a thickness which will prevent distortion of the valve seat or valve by any change in contour of the shell resulting from expansion of lading, or other causes, and which will insure that accidental breakage of the outlet nozzle will occur at or below the ''V'' groove, or its equivalent.

(9) The valve must have no wings or stem projecting below the ''V'' groove or its equivalent. The valve and seat must be readily accessible or removable for repairs, including grinding.

(10) The valve operating mechanism on interior valves must have means for compensating for variation in the vertical diameter of the tank produced by expansion, weight of the liquid contents, or other causes, and may operate from the interior of the tank, but in the event the rod is carried through the dome, or tank shell, leakage must be prevented by packing in stuffing box or other suitable seals and a cap.

(b) If indicated in § 179.201–1, tank may be equipped with bottom washout of approved construction. If applied, bottom washout shall be in accordance with the following requirements:

(1) The extreme projection of the bottom washout equipment may not be more than that allowed by appendix E of the AAR Specifications for Tank Cars.

(2) Bottom washout shall be of cast, forged or fabricated metal. If welded to tank, they shall be of good weldable quality in conjunction with metal of tank.

(3) If the washout nozzle extends 6 inches or more from the shell of the tank, a V-shaped breakage groove shall be cut (not cast) in the upper part of the nozzle at a point immediately below the lowest part of the inside closure seat or plug. In no case may the nozzle wall thickness at the root of the ''V'' be more than ¼ inch. Where the nozzle is not a single piece, provisions shall be made for the equivalent of the breakage groove. The nozzle must be of a thickness to insure that accidental breakage will occur at or below the ''V'' groove or its equivalent. On cars without continuous center sills, the breakage groove or its equivalent may not be more than 15 inches below the outer shell. On cars with continuous center sills, the breakage groove or its equivalent must be above the bottom of the center sill construction.

(4) The closure plug and seat must be readily accessible or removable for repairs, including grinding.

(5) The closure of the washout nozzle must be equipped with a ¾-inch solid screw plug. Plug must be attached by at least a ¼-inch chain.

(6) Joints between closures and their seats may be gasketed with suitable material.

[29 FR 18995, Dec. 29, 1964. Redesignated at 32 FR 5606, Apr. 5, 1967, and amended by Amdt. 179–10, 36 FR 21351, Nov. 6, 1971; Amdt. 179–40, 52 FR 13047, Apr. 20, 1987; 68 FR 75762, Dec. 31, 2003]

§ 179.200–19 Reinforcements, when used, and appurtenances not otherwise specified.

(a) All attachments to tank and dome shall be applied by approved means. Rivets if used shall be caulked inside and outside.

(b) Reinforcing pads must be used between external brackets and shells if the attachment welds exceed 6 lineal inches of ¼-inch fillet or equivalent weld per bracket or bracket leg. When reinforcing pads are used, they must not be less than one-fourth inch in thickness, have each corner rounded to a 1 inch minimum radius, and be attached to the tank by continuous fillet welds except for venting provisions. The ultimate shear strength of the bracket to reinforcing pad weld must not exceed 85 percent of the ultimate shear strength of the reinforcing pad to tank weld.

[29 FR 18995, Dec. 29, 1964. Redesignated at 32 FR 5606, Apr. 5, 1967, and amended by Amdt. 179–10, 36 FR 21351, Nov. 6, 1971]

§ 179.200–21 Closures for openings.

(a) All plugs shall be solid, with NPT threads, and shall be of a length which will screw at least 6 threads inside the face of fitting or tank. Plugs, when inserted from the outside of tank heads,

shall have the letter ''S'' at least ⅜ inch in size stamped with steel stamp or cast on the outside surface to indicate the plug is solid.

(b) [Reserved]

§ 179.200–22 Test of tanks.

(a) Each tank shall be tested by completely filling the tank and dome or nozzles with water, or other liquid having similar viscosity, of a temperature which shall not exceed 100 °F. during the test; and applying the pressure prescribed in § 179.201–1. Tank shall hold the prescribed pressure for at least 10 minutes without leakage or evidence of distress. All rivets and closures, except safety relief valves or safety vents, shall be in place when test is made.

(b) Insulated tanks shall be tested before insulation is applied.

(c) Rubber-lined tanks shall be tested before rubber lining is applied.

(d) Caulking of welded joints to stop leaks developed during the foregoing tests is prohibited. Repairs in welded joints shall be made as prescribed in AAR Specifications for Tank Cars, appendix W (IBR, see § 171.7 of this subchapter).

[29 FR 18995, Dec. 29, 1964, as amended at 68 FR 75762, Dec. 31, 2003]

§ 179.200–23 Tests of pressure relief valves.

(a) Each valve shall be tested by air or gas for compliance with § 179.15 before being put into service.

(b) [Reserved]

[29 FR 18995, Dec. 29, 1964. Redesignated at 32 FR 5606, Apr. 5, 1967, as amended at 62 FR 51561, Oct. 1, 1997]

§ 179.200–24 Stamping.

(a) To certify that the tank complies with all specification requirements, each tank shall be plainly and permanently stamped in letters and figures at least ⅜ inch high into the metal near the center of both outside heads as follows:

	Example of required stamping
Specification	DOT-111A
Material	ASTM A 516–GR 70
Cladding material (if any)	ASTM A240–304 Clad
Tank builder's initials	ABC
Date of original test	00–0000
Car assembler (if other than tank builder).	DEF

(b) On Class DOT-111 tank cars, the last numeral of the specification number may be omitted from the stamping; for example, DOT-111A100W.

(c) After July 25, 2012, newly constructed DOT tank cars must have their DOT specification and other required information stamped plainly and permanently on stainless steel identification plates in conformance with the applicable requirements prescribed in § 179.24(a). Tank cars built before July 25, 2012, may have the identification plates instead of or in addition to the head stamping.

[29 FR 18995, Dec. 29, 1964. Redesignated at 32 FR 5606, Apr. 5, 1967, and amended by Amdt. 179–10, 36 FR 21351, Nov. 6, 1971; Amdt. 179–52, 61 FR 28680, June 5, 1996; 68 FR 48571, Aug. 14, 2003; 77 FR 37985, June 25, 2012]

§ 179.201 Individual specification requirements applicable to non-pressure tank car tanks.

§ 179.201–1 Individual specification requirements.

In addition to § 179.200, the individual specification requirements are as follows:

DOT Specification [1]	Insulation	Bursting pressure (psig)	Minimum plate thickness (inches)	Test pressure (psig)	Bottom outlet	Bottom washout	References (179.201 - ***)
111A60ALW1	Optional	240	½	60	Optional	Optional	6(a).
111A60ALW2	Optional	240	½	60	No	Optional.	
111A60W1	Optional	240	7/16	60	Optional	Optional	6(a).
111A60W2	Optional	240	7/16	60	No	Optional.	
111A60W5	Optional	240	7/16	60	No	No	3, 6(b).
111A60W6	Optional	240	7/16	60	Optional	Optional	4, 5, 6(a), 6(c).
111A60W7	Optional	240	7/16	60	No	No	4, 5, 6(a).
111A100ALW1	Optional	500	⅝	100	Optional	Optional	6(a).
111A100ALW2	Optional	500	⅝	100	No	Optional.	
111A100W1	Optional	500	7/16	100	Optional	Optional	6(a).

DOT Specification [1]	Insulation	Bursting pressure (psig)	Minimum plate thickness (inches)	Test pressure (psig)	Bottom outlet	Bottom washout	References (179.201 - ***)
111A100W2	Optional	500	7/16	100	No	Optional.	
111A100W3	Yes	500	7/16	100	Optional	Optional	6(a).
111A100W4	Yes (see 179.201–11).	500	7/16	100	No	No	6(a), 8, 10.
111A100W5	Optional	500	7/16	100	No	No	3.
111A100W6	Optional	500	7/16	100	Optional	Optional	4, 5, 6(a) and 6(c).
111A100W7	Optional	500	7/16	100	No	No	4, 5, 6(c).

[1] Tanks marked "ALW" are constructed from aluminum alloy plate; "AN" nickel plate; "CW," "DW," "EW," "W6," and "W7" high alloy steel or manganese-molybdenum steel plate; and those marked "BW" or "W5" must have an interior lining that conforms to § 179.201–3.

[Amdt. 179–52, 61 FR 28680, June 5, 1996, as amended by 66 FR 45390, Aug. 28, 2001; 68 FR 48571, Aug. 14, 2003]

§ 179.201–2 [Reserved]

§ 179.201–3 Lined tanks.

(a) *Rubber-lined tanks.* (1) Each tank or each compartment thereof must be lined with acid-resistant rubber or other approved rubber compound vulcanized or bonded directly to the metal tank, to provide a nonporous laminated lining, at least 5/32-inch thick, except overall rivets and seams formed by riveted attachments in the lining must be double thickness. The rubber lining must overlap at least 1½ inches at all edges which must be straight and be beveled to an angle of approximately 45°, or butted edges of lining must be sealed with a 3-inch minimum strip of lining having 45° beveled edges.

(2) As an alternate method, the lining may be joined with a skived butt seam then capped with a separate strip of lining 3 inches wide having 45° beveled edges. An additional rubber reinforcing pad at least 4½ feet square and at least ½-inch thick must be applied by vulcanizing to the lining on bottom of tank directly under the manway opening. The edges of the rubber pad must be beveled to an angle of approximately 45°. An opening in this pad for sump is permitted. No lining must be under tension when applied except due to conformation over rivet heads. Interior of tank must be free from scale, oxidation, moisture, and all foreign matter during the lining operation.

(3) Other approved lining materials may be used provided the material is resistant to the corrosive or solvent action of the lading in the liquid or gas phase and is suitable for the service temperatures.

(b) Before a tank car tank is lined with rubber, or other rubber compound, a report certifying that the tank and its equipment have been brought into compliance with spec. DOT-111A60W5 or 111A100W5 must be furnished by car owner to the party who is to apply the lining. A copy of this report in approved form, certifying that tank has been lined in compliance with all requirements of one of the above specifications, must be furnished by party lining tank to car owner. Reports of the latest lining application must be retained by the car owner until the next relining has been accomplished and recorded.

(c) All rivet heads on inside of tank must be buttonhead, or similar shape, and of uniform size. The under surface of heads must be driven tight against the plate. All plates, castings and rivet heads on the inside of the tank must be calked. All projecting edges of plates, castings and rivet heads on the inside of the tank must be rounded and free from fins and other irregular projections. Castings must be free from porosity.

(d) All surfaces of attachments or fittings and their closures exposed to the lading must be covered with at least ⅛-inch acid resistant material. Attachments made of metal not affected by the lading need not be covered with rubber or other acid resistant material.

(e) Hard rubber or polyvinyl chloride may be used for pressure retaining parts of safety vents provided the material is resistant to the corrosive or

solvent action of the lading in the liquid or gas phase and is suitable for the service temperatures.

(f) Polyvinyl chloride lined tanks. Tank car tanks or each compartment thereof may be lined with elastomeric polyvinyl chloride having a minimum lining thickness of three thirty-seconds inch.

(g) Polyurethane lined tanks. Tank car tanks or each compartment thereof may be lined with elastomeric polyurethane having a minimum lining thickness of one-sixteenth inch.

[Amdt. 179–10, 36 FR 21352, Nov. 6, 1971, as amended at 66 FR 45186, Aug. 28, 2001; 68 FR 48571, Aug. 14, 2003]

§ 179.201–4 Material.

All fittings, tubes, and castings and all projections and their closures, except for protective housing, must also meet the requirements specified in ASTM A 262 (IBR, see § 171.7 of this subchapter), except that when preparing the specimen for testing the carburized surface may be finished by grinding or machining.

[68 FR 75762, Dec. 31, 2003]

§ 179.201–5 Postweld heat treatment and corrosion resistance.

(a) Tanks and attachments welded directly thereto must be postweld heat treated as a unit at the proper temperature except as indicated below. Tanks and attachments welded directly thereto fabricated from ASTM A 240/A 240M (IBR, see § 171.7 of this subchapter) Type 430A, Type 304 and Type 316 materials must be postweld heat treated as a unit and must be tested to demonstrate that they possess the corrosion resistance specified in § 179.200–7(d), Footnote 2. Tanks and attachments welded directly thereto, fabricated from ASTM A 240/A 240M Type 304L or Type 316L materials are not required to be postweld heat treated.

(b) Tanks and attachments welded directly thereto, fabricated from ASTM A 240/A 240M Type 304L and Type 316 materials must be tested to demonstrate that they possess the corrosion resistance specified in § 179.200–7(d), Footnote 2.

[68 FR 75762, Dec. 31, 2003]

§ 179.201–6 Manways and manway closures.

(a) The manway cover for spec. DOT 104W, 111A60–ALW1, 111A60W1, 111A100ALW1, 111A–100W1, 111A100W3, or 111A100W6 must be designed to make it impossible to remove the cover while the interior of the tank is subjected to pressure.

(b) The manway cover for spec. DOT 11A60W5, or 111A100W5 must be made of a suitable metal. The top, bottom and edge of manway cover must be acid resistant material covered as prescribed in § 179.201–3. Through-bolt holes must be lined with acid resistant material at least one-eighth inch in thickness. Cover made of metal not affected by the lading need not be acid resistant material covered.

(c) The manway ring and cover for specifications DOT-103CW, 103DW, 103EW, 111360W7, or 11A100W6 must be made of the metal and have the same inspection procedures specified in AAR Specifications for Tank Cars, appendix M, M3.03 (IBR, see § 171.7 of this subchapter).

[Amdt. 179–10, 36 FR 21353, Nov. 6, 1971; 66 FR 45186, Aug. 28, 2001; 68 FR 48571, Aug. 14, 2003; 68 FR 75762, Dec. 31, 2003]

§ 179.201–8 Sampling device and thermometer well.

(a) Sampling valve and thermometer well are not specification requirements. When used, they must be of approved design, made of metal not subject to rapid deterioration by lading, and must withstand a pressure of 100 psig without leakage. Interior pipes of the sampling valve must be equipped with excess flow valves of an approved design. Interior pipe of thermometer well must be closed by an approved valve attached close to fitting where it passes through the tank and closed by a screw plug. Other approved arrangements that permit testing thermometer well for leaks without complete removal of the closure may be used.

(b) [Reserved]

[Amdt. 179–10, 36 FR 21348, Nov. 6, 1971, as amended at 66 FR 45390, Aug. 28, 2001]

§ 179.201–9 Gauging device.

A gauging device of an approved design must be applied to permit determining the liquid level of the lading. The gauging device must be made of materials not subject to rapid deterioration by the lading. When the interior pipe of the gauging device provides a means for passage of the lading from the interior to the exterior of the tank, it must be equipped with an excess flow valve of an approved design. If the opening for passage of lading through the gauging device is not more than 0.060 inch diameter an excess flow valve is not required. The gauging device must be provided with a protective housing.

[Amdt. 179–10, 36 FR 21353, Nov. 6, 1971]

§ 179.201–10 Water capacity marking.

(a) Water capacity of the tank in pounds stamped plainly and permanently in letters and figures at least ⅜ inch high into the metal of the tank immediately below the stamped marks specified in § 179.200–24(a). This mark shall also be stenciled on the jacket immediately below the dome platform and directly behind or within 3 feet of the right or left side of the ladder, or ladders, if there is a ladder on each side of the tank, in letters and figures at least 1½ inches high as follows:

WATER CAPACITY

000000 Pounds

(b) After July 25, 2012, authorized DOT non-pressure tank cars that comply with this section and are equipped with stainless steel identification plates may have the water capacity of the tank in pounds prescribed in the first sentence of paragraph (a) of this section stamped plainly and permanently on their identification plate in conformance with the applicable marking requirements prescribed in § 179.24(a) instead of into the metal of the tank or immediately below the stamped marks specified in § 179.200–24(a).

[29 FR 18995, Dec. 29, 1964. Redesignated at 32 FR 5606, Apr. 5, 1967. Amended at 77 FR 37985, June 25, 2012]

§ 179.201–11 Insulation.

(a) Insulation shall be of sufficient thickness so that the thermal conductance at 60 °F. is not more than 0.075 Btu per hour, per square foot, per degree F. temperature differential.

(b) [Reserved]

§§ 179.202—179.202–22 [Reserved]

§ 179.220 General specifications applicable to nonpressure tank car tanks consisting of an inner container supported within an outer shell (class DOT-115).

§ 179.220–1 Tanks built under these specifications must meet the requirements of §§ 179.220 and 179.221.

§ 179.220–3 Type.

(a) Tanks built under these specifications must consist of an inner container, a support system for the inner container, and an outer shell.

(b) The inner container must be a fusion welded tank of circular cross section with formed heads designed convex outward and must have a manway on top of the tank as prescribed herein. When the inner container is divided into compartments, each compartment must be considered a separate container.

(c) The outer shell must be a fusion welded tank with formed heads designed convex outward.

[Amdt. 179–9, 36 FR 21340, Nov. 6, 1971]

§ 179.220–4 Insulation.

The annular space between the inner container and the outer shell must contain an approved insulation material.

[Amdt. 179–9, 36 FR 21340, Nov. 6, 1971]

§ 179.220–6 Thickness of plates.

(a) The wall thickness, after forming of the inner container shell and 2:1 ellipsoidal heads must be not less than specified in § 179.221–1, or not less than that calculated by the following formula:

$$t = \frac{Pd}{2SE}$$

Where:

d = Inside diameter in inches;

E = 0.9 welded joint efficiency; except E=1.0 for seamless heads;
P = Minimum required bursting pressure in psig;
S = Minimum tensile strength of plate material in p.s.i. as prescribed in AAR Specifications for Tank Cars, appendix M, Table M1;
t = Minimum thickness of plate in inches after forming.

(b) The wall thickness after forming of the inner container heads, if flanged and dished, must be not less than specified in § 179.221–1, or not less than that calculated by the following formula:

$$t = \frac{5PL}{6SE}$$

Where:

E = 0.9 welded joint efficiency; except E=1.0 for seamless heads;
L = Main inside radius to which head is dished, measured on concave side in inches;
P = Minimum required bursting pressure in psig;
S = Minimum tensile strength of plate material in psi as prescribed in AAR Specifications for Tank Cars, appendix M, Table M1 (IBR, see § 171.7 of this subchapter);
t = Minimum thickness of plate in inches after forming.

(c) The wall thickness after forming of the cylindrical section and heads of the outer shell must be not less than seven-sixteenths of an inch.

(d) See § 179.220–9 for plate thickness requirements for inner container when divided into compartments.

[Amdt. 179–9, 36 FR 21340, Nov. 6, 1971, as amended at 66 FR 45390, Aug. 28, 2001; 68 FR 75762, Dec. 31, 2003]

§ 179.220–7 Materials.

(a) The plate material used to fabricate the inner container and nozzles must meet one of the following specifications and with the indicated minimum tensile strength and elongation in the welded condition.

(b) Carbon steel plate: The maximum allowable carbon content must be 0.31 percent when the individual specification allows carbon content greater than this amount. The plates may be clad with other approved materials.

Specifications	Minimum tensile strength (p.s.i.) welded condition [1]	Minimum elongation in 2 inches (percent) weld metal (longitudinal)
AAR TC 128, Gr. B	81,000	19
ASTM A 516 [2], Gr. 70	70,000	20

[1] Maximum stresses to be used in calculations.
[2] This specification is incorporated by reference (IBR, see § 171.7 of this subchapter).

(c) *Aluminum alloy plate:* Aluminum alloy plate must be suitable for welding and comply with one of the following specifications (IBR, see § 171.7 of this subchapter): * * *

Specifications	Minimum tensile strength (p.s.i.) welded condition [3] [4]	Minimum elongation in 2 inches (percent) weld metal (longitudinal)
ASTM B 209, Alloy 5052 [1]	25,000	18
ASTM B 209, Alloy 5083 [2]	38,000	16
ASTM B 209, Alloy 5086 [1]	35,000	14
ASTM B 209, Alloy 5154 [1]	30,000	18
ASTM B 209, Alloy 5254 [1]	30,000	18
ASTM B 209, Alloy 5454 [1]	31,000	18
ASTM B 209, Alloy 5652 [1]	25,000	18

[1] For fabrication, the parent plate material may be 0 H112, or H32 temper, but design calculations must be based on the minimum tensile strength shown.
[2] 0 temper only.
[3] Weld filler metal 5556 must not be used.
[4] Maximum stresses to be used in calculations.

(d) High alloy steel plate: High alloy steel plate must comply with one of the following specifications (IBR, see § 171.7 of this subchapter):

Specifications	Minimum tensile strength (p.s.i.) welded condition [1]	Minimum elongation in 2 inches (percent) weld metal (longitudinal)
ASTM A 240/A 240M (incorporated by reference; *see* § 171.7 of this subchapter), Type 304	75,000	30
ASTM A 240/A 240M (incorporated by reference; *see* § 171.7 of this subchapter), Type 304L	70,000	30
ASTM A 240/A 240M (incorporated by reference; *see* § 171.7 of this subchapter), Type 316	74,000	30
ASTM A 240/A 240M (incorporated by reference; *see* § 171.7 of this subchapter), Type 316L	70,000	30

[1] Maximum stresses to be used in calculations.

(e) Manganese-molybdenum steel plate: Manganese-molybdenum steel

plate must be suitable for fusion welding and must comply with the following specification (IBR, see § 171.7 of this subchapter):

Specifications	Minimum tensile strength (p.s.i.) welded condition [1]	Minimum elongation in 2 inches (percent) weld metal (longitudinal)
ASTM A 302, Gr. B	80,000	20

[1] Maximum stresses to be used in calculations.

(f) Plate materials used to fabricate the outer shell and heads must be those listed in paragraphs (b), (c), (d), or (e) of this section. The maximum allowable carbon content must be 0.31 percent when the individual specification allows carbon content greater than this amount. The plates may be clad with other approved materials.

(g) All appurtenances on the inner container in contact with the lading must be made of approved material compatible with the plate material of the inner container. These appurtenances must not be subject to rapid deterioration by the lading, or must be coated or lined with suitable corrosion resistant material. See AAR Specifications for Tank Cars, appendix M, M4.05 for approved material specifications for castings for fittings.

[Amdt. 179–9, 36 FR 21340, Nov. 6, 1971, as amended by Amdt. 179–28, 46 FR 49906, Oct. 8, 1981; Amdt. 179–40, 52 FR 13048, Apr. 20, 1987; Amdt. 179–52, 61 FR 28681, June 5, 1996; 66 FR 45186, Aug. 28, 2001; 67 FR 51660, Aug. 8, 2002; 68 FR 75762, Dec. 31, 2003]

§ 179.220–8 Tank heads.

(a) Tank heads of the inner container, inner container compartments and outer shell must be of approved contour, and may be flanged and dished or ellipsoidal for pressure on concave side.

(b) Flanged and dished heads must have main inside radius not exceeding 10 feet and inside knuckle radius must be not less than 3¾ inches for steel and alloy steel tanks nor less than 5 inches for aluminum alloy tanks.

(c) Ellipsoidal heads must be an ellipsoid of revolution in which the major axis must equal the diameter of the shell and the minor axis must be one-half the major axis.

[Amdt. 179–9, 36 FR 21341, Nov. 6, 1971]

§ 179.220–9 Compartment tanks.

(a) The inner container may be divided into compartments by inserting interior heads, or by fabricating each compartment as a separate container and joining with a cylinder, or by fabricating each compartment as a separate tank without a joining cylinder. Each compartment must be capable of withstanding, without evidence of yielding or leakage, the required test pressure applied in each compartment separately, or in any combination of compartments.

(b) When the inner container is divided into compartments by fabricating each compartment as a separate container and joining with a cylinder, the cylinder must have a plate thickness not less than that required for the inner container shell and must be applied to the outside surface of the straight flange portion of the container head. The cylinder must fit the straight flange tightly for a distance of at least two times the plate thickness, or 1 inch, whichever is greater and must be joined to the straight flange by a full fillet weld. Distance from fillet weld seam to container head seam must be not less than 1½ inches or three times the plate thickness, whichever is greater.

[Amdt. 179–9, 36 FR 21341, Nov. 6, 1971]

§ 179.220–10 Welding.

(a) All joints must be fusion welded in compliance with AAR Specifications for Tank Cars, appendix W (IBR, see § 171.7 of this subchapter). Welding procedures, welders, and fabricators shall be approved.

(b) Radioscopy of the outer shell is not a specification requirement.

(c) Welding is not permitted on or to ductile iron or malleable iron fittings.

[Amdt. 179–9, 36 FR 21341, Nov. 6, 1971, as amended at 68 FR 75762, Dec. 31, 2003]

§ 179.220–11 Postweld heat treatment.

(a) Postweld heat treatment of the inner container is not a specification requirement.

(b) Postweld heat treatment of the cylindrical portions of the outer shell to which the anchorage or draft sills are attached must comply with AAR Specifications for Tank Cars, appendix W (IBR, see § 171.7 of this subchapter).

(c) When cold formed heads are used on the outer shell they must be heat treated before welding to shell if postweld heat treatment is not practicable due to assembly procedures.

[Amdt. 179–9, 36 FR 21341, Nov. 6, 1971, as amended at 68 FR 75762, Dec. 31, 2003]

§ 179.220–13 Inner container manway nozzle and cover.

(a) Inner container manway nozzle must be of approved design with access opening at least 18 inches inside diameter, or at least 14 inches by 18 inches obround or oval.

(b) Manway covers must be of approved type. Design must provide a secure closure of the manway and must make it impossible to remove the cover while the tank interior is under pressure.

(c) All joints between manway covers and their seats must be made tight against leakage of vapor and liquid by use of suitable gaskets.

(d) Manway covers must be cast, forged, or fabricated metal complying with subsection § 179.220–7(g) of this section.

(e) A seal must be provided between the inner container manway nozzle and the opening in the outer shell.

[Amdt. 179–9, 36 FR 21341, Nov. 6, 1971]

§ 179.220–14 Openings in the tanks.

Openings in the inner container and the outer shell must be reinforced in compliance with AAR Specifications for Tank Cars, appendix E (IBR, see § 171.7 of this subchapter). In determining the required reinforcement area for openings in the outer shell, *t* shall be one-fourth inch.

[68 FR 75763, Dec. 31, 2003]

§ 179.220–15 Support system for inner container.

(a) The inner container must be supported within the outer shell by a support system of adequate strength and ductility at its operating temperature to support the inner container when filled with liquid lading to any level. The support system must be designed to support, without yielding, impact loads producing accelerations of the following magnitudes and directions when the inner container is loaded so that the car is at its rail load limit, and the car is equipped with a conventional AAR Specification M–901 draft gear.

Longitudinal	7G
Transverse	3G
Vertical	3G

(b) The longitudinal acceleration may be reduced to 3G where a cushioning device of approved design, which has been tested to demonstrate its ability to limit body forces to 400,000 pounds maximum at a 10 miles per hour impact, is used between the coupler and the tank structure. The support system must be of approved design and the inner container must be thermally isolated from the outer shell to the best practical extent. The inner container and outer shell must be permanently bonded to each other electrically either by the support system used, piping, or by a separate electrical connection of approved design.

[Amdt. 179–9, 36 FR 21341, Nov. 6, 1971, as amended by Amdt. 179–28, 46 FR 49906, Oct. 8, 1981]

§ 179.220–16 Expansion capacity.

Expansion capacity must be provided in the shell of the inner container as prescribed in § 179.221–1.

[Amdt. 179–9, 36 FR 21341, Nov. 6, 1971]

§ 179.220–17 Gauging devices, top loading and unloading devices, venting and air inlet devices.

(a) When installed, each device must be of approved design which will prevent interchange with any other fixture and must be tightly closed. Each unloading pipe must be securely anchored within the inner container. Each inner container or compartment thereof may be equipped with one separate air connection.

(b) When the characteristics of the commodity for which the car is authorized require these devices to be equipped with valves or fittings to permit the loading and unloading of the contents, these devices including

valves, shall be provided with a protective housing except when plug or ball-type valves with operating handles removed are used. Provision must be made for closing pipe connections of valves.

(c) Inner container may be equipped with a vacuum relief valve of approved design. Protective housing is not required.

(d) When a gauging device is required in § 179.221–1, an outage scale visible through the manway opening must be provided. If loading devices are applied to permit tank loading with cover closed, a telltale pipe may be provided. The telltail pipe must be capable of determining that required outage is provided. The pipe must be equipped with ¼-inch maximum, NPT control valve mounted outside tank and enclosed within a protective housing. Other approved devices may be used in place of an outage scale or a telltale pipe.

(e) The bottom of the tank shell may be equipped with a sump or siphon bowl, or both, welded or pressed into the shell. These sumps or siphon bowls, if applied, are not limited in size and must be made of cast, forged, or fabricated metal. Each sump or siphon bowl must be of good welding quality in conjunction with the metal of the tank shell. When the sump or siphon bowl is pressed in the bottom of the tank shell, the wall thickness of the pressed section must not be less than that specified for the shell. The section of a circular cross section tank to which a sump or siphon bowl is attached need not comply with the out-of-roundness requirement specified in appendix W, W14.06 of the AAR Specifications for Tank Cars. Any portion of a sump or siphon bowl not forming a part of a cylinder of revolution must have walls of such thickness and must be so reinforced that the stresses in the walls caused by a given internal pressure are not greater than the circumferential stress which would exist under the same internal pressure in the wall of a tank of circular cross section designed in accordance with §§ 179.220–6(a) and 179.220–9. In no case shall the wall thickness be less than that specified in § 179.221–1.

(f) Protective housing, when required, must be of approved material and must have cover and sidewalls not less than 0.119 inch in thickness.

[Amdt. 179–9, 36 FR 21341, Nov. 6, 1971, as amended at 69 FR 54047, Sept. 7, 2004]

§ 179.220–18 Bottom outlets.

(a) The inner container may be equipped with a bottom outlet of approved design and an opening provided in the outer shell of its access. If applied, the bottom outlet must comply with the following requirements:

(1) The extreme projection of the bottom outlet equipment may not be more than that allowed by appendix E of the AAR Specifications for Tank Cars (IBR, see § 171.7 of this subchapter). All bottom outlet reducers and closures and their attachments shall be secured to car by at at least ⅜-inch chain, or its equivalent, except that bottom outlet closure plugs may be attached by ¼-inch chain. When the bottom outlet closure is of the combination cap and valve type, the pipe connection to the valve shall be closed by a plug, or cap. The bottom outlet equipment should include only the valve, reducers and closures that are necessary for the attachment of unloading fixtures. The permanent attachment of supplementary exterior fittings shall be approved by the AAR Committee on Tank Cars.

(2) Each bottom outlet must be provided with a liquid tight closure at its lower end.

(3) The valve and its operating mechanism must be applied to the outside bottom of the inner container. The valve operating mechanism must be provided with a suitable locking arrangement to insure positive closure during transportation.

(4) Valve outlet nozzle and valve body must be of cast, fabricated or forged metal. If welded to inner container, they must be of good weldable quality in conjunction with metal of tank.

(5) To provide for the attachment of unloading connections, the bottom of the main portion of the outlet nozzle or valve body, or some fixed attachment thereto, must be provided with threaded cap closure arrangement or bolted flange closure arrangement having minimum 1-inch threaded pipe plug.

(6) If outlet nozzle and its closure extends below the bottom of the outer

shell, a V-shaped breakage groove shall be cut (not cast) in the upper part of the outlet nozzle at a point immediately below the lowest part of the valve closest to the tank. In no case may the nozzle wall thickness at the root of the ''V'' be more than ¼-inch. The outlet nozzle or the valve body may be steam jacketed, in which case the breakage groove or its equivalent must be below the steam chamber but above the bottom of the center sill construction. If the outlet nozzle is not a single piece or its exterior valves are applied, provision shall be made for the equivalent of the breakage groove. On cars without continuous center sills, the breakage groove or its equivalent may not be more than 15 inches below the outer shell. On cars with continuous center sills, the breakage groove or its equivalent must be above the bottom of the center sill construction.

(7) The valve body must be of a thickness which will prevent distortion of the valve seat or valve by any change in contour of the shell resulting from expansion of lading, or other causes, and which will insure that accidental breakage of the outlet nozzle will occur at or below the ''V'' groove, or its equivalent.

(8) The valve must have no wings or stem projection below the ''V'' groove or its equivalent. The valve and seat must be readily accessible or removable for repairs, including grinding.

(b) Inner container may be equipped with bottom washout of approved design. If applied, bottom washout must comply with the following requirements:

(1) The extreme projection of the bottom washout equipment may not be more than that allowed by appendix E of the AAR Specifications for Tank Cars.

(2) Bottom washout must be of cast, forged or fabricated metals. If it is welded to the inner container, it must be of good weldable quality in conjunction with metal of tank.

(3) If washout nozzle extends below the bottom of the outer shell, a V-shaped breakage groove shall be cut (not cast) in the upper part of the nozzle at a point immediately below the lowest part of the inside closure seat or plug. In no case may the nozzle wall thickness at the root of the ''V'' be more than ¼-inch. Where the nozzle is not a single piece, provisions shall be made for the equivalent of the breakage groove. The nozzle must be of a thickness to insure that accidental breakage will occur at or below the ''V'' groove or its equivalent. On cars without a continuous center sill, the breakage groove or its equivalent may not be more than 15 inches below the outer shell. On cars with continuous center sills, the breakage groove or its equivalent must be above the bottom of the center sill construction.

(4) The closure plug and seat must be readily accessible or removable for repairs.

(5) The closure of the washout nozzle must be equipped with a ¾-inch solid screw plug. Plug must be attached by at least a ¼-inch chain.

(6) Joints between closures and their seats may be gasketed with suitable material.

[Amdt. 179–9, 36 FR 21342, Nov. 6, 1971, as amended by Amdt. 179–40, 52 FR 13048, Apr. 20, 1987; 68 FR 75763, Dec. 31, 2003]

§ 179.220–20 Reinforcements, when used, and appurtenances not otherwise specified.

All attachments to inner container and outer shell must be applied by approved means.

[Amdt. 179–9, 36 FR 21342, Nov. 6, 1971]

§ 179.220–22 Closure for openings.

(a) All plugs must be solid, with NPT threads, and must be of a length which will screw at least six threads inside the face of fitting or tank. Plugs, when inserted from the outside of the outer shell tank heads, must have the letter ''S'' at least three-eighths inch in size stamped with steel stamp or cast on the outside surface to indicate the plug is solid.

(b) Openings in the outer shell used during construction for installation must be closed in an approved manner.

[Amdt. 179–9, 36 FR 21343, Nov. 6, 1971]

§ 179.220–23 Test of tanks.

(a) Each inner container or compartment must be tested hydrostatically to the pressure specified in § 179.221–1. The

temperature of the pressurizing medium must not exceed 100 °F. during the test. The container must hold the prescribed pressure for at least 10 minutes without leakage or evidence of distress. Safety relief devices must not be in place when the test is made.

(b) The inner container must be pressure tested before installation within the outer shell. Items which, because of assembly sequence, must be welded to inner container after its installation within outer shell must have their attachment welds thoroughly inspected by a nondestructive dye penetrant method or its equivalent.

(c) Pressure testing of outer shell is not a specification requirement.

[Amdt. 179–9, 36 FR 21343, Nov. 6, 1971]

§ 179.220–24 Tests of pressure relief valves.

Each safety relief valve must be tested by air or gas for compliance with § 179.15 before being put into service.

[Amdt. 179–9, 36 FR 21343, Nov. 6, 1971, as amended at 62 FR 51561, Oct. 1, 1997]

§ 179.220–25 Stamping.

(a) To certify that the tank complies with all specification requirements, each outer shell must be plainly and permanently stamped in letters and figures at least ⅜-inch high into the metal near the center of both outside heads as follows:

	Examples of required stamping
Specifications	DOT-115A60W6.
Inner container:	
Material	ASTM A240–316L.
Shell thickness	Shell 0.167 in.
Head thickness	Head 0.150 in.
Tank builders initials	ABC.
Date of original test	00–0000.
Outer shell:	
Material	ASTM A285–C.
Tank builders initials	WYZ.
Car assembler (if other than inner container or outer shell builders).	DEF.

(b) After July 25, 2012, newly constructed DOT tank cars must have their DOT specification and other required information stamped plainly and permanently on stainless steel identification plates in conformance with the applicable requirements prescribed in § 179.24(a). Tank cars built before July 25, 2012, may have the identification plates instead of or in addition to the head stamping.

[Amdt. 179–9, 36 FR 21343, Nov. 6, 1971, as amended at 77 FR 37986, June 25, 2012]

§ 179.220–26 Stenciling.

(a) The outer shell, or the jacket if the outer shell is insulated, must be stenciled in compliance with AAR Specifications for Tank Cars, appendix C (IBR, see § 171.7 of this subchapter).

(b) Stenciling must be applied on both sides of the outer shell or jacket near the center in letters and figures at least 1½ inches high to indicate the safe upper temperature limit, if applicable, for the inner tank, insulation, and the support system.

[Amdt. 179–9, 36 FR 21343, Nov. 6, 1971, as amended at 68 FR 75763, Dec. 31, 2003]

§ 179.221 Individual specification requirements applicable to tank car tanks consisting of an inner container supported within an outer shell.

§ 179.221–1 Individual specification requirements.

In addition to § 179.220, the individual specification requirements are as follows:

DOT specification	Insulation	Bursting pressure (psig)	Minimum plate thickness (inches)	Test pressure (psig)	Bottom outlet	Bottom washout	Reference (179.221–***)
115A60ALW	Yes	240	3/16	60	Optional.	Optional.	
115A60W1	Yes	240	⅛	60	Optional	Optional	1
115A60W6	Yes	240	⅛	60	Optional	Optional	1

[Amdt. 170–52, 61 FR 28681, June 5, 1996, as amended at 62 FR 51561, Oct. 1, 1997; 66 FR 45390, Aug. 28, 2001]

Subpart E—Specifications for Multi-Unit Tank Car Tanks (Classes DOT-106A and 110AW)

§ 179.300 General specifications applicable to multi-unit tank car tanks designed to be removed from car structure for filling and emptying (Classes DOT-106A and 110AW).

§ 179.300–1 Tanks built under these specifications shall meet the requirements of §§ 179.300 and 179.301.

§ 179.300–3 Type and general requirements.

(a) Tanks built under this specification shall be cylindrical, circular in cross section, and shall have heads of approved design. All openings shall be located in the heads.

(b) Each tank shall have a water capacity of at least 1500 pounds and not more than 2600 pounds.

(c) For tanks made in foreign countries, a chemical analysis of materials and all tests as specified shall be carried out within the limits of the United States under the supervision of a competent and impartial inspector.

§ 179.300–4 Insulation.

(a) Tanks shall not be insulated.

(b) [Reserved]

§ 179.300–6 Thickness of plates.

(a) For class DOT-110A tanks, the wall thickness after forming of the cylindrical portion of the tank must not be less than that specified in § 179.301 nor that calculated by the following formula:

$$t = \frac{Pd}{2SE}$$

Where:

d = inside diameter in inches;
E = 1.0 welded joint efficiency;
P = minimum required bursting pressure in psig;
S = minimum tensile strength of plate material in p.s.i. as prescribed in § 179.300–7;
t = minimum thickness of plate material in inches after forming.

(b) For class DOT-106A tanks, the wall thickness of the cylindrical portion of the tank shall not be less than that specified in § 179.301 and shall be such that at the tank test pressure the maximum fiber stress in the wall of the tank will not exceed 15,750 p.s.i. as calculated by the following formula:

$$s=[p(1.3D^2 + 0.4d^2] / (D^2 - d^2)$$

where:

d = inside diameter in inches;
D = outside diameter in inches;
p = tank test pressure in psig;
s = wall stress in psig

(c) If plates are clad with material having tensile strength at least equal to the base plate, the cladding may be considered a part of the base plate when determining the thickness. If cladding material does not have tensile strength at least equal to the base plate, the base plate alone shall meet the thickness requirements.

[29 FR 18995, Dec. 29, 1964, as amended by Order 71, 31 FR 9083, July 1, 1966. Redesignated at 32 FR 5606, Apr. 5, 1967; 66 FR 45186, 45390, Aug. 28, 2001]

§ 179.300–7 Materials.

(a) Steel plate material used to fabricate tanks must conform with the following specifications with the indicated minimum tensile strength and elongation in the welded condition. However, the maximum allowable carbon content for carbon steel must not exceed 0.31 percent, although the individual ASTM specification may allow for a greater amount of carbon. The plates may be clad with other approved materials:

Specifications [2]	Tensile strength (psi) welded condition [1] (minimum)	Elongation in 2 inches (percent) welded condition [1] (longitudinal) (minimum)
ASTM A 240/A 240M type 304	75,000	25
ASTM A 240/A 240M type 304L	70,000	25
ASTM A 240/A 240M type 316	75,000	25
ASTM A 240/A 240M type 316L	70,000	25
ASTM A 240/A 240M type 321	75,000	25
ASTM A 285 Gr. A	45,000	29
ASTM A 285 Gr. B	50,000	20
ASTM A 285 Gr. C	55,000	20
ASTM A 515/A 515M Gr. 65	65,000	20
ASTM A 515/A 515M Gr. 70	70,000	20
ASTM A 516/A 516M Gr. 70	70,000	20

[1] Maximum stresses to be used in calculations.
[2] These specifications are incorporated by reference (IBR, see § 171.7 of this subchapter.)

(b) [Reserved]

(c) All plates must have their heat number and the name or brand of the manufacturer legibly stamped on them at the rolling mill.

[Amdt. 179–10, 36 FR 21355, Nov. 6, 1971, as amended by Amdt. 179–42, 54 FR 38798, Sept. 20, 1989; Amdt. 179–43, 55 FR 27642, July 5, 1990; Amdt. 179–52, 61 FR 28682, June 5, 1996; Amdt. 179–52, 61 FR 50255, Sept. 25, 1996; Amdt. 179–53, 61 FR 51342, Oct. 1, 1996; 68 FR 75763, Dec. 31, 2003]

§ 179.300–8 Tank heads.

(a) Class DOT-110A tanks shall have fusion-welded heads formed concave to pressure. Heads for fusion welding shall be an ellipsoid of revolution 2:1 ratio of major to minor axis. They shall be one piece, hot formed in one heat so as to provide a straight flange at least 1½ inches long. The thickness shall not be less than that calculated by the following formula:

$$t = \frac{Pd}{2SE}$$

where symbols are as defined in § 179.300–6(a).

(b) Class DOT-106A tanks must have forged-welded heads, formed convex to pressure. Heads for forge welding must be torispherical with an inside radius not greater than the inside diameter of the shell. They must be one piece, hot formed in one heat so as to provide a straight flange at least 4 inches long. They must have snug drive fit into the shell for forge welding. The wall thickness after forming must be sufficient to meet the test requirements of § 179.300–16 and to provide for adequate threading of openings.

[29 FR 18995, Dec. 29, 1964. Redesignated at 32 FR 5606, Apr. 5, 1967, and amended by Amdt. 179–10, 36 FR 21355, Nov. 6, 1971]

§ 179.300–9 Welding.

(a) Longitudinal joints must be fusion welded. Head-to-shell joints must be forge welded on class DOT-106A tanks and fusion welded on class DOT-110A tanks. Welding procedures, welders and fabricators must be approved in accordance with AAR Specifications for Tank Cars, appendix W (IBR, see § 171.7 of this subchapter).

(b) Fusion-welded joints must be in compliance with the requirements of AAR Specifications for Tank Cars, appendix W, except that circumferential welds in tanks less than 36 inches inside diameter need not be radiotaped.

(c) Forge-welded joints shall be thoroughly hammered or rolled to insure sound welds. The flanges of the heads shall be forge lapwelded to the shell and then crimped inwardly toward the center line at least one inch on the radius. Welding and crimping must be accomplished in one heat.

[29 FR 18995, Dec. 29, 1964. Redesignated at 32 FR 5606, Apr. 5, 1967, and as amended by Amdt. 179–10, 36 FR 21355, Nov. 6, 1971; 68 FR 75763, Dec. 31, 2003]

§ 179.300–10 Postweld heat treatment.

After welding is complete, steel tanks and all attachments welded thereto, must be postweld heat treated as a unit in compliance with the requirements of AAR Specifications for Tank Cars, appendix W (IBR, see § 171.7 of this subchapter).

[68 FR 75763, Dec. 31, 2003]

§ 179.300–12 Protection of fittings.

(a) Tanks shall be of such design as will afford maximum protection to any fittings or attachment to the head including the housing referred to in § 179.300–12(b). Tank ends shall slope or curve inward toward the axis so that the diameter at each end is at least 2 inches less than the maximum diameter.

(b) Loading and unloading valves shall be protected by a detachable protective housing of approved design which shall not project beyond the end of the tank and shall be securely fastened to the tank head. Pressure relief devices shall not be covered by the housing.

[29 FR 18995, Dec. 29, 1964, as amended at 68 FR 57634, Oct. 6, 2003]

§ 179.300–13 Venting, loading and unloading valves.

(a) Valves shall be of approved type, made of metal not subject to rapid deterioration by lading, and shall withstand tank test pressure without leakage. The valves shall be screwed directly into or attached by other approved methods to one tank head. Provision shall be made for closing outlet connections of the valves.

(b) Threads for openings must be National Gas Taper Threads (NGT) tapped to gauge, clean cut, even and without checks. Taper threads must comply with §178.61(h)(3)(i) and (h)(3)(ii). Threads for the clean-out/inspection ports of DOT Specification 110A multi-unit tank car tanks may be straight threads instead of taper threads. The straight threads must meet the requirements of §178.61(h)(3)(i) and (h)(3)(iii). Hex plugs may be secured to threaded boss ports using stainless steel safety wire that must not fail during its intended use.

[29 FR 18995, Dec. 29, 1964. Redesignated at 32 FR 5606, Apr. 5, 1967. Amended at 77 FR 37986, June 25, 2012]

§ 179.300–14 Attachments not otherwise specified.

Siphon pipes and their couplings on the inside of the tank head and lugs on the outside of the tank head for attaching the valve protective housing must be fusion-welded in place prior to postweld heat treatment. All other fixtures and appurtenances, except as specifically provided for, are prohibited.

[Amdt. 179–10, 36 FR 21355, Nov. 6, 1971]

§ 179.300–15 Pressure relief devices.

(a) Unless prohibited in part 173 of this subchapter, tanks shall be equipped with one or more relief devices of approved type, made of metal not subject to rapid deterioration by the lading and screwed directly into tank heads or attached to tank heads by other approved methods. The total discharge capacity shall be sufficient to prevent building up pressure in tank in excess of 82.5 percent of the tank test pressure. When relief devices of the fusible plug type are used, the required discharge capacity shall be available in each head. See AAR Specifications for Tank Cars, appendix A (IBR, see §171.7 of this subchapter), for the formula for calculating discharge capacity.

(b) Threads for openings shall be National Gas Taper Threads (NGT) tapped to gage, clean cut, even and without checks.

(c) Pressure relief devices shall be set for start-to-discharge and rupture discs shall burst at a pressure not exceeding that specified in §179.301.

(d) Fusible plugs shall function at a temperature not exceeding 175 °F. and shall be vapor-tight at a temperature of not less than 130 °F.

[29 FR 18995, Dec. 29, 1964, as amended at 64 FR 51920, Sept. 27, 1999; 66 FR 45390, Aug. 28, 2001; 68 FR 75763, Dec. 31, 2003]

§ 179.300–16 Tests of tanks.

(a) After postweld heat treatment, tanks shall be subjected to hydrostatic expansion test in a water jacket, or by other approved methods. No tank shall have been subjected previously to internal pressure within 100 pounds of the test pressure. Each tank shall be tested to the pressure prescribed in §179.301. Pressure shall be maintained for 30 seconds and sufficiently longer to insure complete expansion of tank. Pressure gage shall permit reading to accuracy of one percent. Expansion gage shall permit reading of total expansion to accuracy of one percent. Expansion shall be recorded in cubic cm.

(1) No leaks shall appear and permanent volumetric expansion shall not exceed 10 percent of total volumetric expansion at test pressure.

(2) [Reserved]

(b) After all fittings have been installed, each tank shall be subjected to interior air pressure test of at least 100 psig under conditions favorable to detection of any leakage. No leaks shall appear.

(c) Repairs of leaks detected in manufacture or in foregoing tests shall be made by the same process as employed in manufacture of tank. Caulking, soldering, or similar repairing is prohibited.

[29 FR 18995, Dec. 29, 1964. Redesignated at 32 FR 5606, Apr. 5, 1967, and amended by Amdt. 179–10, 36 FR 21355, Nov. 6, 1971; 66 FR 45390, Aug. 28, 2001]

§ 179.300–17 Tests of pressure relief devices.

(a) Each valve shall be tested by air or gas before being put into service. The valve shall open and be vapor-tight at the pressure prescribed in §179.301.

(b) Rupture disks of non-reclosing pressure relief devices must be tested and qualified as prescribed in appendix A, Paragraph 5, of the AAR Manual of

Standards and Recommended Practices, Section C—Part III, AAR Specifications for Tank Cars (IBR, see § 171.7 of this subchapter).

(c) For pressure relief devices of the fusible plug type, a sample of the plug used shall function at the temperatures prescribed in § 179.300–15.

(d) The start-to-discharge and vapor-tight pressures shall not be affected by any auxiliary closure or other combination.

[29 FR 18995, Dec. 29, 1964. Redesignated at 32 FR 5606, Apr. 5, 1967, and amended by Amdt. 179–10, 36 FR 21355, Nov. 6, 1971; 66 FR 45390, Aug. 28, 2001; 68 FR 48572, Aug. 14, 2003; 68 FR 75763, Dec. 31, 2003]

§ 179.300–18 Stamping.

(a) To certify that the tank complies with all specification requirements, each tank shall be plainly and permanently stamped in letters and figures 3/8 inch high into the metal of valve end chime as follows:

(1) DOT Specification number.

(2) Material and cladding material if any (immediately below the specification number).

(3) Owner's or builder's identifying symbol and serial number (immediately below the material identification). The symbol shall be registered with the Bureau of Explosives, duplications are not authorized.

(4) Inspector's official mark (immediately below the owner's or builder's symbol).

(5) Date of original tank test (month and year, such as 1–64 for January 1964). This should be so placed that dates of subsequent tests may easily be added thereto.

(6) Water capacity—0000 pounds.

(b) A copy of the above stamping in letters and figures of the prescribed size stamped on a brass plate secured to one of the tank heads is authorized.

§ 179.300–19 Inspection.

(a) Tank shall be inspected within the United States and Canada by a competent and impartial inspector as approved by the Associate Administrator of Safety, FRA. For tanks made outside the United States or Canada, the specified inspection shall be made within the United States.

(b) The inspector shall carefully inspect all plates from which tanks are to be made and secure records certifying that plates comply with the specification. Plates which do not comply with § 179.300–7 shall be rejected.

(c) The inspector shall make such inspection as may be necessary to see that all the requirements of this specification, including markings, are fully complied with; shall see that the finished tanks are properly stress relieved and tested.

(d) The inspector shall stamp his official mark on each accepted tank as required in § 179.300–18, and render the report required in § 179.300–20.

[29 FR 18995, Dec. 29, 1964, as amended at 72 FR 55696, Oct. 1, 2007]

§ 179.300–20 Reports.

(a) Before a tank is placed in service, the inspector shall furnish to the builder, tank owner, Bureau of Explosives and the Secretary, Mechanical Division, Association of American Railroads, a report in approved form certifying that the tank and its equipment comply with all the requirements of this specification.

(b) For builder's Certificate of Construction, see § 179.5 (b), (c), and (d).

[29 FR 18995, Dec. 29, 1964. Redesignated at 32 FR 5606, Apr. 5, 1967, and amended by Amdt. 179–10, 36 FR 21355, Nov. 5, 1971]

§ 179.301 Individual specification requirements for multi-unit tank car tanks.

(a) In addition to § 179.300 the individual specification requirements are as follows:

DOT specification	106A500–X	106A800–X	110A500–W	110A600–W	110A800–W	110A1000–W
Minimum required bursting pressure, psig	(1)	(1)	1250	1500	2000	2500
Minimum thickness shell, inches	13/32	11/16	11/32	3/8	15/32	19/32
Test pressure, psig (see § 179.300–16)	500	800	500	600	800	1000

DOT specification	106A500–X	106A800–X	110A500–W	110A600–W	110A800–W	110A1000–W
Safety relief devices, psig (see § 179.300–15)	.....	.....	.....	.....	.....	.....
Start-to-discharge, or burst maximum, p.s.i.	375	600	375	450	600	700
Vapor-tight, minimum psig	300	480	300	360	480	650

[1] None specified.

(b) [Reserved]

[29 FR 18995, Dec. 29, 1964. Redesignated at 32 FR 5606, Apr. 5, 1967, and amended by Amdt. 179–10, 36 FR 21355, Nov. 6, 1971; Amdt. 179–40, 52 FR 13049, Apr. 20, 1987; 65 FR 58632, Sept. 29, 2000; 66 FR 45390, Aug. 28, 2001]

§ 179.302 [Reserved]

Subpart F—Specification for Cryogenic Liquid Tank Car Tanks and Seamless Steel Tanks (Classes DOT-113 and 107A)

SOURCE: Amdt. 179–32, 48 FR 27708, June 16, 1983, unless otherwise noted.

§ 179.400 General specification applicable to cryogenic liquid tank car tanks.

§ 179.400–1 General.

A tank built to this specification must comply with §§ 179.400 and 179.401.

§ 179.400–3 Type.

(a) A tank built to this specification must—

(1) Consist of an inner tank of circular cross section supported essentially concentric within an outer jacket of circular cross section, with the out of roundness of both the inner tank and outer jacket limited in accordance with Paragraph UG–80 in Section VIII of the ASME Code (IBR, see § 171.7 of this subchapter);

(2) Have the annular space evacuated after filling the annular space with an approved insulating material;

(3) Have the inner tank heads designed concave to pressure; and

(4) Have the outer jacket heads designed convex to pressure.

(b) The tank must be equipped with piping systems for vapor venting and transfer of lading, and with pressure relief devices, controls, gages and valves, as prescribed herein.

[Amdt. 179–32, 48 FR 27708, June 16, 1983, as amended at 68 FR 75763, Dec. 31, 2003]

§ 179.400–4 Insulation system and performance standard.

(a) For the purposes of this specification—

(1) *Standard Heat Transfer Rate* (SHTR), expressed in Btu/day/lb of water capacity, means the rate of heat transfer used for determining the satisfactory performance of the insulation system of a cryogenic tank car tank in cryogenic liquid service (see § 179.401–1 table).

(2) *Test cryogenic liquid* means the cryogenic liquid, which may be different from the lading intended to be shipped in the tank, being used during the performance tests of the insulation system.

(3) *Normal evaporation rate* (NER), expressed in lbs. (of the cryogenic liquid)/day, means the rate of evaporation, determined by test of a test cryogenic liquid in a tank maintained at a pressure of approximately one atmosphere, absolute. This determination of the NER is the NER test.

(4) *Stabilization period* means the elapsed time after a tank car tank is filled with the test cryogenic liquid until the NER has stabilized, or 24 hours has passed, whichever is greater.

(5) *Calculated heat transfer rate*. The calculated heat transfer rate (CHTR) is determined by the use of test data obtained during the NER test in the formula:

$$q = [N(\Delta h)(90-t_l)] / [V(8.32828)(t_s-t_f)]$$

Where:

q = CHTR, in Btu/day/lb., of water capacity;
N = NER, determined by NER test, in lbs./day;
Δh = latent heat of vaporization of the test cryogenic liquid at the NER test pressure of approximately one atmosphere, absolute, in Btu/lb.;
90 = ambient temperature at 90 °F.;
V = gross water volume at 60 °F. of the inner tank, in gallons;
t_l = equilibrium temperature of intended lading at maximum shipping pressure, in °F.;
8.32828 = constant for converting gallons of water at 60 °F. to lbs. of water at 60 °F., in lbs./gallon;
t_s = average temperature of outer jacket, determined by averaging jacket temperatures at various locations on the jacket at regular intervals during the NER test, in °F.;
t_f = equilibrium temperature of the test cryogenic liquid at the NER test pressure of approximately, one atmosphere, absolute, in °F.

(b) DOT-113A60W tank cars must—

(1) Be filled with hydrogen, cryogenic liquid to the maximum permitted fill density specified in §173.319(d)(2) table of this subchapter prior to performing the NER test; and

(2) Have a CHTR equal to or less than the SHTR specified in §179.401–1 table for a DOT-113A60W tank car.

(c) DOT-113C120W tank cars must—

(1) Be filled with ethylene, cryogenic liquid to the maximum permitted fill density specified in §173.319(d)(2) table of this subchapter prior to performing the NER test, or be filled with nitrogen, cryogenic liquid to 90 percent of the volumetric capacity of the inner tank prior to performing the NER test; and

(2) Have a CHTR equal to or less than 75 percent of the SHTR specified in §179.401–1 table for a DOT-113C120W tank car.

(d) Insulating materials must be approved.

(e) If the insulation consists of a powder having a tendency to settle, the entire top of the cylindrical portion of the inner tank must be insulated with a layer of glass fiber insulation at least one-inch nominal thickness, or equivalent, suitably held in position and covering an area extending 25 degrees to each side of the top center line of the inner tank.

(f) The outer jacket must be provided with fittings to permit effective evacuation of the annular space between the outer jacket and the inner tank.

(g) A device to measure the absolute pressure in the annular space must be provided. The device must be portable with an easily accessible connection or permanently positioned where it is readily visible to the operator.

[Amdt. 179–32, 48 FR 27708, June 16, 1983, as amended at 49 FR 24318, June 12, 1984; 66 FR 45186, Aug. 28, 2001]

§ 179.400–5 Materials.

(a) Stainless steel of ASTM A 240/A 240M (IBR, see §171.7 of this subchapter), Type 304 or 304L must be used for the inner tank and its appurtenances, as specified in AAR Specifications for Tank Cars, appendix M (IBR, see §171.7 of this subchapter), and must be—

(1) In the annealed condition prior to fabrication, forming and fusion welding;

(2) Suitable for use at the temperature of the lading; and

(3) Compatible with the lading.

(b) Any steel casting, steel forging, steel structural shape or carbon steel plate used to fabricate the outer jacket or heads must be as specified in AAR Specifications for Tank Cars, appendix M.

(c) *Impact tests* must be—

(1) Conducted in accordance with AAR Specifications for Tank Cars, appendix W, W9.01;

(2) Performed on longitudinal specimens of the material;

(3) Conducted at the tank design service temperature or colder; and

(4) Performed on test plate welds and materials used for inner tanks and appurtenances and which will be subjected to cryogenic temperatures.

(d) Impact test values must be equal to or greater than those specified in AAR Specifications for Tank Cars, appendix W. The report of impact tests must include the test values and lateral expansion data.

[Amdt. 179–32, 48 FR 27708, June 16, 1983, as amended at 67 FR 51660, Aug. 8, 2002; 68 FR 75763, Dec. 31, 2003]

§ 179.400–6 Bursting and buckling pressure.

(a) [Reserved]

(b) The outer jacket of the required evacuated insulation system must be designed in accordance with § 179.400–8(d) and in addition must comply with the design loads specified in Section 6.2 of the AAR Specifications for Tank Cars (IBR, see § 171.7 of this subchapter). The designs and calculations must provide for the loadings transferred to the outer jacket through the support system.

[Amdt. 179–32, 48 FR 27708, June 16, 1983, as amended by Amdt. 179–51, 61 FR 18934, Apr. 29, 1996; 65 FR 58632, Sept. 29, 2000; 68 FR 75763, Dec. 31, 2003]

§ 179.400–7 Tank heads.

(a) Tank heads of the inner tank and outer jacket must be flanged and dished, or ellipsoidal.

(b) Flanged and dished heads must have—

(1) A main inside dish radius not greater than the outside diameter of the straight flange;

(2) An inside knuckle radius of not less than 6 percent of the outside diameter of the straight flange; and

(3) An inside knuckle radius of at least three times the head thickness.

§ 179.400–8 Thickness of plates.

(a) The minimum wall thickness, after forming, of the inner shell and any 2:1 ellipsoidal head for the inner tank must be that specified in § 179.401–1, or that calculated by the following formula, whichever is greater:

$$t = Pd / 2SE$$

Where:

t = minimum thickness of plate, after forming, in inches;

P = minimum required bursting pressure in psig;

d = inside diameter, in inches;

S = minimum tensile strength of the plate material, as prescribed in AAR Specifications for Tank Cars, appendix M, Table M1 (IBR, see § 171.7 of this subchapter), in psi;

E = 0.9, a factor representing the efficiency of welded joints, except that for seamless heads, E = 1.0.

(b) The minimum wall thickness, after forming, of any 3:1 ellipsoidal head for the inner tank must be that specified in § 179.401–1, or that calculated by the following formula, whichever is greater:

$$t = 1.83\ Pd / 2SE$$

Where:

t = minimum thickness of plate, after forming, in inches;

P = minimum required bursting pressure in psig;

d = inside diameter, in inches;

S = minimum tensile strength of the plate material, as prescribed in AAR Specifications for Tank Cars, Appendix M, Table M1, in psi;

E = 0.9, a factor representing the efficiency of welded joints, except that for seamless heads, E=1.0.

(c) The minimum wall thickness, after forming, of a flanged and dished head for the inner tank must be that specified in § 179.401–1, or that calculated by the following formula, whichever is greater:

$$t = [PL(3 + \sqrt{(L/r)})] / (8SE)$$

Where:

t = minimum thickness of plate, after forming, in inches;

P = minimum required bursting pressure in psig;

L = main inside radius of dished head, in inches;

r = inside knuckle radius, in inches;

S = minimum tensile strength of plate material, as prescribed in AAR Specifications for Tank Cars, appendix M, table M1, in psi;

E = 0.9, a factor representing the efficiency of welded joints, except that for seamless heads, E = 1.0.

(d) The minimum wall thickness, after forming, of the outer jacket shell may not be less than 7/16 inch. The minimum wall thickness, after forming, of the outer jacket heads may not be less than ½ inch and they must be made from steel specified in § 179.16(c). The annular space is to be evacuated, and the cylindrical portion of the outer jacket between heads, or between stiffening rings if used, must be designed to withstand an external pressure of 37.5 psig (critical collapsing pressure), as determined by the following formula:

$$P_c = [2.6E(t/D)^{2.5}] / [(L/D) - 0.45(t/D)^{0.5}]$$

Where:

P_c = Critical collapsing pressure (37.5 psig minimum) in psig;

E = modulus of elasticity of jacket material, in psi;
t = minimum thickness of jacket material, after forming, in inches;
D = outside diameter of jacket, in inches;
L = distance between stiffening ring centers in inches. (The heads may be considered as stiffening rings located ⅓ of the head depth from the head tangent line.)

[Amdt. 179–32, 48 FR 27708, June 16, 1983; 49 FR 42736, Oct. 24, 1984; 64 FR 51920, Sept. 27, 1999, as amended at 66 FR 45390, Aug. 28, 2001; 68 FR 75763, Dec. 31, 2003]

§ 179.400–9 Stiffening rings.

(a) If stiffening rings are used in designing the cylindrical portion of the outer jacket for external pressure, they must be attached to the jacket by means of fillet welds. Outside stiffening ring attachment welds must be continuous on each side of the ring. Inside stiffening ring attachment welds may be intermittent welds on each side of the ring with the total length of weld on each side not less than one-third of the circumference of the tank. The maximum space between welds may not exceed eight times the outer jacket wall thickness.

(b) A portion of the outer jacket may be included when calculating the moment of inertia of the ring. The effective width of jacket plate on each side of the attachment of the stiffening ring is given by the following formula:

$$W = 0.78(Rt)^{0.5}$$

Where:
W = width of jacket effective on each side of the stiffening ring, in inches;
R = outside radius of the outer jacket, in inches;
t = plate thickness of the outer jacket, after forming, in inches.

(c) Where a stiffening ring is used that consists of a closed section having two webs attached to the outer jacket, the jacket plate between the webs may be included up to the limit of twice the value of ''W'', as defined in paragraph (b) of this section. The outer flange of the closed section, if not a steel structural shape, is subject to the same limitations with ''W'' based on the ''R'' and ''t'' values of the flange. Where two separate members such as two angles, are located less than ''2W'' apart they may be treated as a single stiffening ring member. (The maximum length of plate which may be considered effective is 4W.) The closed section between an external ring and the outer jacket must be provided with a drain opening.

(d) The stiffening ring must have a moment of inertia large enough to support the critical collapsing pressure, as determined by either of the following formulas:

$$I = [0.035D^3 LP_c] / E,$$

or

$$I' = [0.046D^3 LP_c] / E$$

Where:
I = required moment of inertia of stiffening ring about the centroidal axis parallel to the vessel axis, in inches to the fourth power;
I′ = required moment of inertia of combined section of stiffening ring and effective width of jacket plate about the centroidal axis parallel to the vessel axis, in inches to the fourth power;
D = outside diameter of the outer jacket, in inches;
L = one-half of the distance from the centerline of the stiffening ring to the next line of support on one side, plus one-half of the distance from the centerline to the next line of support on the other side of stiffening ring. Both distances are measured parallel to the axis of the vessel, in inches. (A line of support is:
(1) A stiffening ring which meets the requirements of this paragraph, or
(2) A circumferential line of a head at one-third the depth of the head from the tangent line);
P_c = critical collapsing pressure (37.5 psig minimum) in psig;
E = modulus of elasticity of stiffening ring material, in psi.

(e) Where loads are applied to the outer jacket or to stiffening rings from the system used to support the inner tank within the outer jacket, additional stiffening rings, or an increased moment of inertia of the stiffening rings designed for the external pressure, must be provided to carry the support loads.

[Amdt. 179–32, 48 FR 27708, June 16, 1983, as amended at 66 FR 45391, Aug. 28, 2001]

§ 179.400–10 Sump or siphon bowl.

A sump or siphon bowl may be in the bottom of the inner tank shell if—

(a) It is formed directly into the inner tank shell, or is formed and welded to the inner tank shell and is of

weldable quality metal that is compatible with the inner tank shell;

(b) The stress in any orientation under any condition does not exceed the circumferential stress in the inner tank shell; and

(c) The wall thickness is not less than that specified in § 179.401–1.

§ 179.400–11 Welding.

(a) Except for closure of openings and a maximum of two circumferential closing joints in the cylindrical portion of the outer jacket, each joint of an inner tank and the outer jacket must be a fusion double welded butt joint.

(b) The closure for openings and the circumferential closing joints in the cylindrical portion of the outer jacket, including head to shell joints, may be a single welded butt joint using a backing strip on the inside of the joint.

(c) Each joint must be welded in accordance with the requirements of AAR Specifications for Tank Cars, appendix W (IBR, see § 171.7 of this subchapter).

(d) Each welding procedure, welder, and fabricator must be approved.

[Amdt. 179–32, 48 FR 27708, June 16, 1983, as amended at 68 FR 75763, Dec. 31, 2003]

§ 179.400–12 Postweld heat treatment.

(a) Postweld heat treatment of the inner tank is not required.

(b) The cylindrical portion of the outer jacket, with the exception of the circumferential closing seams, must be postweld heat treated as prescribed in AAR Specifications for Tank Cars, appendix W (IBR, see § 171.7 of this subchapter). Any item to be welded to this portion of the outer jacket must be attached before postweld heat treatment. Welds securing the following need not be postweld heat treated when it is not practical due to final assembly procedures:

(1) the inner tank support system to the outer jacket,

(2) connections at piping penetrations,

(3) closures for access openings, and

(4) circumferential closing joints of head to shell joints.

(c) When cold formed heads are used on the outer jacket they must be heat treated before welding to the jacket shell if postweld heat treatment is not practical due to assembly procedures.

[Amdt. 179–32, 48 FR 27708, June 16, 1983, as amended at 68 FR 75763, Dec. 31, 2003]

§ 179.400–13 Support system for inner tank.

(a) The inner tank must be supported within the outer jacket by a support system of approved design. The system and its areas of attachment to the outer jacket must have adequate strength and ductility at operating temperatures to support the inner tank when filled with the lading to any level incident to transportation.

(b) The support system must be designed to support, without yielding, impact loads producing accelerations of the following magnitudes and directions when the inner tank is fully loaded and the car is equipped with a conventional draft gear:

Longitudinal	7''g''
Transverse	3''g''
Vertical	3''g''

The longitudinal acceleration may be reduced to 3''g'' where a cushioning device of approved design, which has been tested to demonstrate its ability to limit body forces to 400,000 pounds maximum at 10 miles per hour, is used between the coupler and the tank structure.

(c) The inner tank and outer jacket must be permanently bonded to each other electrically, by either the support system, piping, or a separate electrical connection of approved design.

§ 179.400–14 Cleaning of inner tank.

The interior of the inner tank and all connecting lines must be thoroughly cleaned and dried prior to use. Proper precautions must be taken to avoid contamination of the system after cleaning.

§ 179.400–15 Radioscopy.

Each longitudinal and circumferential joint of the inner tank, and each longitudinal and circumferential double welded butt joint of the outer jacket, must be examined along its entire length in accordance with the requirements of AAR Specifications for Tank

Cars, appendix W (IBR, see § 171.7 of this subchapter).

[68 FR 75763, Dec. 31, 2003]

§ 179.400–16 Access to inner tank.

(a) The inner tank must be provided with a means of access having a minimum inside diameter of 16 inches. Reinforcement of the access opening must be made of the same material used in the inner tank. The access closure must be of an approved material and design.

(b) If a welded closure is used, it must be designed to allow it to be reopened by grinding or chipping and to be closed again by rewelding, preferably without a need for new parts. A cutting torch may not be used.

§ 179.400–17 Inner tank piping.

(a) *Product lines.* The piping system for vapor and liquid phase transfer and venting must be made for material compatible with the product and having satisfactory properties at the lading temperature. The outlets of all vapor phase and liquid phase lines must be located so that accidental discharge from these lines will not impinge on any metal of the outer jacket, car structures, trucks or safety appliances. Suitable provison must be made to allow for thermal expansion and contraction.

(1) *Loading and unloading line.* A liquid phase transfer line must be provided and it must have a manually operated shut-off valve located as close as practicable to the outer jacket, plus a secondary closure that is liquid and gas tight. This secondary closure must permit any trapped pressure to bleed off before the closure can be removed completely. A vapor trap must be incorporated in the line and located as close as practicable to the inner tank. On a DOT-113A60W tank car, any loading and unloading line must be vacuum jacketed between the outer jacket and the shut-off valve and the shut-off valve must also be vacuum jacketed.

(2) *Vapor phase line.* A vapor phase line must connect to the inner tank and must be of sufficient size to permit the pressure relief devices specified in § 179.400–20 and connected to this line to operate at their design capacity without excessive pressure build-up in the tank. The vapor phase line must have a manually operated shut-off valve located as close as practicable to the outer jacket, plus a secondary closure that is liquid and gas tight. This secondary closure must permit any trapped pressure to bleed off before the closure can be removed completely.

(3) *Vapor phase blowdown line.* A blowdown line must be provided. It must be attached to the vapor phase line specified in paragraph (a)(2) of this section, upstream of the shut-off valve in that line. A by-pass line with a manually operated shut-off valve must be provided to permit reduction of the inner tank pressure when the vapor phase line is connected to a closed system. The discharge from this line must be outside the housing and must be directed upward and away from operating personnel.

(b) Any pressure building system provided for the purpose of pressurizing the vapor space of the inner tank to facilitate unloading the liquid lading must be approved.

[Amdt. 179–32, 48 FR 27708, June 16, 1983, as amended at 66 FR 45391, Aug. 28, 2001]

§ 179.400–18 Test of inner tank.

(a) After all items to be welded to the inner tank have been welded in place, the inner tank must be pressure tested at the test pressure prescribed in § 179.401–1. The temperature of the pressurizing medium may not exceed 38 °C (100 °F) during the test. The inner tank must hold the prescribed pressure for a period of not less than ten minutes without leakage or distortion. In a pneumatic test, due regard for the protection of all personnel should be taken because of the potential hazard involved. After a hydrostatic test the container and piping must be emptied of all water and purged of all water vapor.

(b) Caulking of welded joints to stop leaks developed during the test is prohibited. Repairs to welded joints must be made as prescribed in AAR Specifications for Tank Cars, appendix W (IBR, see § 171.7 of this subchapter).

[Amdt. 179–32, 48 FR 27708, June 16, 1983, as amended at 68 FR 75763, Dec. 31, 2003; 73 FR 57008, Oct. 1, 2008]

§ 179.400–19 Valves and gages.

(a) *Valves.* Manually operated shut-off valves and control valves must be provided wherever needed for control of vapor phase pressure, vapor phase venting, liquid transfer and liquid flow rates. All valves must be made from approved materials compatible with the lading and having satisfactory properties at the lading temperature.

(1) Liquid control valves must be of extended stem design.

(2) Packing, if used, must be satisfactory for use in contact with the lading and of approved materials that will effectively seal the valve stem without causing difficulty of operation.

(3) Each control valve and shut-off valve must be readily operable. These valves must be mounted so that their operation will not transmit excessive forces to the piping system.

(b) *Gages.* Gages, except portable units, must be securely mounted within suitable protective housings. A liquid level gage and a vapor phase pressure gage must be provided as follows:

(1) *Liquid level gage.* (i) A gage of approved design to indicate the quantity of liquefied lading within the inner tank, mounted where it will be readily visible to an operator during transfer operations or storage, or a portable gage with a readily accessible connection, or

(ii) A fixed length dip tube, with a manually operated shut-off valve located as close as practicable to the outer jacket. The dip tube must indicate the maximum liquid level for the allowable filling density. The inner end of the dip tube must be located on the longitudinal centerline of the inner tank and within four feet of the transverse centerline of the inner tank.

(2) *Vapor phase pressure gage.* A vapor phase pressure gage of approved design, with a manually operated shut-off valve located as close as practicable to the outer jacket. The gage must indicate the vapor pressure within the inner tank and must be mounted where it will be readily visible to an operator. An additional fitting for use of a test gage must be provided.

§ 179.400–20 Pressure relief devices.

(a) The tank must be provided with pressure relief devices for the protection of the tank assembly and piping system. The discharge from these devices must be directed away from operating personnel, principal load bearing members of the outer jacket, car structure, trucks and safety appliances. Vent or weep holes in pressure relief devices are prohibited. All main pressure relief devices must discharge to the outside of the protective housings in which they are located, except that this requirement does not apply to pressure relief valves installed to protect isolated sections of lines between the final valve and end closure.

(b) *Materials.* Materials used in pressure relief devices must be suitable for use at the temperature of the lading and otherwise compatible with the lading in both the liquid and vapor phases.

(c) *Inner tank.* Pressure relief devices for the inner tank must be attached to vapor phase piping and mounted so as to remain at ambient temperature prior to operation. The inner tank must be equipped with one or more pressure relief valves and one or more safety vents (except as noted in paragraph (c)(3)(iv) of this section), and installed without an intervening shut-off valve (except as noted in paragraph (c)(3)(iii) of this section). Additional requirements are as follows:

(1) *Safety vent.* The safety vent shall function at the pressure specified in § 179.401–1. The safety vent must be flow rated in accordance with the applicable provisions of AAR Specifications for Tank Cars, appendix A (IBR, see § 171.7 of this subchapter), and provide sufficient capacity to meet the requirements of AAR Specifications for Tank Cars, appendix A, A8.07(a).

(2) *Pressure relief valve.* The pressure relief valve must:

(i) be set to start-to-discharge at the pressure specified in § 179.401–1, and

(ii) meet the requirements of AAR Specifications for Tank Cars, appendix A, A8.07(b).

(3) *Installation of safety vent and pressure relief valve*—(i) *Inlet piping.* (A) The opening through all piping and fittings between the inner tank and its pressure relief devices must have a cross-sectional area at least equal to that of the pressure relief device inlet, and the flow characteristics of this upstream system must be such that the pressure

drop will not adversely affect the relieving capacity or the proper operation of the pressure relief device.

(B) When the required relief capacity is met by the use of multiple pressure relief device placed on one connection, the inlet internal cross-sectional area of this connection must be sufficient to provide the required flow capacity for the proper operation of the pressure relief device system.

(ii) *Outlet piping.* (A) The opening through the discharge lines must have a cross-sectional area at least equal to that of the pressure relief device outlet and may not reduce the relieving capacity below that required to properly protect the inner tank.

(B) When the required relieving capacity is met by use of multiple pressure relief devices placed on a common discharge manifold, the manifold outlet internal cross-sectional area must be at least equal to the combined outlet areas of the pressure relief devices.

(iii) Duplicate pressure relief devices may be used when an approved 3-way selector valve is installed to provide for relief through either duplicate pressure relief device. The 3-way valve must be included in the mounting prescribed by AAR Specifications for Tank Cars, appendix A, A6.02(g), when conducting the flow capacity test on the safety vent prescribed by AAR Specifications for Tank Cars, appendix A, A6.01. Flow capacity tests must be performed with the 3-way valve at both of the extreme positions as well as at the mid-position and the flow capacity must be in accordance with AAR Specifications for Tank Cars, appendix A, A8.07(a).

(iv) An alternate pressure relief valve, set as required in § 179.401–1, may be used in lieu of the safety vent, provided it meets the flow capacity prescribed in AAR Specifications for Tank Cars, appendix A at a flow rating pressure of 110 percent of its start-to-discharge pressure. Installation must—

(A) Prevent moisture accumulation at the seat by providing drainage away from that area,

(B) Permit periodic drainage of the vent piping, and

(C) Prevent accumulation of foreign material in the vent system.

(4) *Evaporation control.* The routine release of vaporized lading may be controlled with a pressure controlling and mixing device, except that a pressure controlling and mixing device is required on each DOT-113A60W car. Any pressure controlling and mixing device must—

(i) Be set to start-to-discharge at a pressure not greater than that specified in § 179.401–1;

(ii) Have sufficient capacity to limit the pressure within the inner tank to that pressure specified in § 179.401–1, when the discharge is equal to twice the normal venting rate during transportation, with normal vacuum and the outer shell at 130 °F; and

(iii) Prevent the discharge of a gas mixture exceeding 50% of the lower flammability limit to the atmosphere under normal conditions of storage or transportation.

(5) *Safety interlock.* If a safety interlock is provided for the purpose of allowing transfer of lading at a pressure higher than the pressure control valve setting but less than the pressure relief valve setting, the design must be such that the safety interlock will not affect the discharge path of the pressure relief value or safety vent at any time. The safety interlock must automatically provide an unrestricted discharge path for the pressure control device at all times when the tank car is in transport service.

(d) *Outer jacket.* The outer jacket must be provided with a suitable system to prevent buildup of annular space pressure in excess of 16 psig or the external pressure for which the inner tank was designed, whichever is less. The total relief area provided by the system must be a minimum of 25 square inches, and means must be provided to prevent clogging of any system opening, as well as to ensure adequate communication to all areas of the insulation space. If a safety vent is a part of the system, it must be designed to prevent distortion of the rupture disc when the annular space is evacuated.

(e) *Piping system.* Where a piping circuit can be isolated by closing a valve,

means for pressure relief must be provided.

[Amdt. 179–32, 48 FR 27708, June 16, 1983, as amended at 66 FR 45391, Aug. 28, 2001; 68 FR 75763, Dec. 31, 2003]

§ 179.400–21 Test of pressure relief valves.

Each valve must be tested with air or gas for compliance with § 179.401–1 before being put into service.

§ 179.400–22 Protective housings.

Each valve, gage, closure and pressure relief device, with the exception of secondary relief valves for the protection of isolated piping, must be enclosed within a protective housing. The protective housing must be adequate to protect the enclosed components from direct solar radiation, mud, sand, adverse environmental exposure and mechanical damage incident to normal operation of the tank car. It must be designed to provide reasonable access to the enclosed components for operation, inspection and maintenance and so that vapor concentrations cannot build up to a dangerous level inside the housing in the event of valve leakage or pressure relief valve operation. All equipment within the protective housing must be operable by personnel wearing heavy gloves and must incorporate provisions for locks or seals. A protective housing and its cover must be constructed of metal not less than 0.119 inch thick.

§ 179.400–23 Operating instructions.

All valves and gages must be clearly identified with corrosion-resistant nameplates. A plate of corrosion-resistant material bearing precautionary instructions for the safe operation of the equipment during storage and transfer operations must be securely mounted so as to be readily visible to an operator. The instruction plate must be mounted in each housing containing operating equipment and controls for product handling. These instructions must include a diagram of the tank and its piping system with the various gages, control valves and pressure relief devices clearly identified and located.

§ 179.400–24 Stamping.

(a) A tank that complies with all specification requirements must have the following information plainly and permanently stamped into the metal near the center of the head of the outer jacket at the ''B'' end of the car, in letters and figures at least ⅜-inch high, in the following order:

	Example of required stamping
Specification	DOT-113A60W.
Design service temperature	Minus 423 °F.
Inner tank	Inner Tank.
Material	ASTM A240–304.
Shell thickness	Shell 3/16 inch.
Head thickness	Head 3/16 inch.
Inside diameter	ID 107 inch.
Inner tank builder's initials	ABC.
Date of original test (month and year) and initials of person conducting original test.	00–0000GHK.
Water capacity	00000 lbs.
Outer jacket	Outer jacket.
Material	ASTM A515–70.
Outer jacket builder's initials	DEF.
Car assembler's initials (if other than inner tank or outer jacket builder).	XYZ.

(b) Any stamping on the shell or heads of the inner tank is prohibited.

(c) In lieu of the stamping required by paragraph (a) of this section, the specified markings may be incorporated on a data plate of corrosion-resistant metal, fillet welded in place on the head of the outer jacket at the ''B'' end of the car.

§ 179.400–25 Stenciling.

Each tank car must be stenciled in compliance with the provisions of the AAR Specifications for Tank Cars, appendix C (IBR, see § 171.7 of this subchapter). The stenciling must also include the following:

(a) The date on which the rupture disc was last replaced and the initials of the person making the replacement, on the outer jacket in letters and figures at least 1½ inches high.

(b) The design service temperature and maximum lading weight, in letters and figures at least 1½ inches high adjacent to the hazardous material stencil.

(c) The water capacity, in pounds net at 60 °F., with the tank at its coldest operating temperature, after deduction for the volume above the inlet to the pressure relief device or pressure control valve, structural members, baffles,

piping, and other appurtenances inside the tank, in letters and figures at least 1½ inches high.

(d) Both sides of the tank car, in letters at least 1½ inches high, with the statement ''Do Not Hump or Cut Off While in Motion.''

(e) The outer jacket, below the tank classification stencil, in letters at least 1½ inches high, with the statement, ''vacuum jacketed.''

[Amdt. 179–32, 48 FR 27708, June 16, 1983, as amended at 66 FR 45391, Aug. 28, 2001; 68 FR 75763, Dec. 31, 2003]

§ 179.401 Individual specification requirements applicable to inner tanks for cryogenic liquid tank car tanks.

§ 179.401–1 Individual specification requirements.

In addition to § 179.400, the individual specification requirements for the inner tank and its appurtenances are as follows:

DOT specification	113A60W	113C120W
Design service temperature, °F.	−423	−260.
Material	§ 179.400–5	§ 179.400–5.
Impact test (weld and plate material).	§ 179.400–5(c)	§ 179.400–5(c).
Impact test values	§ 179.400–5(d)	§ 179.400–5(d).
Standard heat transfer rate. (Btu per day per lb. of water capacity, max.) (see § 179.400–4).	0.097	0.4121.
Bursting pressure, min. psig.	240	300.
Minimum plate thickness shell, inches (see § 179.400–7(a)).	3/16	3/16.
Minimum head thickness, inches (see § 179.400–8 (a), (b), and (c)).	3/16	3/16.
Test pressure, psig (see § 179.400–16).	60	120.
Safety vent bursting pressure, max. psig.	60	120.
Pressure relief valve start-to-discharge pressure, psig (±3 psi).	30	75.
Pressure relief valve vapor tight pressure, min. psig.	24	60.
Pressure relief valve flow rating pressure, max. psig.	40	85.
Alternate pressure relief valve start to-discharge pressure, psig (±3 psi).		90.
Alternate pressure relief valve vapor tight pressure, min. psig.		72.
Alternate pressure relief valve flow rating pressure, max. psig.		100.
Pressure control valve Start-to-vent, max. psig (see § 179.400–20(c)(4)).	17	Not required.
Relief device discharge restrictions.	§ 179.400–20	179.400–20.
Transfer line insulation	§ 179.400–17	Not required.

[Amdt. 179–32, 48 FR 27708, June 16, 1983, as amended at 49 FR 24318, June 12, 1984; 65 FR 58632, Sept. 29, 2000; 66 FR 45390, Aug. 28, 2001]

§ 179.500 Specification DOT-107A * * * * seamless steel tank car tanks.

§ 179.500–1 Tanks built under these specifications shall meet the requirements of § 179.500.

§ 179.500–3 Type and general requirements.

(a) Tanks built under this specification shall be hollow forged or drawn in one piece. Forged tanks shall be machined inside and outside before ends are necked-down and, after necking-down, the ends shall be machined to size on the ends and outside diameter. Machining not necessary on inside or outside of seamless steel tubing, but required on ends after necking-down.

(b) For tanks made in foreign countries, chemical analysis of material and all tests as specified must be carried out within the limits of the United States under supervision of a competent and disinterested inspector; in addition to which, provisions in § 179.500–18 (b) and (c) shall be carried out at the point of manufacture by a recognized inspection bureau with principal office in the United States.

(c) The term ''marked end'' and ''marked test pressure'' used throughout this specification are defined as follows:

(1) ''Marked end'' is that end of the tank on which marks prescribed in § 179.500–17 are stamped.

(2) ''Marked test pressure'' is that pressure in psig which is indicated by the figures substituted for the **** in the marking DOT-107A **** stamped on the marked end of tank.

(d) The gas pressure at 130 °F in the tank shall not exceed 7/10 of the marked test pressure of the tank.

[Amdt. 179–32, 48 FR 27708, June 16, 1983, as amended at 66 FR 45186, 45391, Aug. 28, 2001]

§ 179.500–4 Thickness of wall.

(a) Minimum thickness of wall of each finished tank shall be such that at a pressure equal to 7/10 of the marked test pressure of the tank, the calculated fiber stress in psi at inner wall of tank multiplied by 3.0 will not exceed the tensile strength of any specimen taken from the tank and tested as prescribed in § 179.500–7(b). Minimum wall thickness shall be ¼ inch.

(b) Calculations to determine the maximum marked test pressure permitted to be marked on the tank shall be made by the formula:

$$P = [10S(D^2 - d^2)] / [7(D^2+d^2)]$$

Where:

P = Maximum marked test pressure permitted;

$$S = U / 3.0$$

Where:

U = Tensile strength of that specimen which shows the lower tensile strength of the two specimens taken from the tank and tested as prescribed in § 179.500–7(b).

3 = Factor of safety.

$(D^2 - d^2/(D^2 + d^2)$ = The smaller value obtained for this factor by the operations specified in § 179.500–4(c).

(c) Measure at one end, in a plane perpendicular to the longitudinal axis of the tank and at least 18 inches from that end before necking-down:

d = Maximum inside diameter (inches) for the location under consideration; to be determined by direct measurement to an accuracy of 0.05 inch.

t = Minimum thickness of wall for the location under consideration; to be determined by direct measurement to an accuracy of 0.001 inch.

Take $D = d + 2t$.

Calculate the value of $(D^2 - d^2)/(D^2 + d^2)$

(1) Make similar measurements and calculation for a corresponding location at the other end of the tank.

(2) Use the smaller result obtained, from the foregoing, in making calculations prescribed in paragraph (b) of this section.

[29 FR 18995, Dec. 29, 1964. Redesignated at 32 FR 5606, Apr. 5, 1967, and amended by Amdt. 179–31, 47 FR 43067, Sept. 30, 1982; 66 FR 45391, Aug. 28, 2001]

§ 179.500–5 Material.

(a) Tanks shall be made from open-hearth or electric steel of uniform quality. Material shall be free from seams, cracks, laminations, or other defects injurious to finished tank. If not free from such defects, the surface may be machined or ground to eliminate these defects. Forgings and seamless tubing for bodies of tanks shall be stamped with heat numbers.

(b) Steel (see Note 1) must conform to the following requirements as to chemical composition:

Designation	Class I (percent)	Class II (percent)	Class III (percent)
Carbon, maximum	0.50	0.50	0.53
Manganese, maximum	1.65	1.65	1.85
Phosphorus, maximum	.05	.05	.05
Sulphur, maximum	.06	.05	.05
Silicon, maximum	.35	.30	.37
Molybdenum, maximum	.....	.25	.30
Chromium, maximum	.....	.30	.30
Sum of manganese and carbon not over	2.10	2.10	.....

NOTE 1: Alternate steel containing other alloying elements may be used if approved.

(1) For instructions as to the obtaining and checking of chemical analysis, see § 179.500–18(b)(3).

(2) [Reserved]

§ 179.500–6 Heat treatment.

(a) Each necked-down tank shall be uniformly heat treated. Heat treatment shall consist of annealing or normalizing and tempering for Class I, Class II and Class III steel or oil quenching and tempering for Class III steel. Tempering temperatures shall not be less than 1000 °F. Heat treatment of alternate steels shall be approved. All scale shall be removed from outside of tank to an extent sufficient to allow proper inspection.

(b) To check uniformity of heat treatment, Brinnel hardness tests shall be made at 18 inch intervals on the entire longitudinal axis. The hardness shall not vary more than 35 points in the length of the tank. No hardness tests need be taken within 12 inches from point of head to shell tangency.

(c) A magnetic particle inspection shall be performed after heat treatment on all tanks subjected to a quench and temper treatment to detect the presence of quenching cracks. Cracks shall be removed to sound metal by grinding and the surface exposed shall be blended smoothly into the surrounding area. A wall thickness check shall then be made of the affected area by ultrasonic equipment or other suitable means acceptable to the inspector and if the remaining wall thickness is less than the minimum recorded thickness as determined by § 179.500–4(b) it shall be used for making the calculation prescribed in paragraph (b) of this section.

§ 179.500–7 Physical tests.

(a) Physical tests shall be made on two test specimens 0.505 inch in diameter within 2-inch gauge length, taken 180 degrees apart, one from each ring section cut from each end of each forged or drawn tube before necking-down, or one from each prolongation at each end of each necked-down tank. These test specimen ring sections or prolongations shall be heat treated, with the necked-down tank which they represent. The width of the test specimen ring section must be at least its wall thickness. Only when diameters and wall thickness will not permit removal of 0.505 by 2-inch tensile test bar, laid in the transverse direction, may test bar cut in the longitudinal direction be substituted. When the thickness will not permit obtaining a 0.505 specimen, then the largest diameter specimen obtainable in the longitudinal direction shall be used. Specimens shall have bright surface and a reduced section. When 0.505 specimen is not used the gauge length shall be a ratio of 4 to 1 length to diameter.

(b) Elastic limit as determined by extensometer, shall not exceed 70 percent of tensile strength for class I steel or 85 percent of tensile strength for class II and class III steel. Determination shall be made at cross head speed of not more than 0.125 inch per minute with an extensometer reading to 0.0002 inch. The extensometer shall be read at increments of stress not exceeding 5,000 psi. The stress at which the strain first exceeds

stress (psi) /30,000,000 (psi) +0.005 (inches per inch)

shall be recorded as the elastic limit.

(1) Elongation shall be at least 18 percent and reduction of area at least 35 percent.

NOTE 1: Upon approval, the ratio of elastic limit to ultimate strength may be raised to permit use of special alloy steels of definite composition that will give equal or better physical properties than steels herein specified.

(2) [Reserved]

[Amdt. 179–8, 36 FR 18470, Sept. 15, 1971, as amended at 66 FR 45391, Aug. 28, 2001]

§ 179.500–8 Openings in tanks.

(a) Each end shall be closed by a cover made of forged steel. Covers shall be secured to ends of tank by through bolts or studs not entering interior of tank. Covers shall be of a thickness sufficient to meet test requirements of § 179.500–12 and to compensate for the openings closed by attachments prescribed herein.

(1) It is also provided that each end may be closed by internal threading to accommodate an approved fitting. The internal threads as well as the threads on fittings for these openings shall be clean cut, even, without checks, and tapped to gauge. Taper threads are required and shall be of a length not less than as specified for American Standard taper pipe threads. External threading of an approved type shall be permissible on the internal threaded ends.

(b) Joints between covers and ends and between cover and attachments shall be of approved form and made tight against vapor or liquid leakage by means of a confined gasket of suitable material.

§ 179.500–10 Protective housing.

(a) Safety devices, and loading and unloading valves on tanks shall be protected from accidental damage by approved metal housing, arranged so it may be readily opened to permit inspection and adjustment of safety relief devices and valves, and securely locked in closed position. Housing shall be provided with opening having an

opening equal to twice the total discharge area of pressure relief device enclosed.

(b) [Reserved]

[29 FR 18995, Dec. 29, 1964. Redesignated at 32 FR 5606, Apr. 5, 1967, and amended at 66 FR 45390, Aug. 28, 2001; 67 FR 61016, Sept. 27, 2002]

§ 179.500–11 Loading and unloading valves.

(a) Loading and unloading valve or valves shall be mounted on the cover or threaded into the marked end of tank. These valves shall be of approved type, made of metal not subject to rapid deterioration by lading or in service, and shall withstand without leakage a pressure equal to the marked test pressure of tank. Provision shall be made for closing service outlet of valves.

(b) [Reserved]

§ 179.500–12 Pressure relief devices.

(a) Tank shall be equipped with one or more pressure relief devices of approved type and discharge area, mounted on the cover or threaded into the non-marked end of the tank. If fittings are mounted on a cover, they shall be of the flanged type, made of metal not subject to rapid deterioration by lading or in service. Total flow capacity shall be such that, with tank filled with air at pressure equal to 70 percent of the marked test pressure of tank, flow capacity will be sufficient to reduce air pressure to 30 percent of the marked test pressure within 3 minutes after pressure relief device opens.

(b) Pressure relief devices shall open at a pressure not exceeding the marked test pressure of tank and not less than 7/10 of marked test pressure. (For tolerance for pressure relief valves, see § 179.500–16(a).)

(c) Cars used for the transportation of flammable gases shall have the safety devices equipped with an approved ignition device.

[Amdt. 179–32, 48 FR 27708, June 16, 1983, as amended at 66 FR 45391, Aug. 28, 2001; 68 FR 57634, Oct. 6, 2003]

§ 179.500–13 Fixtures.

(a) Attachments, other than those mounted on tank covers or serving as threaded closures for the ends of the tank, are prohibited.

(b) [Reserved]

§ 179.500–14 Test of tanks.

(a) After heat-treatment, tanks shall be subjected to hydrostatic tests in a water jacket, or by other accurate method, operated so as to obtain reliable data. No tank shall have been subjected previously to internal pressure greater than 90 percent of the marked test pressure. Each tank shall be tested to a pressure at least equal to the marked test pressure of the tank. Pressure shall be maintained for 30 seconds, and sufficiently longer to insure complete expansion of tank. Pressure gauge shall permit reading to accuracy of one percent. Expansion gauge shall permit reading of total expansion to accuracy of one percent. Expansion shall be recorded in cubic cm.

(b) No leaks shall appear and permanent volumetric expansion shall not exceed 10 percent of the total volumetric expansion at test pressure.

§ 179.500–15 Handling of tanks failing in tests.

(a) Tanks rejected for failure in any of the tests prescribed may be reheat-treated, and will be acceptable if subsequent to reheat-treatment they are subjected to and pass all of the tests.

(b) [Reserved]

§ 179.500–16 Tests of pressure relief devices.

(a) Pressure relief valves shall be tested by air or gas before being put into service. Valve shall open at pressure not exceeding the marked test pressure of tank and shall be vapor-tight at 80 percent of the marked test pressure. These limiting pressures shall not be affected by any auxiliary closure or other combination.

(b) For pressure relief devices that incorporate a rupture disc, samples of the discs used shall burst at a pressure not exceeding the marked test pressure of tank and not less than 7/10 of marked test pressure.

[Amdt. 179–32, 48 FR 27708, June 16, 1983, as amended at 66 FR 45391, Aug. 28, 2001]

§ 179.500–17 Marking.

(a) Each tank shall be plainly and permanently marked, thus certifying that tank complies with all requirements of this specification. These

marks shall be stamped into the metal of necked-down section of tank at marked end, in letters and figures at least ¼ inch high, as follows:

(1) Spec. DOT-107A * * * *, the * * * * to be replaced by figures indicating marked test pressure of the tank. This pressure shall not exceed the calculated maximum marked test pressure permitted, as determined by the formula in § 179.500–4(b).

(2) Serial number immediately below the stamped mark specified in paragraph (a)(1) of this section.

(3) Inspector's official mark immediately below the stamped mark specified in paragraph (a)(1) of this section.

(4) Name, mark (other than trademark), or initials of company or person for whose use tank is being made, which shall be recorded with the Bureau of Explosives.

(5) Date (such as 1–01, for January 2001) of tank test, so placed that dates of subsequent tests may easily be added.

(6) Date (such as 1–01, for January 2001) of latest test of pressure relief device or of the rupture disc, required only when tank is used for transportation of flammable gases.

(b) [Reserved]

[29 FR 18995, Dec. 29, 1964, as amended by Amdt. 179–52, 61 FR 28682, June 5, 1996; 66 FR 45391, Aug. 28, 2001]

§ 179.500–18 Inspection and reports.

(a) Before a tank car is placed in service, the party assembling the completed car shall furnish to car owner, Bureau of Explosives, and the Secretary, Mechanical Division, Association of American Railroads, a report in proper form certifying that tanks and their equipment comply with all the requirements of this specification and including information as to serial numbers, dates of tests, and ownership marks on tanks mounted on car structure.

(b) Purchaser of tanks shall provide for inspection by a competent inspector as follows:

(1) Inspector shall carefully inspect all material and reject that not complying with § 179.500–5.

(2) Inspector shall stamp his official mark on each forging or seamless tube accepted by him for use in making tanks, and shall verify proper application of heat number to such material by occasional inspections at steel manufacturer's plant.

(3) Inspector shall obtain certified chemical analysis of each heat of material.

(4) Inspector shall make inspection of inside surface of tanks before necking-down, to insure that no seams, cracks, laminations, or other defects exist.

(5) Inspector shall fully verify compliance with specification, verify heat treatment of tank as proper; obtain samples for all tests and check chemical analyses; witness all tests; and report minimum thickness of tank wall, maximum inside diameter, and calculated value of D, for each end of each tank as prescribed in § 179.500–4(c).

(6) Inspector shall stamp his official mark on each accepted tank immediately below serial number, and make certified report (see paragraph (c) of this section) to builder, to company or person for whose use tanks are being made, to builder of car structure on which tanks are to be mounted, to the Bureau of Explosives, and to the Secretary, Mechanical Division, Association of American Railroads.

(c) Inspector's report required herein shall be in the following form:

(Place) _____
(Date) _____

STEEL TANKS

It is hereby certified that drawings were submitted for these tanks under AAR Application for Approval _____ and approved by the AAR Committee on Tank Cars under date of _____.
Built for _____ Company
Location at _____
Built by _____ Company
Location at _____
Consigned to _____ Company
Location at _____
Quantity _____
Length (inches) _____
Outside diameter (inches) _____
Marks stamped into tank as required in § 179.500–17 are:

DOT-107A* * * *

NOTE 1: The marked test pressure substituted for the * * * * on each tank is shown on Record of General Data on Tanks attached hereto.

Serial numbers ____ to ____ inclusive
Inspector's mark _____

Owner's mark _____
Test date _____
Water capacity (see Record of Hydrostatic Tests).
Tare weights (yes or no) (see Record of Hydrostatic Tests).
These tanks were made by process of _____

Steel used was identified as indicated by the attached list showing the serial number of each tank, followed by the heat number.

Steel used was verified as to chemical analysis and record thereof is attached hereto. Heat numbers were stamped into metal. All material was inspected and each tank was inspected both before and after closing in ends; all material accepted was found free from seams, cracks, laminations, and other defects which might prove injurious to strength of tank. Processes of manufacture and heat-treatment of tanks were witnessed and found to be efficient and satisfactory.

Before necking-down ends, each tank was measured at each location prescribed in § 179.500–4(c) and minimum wall thickness in inches at each location was recorded; maximum inside diameter in inches at each location was recorded; value of D in inches at each location was calculated and recorded; maximum fiber stress in wall at location showing larger value for

$(D^2+d^2)/(D^2-d^2)$

was calculated for 7/10 the marked test pressure and recorded. Calculations were made by the formula:

$S=[0.7P(D^2-d^2)/(D^2+d^2)]$

Hydrostatic tests, tensile test of material, and other tests as prescribed in this specification, were made in the presence of the inspector, and all material and tanks accepted were found to be in compliance with the requirements of this specification. Records thereof are attached hereto.

I hereby certify that all of these tanks proved satisfactory in every way and comply with the requirements of Department of Transportation Specification No. 107A* * * *.

(Signed) _____
(Inspector)
(Place) _____
(Date) _____

RECORD OF CHEMICAL ANALYSIS OF STEEL FOR TANKS

Numbered _____ to _____ inclusive
Size __ inches outside diameter by __ inches long
Built by _____ Company
For _____ Company

Heat No.	Tanks represented (serial Nos.)	Chemical analysis							
		C	Mn	P	S	Si	Ni	Cr	Mo

These analyses were made by
(Signed) _____
(Place) _____
(Date) _____

RECORD OF CHEMICAL ANALYSIS OF STEEL IN TANKS

Numbered _____ to _____ inclusive
Size ____ inches outside by ____ inches long
Built by _____ Company
For _____ Company

Heat No.	Tanks represented by test (serial Nos.)	Elastic limit (psi)	Tensile strength (psi)	Elongation (percent in 2 inches)	Reduction of area (percent)

(Signed) _____
(Place) _____
(Date) _____

RECORD OF HYDROSTATIC TESTS ON TANKS

Numbered ..... to ..... inclusive
Size ..... inches outside by .... inches long
Built by ..... Company
For ..... Company

Serial Nos. of tanks	Actual test pressure (psig)	Total expansion (cubic cm)	Permanent expansion (cubic cm)	Percent ratio of permanent expansion to total expansion [1]	Tare weight (pounds) [2]	Capacity in pounds of water at 60 °F

[1] If tests are made by method involving measurement of amount of liquid forced into tank by test pressure, then the basic data on which calculations are made, such as pump factors, temperature of liquid, coefficient of compressibility of liquid, etc., must also be given.
[2] Do not include protective housing, but state whether with or without valves.

(Signed) _____ (Date) _____

(Place) _____

RECORD OF GENERAL DATA ON TANKS

Numbered ..... to ..... inclusive
Built by ..... Company
For ..... Company

Data obtained as prescribed in § 179.500–4(c)							Larger value of the factor D^2+d^2/D^2-d^2	(S) Calculated fiber stress in psi at 7/10 marked test pressure	Marked test pressure in psig stamped in tank	Minimum tensile strength of material in psi recorded
Marked end of tank				Other end of tank						
Serial No. of tank	(t) Min. thickness of wall in inches	(d) Max. inside diameter in inches	(D) Calculated value of *D* in inches=*d*+2t	(t) Minimum thickness of wall in inches	(d) Maximum inside diameter in inches	(*D*) calculated value of *D* in inches=*d*+2t				

(Signed) _____

[Amdt. 179–32, 48 FR 27708, June 16, 1983, as amended by 66 FR 45391, Aug. 28, 2001]

APPENDIX A TO PART 179—PROCEDURES FOR TANK-HEAD PUNCTURE-RESISTANCE TEST

1. This test procedure is designed to verify the integrity of new or untried tank-head puncture-resistance systems and to test for system survivability after coupler-to-tank-head impacts at relative speeds of 29 km/hour (18 mph). Tank-head puncture-resistance is a function of one or more of the following: Head thickness, jacket thickness, insulation thickness, and material of construction.

2. *Tank-head puncture-resistance test.* A tank-head puncture-resistance system must be tested under the following conditions:

a. The ram car used must weigh at least 119,295 kg (263,000 pounds), be equipped with a coupler, and duplicate the condition of a conventional draft sill including the draft yoke and draft gear. The coupler must protrude from the end of the ram car so that it is the leading location of perpendicular contact with the impacted test car.

b. The impacted test car must be loaded with water at six percent outage with internal pressure of at least 6.9 Bar (100 psig) and coupled to one or more ''backup'' cars which have a total weight of 217,724 kg (480,000 pounds) with hand brakes applied on the last ''backup'' car.

c. At least two separate tests must be conducted with the coupler on the vertical centerline of the ram car. One test must be conducted with the coupler at a height of 53.3 cm (21 inches), plus-or-minus 2.5 cm (1 inch), above the top of the sill; the other test must be conducted with the coupler height at 79 cm (31 inches), plus-or-minus 2.5 cm (1 inch), above the top of the sill. If the combined thickness of the tank head and any additional shielding material is less than the combined thickness on the vertical centerline of the car, a third test must be conducted with the coupler positioned so as to strike the thinnest point of the tank head.

3. One of the following test conditions must be applied:

Minimum weight of attached ram cars in kg (pounds)	Minimum velocity of impact in km/hour (mph)	Restrictions
119,295 (263,000) ...	29 (18)	One ram car only.
155,582 (343,000) ...	25.5 (16)	One ram car or one car plus one rigidly attached car.
311,164 (686,000) ...	22.5 (14)	One ram car plus one or more rigidly attached cars.

4. A test is successful if there is no visible leak from the standing tank car for at least one hour after impact.

[Amdt. 179–50, 60 FR 49078, Sept. 21, 1995, as amended by Amdt. 179–50, 61 FR 33256, June 26, 1996; 66 FR 45390–45391, Aug. 28, 2001]

APPENDIX B TO PART 179—PROCEDURES FOR SIMULATED POOL AND TORCH-FIRE TESTING

1. This test procedure is designed to measure the thermal effects of new or untried thermal protection systems and to test for system survivability when exposed to a 100-minute pool fire and a 30-minute torch fire.

2. *Simulated pool fire test.*

a. A pool-fire environment must be simulated in the following manner:

(1) The source of the simulated pool fire must be hydrocarbon fuel with a flame temperature of 871 °C plus or minus 55.6 °C (1600 °F plus-or-minus 100 °F) throughout the duration of the test.

(2) A square bare plate with thermal properties equivalent to the material of construction of the tank car must be used. The plate dimensions must be not less than one foot by one foot by nominal 1.6 cm (0.625 inch) thick. The bare plate must be instrumented with not less than nine thermocouples to record the thermal response of the bare plate. The thermocouples must be attached to the surface not exposed to the simulated pool fire and must be divided into nine equal squares with a thermocouple placed in the center of each square.

(3) The pool-fire simulator must be constructed in a manner that results in total flame engulfment of the front surface of the bare plate. The apex of the flame must be directed at the center of the plate.

(4) The bare plate holder must be constructed in such a manner that the only heat transfer to the back side of the bare plate is by heat conduction through the plate and not by other heat paths.

(5) Before the bare plate is exposed to the simulated pool fire, none of the temperature recording devices may indicate a plate temperature in excess of 37.8 °C (100 °F) nor less than 0 °C (32 °F).

(6) A minimum of two thermocouple devices must indicate 427 °C (800 °F) after 13 minutes, plus-or-minus one minute, of simulated pool-fire exposure.

b. A thermal protection system must be tested in the simulated pool-fire environment described in paragraph 2a of this appendix in the following manner:

(1) The thermal protection system must cover one side of a bare plate as described in paragraph 2a(2) of this appendix.

(2) The non-protected side of the bare plate must be instrumented with not less than nine thermocouples placed as described in paragraph 2a(2) of this appendix to record the thermal response of the plate.

(3) Before exposure to the pool-fire simulation, none of the thermocouples on the thermal protection system configuration may indicate a plate temperature in excess of 37.8 °C (100 °F) nor less than 0 °C (32 °F).

(4) The entire surface of the thermal protection system must be exposed to the simulated pool fire.

(5) A pool-fire simulation test must run for a minimum of 100 minutes. The thermal protection system must retard the heat flow to the plate so that none of the thermocouples on the non-protected side of the plate indicate a plate temperature in excess of 427 °C (800 °F).

(6) A minimum of three consecutive successful simulation fire tests must be performed for each thermal protection system.

3. *Simulated torch fire test.*

a. A torch-fire environment must be simulated in the following manner:

(1) The source of the simulated torch must be a hydrocarbon fuel with a flame temperature of 1,204 °C plus-or-minus 55.6 °C (2,200 °F plus or minus 100 °F), throughout the duration of the test. Furthermore, torch velocities must be 64.4 km/h ±16 km/h (40 mph ±10 mph) throughout the duration of the test.

(2) A square bare plate with thermal properties equivalent to the material of construction of the tank car must be used. The plate dimensions must be at least four feet by four feet by nominal 1.6 cm (0.625 inch) thick. The bare plate must be instrumented with not less than nine thermocouples to record the thermal response of the plate. The thermocouples must be attached to the surface not exposed to the simulated torch and must be divided into nine equal squares with a thermocouple placed in the center of each square.

(3) The bare plate holder must be constructed in such a manner that the only heat transfer to the back side of the plate is by heat conduction through the plate and not by other heat paths. The apex of the flame must be directed at the center of the plate.

(4) Before exposure to the simulated torch, none of the temperature recording devices may indicate a plate temperature in excess of 37.8 °C (100 °F) or less than 0 °C (32 °F).

(5) A minimum of two thermocouples must indicate 427 °C (800 °F) in four minutes, plus-or-minus 30 seconds, of torch simulation exposure.

b. A thermal protection system must be tested in the simulated torch-fire environment described in paragraph 3a of this appendix in the following manner:

(1) The thermal protection system must cover one side of the bare plate identical to that used to simulate a torch fire under paragraph 3a(2) of this appendix.

(2) The back of the bare plate must be instrumented with not less than nine thermocouples placed as described in paragraph 3a(2) of this appendix to record the thermal response of the material.

(3) Before exposure to the simulated torch, none of the thermocouples on the back side

of the thermal protection system configuration may indicate a plate temperature in excess of 37.8 °C (100 °F) nor less than 0 °C (32 °F).

(4) The entire outside surface of the thermal protection system must be exposed to the simulated torch-fire environment.

(5) A torch-simulation test must be run for a minimum of 30 minutes. The thermal protection system must retard the heat flow to the plate so that none of the thermocouples on the backside of the bare plate indicate a plate temperature in excess of 427 °C (800 °F).

(6) A minimum of two consecutive successful torch-simulation tests must be performed for each thermal protection system.

[Amdt. 179–50, 60 FR 49078, Sept. 21, 1995, as amended at 75 FR 53597, Sept. 1, 2010; 77 FR 60945, Oct. 5, 2012]

PART 180—CONTINUING QUALIFICATION AND MAINTENANCE OF PACKAGINGS

Subpart A—General

Sec.
180.1 Purpose and scope.
180.2 Applicability.
180.3 General requirements.

Subpart B [Reserved]

Subpart C—Qualification, Maintenance and Use of Cylinders

180.201 Applicability.
180.203 Definitions.
180.205 General requirements for requalification of specification cylinders.
180.207 Requirements for requalification of UN pressure receptacles.
180.209 Requirements for requalification of specification cylinders.
180.211 Repair, rebuilding and reheat treatment of DOT-4 series specification cylinders.
180.212 Repair of seamless DOT 3-series specification cylinders and seamless UN pressure receptacles.
180.213 Requalification markings.
180.215 Reporting and record retention requirements.
180.217 Requalification requirements for MEGCs.

Subpart D—Qualification and Maintenance of IBCs

180.350 Applicability and definitions.
180.351 Qualification of IBCs.
180.352 Requirements for retest and inspection of IBCs.

Subpart E—Qualification and Maintenance of Cargo Tanks

180.401 Applicability.
180.403 Definitions.
180.405 Qualification of cargo tanks.
180.407 Requirements for test and inspection of specification cargo tanks.
180.409 Minimum qualifications for inspectors and testers.
180.411 Acceptable results of tests and inspections.
180.413 Repair, modification, stretching, rebarrelling, or mounting of specification cargo tanks.
180.415 Test and inspection markings.
180.416 Discharge system inspection and maintenance program for cargo tanks transporting liquefied compressed gases.
180.417 Reporting and record retention requirements.

Subpart F—Qualification and Maintenance of Tank Cars

180.501 Applicability.
180.503 Definitions.
180.505 Quality assurance program.
180.507 Qualification of tank cars.
180.509 Requirements for inspection and test of specification tank cars.
180.511 Acceptable results of inspections and tests.
180.513 Repairs, alterations, conversions, and modifications.
180.515 Markings.
180.517 Reporting and record retention requirements.
180.519 Periodic retest and inspection of tank cars other than single-unit tank car tanks.

Subpart G—Qualification and Maintenance of Portable Tanks

180.601 Applicability.
180.603 Qualification of portable tanks.
180.605 Requirements for periodic testing, inspection and repair of portable tanks.

APPENDIX A TO PART 180—INTERNAL SELF-CLOSING STOP VALVE EMERGENCY CLOSURE TEST FOR LIQUEFIED COMPRESSED GASES

APPENDIX B TO PART 180—ACCEPTABLE INTERNAL SELF-CLOSING STOP VALVE LEAKAGE TESTS FOR CARGO TANKS TRANSPORTING LIQUEFIED COMPRESSED GASES

APPENDIX C TO PART 180—EDDY CURRENT EXAMINATION WITH VISUAL INSPECTION FOR DOT 3AL CYLINDERS MANUFACTURED OF ALUMINUM ALLOY 6351–T6

APPENDIX D TO PART 180—HAZARDOUS MATERIALS CORROSIVE TO TANKS OR SERVICE EQUIPMENT

AUTHORITY: 49 U.S.C. 5101–5128; 49 CFR 1.81 and 1.97.

SOURCE: Amdt. 180–2, 54 FR 25032, June 12, 1989, unless otherwise noted.

Subpart A—General

§ 180.1 Purpose and scope.

This part prescribes requirements pertaining to the maintenance, reconditioning, repair, inspection and testing of packagings, and any other function having an effect on the continuing qualification and use of a packaging under the requirements of this subchapter.

§ 180.2 Applicability.

(a) Any person who performs a function prescribed in this part shall perform that function in accordance with this part.

(b) Any person who performs a function prescribed in this part is considered subject to the regulations of this subchapter when that person—

(1) Makes any representation indicating compliance with one or more of the requirements of this part; or

(2) Reintroduces into commerce a packaging that bears markings indicating compliance with this part.

[Amdt. 180–2, 54 FR 25032, June 12, 1989, as amended by Amdt. 180–2, 56 FR 27877, June 17, 1991]

§ 180.3 General requirements.

(a) No person may represent, mark, certify, sell, or offer a packaging or container as meeting the requirements of this part, or a special permit pertaining to this part issued under subchapter A of this chapter, whether or not the packaging or container is intended to be used for the transportation of a hazardous material, unless it is marked, maintained, reconditioned, repaired, or retested, as appropriate, in accordance with this part, an approval issued thereunder, or a special permit issued under subchapter A of this chapter.

(b) The representations, markings, and certifications subject to the prohibitions of paragraph (a) of this section include:

(1) Identifications that include the letters ''DOT'', ''MC'', ''ICC'', or ''UN'';

(2) Special permit, approval, and registration numbers that include the letters ''DOT'';

(3) Test dates displayed in association with specification, registration, approval, or exemption markings indicating conformance to a test or retest requirement of this subchapter, an approval issued thereunder, or a special permit issued under subchapter A of this chapter;

(4) Documents indicating conformance to the testing, inspection, maintenance or other continuing qualification requirements of this part; and

(5) Sales literature, including advertising, indicating that the packaging or container represented therein conforms to requirements contained in subchapter A or C of this chapter.

[Amdt. 180–2, 54 FR 25032, June 12, 1989, as amended by Amdt. 180–3, 58 FR 33306, June 16, 1993; 70 FR 73166, Dec. 9, 2005]

Subpart B [Reserved]

Subpart C—Qualification, Maintenance and Use of Cylinders

SOURCE: 67 FR 51660, Aug. 8, 2002, unless otherwise noted.

§ 180.201 Applicability.

This subpart prescribes requirements, in addition to those contained in parts 107, 171, 172, 173, and 178 of this chapter, for the continuing qualification, maintenance, or periodic requalification of DOT specification and exemption cylinders and UN pressure receptacles.

[71 FR 33894, June 12, 2006]

§ 180.203 Definitions.

As used in this section, the word ''cylinder'' includes UN pressure receptacles. In addition to the definitions contained in § 171.8 of this subchapter, the following definitions apply to this subpart:

Commercially free of corrosive components means a hazardous material having a dew point at or below minus 46.7 °C (minus 52 °F) at 101kPa (1 atmosphere) and free of components that will adversely react with the cylinder (e.g. chemical stress corrosion).

Condemn means a determination that a cylinder is unserviceable for the continued transportation of hazardous materials in commerce and that the cylinder may not be restored by repair, rebuilding, requalification, or any other procedure.

Defect means an imperfection requiring removal of a cylinder from service.

Elastic expansion means a temporary increase in a cylinder's volume, due to application of pressure, that is lost when pressure is released (elastic expansion = total expansion minus permanent expansion).

Filled or *charged* means an introduction or presence of a hazardous material in a cylinder.

Non-corrosive service means a hazardous material that, in the presence of moisture, is not corrosive to the materials of construction of a cylinder (including valve, pressure relief device, etc.).

Over-heated means a condition in which the temperature of any portion of an aluminum cylinder has reached 176 °C (350 °F) or higher, or in which the temperature of any portion of a steel or nickel cylinder has reached 343 °C (650 °F) or higher.

Permanent expansion means a permanent increase in a cylinder's volume after the test pressure is released.

Proof pressure test means a pressure test by interior pressurization without the determination of a cylinder's expansion.

Rebuild means the replacement of a pressure part (e.g. a wall, head, or pressure fitting) by welding.

Rejected cylinder means a cylinder that cannot be used for the transportation of a hazardous material in commerce without repair, rebuilding, and requalification.

Repair means a procedure for correction of a rejected cylinder that may involve welding.

Requalification means the completion of a visual inspection and/or the test(s) required to be performed on a cylinder to determine its suitability for continued service.

Requalification identification number or RIN means a code assigned by DOT to uniquely identify a cylinder requalification, repair, or rebuilding facility.

Test pressure means the pressure used for the requalification of a cylinder.

Total expansion means the total increase in a cylinder's volume due to application of the test pressure.

Visual inspection means an internal or external visual examination, or both, performed as part of the cylinder requalification process.

Volumetric expansion test means a pressure test to determine the total and permanent expansion of a cylinder at a given pressure. The *volumetric expansion test* is conducted using the water jacket or direct expansion methods:

(1) *Water jacket method* means a volumetric expansion test to determine a cylinder's total and permanent expansion by measuring the difference between the volume of water the cylinder externally displaces at test pressure and the volume of water the cylinder externally displaces at ambient pressure.

(2) *Direct expansion method* means a volumetric expansion test to calculate a cylinder's total and permanent expansion by measuring the amount of water forced into a cylinder at test pressure, adjusted for the compressibility of water, as a means of determining the expansion.

[67 FR 51660, Aug. 8, 2002, as amended at 71 FR 33894, June 12, 2006]

§ 180.205 General requirements for requalification of specification cylinders.

(a) *General.* Each cylinder used for the transportation of hazardous materials must be an authorized packaging. To qualify as an authorized packaging, each cylinder must conform to this subpart, the applicable requirements specified in part 173 of this subchapter, and the applicable requirements of subpart C of part 178 of this subchapter.

(b) *Persons performing requalification functions.* No person may represent that a repair or requalification of a cylinder has been performed in accordance with the requirements in this subchapter unless that person holds a current approval issued under the procedural requirements prescribed in subpart I of part 107 of this chapter. No person may mark a cylinder with a

RIN and a requalification date or otherwise represent that a DOT specification or special permit cylinder has been requalified unless all applicable requirements of this subpart have been met. A person who requalifies cylinders must maintain the records prescribed in § 180.215 at each location at which it inspects, tests, or marks cylinders.

(c) *Periodic requalification of cylinders.* Each cylinder bearing a DOT specification marking must be requalified and marked as specified in the Requalification Table in this subpart. Each cylinder bearing a DOT special permit number must be requalified and marked in conformance with this section and the terms of the applicable special permit. No cylinder may be filled with a hazardous material and offered for transportation in commerce unless that cylinder has been successfully requalified and marked in accordance with this subpart. A cylinder may be requalified at any time during or before the month and year that the requalification is due. However, a cylinder filled before the requalification becomes due may remain in service until it is emptied. A cylinder with a specified service life may not be refilled and offered for transportation after its authorized service life has expired.

(1) Each cylinder that is requalified in accordance with the requirements specified in this section must be marked in accordance with § 180.213.

(2) Each cylinder that fails requalification must be:

(i) Rejected and may be repaired or rebuilt in accordance with § 180.211 or § 180.212, as appropriate; or

(ii) Condemned in accordance with paragraph (i) of this section.

(3) For DOT specification cylinders, the marked service pressure may be changed upon approval of the Associate Administrator and in accordance with written procedures specified in the approval.

(4) For a specification 3, 3A, 3AA, 3AL, 3AX, 3AXX, 3B, 3BN, or 3T cylinder filled with gases in other than Division 2.2, from the first requalification due on or after December 31, 2003, the burst pressure of a CG–1, CG–4, or CG–5 pressure relief device must be at test pressure with a tolerance of plus zero to minus 10%. An additional 5% tolerance is allowed when a combined rupture disc is placed inside a holder. This requirement does not apply if a CG–2, CG–3 or CG–9 thermally activated relief device or a CG–7 reclosing pressure valve is used on the cylinder.

(d) *Conditions requiring test and inspection of cylinders.* Without regard to any other periodic requalification requirements, a cylinder must be tested and inspected in accordance with this section prior to further use if—

(1) The cylinder shows evidence of dents, corrosion, cracked or abraded areas, leakage, thermal damage, or any other condition that might render it unsafe for use in transportation;

(2) The cylinder has been in an accident and has been damaged to an extent that may adversely affect its lading retention capability;

(3) The cylinder shows evidence of or is known to have been over-heated; or

(4) The Associate Administrator determines that the cylinder may be in an unsafe condition.

(e) *Cylinders containing Class 8 (corrosive) liquids.* A cylinder previously containing a Class 8 (corrosive) liquid may not be used to transport a Class 2 material in commerce unless the cylinder is—

(1) Visually inspected, internally and externally, in accordance with paragraph (f) of this section and the inspection is recorded as prescribed in § 180.215;

(2) Requalified in accordance with this section, regardless of the date of the previous requalification;

(3) Marked in accordance with § 180.213; and

(4) Decontaminated to remove all significant residue or impregnation of the Class 8 material.

(f) *Visual inspection.* Except as otherwise provided in this subpart, each time a cylinder is pressure tested, it must be given an internal and external visual inspection.

(1) The visual inspection must be performed in accordance with the following CGA Pamphlets: C–6 for steel and nickel cylinders (IBR, see § 171.7 of this subchapter); C–6.1 for seamless aluminum cylinders (IBR, see § 171.7 of

this subchapter); C–6.2 for fiber reinforced composite special permit cylinders (IBR, see §171.7 of this subchapter); C–6.3 for low pressure aluminum cylinders (IBR, see §171.7 of this subchapter); C–8 for DOT 3HT cylinders (IBR, see §171.7 of this subchapter); and C–13 for DOT 8 series cylinders (IBR, see §171.7 of this subchapter).

(2) For each cylinder with a coating or attachments that would inhibit inspection of the cylinder, the coating or attachments must be removed before performing the visual inspection.

(3) Each cylinder subject to visual inspection must be approved, rejected, or condemned according to the criteria in the applicable CGA pamphlet.

(4) In addition to other requirements prescribed in this paragraph (f), each specification cylinder manufactured of aluminum alloy 6351–T6 and used in self-contained underwater breathing apparatus (SCUBA), self-contained breathing apparatus (SCBA), or oxygen service must be inspected for sustained load cracking in accordance with Appendix C of this part at the first scheduled 5-year requalification period after January 1, 2007, and every five years thereafter.

(g) *Pressure test.* (1) Unless otherwise provided, each cylinder required to be retested under this subpart must be retested by means suitable for measuring the expansion of the cylinder under pressure. Bands and other removable attachments must be loosened or removed before testing so that the cylinder is free to expand in all directions.

(2) The pressure indicating device of the testing apparatus must permit reading of pressures to within 1% of the minimum prescribed test pressure of each cylinder tested, except that for an analog device, interpolation to ½ of the marked gauge divisions is acceptable. The expansion-indicating device of the testing apparatus must also permit incremental reading of the cylinder expansion to 1% of the total expansion of each cylinder tested or 0.1 cc, whichever is larger. Midpoint visual interpolation is permitted.

(3) Each day before retesting, the retester shall confirm, by using a calibrated cylinder or other method authorized in writing by the Associate Administrator, that:

(i) The pressure-indicating device, as part of the retest apparatus, is accurate within ±1.0% of the prescribed test pressure of any cylinder tested that day. The pressure indicating device, itself, must be certified as having an accuracy of ±0.5%, or better, of its full range, and must permit readings of pressure from 90%-110% of the minimum prescribed test pressure of the cylinder to be tested. The accuracy of the pressure indicating device within the test system can be demonstrated at any point within 500 psig of the actual test pressure for test pressures at or above 3000 psig, or 10% of the actual test pressure for test pressures below 3000 psig.

(ii) The expansion-indicating device, as part of the retest apparatus, gives a stable reading of expansion and is accurate to ±1.0% of the total expansion of any cylinder tested or 0.1 cc, whichever is larger. The expansion-indicating device itself must have an accuracy of ±0.5%, or better, of its full scale.

(4) The test equipment must be verified to be accurate within ±1.0% of the calibrated cylinder's pressure and corresponding expansion values. This may be accomplished by bringing the pressure to a value shown on the calibration certificate for the calibrated cylinder used and verifying that the resulting total expansion is within ±1.0% of the total expansion shown on the calibration certificate. Alternatively, calibration may be demonstrated by bringing the total expansion to a known value on the calibration certificate for the calibrated cylinder used and verifying that the resulting pressure is within ±1.0% of the pressure shown on the calibration certificate. The calibrated cylinder must show no permanent expansion. The retester must demonstrate calibration in conformance with this paragraph (g) to an authorized inspector on any day that it retests cylinders. A retester must maintain calibrated cylinder certificates in conformance with §180.215(b)(4).

(5) Minimum test pressure must be maintained for at least 30 seconds, and as long as necessary for complete expansion of the cylinder. A system

check may be performed at or below 90% of test pressure prior to the retest. In the case of a malfunction of the test equipment, the test may be repeated at a pressure increased by 10% or 100 psig, whichever is less. This paragraph (g) does not authorize retest of a cylinder otherwise required to be condemned under paragraph (i) of this section.

(6) Training materials may be used for training persons who requalify cylinders using the volumetric expansion test method.

(h) *Cylinder rejection*. A cylinder must be rejected when, after a visual inspection, it meets a condition for rejection under the visual inspection requirements of paragraph (f) of this section.

(1) Except as provided in paragraphs (h)(3) and (h)(4) of this section, a cylinder that is rejected may not be marked as meeting the requirements of this section.

(2) The requalifier must notify the cylinder owner, in writing, that the cylinder has been rejected.

(3) Unless the cylinder is requalified in conformance with requirements in § 180.211, it may not be filled with a hazardous material and offered for transportation in commerce where use of a specification packaging is required.

(4) A rejected cylinder with a service pressure of less than 900 psig may be requalified and marked if the cylinder is repaired or rebuilt and subsequently inspected and tested in conformance with—

(i) The visual inspection requirements of paragraph (f) of this section;

(ii) Part 178 of this subchapter and this part;

(iii) Any special permit covering the manufacture, requalification, and/or use of that cylinder; and

(iv) Any approval required under § 180.211.

(i) *Cylinder condemnation*. (1) A cylinder must be condemned when—

(i) The cylinder meets a condition for condemnation under the visual inspection requirements of paragraph (f) of this section.

(ii) The cylinder leaks through its wall.

(iii) Evidence of cracking exists to the extent that the cylinder is likely to be weakened appreciably.

(iv) For a DOT specification cylinder, other than a DOT 4E aluminum cylinder or a special permit cylinder, permanent expansion exceeds 10 percent of total expansion.

(v) For a DOT 3HT cylinder—

(A) The pressure test yields an elastic expansion exceeding the marked rejection elastic expansion (REE) value.

(B) The cylinder shows evidence of denting or bulging.

(C) The cylinder bears a manufacture or an original test date older than twenty-four years or after 4380 pressurizations, whichever occurs first. If a cylinder is refilled, on average, more than once every other day, an accurate record of the number of rechargings must be maintained by the cylinder owner or the owner's agent.

(vi) For a DOT 4E aluminum cylinder, permanent expansion exceeds 12 percent of total expansion.

(vii) For a DOT special permit cylinder, permanent expansion exceeds the limit in the applicable special permit, or the cylinder meets another criterion for condemnation in the applicable special permit.

(viii) For an aluminum or an aluminum-lined composite special permit cylinder, the cylinder is known to have been or shows evidence of having been over-heated.

(2) When a cylinder must be condemned, the requalifier must—

(i) Stamp a series of X's over the DOT specification number and the marked pressure or stamp ''CONDEMNED'' on the shoulder, top head, or neck using a steel stamp;

(ii) For composite cylinders, securely affix to the cylinder a label with the word ''CONDEMNED'' overcoated with epoxy near, but not obscuring, the original cylinder manufacturer's label; or

(iii) As an alternative to the stamping or labeling as described in this paragraph (i)(2), at the direction of the owner, the requalifier may render the cylinder incapable of holding pressure.

(3) No person may remove or obliterate the ''CONDEMNED'' marking. In addition, the requalifier must notify the cylinder owner, in writing, that the cylinder is condemned and may not be filled with hazardous material and offered for transportation in commerce

where use of a specification packaging is required.

[67 FR 51660, Aug. 8, 2002, as amended at 68 FR 24662, May 8, 2003; 68 FR 75764, Dec. 31, 2003; 70 FR 34077, June 13, 2005; 70 FR 73166, Dec. 9, 2005; 71 FR 51128, Aug. 29, 2006; 73 FR 4720, Jan. 28, 2008; 75 FR 53597, Sept. 1, 2010]

§ 180.207 Requirements for requalification of UN pressure receptacles.

(a) *General*. (1) Each UN pressure receptacle used for the transportation of hazardous materials must conform to the requirements prescribed in paragraphs (a), (b) and (d) in § 180.205.

(2) No pressure receptacle due for requalification may be filled with a hazardous material and offered for transportation in commerce unless that pressure receptacle has been successfully requalified and marked in accordance with this subpart. A pressure receptacle may be requalified at any time during or before the month and year that the requalification is due. However, a pressure receptacle filled before the requalification becomes due may remain in service until it is emptied.

(3) No person may requalify a UN composite pressure receptacle for continued use beyond its 15-years authorized service life. A pressure receptacle with a specified service life may not be refilled and offered for transportation after its authorized service life has expired unless approval has been obtained in writing from the Associate Administrator.

(b) *Periodic requalification of UN pressure receptacles*. (1) Each pressure receptacle that is successfully requalified in accordance with the requirements specified in this section must be marked in accordance with § 180.213. The requalification results must be recorded in accordance § 180.215.

(2) Each pressure receptacle that fails requalification must be rejected or condemned in accordance with the applicable ISO requalification standard.

(c) *Requalification interval*. Each UN pressure receptacle that becomes due for periodic requalification must be requalified at the interval specified in the following table:

TABLE 1—REQUALIFICATION INTERVALS OF UN PRESSURE RECEPTACLES

Interval (years)	UN pressure receptacles/hazardous materials
10	Pressure receptacles for all hazardous materials except as noted below (also for dissolved acetylene, see paragraph (d)(3) of this section):
5	Composite pressure receptacles.
5	Metal hydride storage systems
5	Pressure receptacles used for: All Division 2.3 materials. UN1013, Carbon dioxide. UN1043, Fertilizer ammoniating solution with free ammonia. UN1051, Hydrogen cyanide, stabilized containing less than 3% water. UN1052, Hydrogen fluoride, anhydrous. UN1745, Bromine pentafluoride. UN1746, Bromine trifluoride. UN2073, Ammonia solution. UN2495, Iodine pentafluoride. UN2983, Ethylene Oxide and Propylene oxide mixture, not more than 30% ethylene oxide.

(d) *Requalification procedures*. Each UN pressure receptacle that becomes due for requalification must be requalified at the interval prescribed in paragraph (c) of this section and in accordance with the procedures contained in the following standard, as applicable. When a pressure test is performed on a UN pressure receptacle, the test must be a water jacket volumetric expansion test suitable for the determination of the cylinder expansion or a hydraulic proof pressure test. The test equipment must conform to the accuracy requirements in § 180.205(g). Alternative methods (e.g., acoustic emission) or requalification procedures may be performed if prior approval has been obtained in writing from the Associate Administrator.

(1) Seamless steel: Each seamless steel UN pressure receptacle, including MEGC's pressure receptacles, must be requalified in accordance with ISO 6406

(IBR, *see* § 171.7 of this subchapter). However, UN cylinders with a tensile strength greater than or equal to 950 MPa must be requalified by ultrasonic examination in accordance with ISO 6406.

(2) Seamless UN aluminum: Each seamless aluminum UN pressure receptacle must be requalified in accordance with ISO 10461 (IBR, see § 171.7 of this subchapter).

(3) Dissolved acetylene UN cylinders: Each dissolved acetylene cylinder must be requalified in accordance with ISO 10462 (IBR, see § 171.7 of this subchapter). The porous mass and the shell must be requalified no sooner than 3 years, 6 months, from the date of manufacture. Thereafter, subsequent requalifications of the porous mass and shell must be performed at least once every ten years.

(4) Composite UN cylinders: Each composite cylinder must be inspected and tested in accordance with ISO 11623 (IBR, see § 171.7 of this subchapter).

[71 FR 33894, June 12, 2006, as amended at 71 FR 54397, Sept. 14, 2006; 76 FR 3389, Jan.19, 2011]

§ 180.209 Requirements for requalification of specification cylinders.

(a) *Periodic qualification of cylinders.* Each specification cylinder that becomes due for periodic requalification, as specified in the following table, must be requalified and marked in conformance with the requirements of this subpart. Requalification records must be maintained in accordance with § 180.215. Table 1 follows:

TABLE 1—REQUALIFICATION OF CYLINDERS [1]

Specification under which cylinder was made	Minimum test pressure (psig) [2]	Requalification period (years)
DOT 3	3000 psig	5
DOT 3A, 3AA	5/3 times service pressure, except non-corrosive service (*see* § 180.209(g)).	5, 10, or 12 (*see* § 180.209(b), (f), (h), and (j)
DOT 3AL	5/3 times service pressure	5 or 12 (see § 180.209(j) and § 180.209(m) [3]).
DOT 3AX, 3AAX	5/3 times service pressure	5
3B, 3BN	2 times service pressure (*see* § 180.209(g)).	5 or 10 (see § 180.209(f))
3E	Test not required.	
3HT	5/3 times service pressure	3 (*see* §§ 180.209(k) and 180.213(c))
3T	5/3 times service pressure	5
4AA480	2 times service pressure (*see* § 180.209(g)).	5 or 10 (*see* § 180.209(h))
4B, 4BA, 4BW, 4B–240ET	2 times service pressure, except non-corrosive service (*see* § 180.209(g)).	5, 10, or 12 (*see* § 180.209(e), (f), and (j))
4D, 4DA, 4DS	2 times service	5
DOT 4E	2 times service pressure, except non-corrosive (*see* § 180.209(g)).	5
4L	Test not required.	
8, 8AL		10 or 20 (*see* § 180.209(i))
Exemption or special permit cylinder	See current exemption or special permit	See current exemption or special permit
Foreign cylinder (see § 173.301(j) of this subchapter for restrictions on use).	As marked on cylinder, but not less than ⅝ of any service or working pressure marking.	5 (*see* §§ 180.209(l) and 180.213(d)(2))

[1] Any cylinder not exceeding 2 inches outside diameter and less than 2 feet in length is excepted from volumetric expansion test.
[2] For cylinders not marked with a service pressure, see § 173.301a(b) of this subchapter.

(b) *DOT 3A or 3AA cylinders.* (1) A cylinder conforming to specification DOT 3A or 3AA with a water capacity of 56.7 kg (125 lb) or less that is removed from any cluster, bank, group, rack, or vehicle each time it is filled, may be requalified every ten years instead of every five years, provided the cylinder conforms to all of the following conditions:

(i) The cylinder was manufactured after December 31, 1945.

(ii) The cylinder is used exclusively for air; argon; cyclopropane; ethylene; helium; hydrogen; krypton; neon; nitrogen; nitrous oxide; oxygen; sulfur hexafluoride; xenon; chlorinated hydrocarbons, fluorinated hydrocarbons, liquefied hydrocarbons, and mixtures thereof that are commercially free

from corroding components; permitted mixtures of these gases (*see* § 173.301(d) of this subchapter); and permitted mixtures of these gases with up to 30 percent by volume of carbon dioxide, provided the gas has a dew point at or below minus (52 °F) at 1 atmosphere.

(iii) Before each refill, the cylinder is removed from any cluster, bank, group, rack or vehicle and passes the hammer test specified in CGA Pamphlet C–6 (IBR, see § 171.7 of this subchapter).

(iv) The cylinder is dried immediately after hydrostatic testing to remove all traces of water.

(v) The cylinder is not used for underwater breathing.

(vi) Each cylinder is stamped with a five-pointed star at least one-fourth of an inch high immediately following the test date.

(2) If, since the last required requalification, a cylinder has not been used exclusively for the gases specifically identified in paragraph (b)(1)(ii) of this section, but currently conforms with all other provisions of paragraph (b)(1) of this section, it may be requalified every 10 years instead of every five years, provided it is first requalified and examined as prescribed by § 173.302a(b) (2), (3) and (4) of this subchapter.

(3) Except as specified in paragraph (b)(2) of this section, if a cylinder, marked with a star, is filled with a compressed gas other than as specified in paragraph (b)(1)(ii) of this section, the star following the most recent test date must be obliterated. The cylinder must be requalified five years from the marked test date, or prior to the first filling with a compressed gas, if the required five-year requalification period has passed.

(c) *DOT 4-series cylinders.* A DOT 4-series cylinder, except a 4L cylinder, that at any time shows evidence of a leak or of internal or external corrosion, denting, bulging or rough usage to the extent that it is likely to be weakened appreciably, or that has lost five percent or more of its official tare weight must be requalified before being refilled and offered for transportation. (Refer to CGA Pamphlet C–6 or C–6.3, as applicable, regarding cylinder weakening.) After testing, the actual tare weight must be recorded as the new tare weight.

(d) *Cylinders 5.44 kg (12 lb) or less with service pressures of 300 psig or less.* A cylinder of 5.44 (12 lb) or less water capacity authorized for service pressure of 300 psig or less must be given a complete external visual inspection at the time periodic requalification becomes due. External visual inspection must be in accordance with CGA Pamphlet C–6 or C–6.1 (IBR, see § 171.7 of this subchapter). The cylinder may be proof pressure tested. The test is successful if the cylinder, when examined under test pressure, does not display a defect described in § 180.205(i)(1) (ii) or (iii). Upon successful completion of the test and inspection, the cylinder must be marked in accordance with § 180.213.

(e) *Proof pressure test* A cylinder made in conformance with specifications DOT 4B, 4BA, 4BW, or 4E used exclusively for: liquefied petroleum gas that meets the detail requirement limits in Table I of ASTM D 1835, ''Standard Specification for Liquefied Petroleum (LP) Gases'' (IBR see § 171.7 of this subchapter) or an equivalent standard containing the same limits; anhydrous dimethylamine; anhydrous methylamine; anhydrous trimethylamine; methyl chloride; methylacetylene-propadiene stabilized; or dichlorodifluoromethane, difluoroethane, difluorochloroethane, chlorodifluoromethane, chlorotetrafluoroethane, trifluorochloroethylene, or mixture thereof, or mixtures of one or more with trichlorofluoromethane; and commercially free from corroding components and protected externally by a suitable corrosion-resistant coating (such as galvanizing or painting) may be requalified by volumetric expansion testing every 12 years instead of every five years. As an alternative, the cylinder may be subjected to a proof pressure test at least two times the marked service pressure, but this latter type of test must be repeated every seven years after expiration of the first 12-year period. When subjected to a proof pressure test, the cylinder must be carefully examined under test pressure and removed from service if a leak or defect is found.

(f) *Poisonous materials.* A cylinder conforming to specification DOT 3A,

3AA, 3B, 4BA, or 4BW having a service pressure of 300 psig or less and used exclusively for methyl bromide, liquid; mixtures of methyl bromide and ethylene dibromide, liquid; mixtures of methyl bromide and chlorpicrin, liquid; mixtures of methyl bromide and petroleum solvents, liquid; or methyl bromide and nonflammable, nonliquefied compressed gas mixtures, liquid; commercially free of corroding components, and protected externally by a suitable corrosion resistant coating (such as galvanizing or painting) and internally by a suitable corrosion resistant lining (such as galvanizing) may be tested every 10 years instead of every five years, provided a visual internal and external examination of the cylinder is conducted every five years in accordance with CGA Pamphlet C–6. The cylinder must be examined at each filling, and rejected if a dent, corroded area, leak or other condition indicates possible weakness.

(g) *Visual inspections.* A cylinder conforming to a specification listed in the table in this paragraph and used exclusively in the service indicated may, instead of a periodic hydrostatic test, be given a complete external visual inspection at the time periodic requalification becomes due. External visual inspection must be in accordance with CGA Pamphlet C–6 or C–6.3, as applicable (IBR, see §171.7 of this subchapter). When this inspection is used instead of hydrostatic pressure testing, subsequent inspections are required at five-year intervals after the first inspection. After May 31, 2004, inspections must be made only by persons holding a current RIN and the results recorded and maintained in accordance with §180.215. Records must include: date of inspection (month and year); DOT specification number; cylinder identification (registered symbol and serial number, date of manufacture, and owner); type of cylinder protective coating (including statement as to need of refinishing or recoating); conditions checked (*e.g.*, leakage, corrosion, gouges, dents or digs in shell or heads, broken or damaged footring or protective ring or fire damage); disposition of cylinder (returned to service, returned to cylinder manufacturer for repairs or condemned). A cylinder passing requalification by the external visual inspection must be marked in accordance with §180.213. Specification cylinders must be in exclusive service as shown in the following table:

Cylinders conforming to—	Used exclusively for—
DOT 3A, DOT 3AA, DOT 3A480X, DOT 4AA480	Anhydrous ammonia of at least 99.95% purity.
DOT 3A, DOT 3AA, DOT 3A480X, DOT 3B, DOT 4B, DOT 4BA, DOT 4BW.	Butadiene, inhibited, that is commercially free from corroding components.
DOT 3A, DOT 3A480X, DOT 3AA, DOT 3B, DOT 4AA480, DOT 4B, DOT 4BA, DOT 4BW.	Cyclopropane that is commercially free from corroding components.
DOT 3A, DOT 3AA, DOT 3A480X, DOT 4B, DOT 4BA, DOT 4BW, DOT 4E.	Chlorinated hydrocarbons and mixtures thereof that are commercially free from corroding components.
DOT 3A, DOT 3AA, DOT 3A480X, DOT 4B, DOT 4BA, DOT 4BW, DOT 4E.	Fluorinated hydrocarbons and mixtures thereof that are commercially free from corroding components.
DOT 3A, DOT 3AA, DOT 3A480X, DOT 3B, DOT 4B, DOT 4BA, DOT 4BW, DOT 4E.	Liquefied hydrocarbon gas that is commercially free from corroding components.
DOT 3A, DOT 3AA, DOT 3A480X, DOT 3B, DOT 4B, DOT 4BA, DOT 4BW, DOT 4E.	Liquefied petroleum gas that meets the detail requirements limits in Table 1 of ASTM 1835, Standard Specification for Liquefied Petroleum (LP) Gases (incorporated by reference; see §171.7 of this subchapter) or an equivalent standard containing the same limits.
DOT 3A, DOT 3AA, DOT 3B, DOT 4B, DOT 4BA, DOT 4BW, DOT 4E.	Methylacetylene-propadiene, stabilized, that is commercially free from corroding components.
DOT 3A, DOT 3AA, DOT 3B, DOT 4B, DOT 4BA, DOT 4BW	Anhydrous mono, di,trimethylamines that are commercially free from corroding components.
DOT 4B240, DOT 4BW240	Ethyleneimine, stabilized.

(h) *Cylinders containing anhydrous ammonia.* A cylinder conforming to specification DOT 3A, 3A480X, or 4AA480 used exclusively for anhydrous ammonia, commercially free from corroding components, and protected externally by a suitable corrosion-resistant coating (such as paint) may be requalified every 10 years instead of every five years.

(i) *Requalification of DOT-8 series cylinders.* (1) Each owner of a DOT-8 series

cylinder used to transport acetylene must have the cylinder shell and the porous filler requalified in accordance with CGA Pamphlet C–13 (IBR, see § 171.7 of this subchapter). Requalification must be performed in accordance with the following schedule:

Date of cylinder manufacture	Shell (visual inspection) requalification		Porous filler requalification	
	Initial	Subsequent	Intial	Subsequent
Before January 1, 1991	Before January 1, 2001	10 years	Before January 1, 2011	Not required.
On or after January 1, 1991.	10 years [1]	10 years	5 to 20 years [2]	Not required.

[1] Years from the date of cylinder manufacture.
[2] No sooner than 5 years, and no later than 20 years from the date of manufacture.

(2) Unless requalified and marked in accordance with CGA Pamphlet C–13 before October 1, 1994, an acetylene cylinder must be requalified by a person who holds a current RIN.

(3) If a cylinder valve is replaced, a cylinder valve of the same weight must be used or the tare weight of the cylinder must be adjusted to compensate for valve weight differential.

(4) The person performing a visual inspection or requalification must record the results as specified in § 180.215.

(5) The person performing a visual inspection or requalification must mark the cylinder as specified in § 180.213.

(j) *Cylinder used as a fire extinguisher*. Only a DOT specification cylinder used as a fire extinguisher and meeting Special Provision 18 in § 172.102(c)(1) of this subchapter may be requalified in accordance with this paragraph (j).

(1) A DOT 4B, 4BA, 4B240ET or 4BW cylinder may be tested as follows:

(i) For a cylinder with a water capacity of 5.44 kg (12 lb) or less, by volumetric expansion test using the water jacket method or by proof pressure test. A requalification must be performed by the end of 12 years after the original test date and at 12-year intervals thereafter.

(ii) For a cylinder having a water capacity over 5.44 kg (12 lb)—

(A) *By proof pressure test*. A requalification must be performed by the end of 12 years after the original test date and at 7-year intervals; or

(B) *By volumetric expansion test using the water jacket method*. A requalification must be performed 12 years after the original test date and at 12-year intervals thereafter.

(2) A DOT 3A, 3AA, or 3AL cylinder must be requalified by volumetric expansion test using the water jacket method. A requalification must be performed 12 years after the original test date and at 12-year intervals thereafter.

(k) *3HT cylinders*. In addition to the other requirements of this section, a cylinder marked DOT-3HT must be requalified in accordance with CGA C–8 (IBR, see § 171.7 of this subchapter).

(l) *Requalification of foreign cylinders filled for export*. A cylinder manufactured outside the United States, other than as provided in §§ 171.12(a) and 171.23(a) of this subchapter, that has not been manufactured, inspected, tested and marked in accordance with part 178 of this subchapter may be filled with compressed gas in the United States, and shipped solely for export if it meets the following requirements, in addition to other requirements of this subchapter:

(1) It has been inspected, tested and marked (with only the month and year of test) in conformance with the procedures and requirements of this subpart or the Associate Administrator has authorized the filling company to fill foreign cylinders under an alternative method of qualification; and

(2) It is offered for transportation in conformance with the requirements of § 171.12(a)(4) or § 171.23(a)(4) of this subchapter.

(m) *DOT–3AL cylinders manufactured of 6351–T6 aluminum alloy*. In addition to the periodic requalification and marking described in § 180.205, each cylinder manufactured of aluminum alloy 6351–T6 used in self-contained underwater breathing apparatus (SCUBA), self-contained breathing apparatus (SCBA), or oxygen service must be requalified and inspected for sustained

load cracking in accordance with the non-destructive examination method described in the following table. Each cylinder with sustained load cracking that has expanded into the neck threads must be condemned in accordance with § 180.205(i). This provision does not apply to cylinders used for carbon dioxide, fire extinguisher or other industrial gas service.

REQUALIFICATION AND INSPECTION OF DOT–3AL CYLINDERS MADE OF ALUMINUM ALLOY 6351–T6

Requalification requirement	Examination procedure [1]	Sustained Load Cracking Condemnation Criteria [2]	Requalification period (years)
Eddy current examination combined with visual inspection.	Eddy current—In accordance with Appendix C of this part. Visual inspection—In accordance with CGA Pamphlet C–6.1 (IBR; see § 171.7 of this subchapter).	Any crack in the neck or shoulder of 2 thread lengths or more.	5

[1] The requalifier performing eddy current must be familiar with the eddy current equipment and must standardize (calibrate) the system in accordance with the requirements provided in Appendix C to this part.
[2] The eddy current must be applied from the inside of the cylinder's neck to detect any sustained load cracking that has expanded into the neck threads.

[67 FR 51660, Aug. 8, 2002, as amended at 68 FR 24662, May 8, 2003; 68 FR 55544, Sept. 26, 2003; 68 FR 48572, Aug. 14, 2003; 68 FR 75764, Dec. 31, 2003; 70 FR 73166, Dec. 9, 2005; 71 FR 51128, Aug. 29, 2005; 72 FR 55696, Oct. 1, 2007; 74 FR53189, Oct. 16, 2009]

EDITORIAL NOTE: The following amendment could not be incorporated into § 180.209 because of the inaccurate amendatory instruction. For the convenience of the user the amendatory instruction and text is set forth as follows:

At 71 FR 54397, Sept. 14, 2006, § 180.209 was amended in paragraph (a)(1), the first and third entries in Table 1 were revised to read as follows:

§ 180.209 Requirements for requalification of specification cylinders.

(a) * * *

(1) * * *

TABLE 1—REQUALIFICATION OF CYLINDERS

Specification under which cylinder was made	Minimum test pressure (psig) [2]	Requalification period (years)
* * *	* * *	* * *
4B, 4BA, 4BW, 4B240ET	2 times service pressure, except non-corrosive (*see* § 180.209(g)).	5, 7, 10, or 12 (*see* § 180.209(e), (f), and (j)).
* * *	* * *	* * *
DOT 4E	2 times service pressure, except non-corrosive (*see* § 180.209(g)).	5 or 7 (see § 180.209(e)).

§ 180.211 Repair, rebuilding and reheat treatment of DOT-4 series specification cylinders.

(a) *General requirements for repair and rebuilding*. Any repair or rebuilding of a DOT 4-series cylinder must be performed by a person holding an approval as specified in § 107.805 of this chapter. A person performing a rebuild function is considered a manufacturer subject to the requirements of § 178.2(a)(2) and subpart C of part 178 of this subchapter. The person performing a repair, rebuild, or reheat treatment must record the test results as specified in § 180.215. Each cylinder that is successfully repaired or rebuilt must be marked in accordance with § 180.213.

(b) *General repair requirements*. Each repair of a DOT 4-series cylinder must be made in accordance with the following conditions:

(1) The repair and the inspection of the work performed must be made in accordance with the requirements of the cylinder specification.

(2) The person performing the repair must use the procedure, equipment, and filler metal or brazing material as authorized by the approval issued under § 107.805 of this chapter.

(3) Welding and brazing must be performed on an area free from contaminants.

(4) A weld defect, such as porosity in a pressure retaining seam, must be completely removed before re-welding. Puddling may be used to remove a weld defect only by the tungsten inert gas shielded arc process.

(5) After removal of a non-pressure attachment and before its replacement, the cylinder must be given a visual inspection in accordance with § 180.205(f).

(6) Reheat treatment of DOT 4B, 4BA or 4BW specification cylinders after replacement of non-pressure attachments is not required when the total weld material does not exceed 20.3 cm (8 inches). Individual welds must be at least 7.6 cm (3 inches) apart.

(7) After repair of a DOT 4B, 4BA or 4BW cylinder, the weld area must be leak tested at the service pressure of the cylinder.

(8) Repair of weld defects must be free of cracks.

(9) When a non-pressure attachment with the original cylinder specification markings is replaced, all markings must be transferred to the attachment on the repaired cylinder.

(10) Walls, heads or bottoms of cylinders with defects or leaks in base metal may not be repaired, but may be replaced as provided for in paragraph (d) of this section.

(c) *Additional repair requirements for 4L cylinders.* (1) Repairs to a DOT 4L cylinder must be performed in accordance with paragraphs (a) and (b) of this section and are limited to the following:

(i) The removal of either end of the insulation jacket to permit access to the cylinder, piping system, or neck tube.

(ii) The replacement of the neck tube. At least a 13 mm (0.51 inch) piece of the original neck tube must be protruding above the cylinder's top end. The original weld attaching the neck tube to the cylinder must be sound and the replacement neck tube must be welded to this remaining piece of the original neck tube.

(iii) The replacement of material such as, but not limited to, the insulating material and the piping system within the insulation space is authorized. The replacement material must be equivalent to that used at the time of original manufacture.

(iv) Other welding procedures that are permitted by CGA Pamphlet C–3 (IBR, see § 171.7 of this subchapter), and not excluded by the definition of ''rebuild,'' are authorized.

(2) After repair, the cylinder must be—

(i) Pressure tested in accordance with the specifications under which the cylinder was originally manufactured;

(ii) Leak tested before and after assembly of the insulation jacket using a mass spectrometer detection system; and

(iii) Tested for heat conductivity requirements.

(d) *General rebuilding requirements.* (1) The rebuilding of a DOT 4-series cylinder must be made in accordance with the following requirements:

(i) The person rebuilding the cylinder must use the procedures and equipment as authorized by the approval issued under § 107.805 of this chapter.

(ii) After removal of a non-pressure component and before replacement of any non-pressure component, the cylinder must be visually inspected in accordance with CGA Pamphlet C–6 (IBR, see § 171.7 of this subchapter).

(iii) The rebuilder may rebuild a DOT 4B, 4BA or 4BW cylinder having a water capacity of 9.07 kg (20 lb) or greater by replacing a head of the cylinder using a circumferential joint. When this weld joint is located at other than an original welded joint, a notation of this modification must be shown on the Manufacturer's Report of Rebuilding in § 180.215(c)(2). The weld joint must be on the cylindrical section of the cylinder.

(iv) Any welding and the inspection of the rebuilt cylinder must be in accordance with the requirements of the applicable cylinder specification and the following requirements:

(A) Rebuilding of any cylinder involving a joint subject to internal pressure may only be performed by fusion welding;

(B) Welding must be performed on an area free from contaminants; and

(C) A weld defect, such as porosity in a pressure retaining seam, must be completely removed before re-welding.

Puddling may be used to remove a weld defect only by using the tungsten inert gas shielded arc process.

(2) Any rebuilt cylinder must be—

(i) Heat treated in accordance with paragraph (f) of this section;

(ii) Subjected to a volumetric expansion test on each cylinder. The results of the tests must conform to the applicable cylinder specification;

(iii) Inspected and have test data reviewed to determine conformance with the applicable cylinder specification; and

(iv) Made of material conforming to the specification. Determination of conformance shall include chemical analysis, verification, inspection and tensile testing of the replaced part. Tensile tests must be performed on the replaced part after heat treatment by lots defined in the applicable specification.

(3) For each rebuilt cylinder, an inspector's report must be prepared to include the information listed in § 180.215(c).

(4) Rebuilding a cylinder with brazed seams is prohibited.

(5) When an end with the original cylinder specification markings is replaced, all markings must be transferred to the rebuilt cylinder.

(e) *Additional rebuilding requirements for DOT 4L cylinders.* (1) The rebuilding of a DOT 4L cylinder must be performed in accordance with paragraph (d) of this section. Rebuilding of a DOT 4L cylinder is:

(i) Substituting or adding material in the insulation space not identical to that used in the original manufacture of that cylinder;

(ii) Making a weld repair not to exceed 150 mm (5.9 inches) in length on the longitudinal seam of the cylinder or 300 mm (11.8 inches) in length on a circumferential weld joint of the cylinder; or

(iii) Replacing the outer jacket.

(2) Reheat treatment of cylinders is prohibited.

(3) After rebuilding, each inner containment vessel must be proof pressure tested at 2 times its service pressure. Each completed assembly must be leak-tested using a mass spectrometer detection system.

(f) *Reheat treatment.* (1) Prior to reheat treatment, each cylinder must be given a visual inspection, internally and externally, in accordance with § 180.205(f).

(2) Cylinders must be segregated in lots for reheat treatment. The reheat treatment and visual inspection must be performed in accordance with the specification for the cylinders except as provided in paragraph (f)(4) of this section.

(3) After reheat treatment, each cylinder in the lot must be subjected to a volumetric expansion test and meet the acceptance criteria in the applicable specification or be scrapped.

(4) After all welding and heat treatment, a test of the new weld must be performed as required by the original specification. The test results must be recorded in accordance with § 180.215.

[67 FR 51660, Aug. 8, 2002, as amended at 68 FR 24664, May 8, 2003; 68 FR 75764, Dec. 31, 2003; 71 FR 54398, Sept. 14, 2006]

§ 180.212 Repair of seamless DOT 3-series specification cylinders and seamless UN pressure receptacles.

(a) *General requirements for repair of DOT 3-series cylinders and UN pressure receptacles.* (1) No person may repair a DOT 3-series cylinder or a seamless UN pressure receptacle unless—

(i) The repair facility holds an approval issued under the provisions in § 107.805 of this chapter; and

(ii) Except as provided in paragraph (b) of this section, the repair and the inspection is performed under the provisions of an approval issued under subpart H of Part 107 of this chapter and conform to the applicable cylinder specification or ISO standard contained in part 178 of this chapter.

(2) The person performing the repair must prepare a report containing, at a minimum, the results prescribed in § 180.215.

(b) *Repairs not requiring prior approval.* Approval is not required for the following specific repairs:

(1) The removal and replacement of a neck ring or foot ring on a DOT 3A, 3AA or 3B cylinder or a UN pressure receptacle that does not affect a pressure part of the cylinder when the repair is performed by a repair facility or a cylinder manufacturer of these types of

cylinders. The repair may be made by welding or brazing in conformance with the original specification. After removal and before replacement, the cylinder must be visually inspected and any defective cylinder must be rejected. The heat treatment, testing and inspection of the repair must be performed under the supervision of an inspector and must be performed in accordance with the original specification.

(2) External re-threading of DOT 3AX, 3AAX or 3T specification cylinders or a UN pressure receptacle mounted in a MEGC; or the internal re-threading of a DOT–3 series cylinder or a seamless UN pressure receptacle when performed by a cylinder manufacturer of these types of cylinders. The repair work must be performed under the supervision of an independent inspection agency. Upon completion of the re-threading, the threads must be gauged in accordance with Federal Standard H–28 or an equivalent standard containing the same specification limits. The re-threaded cylinder must be stamped clearly and legibly with the words ''RETHREAD'' on the shoulder, top head, or neck. No DOT specification cylinder or UN cylinder may be re-threaded more than one time without approval of the Associate Administrator.

[71 FR 33895, June 12, 2006, as amended at 71 FR 54398, Sept. 14, 2006; 72 FR 55697, Oct. 1, 2007]

§ 180.213 Requalification markings.

(a) *General*. Each cylinder or UN pressure receptacle requalified in accordance with this subpart with acceptable results must be marked as specified in this section. Required specification markings may not be altered or removed.

(b) *Placement of markings*. Each cylinder must be plainly and permanently marked on the metal of the cylinder as permitted by the applicable specification. Unless authorized by the cylinder specification, marking on the cylinder sidewall is prohibited.

(1) Requalification and required specification markings must be legible so as to be readily visible at all times. Illegible specification markings may be remarked on the cylinder as provided by the original specification. Requalification markings may be placed on any portion of the upper end of the cylinder excluding the sidewall, as provided in this section. Requalification and required specification markings that are illegible may be reproduced on a metal plate and attached as provided by the original specification.

(2) Previous requalification markings may not be obliterated, except that, when the space originally provided for requalification dates becomes filled, additional dates may be added as follows:

(i) All preceding requalification dates may be removed by peening provided that—

(A) Permission is obtained from the cylinder owner;

(B) The minimum wall thickness is maintained in accordance with manufacturing specifications for the cylinder; and

(C) The original manufacturing test date is not removed.

(ii) When the cylinder is fitted with a footring, additional dates may be marked on the external surface of the footring.

(c) *Requalification marking method*. The depth of requalification markings may not be greater than specified in the applicable specification. The markings must be made by stamping, engraving, scribing or other method that produces a legible, durable mark.

(1) A cylinder used as a fire extinguisher (§ 180.209(j)) may be marked by using a pressure sensitive label.

(2) For a DOT 3HT cylinder, the test date and RIN must be applied by low-stress steel stamps to a depth no greater than that prescribed at the time of manufacture. Stamping on the sidewall is not authorized.

(3) For a composite cylinder, the requalification markings must be applied on a pressure sensitive label, securely affixed in a manner prescribed by the cylinder manufacturer, near the original manufacturer's label. Stamping of the composite surface is not authorized.

(d) *Requalification markings*. Each cylinder successfully passing requalification must be marked with the RIN set in a square pattern, between the month and year of the requalification date.

The first character of the RIN must appear in the upper left corner of the square pattern; the second in the upper right; the third in the lower right; and the fourth in the lower left. Example: A cylinder requalified in September 2006, and approved by a person who has been issued RIN ''A123'', would be marked plainly and permanently into the metal of the cylinder in accordance with location requirements of the cylinder specification or on a metal plate permanently secured to the cylinder in accordance with paragraph (b) of this section. An example of the markings prescribed in this paragraph (d) is as follows:

A1

9 06 X

32

Where:

''9'' is the month of requalification
''A123'' is the RIN
''06'' is the year of requalification, and
''X'' represents the symbols described in paragraphs (f)(2) through (f)(8) of this section.

(1) Upon written request, variation from the marking requirement may be approved by the Associate Administrator.

(2) Exception. A cylinder subject to the requirements of § 171.23(a)(4) of this subchapter may not be marked with a RIN.

(e) *Size of markings*. The size of the markings must be at least 6.35 mm (¼ in.) high, except RIN characters must be at least 3.18 mm (⅛ in.) high.

(f) *Marking illustrations*. Examples of required requalification markings for DOT specification and special permit cylinders are illustrated as follows:

(1) For designation of the 5-year volumetric expansion test, 10-year volumetric expansion test for UN cylinders and cylinders conforming to § 180.209(f) and (h), or 12-year volumetric expansion test for fire extinguishers conforming to § 173.309(b) of this subchapter and cylinders conforming to § 180.209(e) and 180.209(g), the marking is as illustrated in paragraph (d) of this section.

(2) For designation of the 10-year volumetric expansion test for cylinders conforming to § 180.209(b), the marking is as illustrated in paragraph (d) of this section, except that the ''X'' is replaced with a five-point star.

(3) For designation of special filling limits up to 10% in excess of the marked service pressure for cylinders conforming to § 173.302a(b) of this subchapter, the marking is as illustrated in paragraph (d) of this section, except that the ''X'' is replaced with a plus sign ''+''.

(4) For designation of the proof pressure test, the marking is as illustrated in paragraph (d) of this section, except that the ''X'' is replaced with the letter ''S''.

(5) For designation of the 5-year external visual inspection for cylinders conforming to § 180.209(g), the marking is as illustrated in paragraph (d) of this section, except that the ''X'' is replaced with the letter ''E''.

(6) For designation of DOT 8 series cylinder shell requalification only, the marking is as illustrated in paragraph (d) of this section, except that the ''X'' is replaced with the letter ''S''.

(7) For designation of DOT 8 series and UN cylinder shell and porous filler requalification, the marking is as illustrated in paragraph (d) of this section, except that the ''X'' is replaced with the letters ''FS.''

(8) For designation of a nondestructive examination combined with a visual inspection, the marking is as illustrated in paragraph (d) of this section, except that the ''X'' is replaced with the type of test performed, for example the letters ''AE'' for acoustic emission or ''UE'' for ultrasonic examination.

(9) For designation of the eddy current examination combined with a visual inspection, the marking is as illustrated in paragraph (d) of this section, except the ''X'' is replaced with the letters ''VE.''

[67 FR 51660, Aug. 8, 2002, as amended at 70 FR 73166, Dec. 9, 2005; 71 FR 33896, June 12, 2006; 71 FR 51128, Aug. 29, 2006; 71 FR 78635, Dec. 29, 2006; 75 FR 53597, Sept. 1, 2010]

§ 180.215 Reporting and record retention requirements.

(a) *Facility records*. A person who requalifies, repairs or rebuilds cylinders must maintain the following records where the requalification is performed:

(1) Current RIN issuance letter;

(2) If the RIN has expired and renewal is pending, a copy of the renewal request;

(3) Copies of notifications to Associate Administrator required under § 107.805 of this chapter;

(4) Current copies of those portions of this subchapter applicable to its cylinder requalification and marking activities at that location;

(5) Current copies of all special permits governing exemption cylinders requalified or marked by the requalifier at that location; and

(6) The information contained in each applicable CGA or ASTM standard incorporated by reference in § 171.7 of this subchapter applicable to the requalifier's activities. This information must be the same as contained in the edition incorporated by reference in § 171.7 of this subchapter.

(b) *Requalification records.* Daily records of visual inspection, pressure test, and ultrasonic examination if permitted under a special permit, as applicable, must be maintained by the person who performs the requalification until either the expiration of the requalification period or until the cylinder is again requalified, whichever occurs first. A single date may be used for each test sheet, provided each test on the sheet was conducted on that date. Ditto marks or a solid vertical line may be used to indicate repetition of the preceding entry for the following entries only: date; actual dimensions; manufacturer's name or symbol, if present; owner's name or symbol, if present; and test operator. Blank spaces may not be used to indicate repetition of a prior entry. The records must include the following information:

(1) *Calibration test records.* For each test to demonstrate calibration, the date; serial number of the calibrated cylinder; calibration test pressure; total, elastic and permanent expansions; and legible identification of test operator. The test operator must be able to demonstrate that the results of the daily calibration verification correspond to the hydrostatic tests performed on that day. The daily verification of calibration(s) may be recorded on the same sheets as, and with, test records for that date.

(2) *Pressure test and visual inspection records.* The date of requalification; serial number; DOT specification or special permit number; marked pressure; actual dimensions; manufacturer's name or symbol; owner's name or symbol, if present; result of visual inspection; actual test pressure; total, elastic and permanent expansions; percent permanent expansion; disposition, with reason for any repeated test, rejection or condemnation; and legible identification of test operator. For each cylinder marked pursuant to § 173.302a(b)(5) of this subchapter, the test sheet must indicate the method by which any average or maximum wall stress was computed. Records must be kept for all completed, as well as unsuccessful tests. The entry for a second test after a failure to hold test pressure must indicate the date of the earlier test.

(3) *Wall stress.* Calculations of average and maximum wall stress pursuant to § 173.302a(b)(3) of this subchapter, if performed.

(4) *Calibration certificates.* The most recent certificate of calibration must be maintained for each calibrated cylinder.

(c) *Repair, rebuilding or reheat treatment records.* (1) Records covering welding or brazing repairs, rebuilding or reheat treating shall be retained for a minimum of fifteen years by the approved facility.

(2) A record of rebuilding, in accordance with § 180.211(d), must be completed for each cylinder rebuilt. The record must be clear, legible, and contain the following information:

(i) Name and address of test facility, date of test report, and name of original manufacturer;

(ii) Marks stamped on cylinder to include specification number, service pressure, serial number, symbol of manufacturer, inspector's mark, and other marks, if any;

(iii) Cylinder outside diameter and length in inches;

(iv) Rebuild process (welded, brazed, type seams, etc.);

(v) Description of assembly and any attachments replaced (*e.g.*, neckrings, footrings);

(vi) Chemical analysis of material for the cylinder, including seat and Code No., type of analysis (ladle, check), chemical components (Carbon (C), Phosphorous (P), Sulfur (S), Silicon (Si), Manganese (Mn), Nickel (Ni), Chromium (Cr), Molybdenum (Mo), Copper (Cu), Aluminum (Al), Zinc (Zn)), material manufacturer, name of person performing the analysis, results of physical tests of material for cylinder (yield strength (psi), tensile strength (psi), elongation percentage (inches), reduction in area percentage, weld bend, tensile bend, name of inspector);

(vii) Results of proof pressure test on cylinder, including test method, test pressure, total expansion, permanent expansion, elastic expansion, percent permanent expansion (permanent expansion may not exceed ten percent (10%) of total expansion), and volumetric capacity (volumetric capacity of a rebuilt cylinder must be within ±3% of the calculated capacity);

(viii) Each report must include the following certification statement: ''I certify that this rebuilt cylinder is accurately represented by the data above and conforms to all of the requirements in Subchapter C of Chapter I of Title 49 of the Code of Federal Regulations.''. The certification must be signed by the rebuild technician and principal, officer, or partner of the rebuild facility.

[67 FR 51660, Aug. 8, 2002, as amended at 68 FR 24664, May 8, 2003; 70 FR 73166, Dec. 9, 2005; 71 FR 54398, Sept. 14, 2006; 72 FR 55697, Oct. 1, 2007]

§ 180.217 Requalification requirements for MEGCs.

(a) *Periodic inspections.* Each MEGC must be given an initial visual inspection and test in accordance with § 178.75(i) of this subchapter before being put into service for the first time. After the initial inspection, a MEGC must be inspected at least once every five years.

(1) The 5-year periodic inspection must include an external examination of the structure, the pressure receptacles and the service equipment, as follows:

(i) The pressure receptacles are inspected externally for pitting, corrosion, abrasions, dents, distortions, defects in welds or any other conditions, including leakage, that might render the MEGC unsafe for transport.

(ii) The piping, valves, and gaskets are inspected for corroded areas, defects, and other conditions, including leakage, that might render the MEGC unsafe for filling, discharge or transport.

(iii) Missing or loose bolts or nuts on any flanged connection or blank flange are replaced or tightened.

(iv) All emergency devices and valves are free from corrosion, distortion and any damage or defect that could prevent their normal operation. Remote closure devices and self-closing stop valves must be operated to demonstrate proper operation.

(v) Required markings on the MEGC are legible in accordance with the applicable requirements.

(vi) The framework, the supports and the arrangements for lifting the MEGC are in satisfactory condition.

(2) The MEGC's pressure receptacles and piping must be periodically requalified as prescribed in § 180.207(c), at the interval specified in Table 1 in § 180.207.

(b) *Exceptional inspection and test.* If a MEGC shows evidence of damaged or corroded areas, leakage, or other conditions that indicate a deficiency that could affect the integrity of the MEGC, an exceptional inspection and test must be performed, regardless of the last periodic inspection and test. The extent of the exceptional inspection and test will depend on the amount of damage or deterioration of the MEGC. As a minimum, an exceptional inspection of a MEGC must include inspection as specified in paragraph (a)(1) of this section.

(c) *Correction of unsafe condition.* When evidence of any unsafe condition is discovered, the MEGC may not be returned to service until the unsafe condition has been corrected and the MEGC has been requalified in accordance with the applicable tests and inspection.

(d) *Repairs and modifications to MEGCs.* No person may perform a modification to an approved MEGC that may affect conformance to the applicable ISO standard or safe use, and

that involve a change to the design type or affect its ability to retain the hazardous material in transportation. Before making any modification changes to an approved MEGC, the owner must obtain approval from the Associate Administrator as prescribed in § 178.74 of this subchapter. The repair of a MEGC's structural equipment is authorized provided such repairs are made in accordance with the requirements prescribed for its approved design and construction. Any repair to the pressure receptacles of a MEGC must meet the requirements of § 180.212.

(e) *Requalification markings*. Each MEGC must be durably and legibly marked in English, with the year and month, and the type of the most recent periodic requalification performed (*e.g.*, 2004–05 AE/UE, where ''AE'' represents acoustic emission and ''UE'' represents ultrasonic examination) followed by the stamp of the approval agency who performed or witnessed the most recent test.

(f) *Records*. The owner of each MEGC or the owner's authorized agent must retain a written record of the date and results of all repairs and required inspections and tests. The report must contain the name and address of the person performing the inspection or test. The periodic test and inspection records must be retained until the next inspection or test is completed. Repair records and the initial exceptional inspection and test records must be retained during the period the MEGC is in service and for one year thereafter. These records must be made available for inspection by a representative of the Department on request.

[71 FR 33896, June 12, 2006]

Subpart D—Qualification and Maintenance of IBCs

§ 180.350 Applicability and definitions.

This subpart prescribes requirements, in addition to those contained in parts 107, 171, 172, 173 and 178 of this subchapter, applicable to any person responsible for the continuing qualification, maintenance, or periodic retesting of an IBC. The following definitions apply:

(a) *Remanufactured IBCs* are metal, rigid plastic or composite IBCs produced as a UN type from a non-UN type, or are converted from one UN design type to another UN design type. Remanufactured IBCs are subject to the same requirements of this subchapter that apply to new IBCs of the same type (also see § 178.801(c)(1) of this subchapter for design type definition).

(b) *Repaired IBCs* are metal, rigid plastic or composite IBCs that, as a result of impact or for any other cause (such as corrosion, embrittlement or other evidence of reduced strength as compared to the design type), are restored so as to conform to the design type and to be able to withstand the design type tests. For the purposes of this subchapter, the replacement of the rigid inner receptacle of a composite IBC with one from the original manufacturer is considered a repair. Routine maintenance of IBCs (see definition in paragraph (c) of this section) is not considered repair. The bodies of rigid plastic IBCs and the inner receptacles of composite IBCs are not repairable.

(c) Routine maintenance of IBCs is the routine performance on:

(1) Metal, rigid plastic or composite IBCs of operations such as:

(i) Cleaning;

(ii) Removal and reinstallation or replacement of body closures (including associated gaskets), or of service equipment conforming to the original manufacturer's specifications provided that the leaktightness of the IBC is verified; or

(iii) Restoration of structural equipment not directly performing a hazardous material containment or discharge pressure retention function so as to conform to the design type (for example, the straightening of legs or lifting attachments), provided the containment function of the IBC is not affected.

(2) Plastics or textile flexible IBCs of operations, such as:

(i) Cleaning; or

(ii) Replacement of non-integral components, such as non-integral liners and closure ties, with components conforming to the original manufacturer's

specification; provided that these operations do not adversely affect the containment function of the flexible IBC or alter the design type.

[68 FR 45042, July 31, 2003, as amended at 69 FR 76186, Dec. 20, 2004; 76 FR 3389, Jan. 19, 2011]

§ 180.351 Qualification of IBCs.

(a) *General.* Each IBC used for the transportation of hazardous materials must be an authorized packaging.

(b) *IBC specifications.* To qualify as an authorized packaging, each IBC must conform to this subpart, the applicable requirements specified in part 173 of this subchapter, and the applicable requirements of subparts N and O of part 178 of this subchapter.

[Amdt. 180–5, 59 FR 38079, July 26, 1994, as amended at 66 FR 45391, Aug. 28, 2001]

§ 180.352 Requirements for retest and inspection of IBCs.

(a) *General.* Each IBC constructed in accordance with a UN standard for which a test or inspection specified in paragraphs (b)(1), (b)(2) and (b)(3) of this section is required may not be filled and offered for transportation or transported until the test or inspection has been successfully completed. This paragraph does not apply to any IBC filled prior to the test or inspection due date. The requirements in this section do not apply to DOT 56 and 57 portable tanks.

(b) *Test and inspections for metal, rigid plastic, and composite IBCs.* Each IBC is subject to the following test and inspections:

(1) Each IBC intended to contain solids that are loaded or discharged under pressure or intended to contain liquids must be tested in accordance with the leakproofness test prescribed in § 178.813 of this subchapter prior to its first use in transportation and every 2.5 years thereafter, starting from the date of manufacture or the date of a repair conforming to paragraph (d)(1) of this section. For this test, the IBC is not required to have its closures fitted.

(2) An external visual inspection must be conducted initially after production and every 2.5 years starting from the date of manufacture or the date of a repair conforming to paragraph (d)(1) of this section to ensure that:

(i) The IBC is marked in accordance with requirements in § 178.703 of this subchapter. Missing or damaged markings, or markings difficult to read must be restored or returned to original condition.

(ii) Service equipment is fully functional and free from damage which may cause failure. Missing, broken, or damaged parts must be repaired or replaced.

(iii) The IBC is capable of withstanding the applicable design qualification tests. The IBC must be externally inspected for cracks, warpage, corrosion or any other damage which might render the IBC unsafe for transportation. An IBC found with such defects must be removed from service or repaired in accordance with paragraph (d) of this section. The inner receptacle of a composite IBC must be removed from the outer IBC body for inspection unless the inner receptacle is bonded to the outer body or unless the outer body is constructed in such a way (e.g., a welded or riveted cage) that removal of the inner receptacle is not possible without impairing the integrity of the outer body. Defective inner receptacles must be replaced in accordance with paragraph (d) of this section or the entire IBC must be removed from service. For metal IBCs, thermal insulation must be removed to the extent necessary for proper examination of the IBC body.

(3) Each metal, rigid plastic and composite IBC must be internally inspected at least every five years to ensure that the IBC is free from damage and to ensure that the IBC is capable of withstanding the applicable design qualification tests.

(i) The IBC must be internally inspected for cracks, warpage, and corrosion or any other defect that might render the IBC unsafe for transportation. An IBC found with such defects must be removed from hazardous materials service until restored to the original design type of the IBC.

(ii) Metal IBCs must be inspected to ensure the minimum wall thickness requirements in § 178.705(c)(1)(iv) of this subchapter are met. Metal IBCs not conforming to minimum wall thickness

requirements must be removed from hazardous materials service.

(c) *Visual inspection for flexible, fiberboard, or wooden IBCs.* Each IBC must be visually inspected prior to first use and permitted reuse, by the person who places hazardous materials in the IBC, to ensure that:

(1) The IBC is marked in accordance with requirements in §178.703 of this subchapter. Additional marking allowed for each design type may be present. Required markings that are missing, damaged or difficult to read must be restored or returned to original condition.

(2) Proper construction and design specifications have been met.

(i) Each flexible IBC must be inspected to ensure that:

(A) Lifting straps if used, are securely fastened to the IBC in accordance with the design type.

(B) Seams are free from defects in stitching, heat sealing or gluing which would render the IBC unsafe for transportation of hazardous materials. All stitched seam-ends must be secure.

(C) Fabric used to construct the IBC is free from cuts, tears and punctures. Additionally, fabric must be free from scoring which may render the IBC unsafe for transport.

(ii) Each fiberboard IBC must be inspected to ensure that:

(A) Fluting or corrugated fiberboard is firmly glued to facings.

(B) Seams are creased and free from scoring, cuts, and scratches.

(C) Joints are appropriately overlapped and glued, stitched, taped or stapled as prescribed by the design. Where staples are used, the joints must be inspected for protruding staple-ends which could puncture or abrade the inner liner. All such ends must be protected before the IBC is authorized for hazardous materials service.

(iii) Each wooden IBC must be inspected to ensure that:

(A) End joints are secured in the manner prescribed by the design.

(B) IBC walls are free from defects in wood. Inner protrusions which could puncture or abrade the liner must be covered.

(d) *Requirements applicable to repair of IBCs.* (1) Except for flexible and fiberboard IBCs and the bodies of rigid plastic and composite IBCs, damaged IBCs may be repaired and the inner receptacles of composite packagings may be replaced and returned to service provided:

(i) The repaired IBC conforms to the original design type, is capable of withstanding the applicable design qualification tests, and is retested and inspected in accordance with the applicable requirements of this section;

(ii) An IBC intended to contain liquids or solids that are loaded or discharged under pressure is subjected to a leakproofness test as specified in §178.813 of this subchapter and is marked with the date of the test; and

(iii) The IBC is subjected to the internal and external inspection requirements as specified in paragraph (b) of this section.

(iv) The person performing the tests and inspections after the repair must durably mark the IBC near the manfacturer's UN design type marking to show the following:

(A) The country in which the tests and inspections were performed;

(B) The name or authorized symbol of the person performing the tests and inspections; and

(C) The date (month, year) of the tests and inspections.

(v) Retests and inspections performed in accordance with paragraphs (d)(1)(i) and (ii) of this section may be used to satisfy the requirements for the 2.5 and five year periodic tests and inspections required by paragraph (b) of this section, as applicable.

(2) Except for flexible and fiberboard IBCs, the structural equipment of an IBC may be repaired and returned to service provided:

(i) The repaired IBC conforms to the original design type and is capable of withstanding the applicable design qualification tests; and

(ii) The IBC is subjected to the internal and external inspection requirements as specified in paragraph (b) of this section.

(3) Service equipment may be replaced provided:

(i) The repaired IBC conforms to the original design type and is capable of withstanding the applicable design qualification tests;

(ii) The IBC is subjected to the external visual inspection requirements as specified in paragraph (b) of this section; and

(iii) The proper functioning and leak tightness of the service equipment, if applicable, is verified.

(e) *Requirements applicable to routine maintenance of IBCs*. Except for routine maintenance of metal, rigid plastics and composite IBCs performed by the owner of the IBC, whose State and name or authorized symbol is durably marked on the IBC, the party performing the routine maintenance shall durably mark the IBC near the manufacturer's UN design type marking to show the following:

(1) The country in which the routine maintenance was carried out; and

(2) The name or authorized symbol of the party performing the routine maintenance.

(f) *Retest date*. The date of the most recent periodic retest must be marked as provided in § 178.703(b) of this subchapter.

(g) *Record retention*. (1) The owner or lessee of the IBC must keep records of periodic retests, initial and periodic inspections, and tests performed on the IBC if it has been repaired or remanufactured.

(2) Records must include design types and packaging specifications, test and inspection dates, name and address of test and inspection facilities, names or name of any persons conducting test or inspections, and test or inspection specifics and results.

(3) Records must be kept for each packaging at each location where periodic tests are conducted, until such tests are successfully performed again or for at least 2.5 years from the date of the last test. These records must be made available for inspection by a representative of the Department on request.

[Amdt. 180–5, 59 FR 38079, July 26, 1994, as amended at 64 FR 10782, Mar. 5, 1999; 65 FR 58632, Sept. 29, 2000; 66 FR 45186, 45391, Aug. 28, 2001; 68 FR 45042, July 31, 2003; 69 FR 76186, Dec. 20, 2004; 70 FR 34399, June 14, 2005; 70 FR 56099, Sept. 23, 2005; 71 FR 78635, Dec. 29, 2006]

Subpart E—Qualification and Maintenance of Cargo Tanks

§ 180.401 Applicability.

This subpart prescribes requirements, in addition to those contained in parts 107, 171, 172, 173 and 178 of this subchapter, applicable to any person responsible for the continuing qualification, maintenance or periodic testing of a cargo tank.

[Amdt. 180–2, 54 FR 25032, June 12, 1989, as amended at 55 FR 37065, Sept. 7, 1990]

§ 180.403 Definitions.

In addition to the definitions contained in §§ 171.8, 178.320(a) and 178.345–1 of this subchapter, the following definitions apply to this subpart:

Corroded or abraded means any visible reduction in the material thickness of the cargo tank wall or valve due to pitting, flaking, gouging, or chemical reaction to the material surface that effects the safety or serviceability of the cargo tank. The term does not include cosmetic or minor surface degradation that does not effect the safety or serviceability of the cargo tank

Corrosive to the tank or valve means that the lading has been shown through experience or test data to reduce the thickness of the material of construction of the tank wall or valve.

Delivery hose assembly means a liquid delivery hose and its attached couplings.

Modification means any change to the original design and construction of a cargo tank or a cargo tank motor vehicle that affects its structural integrity or lading retention capability including changes to equipment certified as part of an emergency discharge control system required by § 173.315(n)(2) of this subchapter. Any modification that involves welding on the cargo tank wall must also meet all requirements for ''Repair'' as defined in this section. Excluded from this category are the following:

(1) A change to motor vehicle equipment such as lights, truck or tractor power train components, steering and brake systems, and suspension parts, and changes to appurtenances, such as fender attachments, lighting brackets, ladder brackets; and

(2) Replacement of components such as valves, vents, and fittings with a component of a similar design and of the same size.

Owner means the person who owns a cargo tank motor vehicle used for the transportation of hazardous materials, or that person's authorized agent.

Piping system means any component of a cargo tank delivery system, other than a delivery hose assembly, that contains product during loading or unloading.

Rebarrelling means replacing more than 50 percent of the combined shell and head material of a cargo tank.

Repair means any welding on a cargo tank wall done to return a cargo tank or a cargo tank motor vehicle to its original design and construction specification, or to a condition prescribed for a later equivalent specification in effect at the time of the repair. Excluded from this category are the following:

(1) A change to motor vehicle equipment such as lights, truck or tractor power train components, steering and brake systems, and suspension parts, and changes to appurtenances, such as fender attachments, lighting brackets, ladder brackets; and

(2) Replacement of components such as valves, vents, and fittings with a component of a similar design and of the same size.

(3) Replacement of an appurtenance by welding to a mounting pad.

Replacement of a barrel means to replace the existing tank on a motor vehicle chassis with an unused (new) *tank*. For the definition of *tank*, see § 178.320, § 178.345, or § 178.338–1 of this subchapter, as applicable.

Stretching means any change in length, width or diameter of the cargo tank, or any change to a cargo tank motor vehicle's undercarriage that may affect the cargo tank's structural integrity.

[Amdt. 180–2, 54 FR 25032, June 12, 1989, as amended at 55 FR 37065, Sept. 7, 1990; Amdt. 180–3, 57 FR 45466, Oct. 1, 1992; Amdt. 180–7, 59 FR 55177, Nov. 3, 1994; 60 FR 17402, Apr. 5, 1995; Amdt. 180–10, 61 FR 51342, Oct. 1, 1996; 63 FR 52850, Oct. 1, 1998; 64 FR 28050, May 24, 1999; 68 FR 19286, Apr. 18, 2003; 69 FR 54047, Sept. 7, 2004]

§ 180.405 Qualification of cargo tanks.

(a) *General*. Unless otherwise provided in this subpart, each cargo tank used for the transportation of hazardous material must be an authorized packaging.

(b) *Cargo tank specifications*. (1) To qualify as an authorized packaging, each cargo tank must conform to this subpart, the applicable requirements specified in part 173 of this subchapter for the specific lading, and where a DOT specification cargo tank is required, an applicable specification in effect on the date initial construction began: MC 300, MC 301, MC 302, MC 303, MC 304, MC 305, MC 306, MC 307, MC 310, MC 311, MC 312, MC 330, MC 331, MC 338, DOT 406, DOT 407, or DOT 412 (§§ 178.337, 178.338, 178.345, 178.346, 178.347, 178.348 of this subchapter). However, except as provided in paragraphs (b)(2), (d), (e), (f)(5), and (f)(6) of this section, no cargo tank may be marked or certified after August 31, 1995, to the applicable MC 306, MC 307, MC 312, MC 331, or MC 338 specification in effect on December 30, 1990.

(2) *Exception*. A cargo tank originally manufactured to the MC 306, MC 307, or MC 312 specification may be recertified to the original specification provided:

(i) Records are available verifying the cargo tank was originally manufactured to the specification;

(ii) If the cargo tank was stretched, rebarrelled, or modified, records are available verifying that the stretching, rebarrelling, or modification was performed in accordance with the National Board Inspection Code and this part;

(iii) A Design Certifying Engineer or Registered Inspector verifies the cargo tank conforms to all applicable requirements of the original specification and furnishes to the owner written documentation that verifies the tank conforms to the original structural design requirements in effect at the time the tank was originally constructed;

(iv) The cargo tank meets all applicable tests and inspections required by § 180.407(c); and

(v) The cargo tank is recertified to the original specification in accordance with the reporting and record retention provisions of § 180.417. The certification documents required by § 180.417(a)(3)

must include both the date the cargo tank was originally certified to the specification and the date it was recertified. The specification plate on the cargo tank or the cargo tank motor vehicle must display the date the cargo tank was originally certified to the specification.

(c) *Cargo tank specifications no longer authorized for construction.* (1) A cargo tank made to a specification listed in column 1 of table 1 or table 2 of this paragraph (c)(1) may be used when authorized in this part, provided—

(i) The cargo tank initial construction began on or before the date listed in table 1, column 2, as follows:

TABLE 1

Column 1	Column 2
MC 300	Sept. 2, 1967
MC 301	June 12, 1961
MC 302, MC 303, MC 304, MC 305, MC 310, MC 311.	Sept. 2, 1967
MC 330	May 15, 1967

(ii) The cargo tank was marked or certified before the date listed in table 2, column 2, as follows:

TABLE 2

Column 1	Column 2
MC 306, MC 307, MC 312	Sept. 1, 1995

(2) A cargo tank of a specification listed in paragraph (c)(1) of this section may have its pressure relief devices and outlets modified as follows:

(i) A Specification MC 300, MC 301, MC 302, MC 303, or MC 305 cargo tank, to conform with a Specification MC 306 or DOT 406 cargo tank (See §§178.346–3 and 178.346–4 of this subchapter).

(ii) A Specification MC 306 cargo tank to conform to a Specification DOT 406 cargo tank (See §§178.346–3 and 178.346–4 of this subchapter).

(iii) A Specification MC 304 cargo tank, to conform with a Specification MC 307 or DOT 407 cargo tank (See §§178.347–4 and 178.345–11 of this subchapter).

(iv) A Specification MC 307 cargo tank, to conform with a Specification DOT 407 cargo tank (See §§178.347–4 and 178.345–11 of this subchapter).

(v) A Specification MC 310 or MC 311 cargo tank, to conform with a Specification MC 312 or DOT 412 cargo tank (See §§178.348–4 and 178.345–11 of this subchapter).

(vi) A Specification MC 312 cargo tank, to conform with a Specification DOT 412 cargo tank (See §§178.348–4 and 178.345–11 of this subchapter).

(vii) A Specification MC 330 cargo tank, to conform with a Specification MC 331 cargo tank, except as specifically required by §173.315 of this subchapter (see §§178.337–8 and 178.337–9 of this subchapter).

(d) *MC 338 cargo tank.* The owner of a cargo tank that conforms to and was used under the terms of an exemption issued before October 1, 1984, that authorizes the transportation of a cryogenic liquid shall remove the exemption number stenciled on the cargo tank and stamp the specification plate (or a plate placed adjacent to the specification plate) ''DOT MC 338'' followed by the exemption number, for example, ''DOT MC 338–E * * * *''. (Asterisks to be replaced by the exemption number). The cargo tank must be remarked prior to the expiration date of the exemption. During the period the cargo tank is in service, the owner of a cargo tank that is remarked in this manner must retain at its principal place of business a copy of the last exemption in effect. No new construction of cargo tanks pursuant to such exemption is authorized.

(1) The holding time must be determined, as required in §178.338–9 of this subchapter, on each cargo tank or on at least one cargo tank of each design. Any subsequent cargo tank manufactured to the same design type (see §178.320), if not individually tested, must have the optional test regimen performed during the first shipment (see §178.338–9 (b) and (c) of this subchapter).

(2) The holding time determined by test for one authorized cryogenic liquid may be used as the basis for establishing the holding time for other authorized cryogenic liquids.

(e) *MC 331 cargo tanks.* The owner of a MC 331 (§178.337 of this subchapter) cargo tank that conforms to and was used under an exemption issued before October 1, 1984, that authorizes the transportation of ethane, refrigerated

liquid; ethane-propane mixture, refrigerated liquid; or hydrogen chloride, refrigerated liquid shall remove the exemption number stenciled on the cargo tank and stamp the exemption number on the specification plate (or a plate placed adjacent to the specification plate), immediately after the DOT Specification, for example, ''DOT MC 331–E * * * *''. (Asterisks to be replaced by the exemption number.) The cargo tank must be remarked prior to the expiration date of the exemption. During the period the cargo tank is in service, the owner of a cargo tank that is remarked in this manner must retain at the owner's principal place of business a copy of the last exemption in effect.

(f) *MC 306, MC 307, MC 312 cargo tanks.* Either a Registered Inspector or a Design Certifying Engineer and the owner of a MC 306, MC 307 or MC 312 cargo tank motor vehicle constructed in accordance with and used under an exemption issued before December 31, 1990, that authorizes a condition specified in this paragraph shall examine the cargo tank motor vehicle and its design to determine if it meets the requirements of the applicable MC 306, MC 307 or MC 312 specification in effect at the time of manufacture, except as specified herein.

(1) A cargo tank motor vehicle constructed after August 1, 1981, or the date specified in the applicable exemption, in conformance with the following conditions that apply, may be remarked and certified in accordance with paragraphs (f) (5) and (6) of this section:

(i) A vacuum-loaded cargo tank must have an ASME Code stamped specification plate marked with a minimum internal design pressure of 25 psig, and be designed for a minimum external design pressure of 15 psig.

(ii) An outlet equipped with a self-closing system which includes an external stop-valve must have the stop valve and associated piping protected within the vehicle's rear-end tank protection device, vehicle frame or an equally adequate accident damage protection device (See §178.345–8 of this subchapter.) The self-closing system (See §178.345–11 of this subchapter) must be equipped with a remotely actuated means of closure as follows:

(A) For a cargo tank used in other than corrosive service, the remote means of closure must be activated for closure by manual or mechanical means and, in case of fire, by an automatic heat activated means.

(B) For a cargo tank used in corrosive service, the remote means of closure may be actuated by manual or mechanical means only.

(iii) A cargo tank having an unreinforced portion of the shell exceeding 60 inches must have the circumferential reinforcement located so that the thickness and tensile strength of shell material in combination with the frame and circumferential reinforcement produces a structural integrity at least equal to that prescribed in §178.345–3 of this subchapter or the specification in effect at time of manufacture.

(iv) A cargo tank having a projection from the tank shell or head that may contain lading in any tank position is authorized, provided such projection is as strong as the tank shell or head and is located within the motor vehicle's rear-end tank protection or other appropriate accident damage protection device.

(v) A cargo tank may be constructed of nickel, titanium, or other ASME sheet or plate materials in accordance with an exemption.

(2) A vacuum-loaded cargo tank constructed after August 1, 1981, or the date specified in the applicable exemption, in conformance with paragraph (f)(1) of this section, except that an outlet equipped with an external valve which is not part of a self-closing system:

(i) Must be equipped with a self-closing system prior to September 1, 1993.

(ii) May be remarked and certified in accordance with paragraphs (f)(5) and (6) of this section after the cargo tank motor vehicle has been equipped with the self-closing system.

(3) A vacuum-loaded cargo tank constructed prior to August 1, 1981, in conformance with paragraph (f)(1) of this section, except for paragraph (f)(1)(i), may be remarked and certified in accordance with paragraphs (f) (5) and (6) of this section.

(4) A vacuum-loaded cargo tank constructed prior to August 1, 1981, in conformance with paragraph (f)(1) of this section, except for paragraph (f)(1)(i) of this section, and except that an outlet is equipped with an external valve which is not part of a self-closing system:

(i) Must be equipped with a self-closing system prior to September 1, 1993.

(ii) May be remarked and certified in accordance with paragraphs (f)(5) and (6) of this section after the cargo tank motor vehicle has been equipped with the self-closing system.

(5) The owner of a cargo tank for which a determination has been made that the cargo tank is in conformance with paragraph (f) (1), (2), (3), or (4) of this section shall complete a written certification, in English, signed by the owner and containing at least the following information:

(i) A statement certifying that each cargo tank conforms to §180.405 (f) (1), (2), (3), or (4);

(ii) The applicable DOT exemption number, the applicable specification number and the owner's and manufacturer's serial number for the cargo tank;

(iii) A statement setting forth any modifications made to bring the cargo tank into conformance with §180.405(f) (1), (2), (3), or (4), or the applicable specification;

(iv) A statement identifying the person certifying the cargo tank and the date of certification.

(6) The owner of a certified cargo tank shall remove the exemption number stenciled on the cargo tank and shall durably mark the specification plate (or a plate placed adjacent to the specification plate) ''MC +++–E ****####'' (where ''+++'' is to be replaced by the applicable specification number, ''* * *'' by the exemption number and ''# # # #'' by the alloy.)

(7) A cargo tank remarked and certified in conformance with this paragraph (f) is excepted from the provisions of §180.405(c).

(8) During the period the cargo tank is in service, and for one year thereafter, the owner of a cargo tank that is certified and remarked in this manner must retain on file at its principal place of business a copy of the certificate and the last exemption in effect.

(g) *Cargo tank manhole assemblies.* (1) MC 306, MC 307, and MC 312 cargo tanks marked or certified after December 30, 1990, and DOT 406, DOT 407, and DOT 412 cargo tank motor vehicles must be equipped with manhole assemblies conforming with §178.345–5 of this subchapter.

(2) On or before August 31, 1995, each owner of a cargo tank marked or certified before December 31, 1990, authorized for the transportation of a hazardous material, must have the cargo tank equipped with manhole assemblies conforming with §178.345–5, except for the dimensional requirements in §178.345–5(a), the hydrostatic testing requirements in §178.345–5(b), and the marking requirements in §178.345–5(e) of this subchapter. A manhole assembly meeting one of the following provisions is considered to be in compliance with this paragraph:

(i) Manhole assemblies on MC 300, MC 301, MC 302, MC 303, MC 305, MC 306, MC 310, MC 311, and MC 312 cargo tanks that are marked or certified in writing as conforming to §178.345–5 of this subchapter or TTMA RP No. 61–98 (incorporated by reference; see §171.7 of this subchapter), or are tested and certified in accordance with TTMA TB No. 107 (incorporated by reference; see §171.7 of this subchapter).

(ii) Manhole assemblies on MC 304 and MC 307 cargo tanks.

(iii) Manhole assemblies on MC 310, MC 311, and MC 312 cargo tanks with a test pressure of 36 psig or greater.

(3) [Reserved]

(h) *Pressure relief system.* Properly functioning reclosing pressure relief valves and frangible or fusible vents need not be replaced. However, replacement of reclosing pressure relief valves on MC-specification cargo tanks is authorized subject to the following requirements:

(1) Until August 31, 1998, the owner of a cargo tank may replace a reclosing pressure relief device with a device which is in compliance with the requirements for pressure relief devices in effect at the time the cargo tank specification became superseded. If the pressure relief device is installed as an

integral part of a manhole cover assembly, the manhole cover must comply with the requirements of paragraph (g) of this section.

(2) After August 31, 1998, replacement for any reclosing pressure relief valve must be capable of reseating to a leak-tight condition after a pressure surge, and the volume of lading released may not exceed 1 L. Specific performance requirements for these pressure relief valves are set forth in §178.345–10(b)(3) of this subchapter.

(3) As provided in paragraph (c)(2) of this section, the owner of a cargo tank may elect to modify reclosing pressure relief devices to more recent cargo tank specifications. However, replacement devices constructed to the requirements of §178.345–10 of this subchapter must provide the minimum venting capacity required by the original specification to which the cargo tank was designed and constructed.

(i) *Flammable cryogenic liquids.* Each cargo tank used to transport a flammable cryogenic liquid must be examined after each shipment to determine its actual holding time (See §173.318(g)(3) of this subchapter.)

(j) *Withdrawal of certification.* A specification cargo tank that for any reason no longer meets the applicable specification may not be used to transport hazardous materials unless the cargo tank is repaired and retested in accordance with §§180.413 and 180.407 prior to being returned to hazardous materials service. If the cargo tank is not in conformance with the applicable specification requirements, the specification plate on the cargo tank must be removed, obliterated or securely covered. The details of the conditions necessitating withdrawal of the certification must be recorded and signed on the written certificate for that cargo tank. The vehicle owner shall retain the certificate for at least 1 year after withdrawal of the certification.

(k) *DOT-specification cargo tank with no marked design pressure or a marked design pressure of less than 3 psig.* The owner of an MC 300, MC 301, MC 302, MC 303, MC 305, MC 306, or MC 312 cargo tank with a pressure relief system set at 3 psig, must mark or remark the cargo tank with an MAWP or design pressure of not less than 3 psig.

(l) *MC 300, MC 301, MC 302, MC 303, MC 305, MC 306 cargo tank—Rear accident damage protection.* (1) Notwithstanding the requirements in §180.405(b), the applicable specification requirement for a rear bumper or rear-end tank protection device on MC 300, MC 301, MC 302, MC 303, MC 305, and MC 306 cargo tanks does not apply to a cargo tank truck (power unit) until July 1, 1992, if the cargo tank truck—

(i) Was manufactured before July 1, 1989;

(ii) Is used to transport gasoline or any other petroleum distillate product; and

(iii) Is operated in combination with a cargo tank full trailer. However, an empty cargo tank truck, without a cargo tank full trailer attached, may be operated without the required rear bumper or rear-end tank protection device on a one-time basis while being transported to a repair facility for installation of a rear bumper or rear-end protection device.

(2) Each cargo tank shall be provided with a rear accident damage protection device to protect the tank and piping in the event of a rear-end collision and reduce the likelihood of damage which could result in the loss of lading. The rear-end protection device must be in the form of a rear-end tank protection device meeting the requirements of §178.345–8(d) or a rear bumper meeting the following:

(i) The bumper shall be located at least 6 inches to the rear of any vehicle component used for loading or unloading or that may contain lading while the vehicle is in transit.

(ii) The dimensions of the bumper shall conform to §393.86 of this title.

(iii) The structure of the bumper must be designed in accordance with §178.345–8(d)(3) of this subchapter.

(m) *Specification MC 330, MC 331 cargo tank motor vehicles, and nonspecification cargo tank motor vehicles conforming to §173.315(k) of this subchapter, intended for use in the transportation of liquefied compressed gases.* (1) No later than the date of its first scheduled pressure test after July 1, 2001, each specification MC 330 and MC 331 cargo tank motor vehicle, and each nonspecification cargo tank motor vehicle conforming to §173.315(k) of this subchapter,

marked and certified before July 1, 2001, that is used to transport a Division 2.1 material, a Division 2.2 material with a subsidiary hazard, a Division 2.3 material, or anhydrous ammonia must have an emergency discharge control capability as specified in §173.315(n) of this subchapter. Each passive shut-off system installed prior to July 1, 2001, must be certified by a Design Certifying Engineer that it meets the requirements of §173.315(n)(2) of this subchapter.

(2) The requirement in paragraph (m)(1) of this section does not apply to a cargo tank equal to or less than 13,247.5 L (3,500 gallons) water capacity transporting in metered delivery service a Division 2.1 material, a Division 2.2 material with a subsidiary hazard, or anhydrous ammonia equipped with an off-truck remote shut-off device that was installed prior to July 1, 2000. The device must be capable of stopping the transfer of lading by operation of a transmitter carried by a qualified person attending unloading of the cargo tank. The device is subject to the requirement in §177.840(o) of this subchapter for a daily test at 45.72 meters (150 feet).

(3) Each specification MC 330 and MC 331 cargo tank in metered delivery service of greater than 13,247.5 L (3,500 gallons) water capacity transporting a Division 2.1 material, a Division 2.2 material with a subsidiary hazard, or anhydrous ammonia, marked and certified before July 1, 1999, must have an emergency discharge control capability as specified in §§173.315(n) and 177.840 of this subchapter no later than the date of its first scheduled pressure test after July 1, 2001, or July 1, 2003, whichever is earlier.

(n) *Thermal activation.* No later than the date of its first scheduled leakage test after July 1, 1999, each specification MC 330 or MC 331 cargo tank motor vehicle and each nonspecification cargo tank motor vehicle conforming to §173.315(k) of this subchapter, marked and certified before July 1, 1999, that is used to transport a liquefied compressed gas, other than carbon dioxide and chlorine, that has a water capacity of 13,247.5 L (3,500 gallons) or less must be equipped with a means of thermal activation for the internal self-closing stop valve as specified in §178.337–8(a)(4) of this subchapter.

(o) *On-truck remote control of self-closing stop valves—MC 330, MC 331, and MC 338.* On or before October 2, 2006—

(1) Each owner of an MC 330 or MC 331 cargo tank motor vehicle marked or certified before January 1, 1995, must equip the cargo tank with an on-vehicle remote means of closure of the internal self-closing stop valve in conformance with §178.337–8(a)(4) of this subchapter. This requirement does not apply to cargo tanks used only for carbon dioxide and marked ''For carbon dioxide only'' or intended for use in chlorine service only.

(2) Each owner of an MC 338 cargo tank motor vehicle marked or certified before January 1, 1995, must equip each remotely controlled shutoff valve with an on-vehicle remote means of automatic closure in conformance with §178.338–11(c) of this subchapter. This requirement does not apply to cargo tanks used for the transportation of argon, carbon dioxide, helium, krypton, neon, nitrogen, or xenon, or mixtures thereof.

[Amdt. 180–2, 54 FR 25032, June 12, 1989]

EDITORIAL NOTE: For FEDERAL REGISTER citations affecting §180.405, see the List of CFR Sections Affected, which appears in the Finding Aids section of the printed volume and at *www.fdsys.gov.*

§180.407 Requirements for test and inspection of specification cargo tanks.

(a) *General.* (1) A cargo tank constructed in accordance with a DOT specification for which a test or inspection specified in this section has become due, may not be filled and offered for transportation or transported until the test or inspection has been successfully completed. This paragraph does not apply to any cargo tank filled prior to the test or inspection due date.

(2) Except during a pressure test, a cargo tank may not be subjected to a pressure greater than its design pressure or MAWP.

(3) A person witnessing or performing a test or inspection specified in this section must meet the minimum qualifications prescribed in §180.409.

(4) Each cargo tank must be evaluated in accordance with the acceptable results of tests and inspections prescribed in § 180.411.

(5) Each cargo tank which has successfully passed a test or inspection specified in this section must be marked in accordance with § 180.415.

(6) A cargo tank which fails a prescribed test or inspection must:

(i) Be repaired and retested in accordance with § 180.413; or

(ii) Be removed from hazardous materials service and the specification plate removed, obliterated or covered in a secure manner.

(b) *Conditions requiring test and inspection of cargo tanks.* Without regard to any other test or inspection requirements, a specification cargo tank must be tested and inspected in accordance with this section prior to further use if:

(1) The cargo tank shows evidence of dents, cuts, gouges, corroded or abraded areas, leakage, or any other condition that might render it unsafe for hazardous materials service. At a minimum, any area of a cargo tank showing evidence of dents, cuts, digs, gouges, or corroded or abraded areas must be thickness tested in accordance with the procedures set forth in paragraphs (i)(2), (i)(3), (i)(5), and (i)(6) of this section and evaluated in accordance with the criteria prescribed in § 180.411. Any signs of leakage must be repaired in accordance with § 180.413. The suitability of any repair affecting the structural integrity of the cargo tank must be determined either by the testing required in the applicable manufacturing specification or in paragraph (g)(1)(iv) of this section.

(2) The cargo tank has sustained damage to an extent that may adversely affect its lading retention capability. A damaged cargo tank must be pressure tested in accordance with the procedures set forth in paragraph (g) of this section.

(3) The cargo tank has been out of hazardous materials transportation service for a period of one year or more. Each cargo tank that has been out of hazardous materials transportation service for a period of one year or more must be pressure tested in accordance with § 180.407(g) prior to further use.

(4) [Reserved]

(5) The Department so requires based on the existence of probable cause that the cargo tank is in an unsafe operating condition.

(c) *Periodic test and inspection.* Each specification cargo tank must be tested and inspected as specified in the following table by an inspector meeting the qualifications in § 180.409. The retest date shall be determined from the specified interval identified in the following table from the most recent inspection or the CTMV certification date.

COMPLIANCE DATES—INSPECTIONS AND TEST UNDER § 180.407(C)

Test or inspection (cargo tank specification, configuration, and service)	Date by which first test must be completed (see note 1)	Interval period after first test
External Visual Inspection:		
All cargo tanks designed to be loaded by vacuum with full opening rear heads.	September 1, 1991	6 months.
All other cargo tanks	September 1, 1991	1 year.
Internal Visual Inspection:		
All insulated cargo tanks, except MC 330, MC 331, MC 338 (see Note 4).	September 1, 1991	1 year.
All cargo tanks transporting lading corrosive to the tank	September 1, 1991	1 year.
All other cargo tanks, except MC 338	September 1, 1995	5 years.
Lining Inspection:		
All lined cargo tanks transporting lading corrosive to the tank	September 1, 1991	1 year.
Leakage Test:		
MC 330 and MC 331 cargo tanks in chlorine service	September 1, 1991	2 years.
All other cargo tanks except MC 338	September 1, 1991	1 year.
Pressure Test:		
(Hydrostatic or pneumatic) (See Notes 2 and 3)		
All cargo tanks which are insulated with no manhole or insulated and lined, except MC 338.	September 1, 1991	1 year.
All cargo tanks designed to be loaded by vacuum with full opening rear heads.	September 1, 1992	2 years.
MC 330 and MC 331 cargo tanks in chlorine service	September 1, 1992	2 years.
All other cargo tanks	September 1, 1995	5 years.

COMPLIANCE DATES—INSPECTIONS AND TEST UNDER § 180.407(C)—Continued

Test or inspection (cargo tank specification, configuration, and service)	Date by which first test must be completed (see note 1)	Interval period after first test
Thickness Test:		
All unlined cargo tanks transporting material corrosive to the tank, except MC 338.	September 1, 1992	2 years.

NOTE 1: If a cargo tank is subject to an applicable inspection or test requirement under the regulations in effect on December 30, 1990, and the due date (as specified by a requirement in effect on December 30, 1990) for completing the required inspection or test occurs before the compliance date listed in table I, the earlier date applies.

NOTE 2: Pressure testing is not required for MC 330 and MC 331 cargo tanks in dedicated sodium metal service.

NOTE 3: Pressure testing is not required for uninsulated lined cargo tanks, with a design pressure or MAWP 15 psig or less, which receive an external visual inspection and lining inspection at least once each year.

NOTE 4: Insulated cargo tanks equipped with manholes or inspection openings may perform either an internal visual inspection in conjunction with the external visual inspection or a hydrostatic or pneumatic pressure-test of the cargo tank.

(d) *External visual inspection and testing*. The following applies to the external visual inspection and testing of cargo tanks:

(1) Where insulation precludes a complete external visual inspection as required by paragraphs (d)(2) through (d)(6) of this section, the cargo tank also must be given an internal visual inspection in accordance with paragraph (e) of this section. If external visual inspection is precluded because any part of the cargo tank wall is externally lined, coated, or designed to prevent an external visual inspection, those areas of the cargo tank must be internally inspected. If internal visual inspection is precluded because the cargo tank is lined, coated, or designed so as to prevent access for internal inspection, the tank must be hydrostatically or pneumatically tested in accordance with paragraph (g)(1)(iv) of this section. Those items able to be externally inspected must be externally inspected and noted in the inspection report.

(2) The external visual inspection and testing must include as a minimum the following:

(i) The tank shell and heads must be inspected for corroded or abraded areas, dents, distortions, defects in welds and any other conditions, including leakage, that might render the tank unsafe for transportation service;

(ii) The piping, valves, and gaskets must be carefully inspected for corroded areas, defects in welds, and other conditions, including leakage, that might render the tank unsafe for transportation service;

(iii) All devices for tightening manhole covers must be operative and there must be no evidence of leakage at manhole covers or gaskets;

(iv) All emergency devices and valves including self-closing stop valves, excess flow valves and remote closure devices must be free from corrosion, distortion, erosion and any external damage that will prevent safe operation. Remote closure devices and self-closing stop valves must be functioned to demonstrate proper operation;

(v) Missing bolts, nuts and fusible links or elements must be replaced, and loose bolts and nuts must be tightened;

(vi) All markings on the cargo tank required by parts 172, 178 and 180 of this subchapter must be legible;

(vii) [Reserved]

(viii) All major appurtenances and structural attachments on the cargo tank including, but not limited to, suspension system attachments, connecting structures, and those elements of the upper coupler (fifth wheel) assembly that can be inspected without dismantling the upper coupler (fifth wheel) assembly must be inspected for any corrosion or damage which might prevent safe operation;

(ix) For cargo tanks transporting lading corrosive to the tank, areas covered by the upper coupler (fifth wheel) assembly must be inspected at least once in each two year period for corroded and abraded areas, dents, distortions, defects in welds, and any other condition that might render the tank unsafe for transportation service. The upper coupler (fifth wheel) assembly must be removed from the cargo tank for this inspection.

(3) All reclosing pressure relief valves must be externally inspected for any

corrosion or damage which might prevent safe operation. All reclosing pressure relief valves on cargo tanks carrying lading corrosive to the valve must be removed from the cargo tank for inspection and testing. Each reclosing pressure relief valve required to be removed and tested must open at no less than the required set pressure and no more than 110 percent of the required set pressure, and must reseat to a leak-tight condition at no less than 90 percent of the start-to-discharge pressure or the pressure prescribed for the applicable cargo tank specification.

(4) Ring stiffeners or other appurtenances, installed on cargo tanks constructed of mild steel or high-strength, low-alloy steel, that create air cavities adjacent to the tank shell that do not allow for external visual inspection must be thickness tested in accordance with paragraphs (i)(2) and (i)(3) of this section, at least once every 2 years. At least four symmetrically distributed readings must be taken to establish an average thickness for the ring stiffener or appurtenance. If any thickness reading is less than the average thickness by more than 10%, thickness testing in accordance with paragraphs (i)(2) and (i)(3) of this section must be conducted from the inside of the cargo tank on the area of the tank wall covered by the appurtenance or ring stiffener.

(5) Corroded or abraded areas of the cargo tank wall must be thickness tested in accordance with the procedures set forth in paragraphs (i)(2), (i)(3), (i)(5) and (i)(6) of this section.

(6) The gaskets on any full opening rear head must be:

(i) Visually inspected for cracks or splits caused by weather or wear; and

(ii) Replaced if cuts or cracks which are likely to cause leakage, or are of a depth one-half inch or more, are found.

(7) The inspector must record the results of the external visual examination as specified in § 180.417(b).

(e) *Internal visual inspection.* (1) When the cargo tank is not equipped with a manhole or inspection opening, or the cargo tank design precludes an internal inspection, the tank shall be hydrostatically or pneumatically tested in accordance with 180.407(c) and (g).

(2) The internal visual inspection must include as a minimum the following:

(i) The tank shell and heads must be inspected for corroded and abraded areas, dents, distortions, defects in welds, and any other condition that might render the tank unsafe for transportation service.

(ii) Tank liners must be inspected as specified in § 180.407(f).

(3) Corroded or abraded areas of the cargo tank wall must be thickness tested in accordance with paragraphs (i)(2), (i)(3), (i)(5) and (i)(6) of this section.

(4) The inspector must record the results of the internal visual inspection as specified in § 180.417(b).

(f) *Lining inspection.* The integrity of the lining on all lined cargo tanks, when lining is required by this subchapter, must be verified at least once each year as follows:

(1) Rubber (elastomeric) lining must be tested for holes as follows:

(i) Equipment must consist of:

(A) A high frequency spark tester capable of producing sufficient voltage to ensure proper calibration;

(B) A probe with an ''L'' shaped 2.4 mm (0.09 inch) diameter wire with up to a 30.5 cm (12-inch) bottom leg (end bent to a 12.7 mm (0.5 inch) radius), or equally sensitive probe; and

(C) A steel calibration coupon 30.5 cm × 30.5 cm (12 inches × 12 inches) covered with the same material and thickness as that to be tested. The material on the coupon shall have a test hole to the metal substrate made by puncturing the material with a 22 gauge hypodermic needle or comparable piercing tool.

(ii) The probe must be passed over the surface of the calibration coupon in a constant uninterrupted manner until the hole is found. The hole is detected by the white or light blue spark formed. (A sound lining causes a dark blue or purple spark.) The voltage must be adjusted to the lowest setting that will produce a minimum 12.7 mm (0.5 inch) spark measured from the top of the lining to the probe. To assure that the setting on the probe has not

changed, the spark tester must be calibrated periodically using the test calibration coupon, and the same power source, probe, and cable length.

(iii) After calibration, the probe must be passed over the lining in an uninterrupted stroke.

(iv) Holes that are found must be repaired using equipment and procedures prescribed by the lining manufacturer or lining installer.

(2) Linings made of other than rubber (elastomeric material) must be tested using equipment and procedures prescribed by the lining manufacturer or lining installer.

(3) Degraded or defective areas of the cargo tank liner must be removed and the cargo tank wall below the defect must be inspected. Corroded areas of the tank wall must be thickness tested in accordance with paragraphs (i)(2), (i)(3), (i)(5) and (i)(6) of this section.

(4) The inspector must record the results of the lining inspection as specified in § 180.417(b).

(g) *Pressure test*. All components of the cargo tank wall, as defined in § 178.320(a) of this subchapter, must be pressure tested as prescribed by this paragraph.

(1) *Test Procedure*—(i) As part of the pressure test, the inspector must perform an external and internal visual inspection, except that on an MC 338 cargo tank, or a cargo tank not equipped with a manhole or inspection opening, an internal inspection is not required.

(ii) All self-closing pressure relief valves, including emergency relief vents and normal vents, must be removed from the cargo tank for inspection and testing.

(A) Each self-closing pressure relief valve that is an emergency relief vent must open at no less than the required set pressure and no more than 110 percent of the required set pressure, and must reseat to a leak-tight condition at no less than 90 percent of the start-to-discharge pressure or the pressure prescribed for the applicable cargo tank specification.

(B) Normal vents (1 psig vents) must be tested according to the testing criteria established by the valve manufacturer.

(C) Self-closing pressure relief devices not tested or failing the tests in this paragraph (g)(1)(ii) must be repaired or replaced.

(iii) Except for cargo tanks carrying lading corrosive to the tank, areas covered by the upper coupler (fifth wheel) assembly must be inspected for corroded and abraded areas, dents, distortions, defects in welds, and any other condition that might render the tank unsafe for transportation service. The upper coupler (fifth wheel) assembly must be removed from the cargo tank for this inspection.

(iv) Each cargo tank must be tested hydrostatically or pneumatically to the internal pressure specified in the following table. At no time during the pressure test may a cargo tank be subject to pressures that exceed those identified in the following table:

Specification	Test pressure
MC 300, 301, 302, 303, 305, 306.	20.7 kPa (3 psig) or design pressure, whichever is greater.
MC 304, 307	275.8 kPa (40 psig) or 1.5 times the design pressure, whichever is greater.
MC 310, 311, 312	20.7 kPa (3 psig) or 1.5 times the design pressure, whichever is greater.
MC 330, 331	1.5 times either the MAWP or the re-rated pressure, whichever is applicable.
MC 338	1.25 times either the MAWP or the re-rated pressure, whichever is applicable.
DOT 406	34.5 kPa (5 psig) or 1.5 times the MAWP, whichever is greater.
DOT 407	275.8 kPa (40 psig) or 1.5 times the MAWP, whichever is greater.
DOT 412	1.5 times the MAWP.

(v) [Reserved]

(vi) Each cargo tank of a multi-tank cargo tank motor vehicle must be tested with the adjacent cargo tanks empty and at atmospheric pressure.

(vii) All closures except pressure relief devices must be in place during the test. All prescribed loading and unloading venting devices rated at less than test pressure may be removed during the test. If retained, the devices must be rendered inoperative by clamps, plugs, or other equally effective restraining devices. Restraining devices may not prevent detection of leaks or damage the venting devices and must

be removed immediately after the test is completed.

(viii) *Hydrostatic test method.* Each cargo tank, including its domes, must be filled with water or other liquid having similar viscosity, at a temperature not exceeding 100 °F. The cargo tank must then be pressurized to not less than the pressure specified in paragraph (g)(1)(iv) of this section. The cargo tank, including its closures, must hold the prescribed test pressure for at least 10 minutes during which time it shall be inspected for leakage, bulging or any other defect.

(ix) *Pneumatic test method.* Pneumatic testing may involve higher risk than hydrostatic testing. Therefore, suitable safeguards must be provided to protect personnel and facilities should failure occur during the test. The cargo tank must be pressurized with air or an inert gas. The pneumatic test pressure in the cargo tank must be reached by gradually increasing the pressure to one-half of the test pressure. Thereafter, the pressure must be increased in steps of approximately one-tenth of the test pressure until the required test pressure has been reached. The test pressure must be held for at least 5 minutes. The pressure must then be reduced to the MAWP, which must be maintained during the time the entire cargo tank surface is inspected. During the inspection, a suitable method must be used for detecting the existence of leaks. This method must consist either of coating the entire surface of all joints under pressure with a solution of soap and water, or using other equally sensitive methods.

(2) When testing an insulated cargo tank, the insulation and jacketing need not be removed unless it is otherwise impossible to reach test pressure and maintain a condition of pressure equilibrium after test pressure is reached, or the vacuum integrity cannot be maintained in the insulation space. If an MC 338 cargo tank used for the transportation of a flammable gas or oxygen, refrigerated liquid is opened for any reason, the cleanliness must be verified prior to closure using the procedures contained in §178.338–15 of this subchapter.

(3) Each MC 330 and MC 331 cargo tank constructed of quenched and tempered steel in accordance with Part UHT in Section VIII of the ASME Code (IBR, see §171.7 of this subchapter), or constructed of other than quenched and tempered steel but without postweld heat treatment, used for the transportation of anhydrous ammonia or any other hazardous materials that may cause corrosion stress cracking, must be internally inspected by the wet fluorescent magnetic particle method immediately prior to and in conjunction with the performance of the pressure test prescribed in this section. Each MC 330 and MC 331 cargo tank constructed of quenched and tempered steel in accordance with Part UHT in Section VIII of the ASME Code and used for the transportation of liquefied petroleum gas must be internally inspected by the wet fluorescent magnetic particle method immediately prior to and in conjunction with the performance of the pressure test prescribed in this section. The wet fluorescent magnetic particle inspection must be in accordance with Section V of the ASME Code and CGA Technical Bulletin TB–2 (IBR, see §171.7 of this subchapter). This paragraph does not apply to cargo tanks that do not have manholes. (See §180.417(c) for reporting requirements.)

(4) All pressure bearing portions of a cargo tank heating system employing a medium such as, but not limited to, steam or hot water for heating the lading must be hydrostatically pressure tested at least once every 5 years. The test pressure must be at least the maximum system design operating pressure and must be maintained for five minutes. A heating system employing flues for heating the lading must be tested to ensure against lading leakage into the flues or into the atmosphere.

(5) *Exceptions.* (i) Pressure testing is not required for MC 330 and MC 331 cargo tanks in dedicated sodium metal service.

(ii) Pressure testing is not required for uninsulated lined cargo tanks, with a design pressure or MAWP of 15 psig or less, which receive an external visual inspection and a lining inspection at least once each year.

(6) *Acceptance criteria.* A cargo tank that leaks, fails to retain test pressure or pneumatic inspection pressure,

shows distortion, excessive permanent expansion, or other evidence of weakness that might render the cargo tank unsafe for transportation service, may not be returned to service, except as follows: A cargo tank with a heating system which does not hold pressure may remain in service as an unheated cargo tank if:

(i) The heating system remains in place and is structurally sound and no lading may leak into the heating system, and

(ii) The specification plate heating system information is changed to indicate that the cargo tank has no working heating system.

(7) The inspector must record the results of the pressure test as specified in §180.417(b).

(h) *Leakage test.* The following requirements apply to cargo tanks requiring a leakage test:

(1) Each cargo tank must be tested for leaks in accordance with paragraph (c) of this section. The leakage test must include testing product piping with all valves and accessories in place and operative, except that any venting devices set to discharge at less than the leakage test pressure must be removed or rendered inoperative during the test. All internal or external self-closing stop valves must be tested for leak tightness. Each cargo tank of a multi-cargo tank motor vehicle must be tested with adjacent cargo tanks empty and at atmospheric pressure. Test pressure must be maintained for at least 5 minutes. Cargo tanks in liquefied compressed gas service must be externally inspected for leaks during the leakage test. Suitable safeguards must be provided to protect personnel should a failure occur. Cargo tanks may be leakage tested with hazardous materials contained in the cargo tank during the test. Leakage test pressure must be no less than 80% of MAWP marked on the specification plate except as follows:

(i) A cargo tank with an MAWP of 690 kPa (100 psig) or more may be leakage tested at its maximum normal operating pressure provided it is in dedicated service or services; or

(ii) An MC 330 or MC 331 cargo tank in dedicated liquified petroleum gas service may be leakage tested at not less than 414 kPa (60 psig).

(iii) An operator of a specification MC 330 or MC 331 cargo tank, and a nonspecification cargo tank authorized under §173.315(k) of this subchapter, equipped with a meter may check leak tightness of the internal self-closing stop valve by conducting a meter creep test. (See appendix B to this part.)

(iv) An MC 330 or MC 331 cargo tank in dedicated service for anhydrous ammonia may be leakage tested at not less than 414 kPa (60 psig).

(v) A non-specification cargo tank required by §173.8(d) of this subchapter to be leakage tested, must be leakage tested at not less than 16.6 kPa (2.4 psig), or as specified in paragraph (h)(2) of this section.

(2) Cargo tanks used to transport petroleum distillate fuels that are equipped with vapor collection equipment may be leak tested in accordance with the Environmental Protection Agency's ''Method 27—Determination of Vapor Tightness of Gasoline Delivery Tank Using Pressure-Vacuum Test,'' as set forth in Appendix A to 40 CFR part 60. Test methods and procedures and maximum allowable pressure and vacuum changes are in 40 CFR 63.425(e). The hydrostatic test alternative, using liquid in Environmental Protection Agency's ''Method 27—Determination of Vapor Tightness of Gasoline Delivery Tank Using Pressure-Vacuum Test,'' may not be used to satisfy the leak testing requirements of this paragraph. The test must be conducted using air.

(3) A cargo tank that fails to retain leakage test pressure may not be returned to service as a specification cargo tank, except under conditions specified in §180.411(d).

(4) After July 1, 2000, Registered Inspectors of specification MC 330 and MC 331 cargo tanks, and nonspecification cargo tanks authorized under §173.315(k) of this subchapter must visually inspect the delivery hose assembly and piping system while the assembly is under leakage test pressure utilizing the rejection criteria listed in §180.416(g). Delivery hose assemblies not permanently attached to the cargo tank motor vehicle may be inspected separately from the cargo tank motor

vehicle. In addition to a written record of the inspection prepared in accordance with §180.417(b), the Registered Inspector conducting the test must note the hose identification number, the date of the test, and the condition of the hose assembly and piping system tested.

(5) The inspector must record the results of the leakage test as specified in §180.417(b).

(i) *Thickness testing.* (1) The shell and head thickness of all unlined cargo tanks used for the transportation of materials corrosive to the tank must be measured at least once every 2 years, except that cargo tanks measuring less than the sum of the minimum prescribed thickness, plus one-fifth of the original corrosion allowance, must be tested annually.

(2) Measurements must be made using a device capable of accurately measuring thickness to within ±0.002 of an inch.

(3) Any person performing thickness testing must be trained in the proper use of the thickness testing device used in accordance with the manufacturer's instruction.

(4) Thickness testing must be performed in the following areas of the cargo tank wall, as a minimum:

(i) Areas of the tank shell and heads and shell and head area around any piping that retains lading;

(ii) Areas of high shell stress such as the bottom center of the tank;

(iii) Areas near openings;

(iv) Areas around weld joints;

(v) Areas around shell reinforcements;

(vi) Areas around appurtenance attachments;

(vii) Areas near upper coupler (fifth wheel) assembly attachments;

(viii) Areas near suspension system attachments and connecting structures;

(ix) Known thin areas in the tank shell and nominal liquid level lines; and

(x) Connecting structures joining multiple cargo tanks of carbon steel in a self-supporting cargo tank motor vehicle.

(5) Minimum thicknesses for MC 300, MC 301, MC 302, MC 303, MC 304, MC 305, MC 306, MC 307, MC 310, MC 311, and MC 312 cargo tanks are determined based on the definition of minimum thickness found in §178.320(a) of this subchapter. The following Tables I and II identify the ''In-Service Minimum Thickness'' values to be used to determine the minimum thickness for the referenced cargo tanks. The column headed ''Minimum Manufactured Thickness'' indicates the minimum values required for new construction of DOT 400 series cargo tanks, found in Tables I and II of §§178.346–2, 178.347–2, and 178.348–2 of this subchapter. In-Service Minimum Thicknesses for MC 300, MC 301, MC 302, MC 303, MC 304, MC 305, MC 306, MC 307, MC 310, MC 311, and MC 312 cargo tanks are based on 90 percent of the manufactured thickness specified in the DOT specification, rounded to three places.

TABLE I—IN-SERVICE MINIMUM THICKNESS FOR MC 300, MC 303, MC 304, MC 306, MC 307, MC 310, MC 311, AND MC 312 SPECIFICATION CARGO TANKS CONSTRUCTED OF STEEL AND STEEL ALLOYS

Minimum manufactured thickness (US gauge or inches)	Nominal decimal equivalent for (inches)	In-service minimum thickness reference (inches)
19	0.0418	0.038
18	0.0478	0.043
17	0.0538	0.048
16	0.0598	0.054
15	0.0673	0.061
14	0.0747	0.067
13	0.0897	0.081
12	0.1046	0.094
11	0.1196	0.108
10	0.1345	0.121
9	0.1495	0.135
8	0.1644	0.148
7	0.1793	0.161
3/16	0.1875	0.169
1/4	0.2500	0.225
5/16	0.3125	0.281
3/8	0.3750	0.338

TABLE II—IN-SERVICE MINIMUM THICKNESS FOR MC 301, MC 302, MC 304, MC 305, MC 306, MC 307, MC 311, AND MC 312 SPECIFICATION CARGO TANKS CONSTRUCTED OF ALUMINUM AND ALUMINUM ALLOYS

Minimum manufactured thickness	In-service minimum thickness (inches)
0.078	0.070
0.087	0.078
0.096	0.086
0.109	0.098
0.130	0.117

TABLE II—IN-SERVICE MINIMUM THICKNESS FOR MC 301, MC 302, MC 304, MC 305, MC 306, MC 307, MC 311, AND MC 312 SPECIFICATION CARGO TANKS CONSTRUCTED OF ALUMINUM AND ALUMINUM ALLOYS—Continued

Minimum manufactured thickness	In-service minimum thickness (inches)
0.141	0.127
0.151	0.136
0.172	0.155
0.173	0.156
0.194	0.175
0.216	0.194
0.237	0.213
0.270	0.243
0.360	0.324
0.450	0.405
0.540	0.486

(6) An owner of a cargo tank that no longer conforms to the minimum thickness prescribed for the design as manufactured may use the cargo tank to transport authorized materials at reduced maximum weight of lading or reduced maximum working pressure, or combinations thereof, provided the following conditions are met:

(i) A Design Certifying Engineer must certify that the cargo tank design and thickness are appropriate for the reduced loading conditions by issuance of a revised manufacturer's certificate, and

(ii) The cargo tank motor vehicle's nameplate must reflect the revised service limits.

(7) An owner of a cargo tank that no longer conforms with the minimum thickness prescribed for the specification may not return the cargo tank to hazardous materials service. The tank's specification plate must be removed, obliterated or covered in a secure manner.

(8) The inspector must record the results of the thickness test as specified in § 180.417(b).

(9) For MC 331 cargo tanks constructed before October 1, 2003, minimum thickness shall be determined by the thickness indicated on the U1A form minus any corrosion allowance. For MC 331 cargo tanks constructed after October 1, 2003, the minimum thickness will be the value indicated on the specification plate. If no corrosion allowance is indicated on the U1A form then the thickness of the tank shall be the thickness of the material of construction indicated on the UIA form with no corrosion allowance.

(10) For 400-series cargo tanks, minimum thickness is calculated according to tables in each applicable section of this subchapter for that specification: § 178.346–2 for DOT 406 cargo tanks, § 178.347–2 for DOT 407 cargo tanks, and § 178.348–2 for DOT 412 cargo tanks.

[Amdt. 180–2, 54 FR 25032, June 12, 1989]

EDITORIAL NOTE: For FEDERAL REGISTER citations affecting § 180.407, see the List of CFR Sections Affected, which appears in the Finding Aids section of the printed volume and at *www.fdsys.gov*.

§ 180.409 Minimum qualifications for inspectors and testers.

(a) Except as otherwise provided in this section, any person performing or witnessing the inspections and tests specified in § 180.407(c) must—

(1) Be registered with the Federal Motor Carrier Safety Administration in accordance with part 107, subpart F of this chapter,

(2) Be familiar with DOT-specification cargo tanks and trained and experienced in use of the inspection and testing equipment needed, and

(3) Have the training and experience required to meet the definition of ''Registered Inspector'' in § 171.8 of this chapter.

(b) A person who only performs annual external visual inspections and leakage tests on a cargo tank motor vehicle, owned or operated by that person, with a capacity of less than 13,250 L (3,500 gallons) used exclusively for flammable liquid petroleum fuels, is not required to meet the educational and years of experience requirements set forth in the definition of ''Registered Inspector'' in § 171.8 of this subchapter. Although not required to meet the educational and years of experience requirements, a person who performs visual inspections or leakage tests or signs the inspection reports must have the knowledge and ability to perform such inspections and tests and must perform them as required by this subchapter, and must register with the Department as required by subpart F of part 107 of this chapter.

(c) A person who performs only annual external visual inspections and leakage tests on a permanently mounted non-bulk tank, owned or operated by that person, for petroleum products as authorized by § 173.8(c) of this subchapter, is not required to be registered in accordance with subpart F of part 107 of this chapter. In addition the person who signs the inspection report required by § 180.417(b) of this subpart for such non-bulk tanks is not required to be registered. Although not required to register, a person who performs visual inspections or leakage tests or signs the inspection reports must have the knowledge and ability to perform such inspections and tests and must perform them as required by this subchapter.

(d) A motor carrier or cargo tank owner who meets the requirements of paragraph (a) of this section may use an employee who is not a Registered Inspector to perform a portion of the pressure retest required by § 180.407(g). External and internal visual inspections must be accomplished by a Registered Inspector, but the hydrostatic or pneumatic pressure test, as set forth in § 180.407(g)(1)(viii) and (ix), respectively, may be done by an employee who is not a Registered Inspector provided that—

(1) The employee is familiar with the cargo tank and is trained and experienced in the use of the inspection and testing equipment used;

(2) The employer submits certification that such employee meets the qualification requirements to the Associate Administrator, Attn: (PHH–32), Pipeline and Hazardous Materials Safety Administration, Department of Transportation, East Building, 1200 New Jersey Avenue, SE., Washington, DC 20590; and

(3) The employer retains a copy of the tester's qualifications with the documents required by § 180.417(b).

[Amdt. 180–2, 55 FR 37069, Sept. 7, 1990, as amended by Amdt. 180–3, 56 FR 66287, Dec. 20, 1991; 57 FR 45466, Oct. 1, 1992; Amdt. 180–11, 62 FR 1217, Jan. 8, 1997; 66 FR 45391, Aug. 28, 2001; 68 FR 19288, Apr. 18, 2003; 70 FR 56100, Sept. 23, 2005; 72 FR 55697, Oct. 1, 2007]

§ 180.411 Acceptable results of tests and inspections.

(a) *Corroded or abraded areas.* The minimum thickness may not be less than that prescribed in the applicable specification.

(b) *Dents, cuts, digs and gouges.* For evaluation procedures, see CGA C–6 (IBR, see § 171.7 of this subchapter).

(1) For dents at welds or that include a weld, the maximum allowable depth is ½ inch. For dents away from welds, the maximum allowable depth is 1/10 of the greatest dimension of the dent, but in no case may the depth exceed one inch.

(2) The minimum thickness remaining beneath a cut, dig, or gouge may not be less than that prescribed in the applicable specification.

(c) *Weld or structural defects.* Any cargo tank with a weld defect such as a crack, pinhole, or incomplete fusion, or a structural defect must be taken out of hazardous materials service until repaired.

(d) *Leakage.* All sources of leakage must be properly repaired prior to returning a tank to hazardous materials service.

(e) *Relief valves.* Any pressure relief valve that fails to open and reclose at the prescribed pressure must be repaired or replaced.

(f) *Liner integrity.* Any defect shown by the test must be properly repaired.

(g) *Pressure test.* Any tank that fails to meet the acceptance criteria found in the individual specification that applies must be properly repaired.

[Amdt. 180–2, 54 FR 25032, June 12, 1989, as amended at 68 FR 75764, Dec. 31, 2003]

§ 180.413 Repair, modification, stretching, rebarrelling, or mounting of specification cargo tanks.

(a) *General.* Any repair, modification, stretching, rebarrelling, or mounting of a cargo tank must be performed in conformance with the requirements of this section.

(1) Except as otherwise provided in this section, each repair, modification, stretching, or rebarrelling of a specification cargo tank must be performed by a repair facility holding a valid National Board Certificate of Authorization for use of the National Board ''R'' stamp and must be made in accordance

with the edition of the National Board Inspection Code in effect at the time the work is performed.

(i) Repairs, modifications, stretchings, and rebarrellings performed on non-ASME stamped specification cargo tanks may be performed by:

(A) A cargo tank manufacturer holding a valid ASME Certificate of Authorization for the use of the ASME ''U'' stamp using the quality control procedures used to obtain the Certificate of Authorization; or

(B) A repair facility holding a valid National Board Certificate of Authorization for use of the National Board ''R'' stamp using the quality control procedures used to obtain the Certificate of Authorization.

(ii) A repair, modification, stretching, or rebarrelling of a non-ASME stamped cargo tank may be done without certification by an Authorized Inspector, completion of the R–1 form, or being stamped with the ''R'' stamp.

(2) Prior to each repair, modification, stretching, rebarrelling, or mounting, the cargo tank motor vehicle must be emptied of any hazardous material lading. In addition, cargo tank motor vehicles used to transport flammable or toxic lading must be sufficiently cleaned of residue and purged of vapors so any potential hazard is removed, including void spaces between double bulkheads, piping and vapor recovery systems.

(3) Each person performing a repair, modification, stretching, rebarrelling or mounting of a DOT specification cargo tank must be registered in accordance with subpart F of part 107 of this chapter.

(b) *Repair*. The suitability of each repair affecting the structural integrity or lading retention capability of the cargo tank must be determined by the testing required either in the applicable manufacturing specification or in §180.407(g)(1)(iv). Each repair of a cargo tank involving welding on the shell or head must be certified by a Registered Inspector. The following provisions apply to specific cargo tank repairs:

(1) DOT 406, DOT 407, and DOT 412 cargo tanks must be repaired in accordance with the specification requirements in effect at the time of repair;

(2) MC 300, MC 301, MC 302, MC 303, MC 305, and MC 306 cargo tanks must be repaired in accordance with either the most recent revision of the original specification or with the DOT 406 specification in effect at the time of repair;

(3) MC 304 and MC 307 cargo tanks must be repaired in accordance with either the most recent revision of the original specification or with the DOT 407 specification in effect at the time of repair;

(4) MC 310, MC 311, and MC 312 cargo tanks must be repaired in accordance with either the most recent revision of the original specification or with the DOT 412 specification in effect at the time of repair;

(5) MC 338 cargo tanks must be repaired in accordance with the specification requirements in effect at the time of repair; and

(6) MC 330 and MC 331 cargo tanks must be repaired in accordance with the repair procedures described in CGA Technical Bulletin TB–2 (IBR, see §171.7 of this subchapter) and the National Board Inspection Code (IBR, see §171.7 of this subchapter). Each cargo tank having cracks or other defects requiring welded repairs must meet all inspection, test, and heat treatment requirements in §178.337–16 of this subchapter in effect at the time of the repair, except that postweld heat treatment after minor weld repairs is not required. When a repair is made of defects revealed by the wet fluorescent magnetic particle inspection, including those repaired by grinding, the affected area of the cargo tank must again be examined by the wet fluorescent magnetic particle method after hydrostatic testing to assure that all defects have been removed.

(c) *Maintenance or replacement of piping, valves, hoses, or fittings*. After each repair, maintenance or replacement of a pipe, valve, hose, or fitting on a cargo tank, that component must be installed in accordance with the provisions of the applicable specification before the cargo tank is returned to service.

(1) After maintenance or replacement that does not involve welding on the

cargo tank wall, the repaired or replaced piping, valve, hose, or fitting must be tested for leaks. This requirement is met when the piping, valve, hose, or fitting is tested after installation in accordance with § 180.407(h)(1). A hose may be tested before or after installation on the cargo tank.

(2) After repair or replacement of piping, valves, or fittings that involves welding on the cargo tank wall, the cargo tank must be pressure tested in accordance with the applicable manufacturing specification or § 180.407(g)(1)(iv). In addition, the affected piping, valve, or fitting must be tested in accordance with paragraph (c)(1) of this section.

(3) Hoses on cargo tanks in dedicated liquefied compressed gas, except carbon dioxide, service are excepted from these testing requirements, but must be tested in accordance with § 180.416(f).

(d) *Modification, stretching, or rebarrelling.* Modification, stretching or rebarrelling of a cargo tank motor vehicle must conform to the following provisions:

(1) The design of the modified, stretched, or rebarrelled cargo tank motor vehicle must be certified in writing by a Design Certifying Engineer as meeting the structural integrity and accident damage protection requirements of the applicable specification.

(2) Except as provided in paragraph (d)(2)(v) of this section, all new material and equipment affected by modification, stretching, or rebarrelling must meet the requirements of the specification in effect at the time such work is performed, and all applicable structural integrity requirements (§ 178.337–3, § 178.338–3, or § 178.345–3 of this subchapter). The work must conform to the requirements of the applicable specification as follows:

(i) For specification MC 300, MC 301, MC 302, MC 303, MC 305 and MC 306 cargo tanks, the provisions of either specification MC 306 or DOT 406 until August 31, 1995 and, thereafter to specification DOT 406 only;

(ii) For specification MC 304 and MC 307 cargo tanks, the provisions of either specification MC 307 or DOT 407 until August 31, 1995 and, thereafter to specification DOT 407 only;

(iii) For specification MC 310, MC 311, and MC 312 cargo tanks, the provisions of either specification MC 312 or DOT 412 until August 31, 1995 and, thereafter to specification DOT 412 only;

(iv) For specification MC 330 cargo tanks, the provisions of specification MC 331; and

(v) For specification MC 338 cargo tanks, the provisions of specification MC 338. However, structural modifications to MC 338 cargo tanks authorized under § 180.405(d) may conform to applicable provisions of the ASME Code instead of specification MC 338, provided the structural integrity of the modified cargo tank is at least equivalent to that of the original cargo tank.

(3) The person performing the modification, stretching, or rebarrelling must:

(i) Have knowledge of the original design concept, particularly with respect to structural design analysis, material and welding procedures.

(ii) Assure compliance of the rebuilt cargo tank's structural integrity, venting, and accident damage protection with the applicable specification requirements.

(iii) Assure compliance with all applicable Federal Motor Carrier Safety Regulations for all newly installed safety equipment.

(iv) Assure the suitability of each modification, stretching and rebarrelling that affects the lading retention capability of the cargo tank by performing the tests required in the applicable specification or § 180.407(g)(1)(iv).

(v) Any modification that changes information displayed on the specification plate requires the installation of a supplemental specification plate, nameplate, or both containing the information that reflects the cargo tank as modified, stretched or rebarrelled. The plate must include the name of the person or facility doing the work, DOT registration number, date work is completed, retest information, and any other information that differs from the original plate. The supplemental plates must be installed immediately adjacent to the existing plate or plates.

(vi) On a variable specification cargo tank, install a supplemental or new variable specification plate, and replace the specification listed on the

original specification plate with the words ''see variable specification plate.''

(4) A Registered Inspector must certify that the modified, stretched, or rebarrelled cargo tank conforms to the requirements of this section and the applicable specification by issuing a supplemental certificate of compliance. The registration number of the Registered Inspector must be entered on the certificate.

(e) *Mounting of cargo tanks.* Mounting a cargo tank on a cargo tank motor vehicle must be:

(1) Performed as required by paragraph (d)(2) of this section and certified by a Design Certifying Engineer if the mounting of a cargo tank on a motor vehicle chassis involves welding on the cargo tank head or shell or any change or modification of the methods of attachment; or

(2) In accordance with the original specification for attachment to the chassis or the specification for attachment to the chassis in effect at the time of the mounting, and performed under the supervision of a Registered Inspector if the mounting of a cargo tank on a motor vehicle chassis does not involve welding on the cargo tank head or shell or a change or modification of the methods of attachment.

(f) *Records.* Each owner of a cargo tank motor vehicle must retain at the owner's principal place of business all records of repair, modification, stretching, or rebarrelling, including notation of any tests conducted to verify the suitability of the repair, modification, stretching, or rebarrelling made to each cargo tank during the time the cargo tank motor vehicle is in service and for one year thereafter. Copies of these records must be retained by a motor carrier, if not the owner of the cargo tank motor vehicle, at its principal place of business during the period the cargo tank motor vehicle is in the carrier's service.

[68 FR 19288, Apr. 18, 2003; 68 FR 52372, Sept. 3, 2003, as amended at 68 FR 75764, Dec. 31, 2003]

§ 180.415 Test and inspection markings.

(a) Each cargo tank successfully completing the test and inspection requirements contained in § 180.407 must be marked as specified in this section.

(b) Each cargo tank must be durably and legibly marked, in English, with the date (month and year) and the type of test or inspection performed, subject to the following provisions:

(1) The date must be readily identifiable with the applicable test or inspection.

(2) The markings must be in letters and numbers at least 32 mm (1.25 inches) high, near the specification plate or anywhere on the front head.

(3) The type of test or inspection may be abbreviated as follows:

(i) V for external visual inspection and test;

(ii) I for internal visual inspection;

(iii) P for pressure test;

(iv) L for lining inspection;

(v) T for thickness test; and

(vi) K for leakage test for a cargo tank tested under § 180.407, except § 180.407(h)(2); and

(vii) K-EPA27 for a cargo tank tested under § 180.407(h)(2) after October 1, 2004.

Examples to paragraph (b). The markings ''10–99 P, V, L'' represent that in October 1999 a cargo tank passed the prescribed pressure test, external visual inspection and test, and the lining inspection. The markings ''2–00 K-EPA27'' represent that in February 2000 a cargo tank passed the leakage test under § 180.407(h)(2). The markings ''2–00 K, K-EPA27'' represent that in February 2000 a cargo tank passed the leakage test under both § 180.407(h)(1) and under EPA Method 27 in § 180.407(h)(2).

(c) For a cargo tank motor vehicle composed of multiple cargo tanks constructed to the same specification, which are tested and inspected at the same time, one set of test and inspection markings may be used to satisfy the requirements of this section. For a cargo tank motor vehicle composed of multiple cargo tanks constructed to different specifications, which are tested and inspected at different intervals, the test and inspection markings must appear in the order of the cargo tank's

corresponding location, from front to rear.

[Amdt. 180–2, 56 FR 27879, June 17, 1991, as amended by Amdt. 180–3, 56 FR 66287, Dec. 20, 1991; 57 FR 45466, Oct. 1, 1992; Amdt. 180–6, 59 FR 49135, Sept. 26, 1994; Amdt. 180–10, 61 FR 51343, Oct. 1, 1996; 68 FR 19290, Apr. 18, 2003; 68 FR 52372, Sept. 3, 2003]

§ 180.416 Discharge system inspection and maintenance program for cargo tanks transporting liquefied compressed gases.

(a) *Applicability*. This section is applicable to an operator using specification MC 330, MC 331, and nonspecification cargo tanks authorized under § 173.315(k) of this subchapter for transportation of liquefied compressed gases other than carbon dioxide. Paragraphs (b), (c), (d)(1), (d)(5), (e), (f), and (g)(1) of this section, applicable to delivery hose assemblies, apply only to hose assemblies installed or carried on the cargo tank.

(b) *Hose identification*. By July 1, 2000, the operator must assure that each delivery hose assembly is permanently marked with a unique identification number and maximum working pressure.

(c) *Post-delivery hose check*. After each unloading, the operator must visually check that portion of the delivery hose assembly deployed during the unloading.

(d) *Monthly inspections and tests*. (1) The operator must visually inspect each delivery hose assembly at least once each calendar month the delivery hose assembly is in service.

(2) The operator must visually inspect the piping system at least once each calendar month the cargo tank is in service. The inspection must include fusible elements and all components of the piping system, including bolts, connections, and seals.

(3) At least once each calendar month a cargo tank is in service, the operator must actuate all emergency discharge control devices designed to close the internal self-closing stop valve to assure that all linkages operate as designed. appendix A to this part outlines acceptable procedures that may be used for this test.

(4) The operator of a cargo tank must check the internal self-closing stop valve in the liquid discharge opening for leakage through the valve at least once each calendar month the cargo tank is in service. On cargo tanks equipped with a meter, the meter creep test as outlined in appendix B to this part or a test providing equivalent accuracy is acceptable. For cargo tanks that are not equipped with a meter, appendix B to this part outlines one acceptable method that may be used to check internal self-closing stop valves for closure.

(5) The operator must note each inspection in a record. That record must include the inspection date, the name of the person performing the inspection, the hose assembly identification number, the manufacturer of the hose assembly, the date the hose was assembled and tested, and an indication that the delivery hose assembly and piping system passed or failed the tests and inspections. The operator must retain a copy of each test and inspection record at its principal place of business or where the vehicle is housed or maintained until the next test of the same type is successfully completed.

(e) *Annual hose leakage test*. The owner of a delivery hose assembly that is not permanently attached to a cargo tank motor vehicle must ensure that the hose assembly is annually tested in accordance with § 180.407(h)(4).

(f) *New or repaired delivery hose assemblies*. Each operator of a cargo tank must ensure each new and repaired delivery hose assembly is tested at a minimum of 120 percent of the hose maximum working pressure.

(1) The operator must visually examine the delivery hose assembly while it is under pressure.

(2) Upon successful completion of the pressure test and inspection, the operator must assure that the delivery hose assembly is permanently marked with the month and year of the test.

(3) After July 1, 2000, the operator must complete a record documenting the test and inspection, including the date, the signature of the inspector, the hose owner, the hose identification number, the date of original delivery hose assembly and test, notes of any defects observed and repairs made, and an indication that the delivery hose assembly passed or failed the tests and

inspections. A copy of each test and inspection record must be retained by the operator at its principal place of business or where the vehicle is housed or maintained until the next test of the same type is successfully completed.

(g) *Rejection criteria.* (1) No operator may use a delivery hose assembly determined to have any condition identified below for unloading liquefied compressed gases. An operator may remove and replace damaged sections or correct defects discovered. Repaired hose assemblies may be placed back in service if retested successfully in accordance with paragraph (f) of this section.

(i) Damage to the hose cover that exposes the reinforcement.

(ii) Wire braid reinforcement that has been kinked or flattened so as to permanently deform the wire braid.

(iii) Soft spots when not under pressure, bulging under pressure, or loose outer covering.

(iv) Damaged, slipping, or excessively worn hose couplings.

(v) Loose or missing bolts or fastenings on bolted hose coupling assemblies.

(2) No operator may use a cargo tank with a piping system found to have any condition identified in this paragraph (g)(2) for unloading liquefied compressed gases.

(i) Any external leak identifiable without the use of instruments.

(ii) Bolts that are loose, missing, or severely corroded.

(iii) Manual stop valves that will not actuate.

(iv) Rubber hose flexible connectors with any condition outlined in paragraph (g)(1) of this section.

(v) Stainless steel flexible connectors with damaged reinforcement braid.

(vi) Internal self-closing stop valves that fail to close or that permit leakage through the valve detectable without the use of instruments.

(vii) Pipes or joints that are severely corroded.

[64 FR 28051, May 24, 1999, as amended at 78 FR 15330, Mar. 11, 2013]

§ 180.417 Reporting and record retention requirements.

(a) *Vehicle certification.* (1) Each owner of a specification cargo tank must retain the manufacturer's certificate, the manufacturer's ASME U1A data report, where applicable, and related papers certifying that the specification cargo tank identified in the documents was manufactured and tested in accordance with the applicable specification. This would include any certification of emergency discharge control systems required by § 173.315(n) of this subchapter or § 180.405(m). The owner must retain the documents throughout his ownership of the specification cargo tank and for one year thereafter. In the event of a change in ownership, the prior owner must retain non-fading photo copies of these documents for one year.

(2) Each motor carrier who uses a specification cargo tank motor vehicle must obtain a copy of the manufacturer's certificate and related papers or the alternative report authorized by paragraph (a)(3)(i) or (ii) of this section and retain the documents as specified in this paragraph (a)(2). A motor carrier who is not the owner of a cargo tank motor vehicle must also retain a copy of the vehicle certification report for as long as the cargo tank motor vehicle is used by that carrier and for one year thereafter. The information required by this section must be maintained at the company's principal place of business or at the location where the vehicle is housed or maintained. The provisions of this section do not apply to a motor carrier who leases a cargo tank for less than 30 days.

(3) *DOT Specification cargo tanks manufactured before September 1, 1995*—(i) *Non-ASME Code stamped cargo tanks*—If an owner does not have a manufacturer's certificate for a cargo tank and he wishes to certify it as a specification cargo tank, the owner must perform appropriate tests and inspections, under the direct supervision of a Registered Inspector, to determine if the cargo tank conforms with the applicable specification. Both the owner and the Registered Inspector must certify that the cargo tank fully conforms to the applicable specification. The owner must retain the certificate, as specified in this section.

(ii) *ASME Code Stamped cargo tanks.* If the owner does not have the manufacturer's certificate required by the specification and the manufacturer's data

report required by the ASME, the owner may contact the National Board for a copy of the manufacturer's data report, if the cargo tank was registered with the National Board, or copy the information contained on the cargo tank's identification and ASME Code plates. Additionally, both the owner and the Registered Inspector must certify that the cargo tank fully conforms to the specification. The owner must retain such documents, as specified in this section.

(b) *Test or inspection reporting.* Each person performing a test or inspection as specified in § 180.407 must prepare a written report, in English, in accordance with this paragraph.

(1) Each test or inspection report must include the following information:

(i) Owner's and manufacturer's unique serial number for the cargo tank;

(ii) Name of cargo tank manufacturer;

(iii) Cargo tank DOT or MC specification number;

(iv) MAWP of the cargo tank;

(v) Minimum thickness of the cargo tank shell and heads when the cargo tank is thickness tested in accordance with § 180.407(d)(5), § 180.407(e)(3), § 180.407(f)(3), or § 180.407(i);

(vi) Indication of whether the cargo tank is lined, insulated, or both; and

(vii) Indication of special service of the cargo tank (*e.g.*, transports material corrosive to the tank, dedicated service, etc.)

(2) Each test or inspection report must include the following specific information as appropriate for each individual type of test or inspection:

(i) Type of test or inspection performed;

(ii) Date of test or inspection (month and year);

(iii) Listing of all items tested or inspected, including information about pressure relief devices that are removed, inspected and tested or replaced, when applicable (type of device, set to discharge pressure, pressure at which device opened, pressure at which device re-seated, and a statement of disposition of the device (*e.g.*, reinstalled, repaired, or replaced)); information regarding the inspection of upper coupler assemblies, when applicable (visually examined in place, or removed for examination); and, information regarding leakage and pressure testing, when applicable (pneumatic or hydrostatic testing method, identification of the fluid used for the test, test pressure, and holding time of test);

(iv) Location of defects found and method of repair;

(v) ASME or National Board Certificate of Authorization number of facility performing repairs, if applicable;

(vi) Name and address of person performing test;

(vii) Registration number of the facility or person performing the test;

(viii) Continued qualification statement, such as ''cargo tank meets the requirements of the DOT specification identified on this report'' or ''cargo tank fails to meet the requirements of the DOT specification identified on this report'';

(ix) DOT registration number of the registered inspector; and

(x) Dated signature of the registered inspector and the cargo tank owner.

(3) The owner and the motor carrier, if not the owner, must each retain a copy of the test and inspection reports until the next test or inspection of the same type is successfully completed. This requirement does not apply to a motor carrier leasing a cargo tank for fewer than 30 days.

(c) *Additional requirements for Specification MC 330 and MC 331 cargo tanks.* (1) After completion of the pressure test specified in § 180.407(g)(3), each motor carrier operating a Specification MC 330 or MC 331 cargo tank in anhydrous ammonia, liquefied petroleum gas, or any other service that may cause stress corrosion cracking, must make a written report containing the following information:

(i) Carrier's name, address of principal place of business, and telephone number;

(ii) Complete identification plate data required by Specification MC 330 or MC 331, including data required by ASME Code;

(iii) Carrier's equipment number;

(iv) A statement indicating whether or not the tank was stress relieved after fabrication;

(v) Name and address of the person performing the test and the date of the test;

(vi) A statement of the nature and severity of any defects found. In particular, information must be furnished to indicate the location of defects detected, such as in weld, heat-affected zone, the liquid phase, the vapor phase, or the head-to-shell seam. If no defect or damage was discovered, that fact must be reported;

(vii) A statement indicating the methods employed to make repairs, who made the repairs, and the date they were completed. Also, a statement of whether or not the tank was stress relieved after repairs and, if so, whether full or local stress relieving was performed;

(viii) A statement of the disposition of the cargo tank, such as ''cargo tank scrapped'' or ''cargo tank returned to service''; and

(ix) A statement of whether or not the cargo tank is used in anhydrous ammonia, liquefied petroleum gas, or any other service that may cause stress corrosion cracking. Also, if the cargo tank has been used in anhydrous ammonia service since the last report, a statement indicating whether each shipment of ammonia was certified by its shipper as containing 0.2 percent water by weight.

(2) A copy of the report must be retained by the carrier at its principal place of business during the period the cargo tank is in the carrier's service and for one year thereafter. Upon a written request to, and with the approval of, the Field Administrator, Regional Service Center, Federal Motor Carrier Safety Administration for the region in which a motor carrier has its principal place of business, the carrier may maintain the reports at a regional or terminal office.

(3) The requirement in paragraph (c)(1) of this section does not apply to a motor carrier leasing a cargo tank for less than 30 days.

(d) *Supplying certificates and reports.* Each person offering a DOT-specification cargo tank for sale or lease must provide the purchaser or lessee a copy of the cargo tank certificate of compliance, records of repair, modification, stretching, or rebarrelling; and the most recent inspection and test reports made under this section. Copies of such reports must be provided to the lessee if the cargo tank is leased for more than 30 days.

[Amdt. 180–2, 54 FR 25032, June 12, 1989, as amended at 55 FR 21038, May 22, 1990; 55 FR 37069, Sept. 7, 1990; 56 FR 27879, June 17, 1991; 58 FR 12905, Mar. 8, 1993; Amdt. 180–2, 59 FR 1786, Jan. 12, 1994; Amdt. 180–10, 61 FR 51343, Oct. 1, 1996; 63 FR 52850, Oct. 1, 1998; 64 FR 28052, May 24, 1999; 65 FR 50463, Aug. 18, 2000; 67 FR 61016, Sept. 27, 2002; 68 FR 19290, Apr. 18, 2003; 68 FR 52372, Sept. 3, 2003; 69 FR 54047, Sept. 7, 2004; 70 FR 34077, June 13, 2005; 76 FR 43532, July 20, 2011]

Subpart F—Qualification and Maintenance of Tank Cars

SOURCE: Amdt. 180–8, 60 FR 49079, Sept. 21, 1995, unless otherwise noted.

§ 180.501 Applicability.

(a) This subpart prescribes requirements, in addition to those contained in parts 107, 171, 172, 173, 174, and 179 of this subchapter, applicable to any person who manufactures, fabricates, marks, maintains, repairs, inspects, or services tank cars to ensure continuing qualification.

(b) This subpart also establishes the minimum acceptable framework for an owner's qualification program for tank cars and components. Owners should follow this subpart in developing their written procedures (work instructions), as required under § 179.7(d), for use by tank car facility employees. The owner's qualification program for each tank car, or a fleet of tank cars, must identify where to inspect, how to inspect, and the acceptance criteria. Alternative inspection and test procedures or intervals based on a damage-tolerance analysis or service reliability assessment must be approved by the Associate Administrator for Railroad Safety in accordance with 180.509(1). Tank car facilities must incorporate the owner's qualification program in their quality assurance program, as required under § 179.7(a)(2), (b)(3), (b)(5), and (d).

(c) Any person who performs a function prescribed in this part shall perform that function in accordance with this part.

(d) Where, in this subpart, a person is required to make documents available to FRA upon request, such request means that credentialed FRA personnel or an authorized representative of the Department may view the documents and make copies of them. The document owner's may seek confidential treatment of the documents presented. See § 105.30.

[Amdt. 180–8, 60 FR 49079, Sept. 21, 1995, as amended by Amdt. 179–50, 61 FR 33256, June 26, 1996; 77 FR 37986, June 25, 2012]

§ 180.503 Definitions.

The following definitions and those contained in §§ 171.8 and 179.2 of this subchapter apply:

Coating/lining owner means the person with the financial responsibility for purchasing and maintaining the integrity of the interior coating or lining.

Corrosive to the tank or service equipment means a material identified in Appendix D of this part or a material when in contact with the inner shell of the tank or service equipment has a corrosion rate on steel greater than 2.5 milli-inch per year (mpy) (0.0025 inch per year).

Defects mean abrasions; corrosion; cracks; dents; flaws in welds; distortions; erosion; missing, damaged, leaking or loose components and fasteners; and other conditions or imperfections that may make a tank car unsafe for transportation and/or require it to be removed from service.

Design level of reliability and safety means the level of reliability and safety built into the tank car and, therefore, inherent in its specification, design, and manufacture.

Inspection and test means a careful and critical examination of a tank car and its appurtenances performed by qualified personnel following the owner's qualified procedures.

Interior heater system means a piping system located within the tank shell that uses a fluid medium to heat the lading for the purposes of unloading.

Maintenance means upkeep, or preservation, including repairs necessary and proper to ensure an in-operation tank car's specification until its next qualification.

Modification means any change to a tank car that affects the certificate of construction prescribed in § 179.5, including an alteration prescribed in § 179.6, or conversion.

Objectively reasonable and articulable belief means a belief based on particularized and identifiable facts that provide an objective basis to believe or suspect that a tank car or a class or design of tank cars may be in an unsafe operating condition.

Qualification, as relevant to a tank car, means the car and its components conforms to the specification to which it was designed, manufactured, or modified to the requirements of this subpart, to the applicable requirements of the AAR Tank Car Manual (IBR, see § 171.7 of this subchapter), and to the owner's acceptance criteria. Qualification is accomplished by careful and critical examination that verifies conformance using inspections and tests based on a written program approved by the tank car owner followed by a written representation of that conformance. A tank car that passes the appropriate tests for its specification, has a signed test report, is marked to denote this passage, and is considered qualified for hazardous materials transportation under this subchapter.

Qualification of	Tests and inspections	§ 180.509(*)
Tank	Visual Inspection	d
	Structural Integrity Inspection.	e
	Thickness Test: Note 1.	f
	Safety System Inspection.	h
Service Equipment	Service Equipment	k
Coating/lining	Internal Coatings and Linings.	i

NOTE 1: Subparagraph (f)(2) may require thickness tests at an interval different from the other items for qualification of the tank.

Railworthy, *Railworthiness* for a tank car means that the tank, service equipment, safety systems, and all other components covered by this subchapter conform to the HMR, and are otherwise suitable for continued service and capable of performing their intended function until their next qualification.

Reactive to the tank or service equipment means a material that, in contact with the inner shell of the tank, or with the service equipment, may react to produce heat, gases, and/or pressure

which could substantially reduce the effectiveness of the packaging or the safety of its use.

Reinforced tank shell butt weld means the portion of a butt weld covered by a reinforcing pad.

Reinforcing pad means an attachment welded directly to the tank supporting major structural components for the purpose of preventing damage to the tank through fatigue, overstressing, denting, puncturing, or tearing.

Reliability means the quantified ability of an item or structure to operate without failure for the specified period of its design life or until its next qualification.

Representation means attesting through documenting, in writing or by marking on the tank (or jacket), that a tank car is qualified and railworthy. See also §§ 180.511 and 180.517(b).

Safety system means one or more of the following: Thermal protection systems, insulation systems, tank head puncture resistance systems, coupler vertical restraint systems, and systems used to protect discontinuities (e.g., skid protection and protective housings) as required under this subchapter.

Service equipment means equipment used for loading and unloading (including an interior heating system), sampling, venting, vacuum relief, pressure relief, and measuring the amount of lading or the lading temperature.

Service equipment owner means the party responsible for bearing the cost of the maintenance of the service equipment.

Tank car owner means the person to whom a rail car's reporting marks are assigned, as listed in the Universal Machine Language Equipment Register (UMLER).

Tank car tank means the shell, heads, tank shell and head weld joints, attachment welds, sumps, nozzles, flanges, and all other components welded thereto that are either in contact with the lading or contain the lading.

Train consist means a written record of the contents and location of each rail car in a train.

[77 FR 37986, June 25, 2012]

§ 180.505 Quality assurance program.

The quality assurance program requirements of § 179.7 of this subchapter apply.

§ 180.507 Qualification of tank cars.

(a) Each tank car marked as meeting a ''DOT'' specification or any other tank car used for the transportation of a hazardous material must meet the requirements of this subchapter or the applicable specification to which the tank was constructed.

(b) *Tank car specifications no longer authorized for construction.* (1) Tank cars prescribed in the following table are authorized for service provided they conform to all applicable safety requirements of this subchapter:

Specification prescribed in the current regulations	Other specifications permitted	Notes
105A200W	105A100W	1
105A200ALW	105A100ALW	1
105A300W	ICC–105, 105A300.	
105A400W	105A400.	
105A500W	105A500.	
105A600W	105A600.	
106A500X	ICC–27, BE–27, 106A500.	
106A800X	106A800.	
107A * * * *		2

NOTE 1: Tanks built as Specification DOT 105A100W or DOT 105A100ALW may be altered and converted to DOT 105A200W and DOT 105A200ALW, respectively.

NOTE 2: The test pressures of tanks built in the United States between January 1, 1941 and December 31, 1955, may be increased to conform to Specification 107A. Original and revised test pressure markings must be indicated and may be shown on the tank or on a plate attached to the bulkhead of the car. Tanks built before 1941 are not authorized.

(2) [Reserved]

(3) Specification DOT-113A175W, DOT-113C60W, DOT-113D60W, and DOT-113D120W tank cars may continue in use, but new construction is not authorized.

(4) Class DOT 105A and 105S tank cars used to transport hydrogen chloride, refrigerated liquid under the terms of DOT-E 3992 may continue in service, but new construction is not authorized.

(5) Specification DOT-103A-ALW, 103AW, 103ALW, 103ANW, 103BW, 103CW, 103DW, 103EW, and 104W tank cars may continue in use, but new construction is not authorized.

[Amdt. 180–8, 60 FR 49079, Sept. 21, 1995, as amended at 68 FR 48572, Aug. 14, 2003; 77 FR 37987, June 25, 2012]

§ 180.509 Requirements for inspection and test of specification tank cars.

(a) *General*. Each tank car owner must ensure that a tank car facility:

(1) Inspects and tests each item according to the requirements specified in this section;

(2) Evaluates each item according to the acceptable results of inspections and tests specified in § 180.511;

(3) Marks each tank car as specified in § 180.515 that is qualified to transport hazardous materials;

(4) Prepares the documentation as required by § 180.517 for each item qualified under this section. A copy of the documentation required by § 180.517 must be sent to the owner as appropriate and according to the owner's instructions.

(b) *Conditions requiring qualification of tank cars*. Without regard to the qualification compliance date requirements of any paragraph of this section, an owner of a tank car or an internal coating or lining must ensure an appropriate inspection and test according to the type of defect and the type of maintenance or repair performed if:

(1) The tank car shows evidence of abrasion, corrosion, cracks, dents, distortions, defects in welds, or any other condition that may make the tank car unsafe for transportation,

(2) The tank car was in an accident and shows evidence of damage to an extent that may adversely affect its capability to retain its contents or to otherwise remain railworthy.

(3) The tank bears evidence of damage caused by fire. (4) The Associate Administrator for Railroad Safety, FRA, requires it based on the existence of an objectively reasonable and articulable belief that a tank car or a class or design of tank cars may be in an unsafe operating condition.

(c) *Frequency of inspection and tests*. Each tank car shall have an inspection and test according to the requirements of this paragraph.

(1) For Class 107 tank cars and tank cars of riveted construction, the tank car must have a hydrostatic pressure test and visual inspection conforming to the requirements in effect prior to July 1, 1996, for the tank specification.

(2) For Class DOT 113 tank cars, see § 173.319(e) of this subchapter.

(3) Fusion welded tank cars must be inspected and tested to be qualified and maintained in accordance with the following table. All qualification requirements need not be done at the same time or at the same facility.

FREQUENCY OF QUALIFICATION INSPECTION AND TESTS

Section 180.509(*)	Description	Maximum interval
D	Visual inspection	10 years.
E	Structural integrity inspection	10 years.
F	Thickness test	See § 180.509(f).
H	Safety Systems	10 years.
I	Internal coating or lining (for materials corrosive or reactive to the tank) (See definitions at § 180.503).	See § 180.509(i).
J	Leakage pressure test	After reassembly.
K	Service equipment (including pressure relief device)	See § 180.509(k).

(d) *Visual inspection*. At a minimum, each tank car facility must visually inspect the tank externally and internally as follows:

(1) An internal inspection of the tank shell and heads for abrasion, corrosion, cracks, dents, distortions, defects in welds, or any other condition that makes the tank car unsafe for transportation, and except in the areas where insulation or a thermal protection system precludes it, an external inspection of the tank shell and heads for abrasion, corrosion, cracks, dents, distortions, defects in welds, or any other condition that makes the tank car unsafe for transportation, and for DOT 115 class tank cars, an internal inspection of the inner container and external inspection of the outer shell and heads for defects in welds, or any other condition that may make the tank car unsafe for transportation;

(2) When an internal coating or lining, head protection, insulation, or thermal protection is removed in part

or in whole, the internal and external exposed surface of the tank must be visually inspected for defects in welds or any other condition that may make the tank car unsafe for transportation, and this inspection must precede any application or reapplication of a coating or lining;

(3) An inspection of the service equipment, including gaskets, for indications of corrosion and other conditions that may make the tank car unsafe for transportation;

(4) An inspection for missing or loose bolts, nuts, or elements that may make the tank car unsafe for transportation;

(5) An inspection of all closures on the tank car for conditions that may make the tank car unsafe for transportation, including an inspection of the protective housings for proper condition;

(6) An inspection of excess flow valves with threaded seats for tightness; and

(7) An inspection of the required markings on the tank car for legibility.

(e) *Structural integrity inspections and tests.* (1) Each tank car owner must ensure the structural elements on the tank car qualify with the applicable requirements of this subchapter. At a minimum, the structural integrity inspection and test must include:

(i) All transverse fillet welds greater than 0.64 cm (0.25 inch) within 121.92 cm (4 feet) of the bottom longitudinal centerline except body bolster pad attachment welds;

(ii) The termination of longitudinal fillet welds greater than 0.64 cm (0.25 inch) within 121.92 cm (4 feet) of the bottom longitudinal centerline; and

(iii) The tank shell butt welds within 60.96 cm (2 feet) of the bottom longitudinal centerline, unless the tank car owner can determine by analysis (e.g., finite element analysis, damage-tolerance analysis, or service reliability assessment) that the structure will not develop defects that reduce the design level of safety and reliability or fail within its operational life or prior to the next required inspection. The owner must maintain all documentation used to make such determination at its principal place of business and make the data available to FRA or an authorized representative of the Department upon request.

(2) For DOT 115 class tanks, paragraphs (e)(1)(i) through (iii) of this section apply only to the outer shell fillet welds and to the non-reinforced exposed outer shell butt welds.

(3) The inspection requirements of paragraph (e)(1)(iii) of this section do not apply to reinforced tank shell butt welds until the time of lining removal or application for tank cars with an internal lead, glass, or rubber lining.

(4) Each tank car facility must inspect and test the elements identified in paragraph (e)(1) of this section by one or more of the following methods:

(i) Dye penetrant testing (PT);

(ii) Radiographic examination (RT);

(iii) Magnetic particle testing (MT);

(iv) Ultrasonic testing (UT); and

(v) Direct, remote, or enhanced visual inspection, using, for example, magnifiers, fiberscopes, borescopes, and/or machine vision technology (VT).

(f) *Thickness tests.* (1) The tank car owner must ensure that each tank car facility measures the thickness of the tank car shell, heads, sumps, protective housing (i.e., domes), and nozzles on each tank car by using a device capable of accurately measuring the thickness to within ±0.05 mm (±0.002 inch).

(2) The tank car owner must ensure that each tank car has a thickness test measurement:

(i) At the time of an internal coating or lining application or replacement, or

(ii) At least once every ten (10) years for a tank that does not have an internal coating or lining, or

(iii) At least once every five (5) years for a tank that does not have an internal coating or lining when:

(A) The tank is used to transport a material that is corrosive or reactive to the tank (see Appendix D of this part) or service equipment as defined §180.503, and

(B) The remaining shell and head thickness is tested and determined to be at or below line C in Figure A of this paragraph.

Figure A

Tank and Shell Thickness Qualification Frequencies

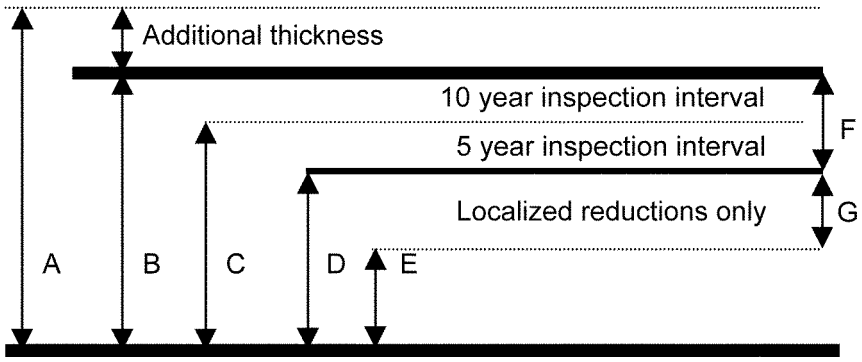

Where:

A. As-built tank shell or head thickness with additional thickness.

B. Required minimum tank shell or head thickness after forming per part 179.

C. Inspection frequency adjustment point (design minimum shell or head thickness, minus ½ of the table value in paragraph (g) of this section).

D. Condemning limit for general corrosion (required minimum shell or head thickness, minus the value in paragraph (g) of this section).

E. Condemning limit for localized corrosion (required minimum shell or head thickness, minus the table value in paragraph (g) of this section, minus 1.58 mm (1/16 inch)). See Note 1 in paragraph (g) of this section for diameter limitations and minimum separation distances.

F. Allowable shell or head thickness reduction (table value in paragraph (g) of this section).

G. Additional thickness reduction for localized areas in paragraph (g) of this section.

(3) For a localized repair of an internal coating or lining where a material corrosive to the tank or service equipment as defined § 180.503 has contacted the tank, a qualified individual must verify the coating or lining's conformance with paragraph (g) of this section by measuring the shell or head in the area of the repair. The thickness test applies only to the non-lined or coated repaired area, and is not a qualification event. Modification of the tank stencil is not required.

(4) Operation of a tank car below the condemning limit for general corrosion or the condemning limit for localized corrosion (as shown in Figure A of this section) is prohibited.

(5) For sumps, protective housing (i.e., domes), nozzles, and nozzle reinforcing pads, the tank car owner must determine if any reduction in wall thickness affects the design levels of reliability and safety built into sump, protective housing, nozzle, or nozzle reinforcement. Each tank car owner must maintain at its principal place of business documentation describing the allowable thickness reductions for sumps, protective housings, and nozzles, and nozzle reinforcements. This documentation must be made available to FRA or an authorized representative of the Department upon request.

(6) After repairs, alterations, conversions, modifications, or blasting of tank car that results in a reduction of the tank's thickness, and anytime a

tank car coating or lining is removed, a qualified individual must measure the thickness of the tank in the area of reduced thickness to ensure that the thickness of the tank conforms to paragraph (g) of this section.

(g) *Service life thickness allowance.* (1) A tank car found with a thickness below the required minimum thickness after forming for its specification, as stated in part 179 of this subchapter, may continue in service if any reduction in the required minimum thickness is not more than that provided in the following table:

ALLOWABLE SHELL THICKNESS REDUCTIONS

Marked tank test pressure	Top shell and tank head	Bottom shell
60 psig <200 psig	3.17 mm ⅛ inch	1.58 mm. 1/16 inch.
≥200 psig	0.79 mm 1/32 inch	0.79 mm. 1/32 inch.

NOTE 1. A tank car owner may add an extra 1.58 mm (1/16 inch) to the values in the table for local reductions. Local reductions are those that do not exceed 20.32 linear centimeters (8 linear inches) measured at the longest diameter, and are separated from the other local reductions by at least 40.64 cm (16 inches).

NOTE 2. Any reduction in the tank car shell thickness may not affect the structural strength of the tank car to the extent that the tank car no longer conforms to the applicable provisions of Section 6.2 of the AAR Specifications for Tank Cars (IBR, see §171.7 of this subchapter).

NOTE 3. For DOT 115 class tank cars, shell thickness reductions apply only to the outer shell of the tank car. There is no shell or head thickness reduction authorized for the inner tank.

(2) [Reserved]

(h) *Safety system inspections.* Each tank car owner must ensure qualification of the tank car safety systems. However, inspections of foam or cork insulation systems are not required.

(i) *Internal coating and lining inspection and test.* (1) At a minimum, the owner of an internal coating or lining applied to protect a tank used to transport a material that is corrosive or reactive to the tank must ensure an inspection adequate enough to detect defects or other conditions that could reduce the design level of reliability and safety of the tank is performed. In addition, the owner of a coating or lining of tank cars used to transport hazardous materials must ensure the lining complies with §173.24(b)(2) and (b)(3) of this subchapter.

(2) The owner of the internal coating or lining must establish and maintain a record of the service life of the coating or lining and commodity combination, that is, the specific hazardous materials that were loaded into a tank and the coating or lining in place at the time of loading. The owner of the internal coating or lining must use its knowledge of the service life of each coating or lining and commodity combination to establish an appropriate inspection interval for that coating or lining and commodity combination. This interval must not exceed eight (8) years, unless the coating or lining owner can establish, document, and show that the service history or scientific analysis of the coating or lining and commodity pairing supports a longer inspection interval. The owner must maintain at its principal place of business a written procedure for collecting and documenting the performance of the coating or lining applied within the tank car for its service life. The internal coating or lining owner must provide this documentation, including inspection and test, repair, removal, and application procedures, to the FRA or car owner upon request. Further, the offeror must provide commodity information to the car owner and the owner of the internal coating or lining upon request.

(3) The owner of the internal coating or lining must provide the test method and acceptance criteria to the tank car owner and to the person responsible for qualifying the coating or lining. The tank car facility inspecting and testing the internal coating or lining must follow the inspection and test procedure, including the acceptance requirements, established by the internal coating or lining owner.

(j) *Leakage pressure test.* Unless the design of the service equipment arrangement precludes it (e.g., there is no fitting to pressurize the tank), each owner of a tank car must ensure that the tank, service equipment, and closures installed, replaced, or reinstalled on the tank car are leak tested. The test may be conducted with the lading

in the tank. When the test pressure exceeds the start-to-discharge or burst pressure of a pressure relief device, the device must be rendered inoperative. The written procedures and test method for leak testing must ensure the sensitivity and reliability of the test method to prevent premature failure. This section does not apply to facilities that remove closures for the sole purpose of loading or unloading the lading (e.g., blind flanges, pipe plugs, etc.).

(k) *Service equipment inspection and test.* (1) Each tank car owner must ensure the qualification of tank car service equipment at least once every ten (10) years. The tank car owner must analyze the service equipment inspection and test results for any given lading and, based on the analysis, adjust the inspection and test frequency to ensure that the design level of reliability and safety of the equipment is met. The owner must maintain at its principal place of business all supporting documentation used to make such analyses and inspection and test frequency adjustments. The supporting documentation must be made available to FRA or an authorized representative of the Department upon request.

(2) Each tank car facility must qualify service equipment, including reclosing pressure relief devices and interior heater systems in accordance with the applicable provisions of Appendix D of the AAR Specifications for Tank Cars (IBR, see §171.7 of this subchapter).

(l) *Alternative inspection and test procedures.* When approved by the Associate Administrator for Railroad Safety, FRA, a tank car owner, or a coating or lining owner may use an alternative inspection and test procedure or interval based on a damage-tolerance analysis (that must include a determination of the probable locations and modes of damage due to fatigue, corrosion, and accidental damage), or based on a service reliability assessment (that must be supported by analysis of systematically collected data) in lieu of the other requirements of this section.

(m) *Inspection and test compliance date for tank cars.* (1) After July 1, 2000, each tank car with a metal jacket or with a thermal protection system shall have an inspection and test conforming to this section no later than the date the tank car requires a periodic hydrostatic pressure test (*i.e.*, the marked due date on the tank car for the hydrostatic test).

(2) After July 1, 1998, each tank car without a metal jacket shall have an inspection and test conforming to this section no later than the date the tank car requires a periodic hydrostatic pressure test (i.e., the marked due date on the tank car for the hydrostatic test).

(3) For tank cars on a 20-year periodic hydrostatic pressure test interval (i.e., Class DOT 103W, 104W, 111A60W1, 111A100W1, and 111A100W3 tank cars), the next inspection and test date is the midpoint between the compliance date in paragraph (l)(1) or (2) of this section and the remaining years until the tank would have had a hydrostatic pressure test.

[Amdt. 180–8, 60 FR 49079, Sept. 21, 1995, as amended by Amdt. 179–50, 61 FR 33256, June 26, 1996; 62 FR 51561, Oct. 1, 1997; 63 FR 52851, Oct. 1, 1998; 66 FR 45391, Aug. 28, 2001; 68 FR 75765, Dec. 31, 2003; 71 FR 54398, Sept. 14, 2006; 77 FR 37987, June 25, 2012]

§ 180.511 Acceptable results of inspections and tests.

Provided it conforms to other applicable requirements of this subchapter, a tank car is qualified for use if it successfully passes the inspections and tests set forth below conducted in accordance with this subpart. A representation of that qualification must consist of marking the tank in accordance with §180.515.

(a) *Visual inspection.* A tank car successfully passes the visual inspection when the inspection shows no structural defect that may cause leakage from or failure of the tank before the next inspection and test interval.

(b) *Structural integrity inspection and test.* A tank car successfully passes the structural integrity inspection and test when it shows no structural defect that may initiate cracks or propagate cracks and cause failure of the tank before the next inspection and test interval.

(c) *Service life shell thickness.* A tank car successfully passes the service life shell thickness inspection when the

tank shell and heads show no thickness reduction below that allowed in § 180.509(g).

(d) *Safety system inspection.* A tank car successfully passes the safety system inspection when each thermal protection system, tank head puncture resistance system, coupler vertical restraint system, and system used to protect discontinuities (e.g., breakage grooves on bottom outlets and protective housings) on the tank car conform to this subchapter and show no indication of a defect that may reduce reliability before the next inspection and test interval.

(e) *Lining and coating inspection.* A tank car successfully passes the lining and coating inspection and test when the lining or coating conforms to the owner's acceptance criteria.

(f) *Leakage pressure test.* A tank car successfully passes the leakage pressure test when all product piping, fittings and closures show no indication of leakage.

(g) *Hydrostatic test.* A Class 107 tank car, the inner tank of a Class 115 tank car, or a riveted tank car successfully passes the hydrostatic test when it shows no leakage, distortion, excessive permanent expansion, or other evidence of weakness that might render the tank car unsafe for transportation service.

(h) *Service equipment.* A tank car successfully passes the service equipment inspection and test when this equipment conforms to this subchapter and applicable provisions of Appendix D of the AAR Specifications for Tank Cars (IBR, see § 171.7 of this subchapter), and shows no indication of a defect that may reduce reliability during the qualification interval.

[Amdt. 180–8, 60 FR 49079, Sept. 21, 1995, as amended by Amdt. 179–50, 61 FR 33256, June 26, 1996; 66 FR 45187, Aug. 28, 2001; 77 FR 37990, June 25, 2012]

§ 180.513 Repairs, alterations, conversions, and modifications.

(a) To work on tank cars, a tank car facility must comply with the applicable requirements of this subpart, the AAR Specifications for Tank Cars (IBR, see § 171.7 of this subchapter), and the owner's requirements.

(b) *Responsibilities of Tank Car Facility.* A tank car facility must obtain the permission of the equipment owner before performing work affecting alteration, conversion, repair, or qualification of the owner's equipment. For the purposes of qualification and maintenance, the tank car facility must use the written instructions furnished by the owner or have written confirmation from the owner allowing the use of written instructions furnished by the owner or have written confirmation from the owner allowing the use of written instructions furnished by another. A tank car facility must not use, copy distribute, forward or provide to another person the owner's confidential and proprietary written instructions, procedures, manuals, and records without the owner's permission. A tank car facility must report all work performed to the owner. The tank car facility must also report observed damage, deterioration, failed components, or non-compliant parts to the owner. A tank car facility must incorporate the owner's Quality Assurance Program into their own Quality Assurance Program.

(c) Unless the exterior tank car shell or interior tank car jacket has a protective coating, after a repair that requires the complete removal of the tank car jacket, the exterior tank car shell and the interior tank car jacket must have a protective coating applied to prevent the deterioration of the tank shell and tank jacket. Previously applied coatings that still provide effective protection need not be covered over.

(d) After repair, replacement, or qualification of tank car service equipment, the tank service equipment must successfully pass the leak test prescribed in § 180.509(j).

[77 FR 37990, June 25, 2012]

§ 180.515 Markings.

(a) When a tank car passes the required inspection and test with acceptable results, the tank car facility must mark the date of the inspection and test and due date of the next inspection and test qualified on the tank car in accordance with the applicable provisions of Appendix C of the AAR Specifications for Tank Cars (IBR, see § 171.7

of this subchapter). When a tank car facility performs multiple inspections and tests at the same time, one date may be used to satisfy the requirements of this section. One date also may be shown when multiple inspections and tests have the same due date. Dates displayed on the ''consolidated stencil'' (see the applicable provisions of Appendix C of the AAR Specifications for Tank Cars) take precedence over dates modified, and not stenciled, pursuant to interval adjustments for service equipment, linings, and granted alternative inspection intervals.

(b) Converted DOT 105, 109, 112, 114, or 120 class tank cars must have the new specification and conversion date permanently marked in letters and figures at least 0.95 cm (0.375 inch) high on the outside of the manway nozzle or the edge of the manway nozzle flange on the left side of the car. The marking may have the last numeral of the specification number omitted (e.g., ''DOT 111A100W'' instead of ''DOT 111A100W1'').

(c) When qualified within six months of installation and protected from deterioration, the test date marking of a reclosing pressure relief device is the installation date on the tank car.

[Amdt. 180–8, 60 FR 49079, Sept. 21, 1995, as amended by Amdt. 179–50, 61 FR 33256, June 26, 1996; 63 FR 52851, Oct. 1, 1998; 66 FR 45391, Aug. 28, 2001; 68 FR 75765, Dec. 31, 2003; 77 FR 37991, June 25, 2012]

§ 180.517 Reporting and record retention requirements.

(a) *Certification and representation.* Each owner of a specification tank car must retain the certificate of construction (AAR Form 4–2) and related papers certifying that the manufacture of the specification tank car identified in the documents is in accordance with the applicable specification. The builder's signature on the certificate of construction and the marking of the tank car with the tank specification is the representation that all of the appropriate inspections and tests were successfully performed to qualify the tank for use. The owner must retain the documents throughout the period of ownership of the specification tank car and for one year thereafter. Upon a change of ownership, the applicable provisions prescribed in Section 1.3.15 of the AAR Specifications for Tank Cars (IBR, see § 171.7 of this subchapter) apply. The builder of the car or a facility performing work on the car may retain copies of relevant records.

(b) *Inspection and test reporting.* Each tank car that is inspected and tested as specified in § 180.509 must have a written report, in English, prepared according to this paragraph. Marking the tank car with the specification (or retaining the specification marking on the tank) is the representation that all of the appropriate inspections and tests were performed and the results meet the tank car owner's acceptance criteria to qualify the car for continued use. The report may be created and retained electronically, but, upon request by FRA for a copy of the report, it must be made available in common readable form. The owner must retain a copy of the inspection and test reports until successfully completing the next inspection and test of the same type. The inspection and test report must include the following:

(1) Type of inspection and test performed (a checklist is acceptable);

(2) The results of each inspection and test performed;

(3) Tank car reporting mark and number;

(4) Tank car specification;

(5) Inspection and test date (month and year);

(6) Location and description of defects found and method used to repair each defect;

(7) The name and address of the tank car facility and the name and signature of inspector; and

(8) The unique code (station stencil) identifying the facility.

[Amdt. 180–2, 54 FR 25032, June 12, 1989, as amended at 68 FR 75765, Dec. 31, 2003; 77 FR 37991, June 25, 2012]

§ 180.519 Periodic retest and inspection of tank cars other than single-unit tank car tanks.

(a) *General.* Unless otherwise provided in this subpart, tanks designed to be removed from cars for filling and emptying and tanks built to a Class DOT 107A specification and their safety relief devices must be retested periodically as specified in Retest Table 1 of

paragraph (b)(5) of this section. Retests may be made at any time during the calendar year the retest falls due.

(b) *Pressure test.* (1) Each tank must be subjected to the specified hydrostatic pressure and its permanent expansion determined. Pressure must be maintained for 30 seconds and for as long as necessary to secure complete expansion of the tank. Before testing, the pressure gauge must be shown to be accurate within 1 percent at test measure. The expansion gauge must be shown to be accurate, at test pressure, to within 1 percent. Expansion must be recorded in cubic cm. Permanent volumetric expansion may not exceed 10 percent of total volumetric expansion at test pressure and the tank must not leak or show evidence of distress.

(2) Each tank, except tanks built to specification DOT 107A, must also be subjected to interior air pressure test of at least 100 psig under conditions favorable to detection of any leakage. No leaks may appear.

(3) Safety relief valves must be retested by air or gas, must start-to-discharge at or below the prescribed pressure and must be vapor tight at or above the prescribed pressure.

(4) Rupture discs and fusible plugs must be removed from the tank and visually inspected.

(5) Tanks must be retested as specified in Retest Table 1 of this paragraph (b)(5), and before returning to service after repairs involving welding or heat treatment:

RETEST TABLE 1

Specification	Retest interval—years		Minimum Retest pressure—psig		Pressure relief valve pressure—psig	
	Tank	Pressure relief devices [d]	Tank hydrostatic expansion [c]	Tank air test	Start-to-discharge	Vapor tight
DOT 27	5	2	500	100	375	300
106A500	5	2	500	100	375	300
106A500X	5	2	500	100	375	300
106A800	5	2	800	100	600	480
106A800X	5	2	800	100	600	480
106A800NCI	5	2	800	100	600	480
107A * * * *	[d]5	[a]2	([b])	None	None	None
110A500–W	5	2	500	100	375	300
110A600–W	5	2	600	100	500	360
110A800–W	5	2	800	100	600	480
110A1000–W	5	2	1,000	100	750	600
BE–27	5	2	500	100	375	300

NOTES:

[a] If DOT 107A * * * * tanks are used for transportation of flammable gases, one rupture disc from each car must be burst at the interval prescribed. The sample disc must burst at a pressure not exceeding the marked test pressure of the tank and not less than 70 percent of the marked test pressure. If the sample disc does not burst within the prescribed limits, all discs on the car must be replaced.

[b] The hydrostatic expansion test pressure must at least equal the marked test pressure.

[c] See § 180.519(b)(1).

[d] Safety relief valves of the spring-loaded type on tanks used exclusively for fluorinated hydrocarbons and mixtures thereof which are free from corroding components may be retested every 5 years.

(6) The month and year of test, followed by a ''V'' if visually inspected as described in paragraph (c) of this section, must be plainly and permanently stamped into the metal of one head or chime of each tank with successful test results; for example, 01–90 for January 1990. On DOT 107A**** tanks, the date must be stamped into the metal of the marked end, except that if all tanks mounted on a car have been tested, the date may be stamped into the metal of a plate permanently applied to the bulkhead on the ''A'' end of the car. Dates of previous tests and all prescribed markings must be kept legible.

(c) *Visual inspection.* Tanks of Class DOT 106A and DOT 110A-W specifications (§§ 179.300 and 179.301 of this subchapter) used exclusively for transporting fluorinated hydrocarbons and mixtures thereof, and that are free from corroding components, may be given a periodic complete internal and external visual inspection in place of the periodic hydrostatic retest. Visual

inspections shall be made only by competent persons. The tank must be accepted or rejected in accordance with the criteria in CGA C–6 (IBR, see § 171.7 of this subchapter).

(d) *Written records.* The results of the pressure test and visual inspection must be recorded on a suitable data sheet. Completed copies of these reports must be retained by the owner and by the person performing the pressure test and visual inspection as long as the tank is in service. The information to be recorded and checked on these data sheets are: Date of test and inspection; DOT specification number; tank identification (registered symbol and serial number, date of manufacture and ownership symbol); type of protective coating (painted, etc., and statement as to need for refinishing or recoating); conditions checked (leakage, corrosion, gouges, dents or digs, broken or damaged chime or protective ring, fire, fire damage, internal condition); test pressure; results of tests; and disposition of tank (returned to service, returned to manufacturer for repair, or scrapped); and identification of the person conducting the retest or inspection.

[Amdt. 180–8, 60 FR 49079, Sept. 21, 1995, as amended by Amdt. 179–50, 61 FR 33257, June 26, 1996; 65 FR 58633, Sept. 29, 2000; 66 FR 45187, 45392, Aug. 28, 2001; 68 FR 75765, Dec. 31, 2003]

Subpart G—Qualification and Maintenance of Portable Tanks

SOURCE: 66 FR 33453, June 21, 2001, unless otherwise noted.

§ 180.601 Applicability.

This subpart prescribes requirements, in addition to those contained in parts 107, 171, 172, 173, and 178 of this subchapter, applicable to any person responsible for the continuing qualification, maintenance or periodic retesting of a portable tank.

§ 180.603 Qualification of portable tanks.

(a) Each portable tank used for the transportation of hazardous materials must be an authorized packaging.

(b) To qualify as an authorized packaging, each portable tank must conform to the requirements of this subchapter and the applicable design specification to which the portable tank was constructed.

(c) The following portable tanks are authorized for use provided they conform to all applicable safety requirements of this subchapter: 51, 56, 57, 60, IM 101, IM 102 and UN portable tanks.

(d) A portable tank that also meets the definition of ''container'' in 49 CFR 450.3(a)(3) must conform to the requirements in parts 450 through 453 of this title for compliance with Annex II of the Convention for Safe Containers (CSC).

(e) *Exemption portable tanks based on DOT 51 portable tanks.* The owner of a portable tank constructed in accordance with and used under an exemption issued prior to August 31, 1996, which was in conformance with the requirements for Specification DOT 51 portable tanks with the exception of the location of fill and discharge outlets, shall examine the portable tank and its design to determine if it meets the outlet requirements in effect on October 1, 1996. If the owner determines that the portable tank is in compliance with all requirements of the DOT 51 specification, the exemption number stenciled on the portable tank shall be removed and the specification plate (or a plate placed adjacent to the specification plate) shall be durably marked ''DOT 51–E*****'' (where ***** is to be replaced by the exemption number). During the period the portable tank is in service, and for one year thereafter, the owner of the portable tank must retain on file, at its principal place of business, a copy of the last exemption in effect.

§ 180.605 Requirements for periodic testing, inspection and repair of portable tanks.

(a) A portable tank constructed in accordance with a DOT specification for which a test or inspection specified in this subpart has become due, must be tested or inspected prior to being returned for transportation.

(b) *Conditions requiring test and inspection of portable tanks.* Without regard to any other test or inspection requirements, a Specification or UN portable tank must be tested and inspected in

accordance with this section prior to further use if any of the following conditions exist:

(1) The portable tank shows evidence of dents, corroded or abraded areas, leakage, or any other condition that might render it unsafe for transportation service.

(2) The portable tank has been in an accident and has been damaged to an extent that may adversely affect its ability to retain the hazardous material.

(3) The portable tank has been out of hazardous materials transportation service for a period of one year or more.

(4) The portable tank has been modified from its original design specification.

(5) The portable tank is in an unsafe operating condition based on the existence of probable cause.

(c) *Schedule for periodic inspections and tests.* Each Specification portable tank must be tested and inspected in accordance with the following schedule:

(1) Each IM or UN portable tank must be given an initial inspection and test before being placed into service, a periodic inspection and test at least once every 5 years, and an intermediate periodic inspection and test at least every 2.5 years following the initial inspection and the last 5 year periodic inspection and test.

(2) Each Specification 51 portable tank must be given a periodic inspection and test at least once every five years.

(3) Each Specification 56 or 57 portable tank must be given a periodic inspection and test at least once every 2.5 years.

(4) Each Specification 60 portable tank must be given a periodic inspection and test at the end of the first 4-year period after the original test; at least once every 2 years thereafter up to a total of 12 years of service; and at least once annually thereafter. Retesting is not required on a rubber-lined tank except before each relining.

(d) *Intermediate periodic inspection and test.* For IM and UN portable tanks the intermediate 2.5 year periodic inspection and test must include at least an internal and external examination of the portable tank and its fittings taking into account the hazardous materials intended to be transported; a leakage test; and a test of the satisfactory operation of all service equipment. Sheathing, thermal insulation, etc. need only be removed to the extent required for reliable appraisal of the condition of the portable tank. For portable tanks intended for the transportation of a single hazardous material, the internal examination may be waived if it is leakage tested in accordance with the procedures in paragraph (h) of this section prior to each filling, or if approved by the Associate Administrator. Portable tanks used for dedicated transportation of refrigerated liquefied gases that are not fitted with inspection openings are excepted from the internal inspection requirement.

(e) *Periodic inspection and test.* The 5 year periodic inspection and test must include an internal and external examination and, unless excepted, a pressure test as specified in this section. Sheathing, thermal insulation, etc. need only to be removed to the extent required for reliable appraisal of the condition of the portable tank. Except for DOT Specification 56 and 57 portable tanks, reclosing pressure relief devices must be removed from the tank and tested separately unless they can be tested while installed on the portable tank. For portable tanks where the shell and equipment have been pressure-tested separately, after assembly they must be subjected together to a leakage test and effectively tested and inspected for corrosion. Portable tanks used for the transportation of refrigerated, liquefied gases are excepted from the requirement for internal inspection and the hydraulic pressure test during the 5-year periodic inspection and test, if the portable tanks were pressure tested to a minimum test pressure of 1.3 times the design pressure using an inert gas as prescribed in § 178.338–16(a) and (b) of this subchapter before putting the portable tank into service initially and after any exceptional inspections and tests specified in paragraph (f) of this section.

(f) *Exceptional inspection and test.* The exceptional inspection and test is necessary when a portable tank shows evidence of damaged or corroded areas, or leakage, or other conditions that indicate a deficiency that could affect the integrity of the portable tank. The extent of the exceptional inspection and test must depend on the amount of damage or deterioration of the portable tank. It must include at least the inspection and a pressure test according to paragraph (e) of this section. Pressure relief devices need not be tested or replaced unless there is reason to believe the relief devices have been affected by the damage or deterioration.

(g) *Internal and external examination.* The internal and external examinations must ensure that:

(1) The shell is inspected for pitting, corrosion, or abrasions, dents, distortions, defects in welds or any other conditions, including leakage, that might render the portable tank unsafe for transportation;

(2) The piping, valves, and gaskets are inspected for corroded areas, defects, and other conditions, including leakage, that might render the portable tank unsafe for filling, discharge or transportation;

(3) Devices for tightening manhole covers are operative and there is no leakage at manhole covers or gaskets;

(4) Missing or loose bolts or nuts on any flanged connection or blank flange are replaced or tightened;

(5) All emergency devices and valves are free from corrosion, distortion and any damage or defect that could prevent their normal operation. Remote closure devices and self-closing stop-valves must be operated to demonstrate proper operation;

(6) Required markings on the portable tank are legible and in accordance with the applicable requirements; and

(7) The framework, the supports and the arrangements for lifting the portable tank are in satisfactory condition.

(h) *Pressure test procedures for specification 51, 56, 57, 60, IM or UN portable tanks.* (1) Each Specification 57 portable tank must be leak tested by a minimum sustained air pressure of at least 3 psig applied to the entire tank. Each Specification 51 or 56 portable tank must be tested by a minimum pressure (air or hydrostatic) of at least 2 psig or at least one and one-half times the design pressure (maximum allowable working pressure, or re-rated pressure) of the tank, whichever is greater. The leakage test for portable tanks used for refrigerated liquefied gas must be performed at 90% of MAWP. Leakage tests for all other portable tanks must be at a pressure of at least 25% of MAWP. During each air pressure test, the entire surface of all joints under pressure must be coated with or immersed in a solution of soap and water, heavy oil, or other material suitable for the purpose of detecting leaks. The pressure must be held for a period of time sufficiently long to assure detection of leaks, but in no case less than five minutes. During the air or hydrostatic test, relief devices may be removed, but all the closure fittings must be in place and the relief device openings plugged. Lagging need not be removed from a lagged tank if it is possible to maintain the required test pressure at constant temperature with the tank disconnected from the source of pressure.

(2) Each Specification 60 portable tank must be retested by completely filling the tank with water or other liquid having a similar viscosity, the temperature of the liquid must not exceed 37.7 °C (100 °F) during the test, and applying a pressure of 60 psig. The portable tank must be capable of holding the prescribed pressure for at least 10 minutes without leakage, evidence of impending failure, or failure. All closures shall be in place while the test is made and the pressure shall be gauged at the top of the tank. Safety devices and/or vents shall be plugged during this test.

(3) Each Specification IM or UN portable tank, except for UN portable tanks used for non-refrigerated and refrigerated liquefied gases, and all piping, valves and accessories, except pressure relief devices, must be hydrostatically tested with water, or other liquid of similar density and viscosity, to a pressure not less than 150% of its maximum allowable working pressure. UN portable tanks used for the transportation of non-refrigerated liquefied gases must be hydrostatically tested with water, or other liquid of

similar density and viscosity, to a pressure not less than 130% of its maximum allowable working pressure. UN portable tanks used for the transportation of refrigerated liquefied gases may be tested hydrostatically or pneumatically using an inert gas to a pressure not less than 1.3 times the design pressure. For pneumatic testing, due regard for protection of all personnel must be taken because of the potential hazard involved in such a test. The pneumatic test pressure in the portable tank must be reached by gradually increasing the pressure to one-half of the test pressure. Thereafter, the test pressure must be increased in steps of approximately one-tenth of the test pressure until the required test pressure has been reached. The pressure must then be reduced to a value equal to four-fifths of the test pressure and held for a sufficient time to permit inspection of the portable tank for leaks. The minimum test pressure for a portable tank is determined on the basis of the hazardous materials that are intended to be transported in the portable tanks. For liquid, solid and non-refrigerated liquefied gases, the minimum test pressure for specific hazardous materials are specified in the applicable T Codes assigned to a particular hazardous material in the § 172.101 Table of this subchapter. While under pressure the tank shall be inspected for leakage, distortion, or any other condition which might render the tank unsafe for service. A portable tank fails to meet the requirements of the pressure test if, during the test, there is permanent distortion of the tank exceeding that permitted by the applicable specification; if there is any leakage; or if there are any deficiencies that would render the portable tank unsafe for transportation. Any portable tank that fails must be rejected and may not be used again for the transportation of a hazardous material unless the tank is adequately repaired, and, thereafter, a successful test is conducted in accordance with the requirements of this paragraph. An approval agency shall witness the hydrostatic or pneumatic test. Any damage or deficiency that might render the portable tank unsafe for service shall be repaired to the satisfaction of the witnessing approval agency. The repaired tank must be retested to the original pressure test requirements. Upon successful completion of the hydrostatic or pneumatic test, as applicable, the witnessing approval agency shall apply its name, identifying mark or identifying number in accordance with paragraph (k) of this section.

(i) *Rejection criteria.* When evidence of any unsafe condition is discovered, the portable tank may not be returned to service until it has been repaired and the pressure test is repeated and passed.

(j) *Repair.* The repair of a portable tank is authorized, provided such repairs are made in accordance with the requirements prescribed in the specification for the tank's original design and construction. In addition to any other provisions of the specification, no portable tank may be repaired so as to cause leakage or cracks or so as to increase the likelihood of leakage or cracks near areas of stress concentration due to cooling metal shrinkage in welding operations, sharp fillets, reversal of stresses, or otherwise. No field welding may be done except to nonpressure parts. Any cutting, burning or welding operations on the shell of an IM or UN portable tank must be done with the approval of the approval agency and be done in accordance with the requirements of this subchapter, taking into account the pressure vessel code used for the construction of the shell. A pressure test to the original test pressure must be performed after the work is completed.

(k) *Inspection and test markings.* (1) Each IM or UN portable tank must be durably and legibly marked, in English, with the date (month and year) of the last pressure test, the identification markings of the approval agency witnessing the test, when required, and the date of the last visual inspection. The marking must be placed on or near the metal identification plate, in letters and numerals of not less than 3 mm (0.118 inches) high when on the metal identification plate, and 12 mm (0.47 inches) high when on the portable tank.

(2) Each Specification DOT 51, 56, 57 or 60 portable tank must be durably and legibly marked, in English, with

the date (month and year) of the most recent periodic retest. The marking must be placed on or near the metal certification plate and must be in accordance with §178.3 of this subchapter. The letters and numerals must not be less than 3 mm (0.118 inches) high when on the metal certification plate, and 12 mm (0.47 inches) high when on the portable tank, except that a portable tank manufactured under a previously authorized specification may continue to be marked with smaller markings if originally authorized under that specification (for example, DOT Specification 57 portable tanks).

(l) *Record retention*. The owner of each portable tank or his authorized agent shall retain a written record of the date and results of all required inspections and tests, including an ASME manufacturer's date report, if applicable, and the name and address of the person performing the inspection or test, in accordance with the applicable specification. The manufacturer's data report, including a certificate(s) signed by the manufacturer, and the authorized design approval agency, as applicable, indicating compliance with the applicable specification of the portable tank, must be retained in the files of the owner, or his authorized agent, during the time that such portable tank is used for such service, except for Specifications 56 and 57 portable tanks.

[Amdt. 180–2, 54 FR 25032, June 12, 1989, as amended at 67 FR 15744, Apr. 3, 2002; 68 FR 45042, July 31, 2003; 74 FR 53189, Oct. 16, 2009]

APPENDIX A TO PART 180—INTERNAL SELF-CLOSING STOP VALVE EMERGENCY CLOSURE TEST FOR LIQUEFIED COMPRESSED GASES

1. In performing this test, all internal self-closing stop valves must be opened. Each emergency discharge control remote actuator (on-truck and off-truck) must be operated to ensure that each internal self-closing stop valve's lever, piston, or other valve indicator has moved to the closed position.

2. On pump-actuated pressure differential internal valves, the three-way toggle valve handle or its cable attachment must be activated to verify that the toggle handle moves to the closed position.

[64 FR 28052, May 24, 1999, as amended at 67 FR 15744, Apr. 3, 2002]

APPENDIX B TO PART 180—ACCEPTABLE INTERNAL SELF-CLOSING STOP VALVE LEAKAGE TESTS FOR CARGO TANKS TRANSPORTING LIQUEFIED COMPRESSED GASES

For internal self-closing stop valve leakage testing, leakage is defined as any leakage through the internal self-closing valve or to the atmosphere that is detectable when the valve is in the closed position. On some valves this will require the closure of the pressure by-pass port.

(a) Meter Creep Test.

1. An operator of a cargo tank equipped with a calibrated meter may check the internal self-closing stop valve for leakage through the valve seat using the meter as a flow measurement indicator. The test is initiated by starting the delivery process or returning product to the cargo tank through the delivery system. This may be performed at an idle. After the flow is established, the operator closes the internal self-closing stop valve and monitors the meter flow. The meter flow must stop within 30 seconds with no meter creep within 5 seconds after the meter stops.

2. On pump-actuated pressure differential internal self-closing stop valves, the valve must be closed with the remote actuator to assure that it is functioning. On other types of internal self-closing stop valves, the valve(s) may be closed using either the normal valve control or the discharge control system (e.g., remote).

3. Rejection criteria: Any detectable meter creep within the first five seconds after initial meter stoppage.

(b) Internal Self-Closing Stop Valve Test.

An operator of a cargo tank that is not equipped with a meter may check the internal self-closing stop valve(s) for leakage as follows:

1. The internal self-closing stop valve must be in the closed position.

2. All of the material in the downstream piping must be evacuated, and the piping must be returned to atmospheric temperature and pressure.

3. The outlet must be monitored for 30 seconds for detectable leakage.

4. Rejection criteria. Any detectable leakage is considered unacceptable.

[64 FR 28052, May 24, 1999]

APPENDIX C TO PART 180—EDDY CURRENT EXAMINATION WITH VISUAL INSPECTION FOR DOT 3AL CYLINDERS MANUFACTURED OF ALUMINUM ALLOY 6351–T6

1. *Examination Procedure*. Each facility performing eddy current examination with visual inspection must develop, update, and maintain a written examination procedure applicable to the test equipment it uses to perform eddy current examinations.

2. *Visual examinations*. Visual examinations of the neck and shoulder area of the cylinder must be conducted in accordance with CGA pamphlet C–6.1 (IBR; see §171.7 of this subchapter).

3. *Eddy Current Equipment*. A reference ring and probe for each DOT–3AL cylinder manufactured of aluminum alloy 6351–T6 to be inspected must be available at the examination facility. Eddy current equipment must be capable of accurately detecting the notches on the standard reference ring.

4. *Eddy Current Reference Ring*. The reference ring must be produced to represent each cylinder to be tested. The reference ring must include artificial notches to simulate a neck crack. The size of the artificial notch (depth and length) must have a depth less than or equal to ⅓ of the wall thickness of the neck and a length greater than or equal to two threads. The standard reference must have a drawing that includes the diameter of the ring, and depth and length of each notch.

5. *Condemnation Criteria*. A cylinder must be condemned if the eddy current examination combined with visual examination reveals any crack in the neck or shoulder of 2 thread lengths or more.

6. *Examination equipment records*. Records of eddy current inspection equipment shall contain the following information:

(i) Equipment manufacturer, model number and serial number.

(ii) Probe description and unique identification (*e.g.*, serial number, part number, etc.).

7. *Eddy current examination reporting and record retention requirements*. Daily records of eddy current examinations must be maintained by the person who performs the requalification until either the expiration of the requalification period or until the cylinder is again requalified, whichever occurs first. These records shall be made available for inspection by a representative of the Department on request. Eddy current examination records shall contain the following information:

(i) Specification of each standard reference ring used to perform the eddy current examination.

(ii) DOT specification or exemption number of the cylinder; manufacturer's name or symbol; owner's name or symbol, if present; serial number; and, date of manufacture.

(iii) Name of test operator performing the eddy current examination.

(iv) Date of eddy current examination.

(vi) Acceptance/condemnation results (*e.g.* pass or fail).

(vii) Retester identification number.

8. *Personnel Qualification Requirements*. Each person who performs eddy current and visual examinations, and evaluates and certifies retest results must be certified by the employer that he/she has been properly trained and tested in the eddy current and visual examination procedures.

9. *Training Records*. A record of current training must be maintained for each employee who performs eddy current and visual examinations in accordance with §172.704(d).

[71 FR 51129, Aug. 29, 2006]

APPENDIX D TO PART 180—HAZARDOUS MATERIALS CORROSIVE TO TANKS OR SERVICE EQUIPMENT

This list contains materials identified either by proper shipping name in 49 CFR 172.101 or shipped under an ''n.o.s.'' shipping description that, under certain conditions, can corrode carbon steel tanks or service equipment at a rate that may reduce the design level of reliability and safety of the tank or equipment to an unsafe level before the next qualification. Materials identified on this list are considered corrosive to the tank or service equipment.

While every effort was made to identify materials deemed corrosive to the tank or service equipment, owners and operators are cautioned that this list may not be inclusive. Tank car owners and operators are reminded of their duty to ensure that no in-service tank will deteriorate below the specified minimum thickness requirements in this subchapter. See §180.509(f)(3). In addition, FRA states a tank car owner must designate an internal coating or lining appropriately based on its knowledge of the chemical and not rely simply on this list. Regarding future thickness tests, this list may also be modified based on an analysis of the test results by the car owner, the Department of Transportation, or the Association of American Railroads' Tank Car Committee.

Hazardous Materials Table Proper Shipping Names (See §172.101)

Acetic acid, glacial or Acetic acid solution
Aluminum chloride, solution
Arsenic acid, liquid
Arsenic acid, solid
Butyric acid
Ferric chloride, solution
Fertilizer ammoniating solution (*Nitrogen fertilizer solution*)
Fluoroboric acid

Fluorosilicic acid
Formaldehyde, solutions, flammable
Formaldehyde, solutions
Hydrobromic acid
Hydrochloric acid
Hydrochloric acid solution
Hydrofluoric acid and Sulfuric acid mixtures
Hydrofluoric acid
Hydrogen peroxide and peroxyacetic acid mixtures, stabilized
Hydrogen, peroxide, aqueous solutions
Hydrogen peroxide, stabilized *or* Hydrogen peroxide aqueous solutions, stabilized
Hypochlorite solutions
Nitric acid
Phenyl phosphorus dichloride
Phenyl phosphorus thiodichloride
Phosphoric acid solution
Phosphoric acid, solid
Phosphorus trichloride (*Phosphorus chloride*)
Sodium chlorate
Sodium chlorate, aqueous solution
Sodium hydrosulfide
Sulfur, molten
Sulfuric acid
Sulfuric acid, fuming
Sulfuric acid, spent
Zinc chloride, anhydrous
Zinc chloride, solution

Materials Transported Under an ''N.O.S.'' Description

Benzoic acid (Environmentally hazardous substance, liquid, n.o.s., (RQ 5,000 pounds)
Bisulphites, aqueous solution, n.o.s. (Ammonium bisulfide)
Black liquor (Corrosive liquids, n.o.s. (contains sulfuric acid))
Calcium lignosulfonate (not regulated under this subchapter)
Hexanoic acid (Corrosive liquids, n.o.s. (contains hexanoic acid))
Lignin liquor (not regulated under this subchapter)
Lithium chloride (not regulated under this subchapter)
Sodium polyacrylate (not regulated under this subchapter)
Titanium sulfate solution (Corrosive liquids, n.o.s. (contains sulfuric acid))
White liquor (not regulated under this subchapter)

[77 FR 37991, June 25, 2012]

PARTS 181–185 [RESERVED]

SUBCHAPTER D—PIPELINE SAFETY

PARTS 186–189 [RESERVED]

PART 190—PIPELINE SAFETY ENFORCEMENT AND REGULATORY PROCEDURES

Subpart A—General

Sec.
190.1 Purpose and scope.
190.3 Definitions.
190.5 Service.
190.7 Subpoenas; witness fees.
190.9 Petitions for finding or approval.
190.11 Availability of informal guidance and interpretive assistance.

Subpart B—Enforcement

190.201 Purpose and scope.
190.203 Inspections and investigations.
190.205 Warnings.
190.206 Amendment of plans or procedures.
190.207 Notice of probable violation.
190.208 Response options.
190.209 Case file.
190.210 Separation of functions.
190.211 Hearing.
190.212 Presiding official, powers, and duties.
190.213 Final order.
190.215 Reserved.

COMPLIANCE ORDERS

190.217 Compliance orders generally.
190.219 Consent order.

CIVIL PENALTIES

190.221 Civil penalties generally.
190.223 Maximum penalties.
190.225 Assessment considerations.
190.227 Payment of penalty.

CRIMINAL PENALTIES

190.229 [Reserved]
190.231 [Reserved]

SPECIFIC RELIEF

190.233 Corrective action orders.
190.235 Injunctive action.
190.237 [Reserved]
190.239 Safety orders.
190.241 Finality.
190.243 Petitions for reconsideration.

Subpart C—Criminal Enforcement

190.291 Criminal penalties generally.
190.293 Referral for prosecution.

Subpart D—Procedures for Adoption of Rules

190.301 Scope.
190.303 Delegations.
190.305 Regulatory dockets.
190.307 Records.
190.309 Where to file petitions.
190.311 General.
190.313 Initiation of rulemaking.
190.315 Contents of notices of proposed rulemaking.
190.317 Participation by interested persons.
190.319 Petitions for extension of time to comment.
190.321 Contents of written comments.
190.323 Consideration of comments received.
190.325 Additional rulemaking proceedings.
190.327 Hearings.
190.329 Adoption of final rules.
190.331 Petitions for rulemaking.
190.333 Processing of petition.
190.335 Petitions for reconsideration.
190.337 Proceedings on petitions for reconsideration.
190.338 Appeals.
190.339 Direct final rulemaking.
190.341 Special permits.

AUTHORITY: 33 U.S.C. 1321(b); 49 U.S.C. 60101 *et seq.*; 49 CFR 1.96.

SOURCE: 45 FR 20413, Mar. 27, 1980, unless otherwise noted.

EDITORIAL NOTE: Nomenclature changes to part 190 appear at 78 FR 58908, Sept. 25, 2013.

Subpart A—General

§ 190.1 Purpose and scope.

(a) This part prescribes procedures used by the Pipeline and Hazardous Materials Safety Administration in carrying out duties regarding pipeline safety under 49 U.S.C. 60101 *et seq.* (the pipeline safety laws) and 33 U.S.C. 1321 (the water pollution control laws).

(b) This subpart defines certain terms and prescribes procedures that are applicable to each proceeding described in this part.

[45 FR 20413, Mar. 27, 1980, as amended by Amdt. 190–6, 61 FR 18512, Apr. 26, 1996; 70 FR 11137, Mar. 8, 2005; Amdt. 190–16, 78 FR 58908, Sept. 25, 2013]

§ 190.3 Definitions.

As used in this part:

Administrator means the Administrator, Pipeline and Hazardous Materials Safety Administration or his or her delegate.

Associate Administrator means the Associate Administrator for Pipeline Safety, or his or her delegate.

Chief Counsel means the Chief Counsel of PHMSA.

Day means a 24-hour period ending at 11:59 p.m. Unless otherwise specified, a day refers to a calendar day.

Hearing means an informal conference or a proceeding for oral presentation. Unless otherwise specifically prescribed in this part, the use of ''hearing'' is not intended to require a hearing on the record in accordance with section 554 of title 5, U.S.C.

OPS means the Office of Pipeline Safety, which is part of the Pipeline and Hazardous Materials Safety Administration, U.S. Department of Transportation.

Operator means any owner or operator.

Person means any individual, firm, joint venture, partnership, corporation, association, State, municipality, cooperative association, or joint stock association, and includes any trustee, receiver, assignee, or personal representative thereof.

Presiding Official means the person who conducts any hearing relating to civil penalty assessments, compliance orders, orders directing amendment, safety orders, or corrective action orders and who has the duties and powers set forth in § 190.212.

Regional Director means the head of any one of the Regional Offices of the Office of Pipeline Safety, or a designee appointed by the Regional Director. Regional Offices are located in Trenton, NJ (Eastern Region); Atlanta, Georgia (Southern Region); Kansas City, Missouri (Central Region); Houston, Texas (Southwest Region); and Lakewood, Colorado (Western Region).

Respondent means a person upon whom OPS has served an enforcement action described in this part.

PHMSA means the Pipeline and Hazardous Materials Safety Administration of the United States Department of Transportation.

State means a State of the United States, the District of Columbia and the Commonwealth of Puerto Rico.

[Amdt. 190–6, 61 FR 18513, Apr. 26, 1996, as amended at 68 FR 11749, Mar. 12, 2003; 70 FR 11137, Mar. 8, 2005; Amdt. 190–15, 74 FR 62505, Nov. 30, 2009; Amdt. 190–16, 78 FR 58908, Sept. 25, 2013]

§ 190.5 Service.

(a) Each order, notice, or other document required to be served under this part will be served personally, by certified mail, overnight courier, or electronic transmission by facsimile or other electronic means that includes reliable acknowledgement of actual receipt.

(b) Service upon a person's duly authorized representative or agent constitutes service upon that person.

(c) Service by certified mail or overnight courier is complete upon mailing. Service by electronic transmission is complete upon transmission and acknowledgement of receipt. An official receipt for the mailing from the U.S. Postal Service or overnight courier, or a facsimile or other electronic transmission confirmation, constitutes prima facie evidence of service.

[45 FR 20413, Mar. 27, 1980, as amended at 73 FR 16567, Mar. 28, 2008; Amdt. 190–16, 78 FR 58909, Sept. 25, 2013]

§ 190.7 Subpoenas; witness fees.

(a) The Administrator, Chief Counsel, or the official designated by the Administrator to preside over a hearing convened in accordance with this part, may sign and issue subpoenas individually on his or her own initiative at any time, including pursuant to an inspection or investigation, or upon request and adequate showing by a participant to an enforcement proceeding that the information sought will materially advance the proceeding.

(b) A subpoena may require the attendance of a witness, or the production of documentary or other tangible evidence in the possession or under the control of person served, or both.

(c) A subpoena may be served personally by any person who is not an interested person and is not less than 18 years of age, or by certified mail.

(d) Service of a subpoena upon the person named in the subpoena is

achieved by delivering a copy of the subpoena to the person and by paying the fees for one day's attendance and mileage, as specified by paragraph (g) of this section. When a subpoena is issued at the instance of any officer or agency of the United States, fees and mileage need not be tendered at the time of service. Delivery of a copy of a subpoena and tender of the fees to a natural person may be made by handing them to the person, leaving them at the person's office with a person in charge, leaving them at the person's residence with a person of suitable age and discretion residing there, by mailing them by certified mail to the person at the last known address, or by any method whereby actual notice is given to the person and the fees are made available prior to the return date.

(e) When the person to be served is not a natural person, delivery of a copy of the subpoena and tender of the fees may be achieved by handing them to a designated agent or representative for service, or to any officer, director, or agent in charge of any office of the person, or by mailing them by certified mail to that agent or representative and the fees are made available prior to the return date.

(f) The original subpoena bearing a certificate of service shall be filed with the official having responsibility for the proceeding in connection with which the subpoena was issued.

(g) A subpoenaed witness shall be paid the same fees and mileage as would be paid to a witness in a proceeding in the district courts of the United States. The witness fees and mileage shall be paid by the person at whose instance the subpoena was issued.

(h) Notwithstanding the provisions of paragraph (g) of this section, and upon request, the witness fees and mileage may be paid by the PHMSA if the official who issued the subpoena determines on the basis of good cause shown, that:

(1) The presence of the subpoenaed witness will materially advance the proceeding; and

(2) The person at whose instance the subpoena was issued would suffer a serious hardship if required to pay the witness fees and mileage.

(i) Any person to whom a subpoena is directed may, prior to the time specified therein for compliance, but in no event more than 10 days after the date of service of such subpoena, apply to the official who issued the subpoena, or if the person is unavailable, to the Administrator to quash or modify the subpoena. The application shall contain a brief statement of the reasons relied upon in support of the action sought therein. The Administrator, or this issuing official, as the case may be, may:

(1) Deny the application;

(2) Quash or modify the subpoena; or

(3) Condition a grant or denial of the application to quash or modify the subpoena upon the satisfaction of certain just and reasonable requirements. The denial may be summary.

(j) Upon refusal to obey a subpoena served upon any person under the provisions of this section, the PHMSA may request the Attorney General to seek the aid of the U. S. District Court for any District in which the person is found to compel that person, after notice, to appear and give testimony, or to appear and produce the subpoenaed documents before the PHMSA, or both.

[45 FR 20413, Mar. 27, 1980, as amended by Amdt. 190–6, 61 FR 18513, Apr. 26, 1996; Amdt. 190–7, 63 FR 7722, Feb. 17, 1998; 70 FR 11137, Mar. 8, 2005; Amdt. 190–16, 78 FR 58909, Sept. 25, 2013]

§ 190.9 Petitions for finding or approval.

(a) In circumstances where a rule contained in parts 192, 193 and 195 of this chapter authorizes the Administrator to make a finding or approval, an operator may petition the Administrator for such a finding or approval.

(b) Each petition must refer to the rule authorizing the action sought and contain information or arguments that justify the action. Unless otherwise specified, no public proceeding is held on a petition before it is granted or denied. After a petition is received, the Administrator or participating state agency notifies the petitioner of the disposition of the petition or, if the request requires more extensive consideration or additional information or

comments are requested and delay is expected, of the date by which action will be taken.

(1) For operators seeking a finding or approval involving intrastate pipeline transportation, petitions must be sent to:

(i) The State agency certified to participate under 49 U.S.C. 60105.

(ii) Where there is no state agency certified to participate, the Administrator, Pipeline and Hazardous Materials Safety Administration, 1200 New Jersey Avenue, SE, Washington, DC 20590.

(2) For operators seeking a finding or approval involving interstate pipeline transportation, petitions must be sent to the Administrator, Pipeline and Hazardous Materials Safety Administration, 1200 New Jersey Avenue, SE, Washington, DC 20590.

(c) All petitions must be received at least 90 days prior to the date by which the operator requests the finding or approval to be made.

(d) The Administrator will make all findings or approvals of petitions initiated under this section. A participating state agency receiving petitions initiated under this section shall provide the Administrator a written recommendation as to the disposition of any petition received by them. Where the Administrator does not reverse or modify a recommendation made by a state agency within 10 business days of its receipt, the recommended disposition shall constitute the Administrator's decision on the petition.

[Amdt. 190–5, 59 FR 17280, Apr. 12, 1994, as amended by Amdt. 190–6, 61 FR 18513, Apr. 26, 1996; 70 FR 11137, Mar. 8, 2005; 73 FR 16566, Mar. 28, 2008]

§ 190.11 Availability of informal guidance and interpretive assistance.

(a) *Availability of telephonic and Internet assistance.* PHMSA has established a Web site and a telephone line to OPS headquarters where information on and advice about compliance with the pipeline safety regulations specified in 49 CFR parts 190–199 is available. The Web site and telephone line are staffed by personnel from PHMSA's OPS from 9:00 a.m. through 5:00 p.m., Eastern Time, Monday through Friday, with the exception of Federal holidays. When the lines are not staffed, individuals may leave a recorded voicemail message or post a message on the OPS Web site. The telephone number for the OPS information line is (202) 366–4595 and the OPS Web site can be accessed via the Internet at *http://phmsa.dot.gov/pipeline*.

(b) *Availability of written interpretations.* A written regulatory interpretation, response to a question, or an opinion concerning a pipeline safety issue may be obtained by submitting a written request to the Office of Pipeline Safety (PHP–30), PHMSA, U.S. Department of Transportation, 1200 New Jersey Avenue SE., Washington, DC 20590–0001. The requestor must include his or her return address and should also include a daytime telephone number. Written requests should be submitted at least 120 days before the time the requestor needs a response.

[Amdt. 190–16, 78 FR 58909, Sept. 25, 2013]

Subpart B—Enforcement

§ 190.201 Purpose and scope.

(a) This subpart describes the enforcement authority and sanctions exercised by the Associate Administrator for achieving and maintaining pipeline safety and compliance under 49 U.S.C. 60101 *et seq.*, 33 U.S.C. 1321(j), and any regulation or order issued thereunder. It also prescribes the procedures governing the exercise of that authority and the imposition of those sanctions.

(b) A person who is the subject of action pursuant to this subpart may be represented by legal counsel at all stages of the proceeding.

[45 FR 20413, Mar. 27, 1980, as amended by Amdt. 190–6, 61 FR 18513, Apr. 26, 1996; Amdt. 190–16, 78 FR 58909, Sept. 25, 2013]

§ 190.203 Inspections and investigations.

(a) Officers, employees, or agents authorized by the Associate Administrator for Pipeline Safety, PHMSA, upon presenting appropriate credentials, are authorized to enter upon, inspect, and examine, at reasonable times and in a reasonable manner, the records and properties of persons to the extent such records and properties are

relevant to determining the compliance of such persons with the requirements of 49 U.S.C. 60101 *et seq.*, or regulations or orders issued thereunder.

(b) Inspections are ordinarily conducted pursuant to one of the following:

(1) Routine scheduling by the Regional Director of the Region in which the facility is located;

(2) A complaint received from a member of the public;

(3) Information obtained from a previous inspection;

(4) Report from a State Agency participating in the Federal Program under 49 U.S.C. 60105;

(5) Pipeline accident or incident; or

(6) Whenever deemed appropriate by the Associate Administrator.

(c) If the Associate Administrator or Regional Director believes that further information is needed to determine appropriate action, the Associate Administrator or Regional Director may notify the pipeline operator in writing that the operator is required to provide specific information within 30 days from the time the notification is received by the operator, unless otherwise specified in the notification. The notification must provide a reasonable description of the specific information required. An operator may request an extension of time to respond by providing a written justification as to why such an extension is necessary and proposing an alternative submission date. A request for an extension may ask for the deadline to be stayed while the extension is considered. General statements of hardship are not acceptable bases for requesting an extension.

(d) To the extent necessary to carry out the responsibilities under 49 U.S.C. 60101 *et seq.*, the Administrator, or the Associate Administrator, may require testing of portions of pipeline facilities that have been involved in, or affected by, an accident. However, before exercising this authority, the Administrator, or the Associate Administrator, shall make every effort to negotiate a mutually acceptable plan with the owner of those facilities and, where appropriate, the National Transportation Safety Board for performing the testing.

(e) If a representative of the U.S. Department of Transportation inspects or investigates an accident or incident involving a pipeline facility, the operator must make available to the representative all records and information that pertain to the event in any way, including integrity management plans and test results. The operator must provide all reasonable assistance in the investigation. Any person who obstructs an inspection or investigation by taking actions that were known or reasonably should have been known to prevent, hinder, or impede an investigation without good cause will be subject to administrative civil penalties under this subpart.

(f) When OPS determines that the information obtained from an inspection or from other appropriate sources warrants further action, OPS may initiate one or more of the enforcement proceedings prescribed in this subpart.

[45 FR 20413, Mar. 27, 1980, as amended by Amdt. 190–3, 56 FR 31090, July 9, 1991; Amdt. 190–6, 61 FR 18513, Apr. 26, 1996; Amdt. 190–7, 61 FR 27792, June 3, 1996; Amdt. 190–7, 63 FR 7722, Feb. 17, 1998; 70 FR 11137, Mar. 8, 2005; Amdt. 190–16, 78 FR 58909, Sept. 25, 2013]

§ 190.205 Warnings.

Upon determining that a probable violation of 49 U.S.C. 60101 *et seq.*, 33 U.S.C. 1321(j), or any regulation or order issued thereunder has occurred, the Associate Administrator or a Regional Director may issue a written warning notifying the operator of the probable violation and advising the operator to correct it or be subject to potential enforcement action in the future. The operator may submit a response to a warning, but is not required to. An adjudication under this subpart to determine whether a violation occurred is not conducted for warnings.

[Amdt. 190–16, 78 FR 58909, Sept. 25, 2013]

§ 190.206 Amendment of plans or procedures.

(a) A Regional Director begins a proceeding to determine whether an operator's plans or procedures required under parts 192, 193, 195, and 199 of this subchapter are inadequate to assure safe operation of a pipeline facility by

issuing a notice of amendment. The notice will specify the alleged inadequacies and the proposed revisions of the plans or procedures and provide an opportunity to respond. The notice will allow the operator 30 days following receipt of the notice to submit written comments, revised procedures, or a request for a hearing under § 190.211.

(b) After considering all material presented in writing or at the hearing, if applicable, the Associate Administrator determines whether the plans or procedures are inadequate as alleged. The Associate Administrator issues an order directing amendment of the plans or procedures if they are inadequate, or withdraws the notice if they are not. In determining the adequacy of an operator's plans or procedures, the Associate Administrator may consider:

(1) Relevant pipeline safety data;

(2) Whether the plans or procedures are appropriate for the particular type of pipeline transportation or facility, and for the location of the facility;

(3) The reasonableness of the plans or procedures; and

(4) The extent to which the plans or procedures contribute to public safety.

(c) An order directing amendment of an operator's plans or procedures prescribed in this section may be in addition to, or in conjunction with, other appropriate enforcement actions prescribed in this subpart.

[Amdt. 190–16, 78 FR 58910, Sept. 25, 2013]

§ 190.207 Notice of probable violation.

(a) Except as otherwise provided by this subpart, a Regional Director begins an enforcement proceeding by serving a notice of probable violation on a person charging that person with a probable violation of 49 U.S.C. 60101 *et seq.*, 33 U.S.C. 1321(j), or any regulation or order issued thereunder.

(b) A notice of probable violation issued under this section shall include:

(1) Statement of the provisions of the laws, regulations or orders which the respondent is alleged to have violated and a statement of the evidence upon which the allegations are based;

(2) Notice of response options available to the respondent under § 190.208;

(3) If a civil penalty is proposed under § 190.221, the amount of the proposed civil penalty and the maximum civil penalty for which respondent is liable under law; and

(4) If a compliance order is proposed under § 190.217, a statement of the remedial action being sought in the form of a proposed compliance order.

(c) The Regional Director may amend a notice of probable violation at any time prior to issuance of a final order under § 190.213. If an amendment includes any new material allegations of fact, proposes an increased civil penalty amount, or proposes new or additional remedial action under § 190.217, the respondent will have the opportunity to respond under § 190.208.

[45 FR 20413, Mar. 27, 1980, as amended by Amdt. 190–6, 61 FR 18513, Apr. 26, 1996; Amdt. 190–16, 78 FR 58910, Sept. 25, 2013]

§ 190.208 Response options.

Within 30 days of receipt of a notice of probable violation, the respondent must answer the Regional Director who issued the notice in the following manner:

(a) When the notice contains a proposed civil penalty—

(1) If the respondent is not contesting an allegation of probable violation, pay the proposed civil penalty as provided in § 190.227 and advise the Regional Director of the payment. The payment authorizes the Associate Administrator to make a finding of violation and to issue a final order under § 190.213;

(2) If the respondent is not contesting an allegation of probable violation but wishes to submit a written explanation, information, or other materials the respondent believes may warrant mitigation or elimination of the proposed civil penalty, the respondent may submit such materials. This authorizes the Associate Administrator to make a finding of violation and to issue a final order under § 190.213;

(3) If the respondent is contesting one or more allegations of probable violation but is not requesting a hearing under § 190.211, the respondent may submit a written response in answer to the allegations; or

(4) The respondent may request a hearing under § 190.211.

(b) When the notice contains a proposed compliance order—

(1) If the respondent is not contesting an allegation of probable violation,

agree to the proposed compliance order. This authorizes the Associate Administrator to make a finding of violation and to issue a final order under § 190.213;

(2) Request the execution of a consent order under § 190.219;

(3) If the respondent is contesting one or more of the allegations of probable violation or compliance terms, but is not requesting a hearing under § 190.211, the respondent may object to the proposed compliance order and submit written explanations, information, or other materials in answer to the allegations in the notice of probable violation; or

(4) The respondent may request a hearing under § 190.211.

(c) Before or after responding in accordance with paragraph (a) of this section or, when applicable paragraph (b) of this section, the respondent may request a copy of the violation report from the Regional Director as set forth in § 190.209. The Regional Director will provide the violation report to the respondent within five business days of receiving a request.

(d) Failure to respond in accordance with paragraph (a) of this section or, when applicable paragraph (b) of this section, constitutes a waiver of the right to contest the allegations in the notice of probable violation and authorizes the Associate Administrator, without further notice to the respondent, to find the facts as alleged in the notice of probable violation and to issue a final order under § 190.213.

(e) All materials submitted by operators in response to enforcement actions may be placed on publicly accessible Web sites. A respondent seeking confidential treatment under 5 U.S.C. 552(b) for any portion of its responsive materials must provide a second copy of such materials along with the complete original document. A respondent may redact the portions it believes qualify for confidential treatment in the second copy but must provide a written explanation for each redaction.

[Amdt. 190–16, 78 FR 58910, Sept. 25, 2013]

§ 190.209 Case file.

(a) The case file, as defined in this section, is available to the respondent in all enforcement proceedings conducted under this subpart.

(b) The case file of an enforcement proceeding consists of the following:

(1) In cases commenced under § 190.206, the notice of amendment and the relevant procedures;

(2) In cases commenced under § 190.207, the notice of probable violation and the violation report;

(3) In cases commenced under § 190.233, the corrective action order or notice of proposed corrective action order and the data report, if one is prepared;

(4) In cases commenced under § 190.239, the notice of proposed safety order;

(5) Any documents and other material submitted by the respondent in response to the enforcement action;

(6) In cases involving a hearing, any material submitted during and after the hearing as set forth in § 190.211; and

(7) The Regional Director's written evaluation of response material submitted by the respondent and recommendation for final action, if one is prepared.

[Amdt. 190–16, 78 FR 58910, Sept. 25, 2013]

§ 190.210 Separation of functions.

(a) *General*. An agency employee who assists in the investigation or prosecution of an enforcement case may not participate in the decision of that case or a factually related one, but may participate as a witness or counsel at a hearing as set forth in this subpart. Likewise, an agency employee who prepares a decision in an enforcement case may not have served in an investigative or prosecutorial capacity in that case or a factually related one.

(b) *Prohibition on* ex parte *communications*. A party to an enforcement proceeding, including the respondent, its representative, or an agency employee having served in an investigative or prosecutorial capacity in the proceeding, may not communicate privately with the Associate Administrator, Presiding Official, or attorney drafting the recommended decision concerning information that is relevant to the questions to be decided in the proceeding. A party may communicate with the Presiding Official regarding administrative or procedural

issues, such as for scheduling a hearing.

[Amdt. 190–16, 78 FR 58911, Sept. 25, 2013]

§ 190.211 Hearing.

(a) *General.* This section applies to hearings conducted under this part relating to civil penalty assessments, compliance orders, orders directing amendment, safety orders, and corrective action orders. The Presiding Official will convene hearings conducted under this section.

(b) *Hearing request and statement of issues.* A request for a hearing must be accompanied by a statement of the issues that the respondent intends to raise at the hearing. The issues may relate to the allegations in the notice, the proposed corrective action, or the proposed civil penalty amount. A respondent's failure to specify an issue may result in waiver of the respondent's right to raise that issue at the hearing. The respondent's request must also indicate whether or not the respondent will be represented by counsel at the hearing. The respondent may withdraw a request for a hearing in writing and provide a written response.

(c) *Telephonic and in-person hearings.* A telephone hearing will be held if the amount of the proposed civil penalty or the cost of the proposed corrective action is less than $25,000, unless the respondent or OPS submits a written request for an in-person hearing. In-person hearings will normally be held at the office of the appropriate OPS Region. Hearings may be held by video teleconference if the necessary equipment is available to all parties.

(d) *Pre-hearing submissions.* If OPS or the respondent intends to introduce material, including records, documents, and other exhibits not already in the case file, the material must be submitted to the Presiding Official and the other party at least 10 days prior to the date of the hearing, unless the Presiding Official sets a different deadline or waives the deadline for good cause.

(e) *Conduct of the hearing.* The hearing is conducted informally without strict adherence to rules of evidence. The Presiding Official regulates the course of the hearing and gives each party an opportunity to offer facts, statements, explanations, documents, testimony or other evidence that is relevant and material to the issues under consideration. The parties may call witnesses on their own behalf and examine the evidence and witnesses presented by the other party. After the evidence in the case has been presented, the Presiding Official will permit reasonable discussion of the issues under consideration.

(f) *Written transcripts.* If a respondent elects to transcribe a hearing, the respondent must make arrangements with a court reporter at cost to the respondent and submit a complete copy of the transcript for the case file. The respondent must notify the Presiding Official in advance if it intends to transcribe a hearing.

(g) *Post-hearing submission.* The respondent and OPS may request an opportunity to submit further written material after the hearing for inclusion in the record. The Presiding Official will allow a reasonable time for the submission of the material and will specify the submission date. If the material is not submitted within the time prescribed, the case will proceed to final action without the material.

(h) *Preparation of decision.* After consideration of the case file, the Presiding Official prepares a recommended decision in the case, which is then forwarded to the Associate Administrator for issuance of a final order.

[Amdt. 190–16, 78 FR 58911, Sept. 25, 2013]

§ 190.212 Presiding official, powers, and duties.

(a) *General.* The Presiding Official for a hearing conducted under § 190.211 is an attorney on the staff of the Deputy Chief Counsel who is not engaged in any investigative or prosecutorial functions, such as the issuance of notices under this subpart. If the designated Presiding Official is unavailable, the Deputy Chief Counsel may delegate the powers and duties specified in this section to another attorney in the Office of Chief Counsel who is not engaged in any investigative or prosecutorial functions under this subpart.

(b) *Time and place of the hearing.* The Presiding Official will set the date, time and location of the hearing. To the extent practicable, the Presiding

Official will accommodate the parties' schedules when setting the hearing. Reasonable notice of the hearing will be provided to all parties.

(c) *Powers and duties of Presiding Official*. The Presiding Official will conduct a fair and impartial hearing and take all action necessary to avoid delay in the disposition of the proceeding and maintain order. The Presiding Official has all powers necessary to achieve those ends, including, but not limited to the power to:

(1) Regulate the course of the hearing and conduct of the parties and their counsel;

(2) Receive evidence and inquire into the relevant and material facts;

(3) Require the submission of documents and other information;

(4) Direct that documents or briefs relate to issues raised during the course of the hearing;

(5) Set the date for filing documents, briefs, and other items;

(6) Prepare a recommended decision; and

(7) Exercise the authority necessary to carry out the responsibilities of the Presiding Official under this subpart.

[Amdt. 190–16, 78 FR 58911, Sept. 25, 2013]

§ 190.213 Final order.

(a) In an enforcement proceeding commenced under § 190.207, an attorney from the Office of Chief Counsel prepares a recommended decision after expiration of the 30-day response period prescribed in § 190.208. If a hearing is held, the Presiding Official prepares the recommended decision as set forth in § 190.211. The recommended decision is forwarded to the Associate Administrator who considers the case file and issues a final order. The final order includes—

(1) A statement of findings and determinations on all material issues, including a determination as to whether each alleged violation has been proved;

(2) If a civil penalty is assessed, the amount of the penalty and the procedures for payment of the penalty, provided that the assessed civil penalty may not exceed the penalty proposed in the notice of probable violation; and

(3) If a compliance order is issued, a statement of the actions required to be taken by the respondent and the time by which such actions must be accomplished.

(b) In cases where a substantial delay is expected in the issuance of a final order, notice of that fact and the date by which it is expected that action will be taken is provided to the respondent upon request and whenever practicable.

[Amdt. 190–16, 78 FR 58911, Sept. 25, 2013]

§ 190.215 [Reserved]

COMPLIANCE ORDERS

§ 190.217 Compliance orders generally.

When a Regional Director has reason to believe that a person is engaging in conduct that violates 49 U.S.C. 60101 *et seq.*, 33 U.S.C. 1321(j), or any regulation or order issued thereunder, and if the nature of the violation and the public interest so warrant, the Regional Director may initiate proceedings under §§ 190.207 through 190.213 to determine the nature and extent of the violations and for the issuance of an order directing compliance.

[Amdt. 190–16, 78 FR 58912, Sept. 25, 2013]

§ 190.219 Consent order.

(a) At any time prior to the issuance of a compliance order under § 190.217, a corrective action order under § 190.233, or a safety order under § 190.239, the Regional Director and the respondent may agree to resolve the case by execution of a consent agreement and order, which may be jointly executed by the parties and issued by the Associate Administrator. Upon execution, the consent order is considered a final order under § 190.213.

(b) A consent order executed under paragraph (a) of this section shall include:

(1) An admission by the respondent of all jurisdictional facts;

(2) An express waiver of further procedural steps and of all right to seek judicial review or otherwise challenge or contest the validity of that order;

(3) An acknowledgement that the notice of probable violation may be used to construe the terms of the consent order; and

(4) A statement of the actions required of the respondent and the time by which such actions shall be accomplished.

(c) Prior to the execution of a consent agreement and order arising out of a corrective action order under § 190.233, the Associate Administrator will notify any appropriate State official in accordance with 49 U.S.C. 60112(c).

[45 FR 20413, Mar. 27, 1980, as amended by Amdt. 190–6, 61 FR 18514, Apr. 26, 1996; Amdt. 190–16, 78 FR 58912, Sept. 25, 2013]

CIVIL PENALTIES

§ 190.221 Civil penalties generally.

When a Regional Director has reason to believe that a person has committed an act violating 49 U.S.C. 60101 *et seq.*, 33 U.S.C. 1321(j), or any regulation or order issued thereunder, the Regional Director may initiate proceedings under §§ 190.207 through 190.213 to determine the nature and extent of the violations and appropriate civil penalty.

[Amdt. 190–16, 78 FR 58912, Sept. 25, 2013]

§ 190.223 Maximum penalties.

(a) Any person who is determined to have violated a provision of 49 U.S.C. 60101 *et seq.*, or any regulation or order issued thereunder is subject to an administrative civil penalty not to exceed $200,000 for each violation for each day the violation continues, except that the maximum administrative civil penalty may not exceed $2,000,000 for any related series of violations.

(b) Any person who is determined to have violated a provision of 33 U.S.C. 1321(j) or any regulation or order issued thereunder is subject to an administrative civil penalty under 33 U.S.C. 1321(b)(6), as adjusted by 40 CFR 19.4.

(c) Any person who is determined to have violated any standard or order under 49 U.S.C. 60103 is subject to an administrative civil penalty not to exceed $50,000, which may be in addition to other penalties to which such person may be subject under paragraph (a) of this section.

(d) Any person who is determined to have violated any standard or order under 49 U.S.C. 60129 is subject to an administrative civil penalty not to exceed $1,000, which may be in addition to other penalties to which such person may be subject under paragraph (a) of this section.

(e) Separate penalties for violating a regulation prescribed under this subchapter and for violating an order issued under §§ 190.206, 190.213, 190.233, or 190.239 may not be imposed under this section if both violations are based on the same act.

[Amdt. 190–16, 78 FR 58912, Sept. 25, 2013]

§ 190.225 Assessment considerations.

In determining the amount of a civil penalty under this part,

(a) The Associate Administrator will consider:

(1) The nature, circumstances and gravity of the violation, including adverse impact on the environment;

(2) The degree of the respondent's culpability;

(3) The respondent's history of prior offenses;

(4) Any good faith by the respondent in attempting to achieve compliance;

(5) The effect on the respondent's ability to continue in business; and

(b) The Associate Administrator may consider:

(1) The economic benefit gained from violation, if readily ascertainable, without any reduction because of subsequent damages; and

(2) Such other matters as justice may require.

[Amdt. 190–16, 78 FR 58912, Sept. 25, 2013]

§ 190.227 Payment of penalty.

(a) Except for payments exceeding $10,000, payment of a civil penalty proposed or assessed under this subpart may be made by certified check or money order (containing the CPF Number for the case), payable to ''U.S. Department of Transportation,'' to the Federal Aviation Administration, Mike Monroney Aeronautical Center, Financial Operations Division (AMZ–341), P.O. Box 25770, Oklahoma City, OK 73125, or by wire transfer through the Federal Reserve Communications System (Fedwire) to the account of the U.S. Treasury, or via *https://www.pay.gov*. Payments exceeding $10,000 must be made by wire transfer.

(b) Payment of a civil penalty assessed in a final order issued under § 190.213 or affirmed in a decision on a petition for reconsideration must be made within 20 days after receipt of the

final order or decision. Failure to do so will result in the initiation of collection action, including the accrual of interest and penalties, in accordance with 31 U.S.C. 3717 and 49 CFR part 89.

[Amdt. 190–7, 61 FR 27792, June 3, 1996, as amended at 70 FR 11138, Mar. 8, 2005; 73 FR 16567, Mar. 28, 2008; Amdt. 190–16, 78 FR 58912, Sept. 25, 2013]

§ 190.229 [Reserved]

§ 190.231 [Reserved]

SPECIFIC RELIEF

§ 190.233 Corrective action orders.

(a) *Generally*. Except as provided by paragraph (b) of this section, if the Associate Administrator finds, after reasonable notice and opportunity for hearing in accord with paragraph (c) of this section, a particular pipeline facility is or would be hazardous to life, property, or the environment, the Associate Administrator may issue an order pursuant to this section requiring the operator of the facility to take corrective action. Corrective action may include suspended or restricted use of the facility, physical inspection, testing, repair, replacement, or other appropriate action.

(b) *Waiver of notice and expedited review*. The Associate Administrator may waive the requirement for notice and opportunity for hearing under paragraph (a) of this section before issuing an order whenever the Associate Administrator determines that the failure to do so would result in the likelihood of serious harm to life, property, or the environment. When an order is issued under this paragraph, a respondent that contests the order may obtain expedited review of the order either by answering in writing to the order within 10 days of receipt or requesting a hearing under § 190.211 to be held as soon as practicable in accordance with paragraph (c)(2) of this section. For purposes of this section, the term ''expedited review'' is defined as the process for making a prompt determination of whether the order should remain in effect or be amended or terminated. The expedited review of an order issued under this paragraph will be complete upon issuance of such determination.

(c) *Notice and hearing:*

(1) Written notice that OPS intends to issue an order under this section will be served upon the owner or operator of an alleged hazardous facility in accordance with § 190.5. The notice must allege the existence of a hazardous facility and state the facts and circumstances supporting the issuance of a corrective action order. The notice must provide the owner or operator with an opportunity to respond within 10 days of receipt.

(2) An owner or operator that elects to exercise its opportunity for a hearing under this section must notify the Associate Administrator of that election in writing within 10 days of receipt of the notice provided under paragraph (c)(1) of this section, or the order under paragraph (b) of this section when applicable. The absence of such written notification waives an owner or operator's opportunity for a hearing.

(3) At any time after issuance of a notice or order under this section, the respondent may request a copy of the case file as set forth in § 190.209.

(4) A hearing under this section is conducted pursuant to § 190.211. The hearing should be held within 15 days of receipt of the respondent's request for a hearing.

(5) After conclusion of a hearing under this section, the Presiding Official submits a recommended decision to the Associate Administrator as to whether or not the facility is or would be hazardous to life, property, or the environment, and if necessary, requiring expeditious corrective action. If a notice or order is contested in writing without a hearing, an attorney from the Office of Chief Counsel prepares the recommended decision. The recommended decision should be submitted to the Associate Administrator within five business days after conclusion of the hearing or after receipt of the respondent's written objection if no hearing is held. Upon receipt of the recommendation, the Associate Administrator will proceed in accordance with paragraphs (d) through (h) of this section. If the Associate Administrator finds the facility is or would be hazardous to life, property, or the environment, the Associate Administrator issues a corrective action order in accordance with this section, or confirms

(or amends) the corrective action order issued under paragraph (b) of this section. If the Associate Administrator does not find the facility is or would be hazardous to life, property, or the environment, the Associate Administrator withdraws the notice or terminates the order issued under paragraph (b) of this section, and promptly notifies the operator in writing by service as prescribed in § 190.5.

(d) The Associate Administrator may find a pipeline facility to be hazardous under paragraph (a) of this section:

(1) If under the facts and circumstances the Associate Administrator determines the particular facility is hazardous to life, property, or the environment; or

(2) If the pipeline facility or a component thereof has been constructed or operated with any equipment, material, or technique which the Associate Administrator determines is hazardous to life, property, or the environment, unless the operator involved demonstrates to the satisfaction of the Associate Administrator that, under the particular facts and circumstances involved, such equipment, material, or technique is not hazardous.

(e) In making a determination under paragraph (d) of this section, the Associate Administrator shall consider, if relevant:

(1) The characteristics of the pipe and other equipment used in the pipeline facility involved, including its age, manufacturer, physical properties (including its resistance to corrosion and deterioration), and the method of its manufacture, construction or assembly;

(2) The nature of the materials transported by such facility (including their corrosive and deteriorative qualities), the sequence in which such materials are transported, and the pressure required for such transportation;

(3) The characteristics of the geographical areas in which the pipeline facility is located, in particular the climatic and geologic conditions (including soil characteristics) associated with such areas, and the population density and population and growth patterns of such areas;

(4) Any recommendation of the National Transportation Safety Board issued in connection with any investigation conducted by the Board; and

(5) Such other factors as the Associate Administrator may consider appropriate.

(f) A corrective action order shall contain the following information:

(1) A finding that the pipeline facility is or would be hazardous to life, property, or the environment.

(2) The relevant facts which form the basis of that finding.

(3) The legal basis for the order.

(4) The nature and description of any particular corrective action required of the respondent.

(5) The date by which the required corrective action must be taken or completed and, where appropriate, the duration of the order.

(6) If the opportunity for a hearing was waived pursuant to paragraph (b) of this section, a statement that an opportunity for a hearing will be available at a particular time and location after issuance of the order.

(g) The Associate Administrator will terminate a corrective action order whenever the Associate Administrator determines that the facility is no longer hazardous to life, property, or the environment. If appropriate, however, a notice of probable violation may be issued under § 190.207.

(h) At any time after a corrective action order issued under this section has become effective, the Associate Administrator may request the Attorney General to bring an action for appropriate relief in accordance with § 190.235.

(i) Upon petition by the Attorney General, the District Courts of the United States shall have jurisdiction to enforce orders issued under this section by appropriate means.

[70 FR 11138, Mar. 8, 2005, as amended by Amdt. 190–16, 78 FR 58912, Sept. 25, 2013]

§ 190.235 Civil actions generally.

Whenever it appears to the Associate Administrator that a person has engaged, is engaged, or is about to engage in any act or practice constituting a violation of any provision of 49 U.S.C. 60101 *et seq.*, or any regulations issued thereunder, the Administrator, or the person to whom the authority has been delegated, may request the Attorney

General to bring an action in the appropriate U.S. District Court for such relief as is necessary or appropriate, including mandatory or prohibitive injunctive relief, interim equitable relief, civil penalties, and punitive damages as provided under 49 U.S.C. 60120 and 49 U.S.C. 5123.

[70 FR 11139, Mar. 8, 2005]

§ 190.237 [Reserved]

§ 190.239 Safety orders.

(a) *When may PHMSA issue a safety order?* If the Associate Administrator finds, after notice and an opportunity for hearing under paragraph (b) of this section, that a particular pipeline facility has a condition or conditions that pose a pipeline integrity risk to public safety, property, or the environment, the Associate Administrator may issue an order requiring the operator of the facility to take necessary corrective action. Such action may include physical inspection, testing, repair or other appropriate action to remedy the identified risk condition.

(b) *How is an operator notified of the proposed issuance of a safety order and what are its responses options?* (1) *Notice of proposed safety order*. PHMSA will serve written notice of a proposed safety order under § 190.5 to an operator of the pipeline facility. The notice will allege the existence of a condition that poses a pipeline integrity risk to public safety, property, or the environment, and state the facts and circumstances that support issuing a safety order for the specified pipeline or portion thereof. The notice will also specify proposed testing, evaluations, integrity assessment, or other actions to be taken by the operator and may propose that the operator submit a work plan and schedule to address the conditions identified in the notice. The notice will also provide the operator with its response options, including procedures for requesting informal consultation and a hearing. An operator receiving a notice will have 30 days to respond to the PHMSA official who issued the notice.

(2) *Informal consultation*. Upon timely request by the operator, PHMSA will provide an opportunity for informal consultation concerning the proposed safety order. Such informal consultation shall commence within 30 days, provided that PHMSA may extend this time by request or otherwise for good cause. Informal consultation provides an opportunity for the respondent to explain the circumstances associated with the risk condition(s) identified in the notice and, where appropriate, to present a proposal for corrective action, without prejudice to the operator's position in any subsequent hearing. If the respondent and Regional Director agree within 30 days of the informal consultation on a plan for the operator to address each risk condition, they may enter into a written consent agreement and the Associate Administrator may issue a consent order incorporating the terms of the agreement. If a consent agreement is reached, no further hearing will be provided in the matter and any pending hearing request will be considered withdrawn. If a consent agreement is not reached within 30 days of the informal consultation (or if informal consultation is not requested), the Associate Administrator may proceed under paragraphs (b)(3) through (5) of this section. If PHMSA subsequently determines that an operator has failed to comply with the terms of a consent order, PHMSA may obtain any administrative or judicial remedies available under 49 U.S.C. 60101 *et seq*. and this part. If a consent agreement is not reached, any admissions made by the operator during the informal consultation shall be excluded from the record in any subsequent hearing. Nothing in this paragraph (b) precludes PHMSA from terminating the informal consultation process if it has reason to believe that the operator is not engaging in good faith discussions or otherwise concludes that further consultation would not be productive or in the public interest.

(3) *Hearing*. An operator receiving a notice of proposed safety order may contest the notice, or any portion thereof, by filing a written request for a hearing within 30 days following receipt of the notice or within 10 days following the conclusion of informal consultation that did not result in a consent agreement, as applicable. In the absence of a timely request for a hearing, the Associate Administrator

may issue a safety order in the form of the proposed order in accordance with paragraphs (c) through (g) of this section.

(4) *Conduct of hearing.* An attorney from the Office of Chief Counsel, will serve as the Presiding Official in a hearing under this section. The hearing will be conducted informally, without strict adherence to formal rules of evidence in accordance with § 190.211. The respondent may submit any relevant information or materials, call witnesses, and present arguments on the issue of whether a safety order should be issued to address the alleged presence of a condition that poses a pipeline integrity risk to public safety, property, or the environment.

(5) *Post-hearing action.* Following a hearing under this section, the Presiding Official will submit a recommendation to the Associate Administrator concerning issuance of a final safety order. Upon receipt of the recommendation, the Associate Administrator may proceed under paragraphs (c) through (g) of this section. If the Associate Administrator finds the facility to have a condition that poses a pipeline integrity risk to public safety, property, or the environment, the Associate Administrator will issue a safety order under this section. If the Associate Administrator does not find that the facility has such a condition, or concludes that a safety order is otherwise not warranted, the Associate Administrator will withdraw the notice and promptly notify the operator in writing by service as prescribed in § 190.5. Nothing in this subsection precludes PHMSA and the operator from entering into a consent agreement at any time before a safety order is issued.

(6) *Termination of safety order.* Once all remedial actions set forth in the safety order and associated work plans are completed, as determined by PHMSA, the Associate Administrator will notify the operator that the safety order has been lifted. The Associate Administrator shall suspend or terminate a safety order whenever the Associate Administrator determines that the pipeline facility no longer has a condition or conditions that pose a pipeline integrity risk to public safety, property, or the environment.

(c) *How is the determination made that a pipeline facility has a condition that poses an integrity risk?* The Associate Administrator may find a pipeline facility to have a condition that poses a pipeline integrity risk to public safety, property, or the environment under paragraph (a) of this section:

(1) If under the facts and circumstances the Associate Administrator determines the particular facility has such a condition; or

(2) If the pipeline facility or a component thereof has been constructed or operated with any equipment, material, or technique with a history of being susceptible to failure when used in pipeline service, unless the operator involved demonstrates that such equipment, material, or technique is not susceptible to failure given the manner it is being used for a particular facility.

(d) *What factors must PHMSA consider in making a determination that a risk condition is present?* In making a determination under paragraph (c) of this section, the Associate Administrator shall consider, if relevant:

(1) The characteristics of the pipe and other equipment used in the pipeline facility involved, including its age, manufacturer, physical properties (including its resistance to corrosion and deterioration), and the method of its manufacture, construction or assembly;

(2) The nature of the materials transported by such facility (including their corrosive and deteriorative qualities), the sequence in which such materials are transported, and the pressure required for such transportation;

(3) The characteristics of the geographical areas where the pipeline facility is located, in particular the climatic and geologic conditions (including soil characteristics) associated with such areas;

(4) For hazardous liquid pipelines, the proximity of the pipeline to an unusually sensitive area;

(5) The population density and growth patterns of the area in which the pipeline facility is located;

(6) Any relevant recommendation of the National Transportation Safety

Board issued in connection with any investigation conducted by the Board;

(7) The likelihood that the condition will impair the serviceability of the pipeline;

(8) The likelihood that the condition will worsen over time; and

(9) The likelihood that the condition is present or could develop on other areas of the pipeline.

(e) *What information will be included in a safety order?* A safety order shall contain the following:

(1) A finding that the pipeline facility has a condition that poses a pipeline integrity risk to public safety, property, or the environment;

(2) The relevant facts which form the basis of that finding;

(3) The legal basis for the order;

(4) The nature and description of any particular corrective actions to be required of the operator; and

(5) The date(s) by which the required corrective actions must be taken or completed and, where appropriate, the duration of the order.

(f) *Can PHMSA take other enforcement actions on the affected facilities?* Nothing in this section precludes PHMSA from issuing a Notice of Probable Violation under § 190.207 or taking other enforcement action if noncompliance is identified at the facilities that are the subject of a safety order proceeding.

(g) *May I petition for reconsideration of a safety order?* Yes, a petition for reconsideration may be submitted in accordance with § 190.243.

[73 FR 16567, Mar. 28, 2008, as amended at 74 FR 2893, Jan. 16, 2009; Amdt. 190–16, 78 FR 58913, Sept. 25, 2013]

§ 190.241 Finality.

Except as otherwise provided by § 190.243, an order directing amendment issued under § 190.206, a final order issued under § 190.213, a corrective action order issued under § 190.233, or a safety order issued under § 190.239 is considered final administrative action on that enforcement proceeding.

[Amdt. 190–16, 78 FR 58913, Sept. 25, 2013]

§ 190.243 Petitions for reconsideration.

(a) A respondent may petition the Associate Administrator for reconsideration of an order directing amendment of plans or procedures issued under § 190.206, a final order issued under § 190.213, or a safety order issued under § 190.239. The written petition must be received no later than 20 days after receipt of the order by the respondent. A copy of the petition must be provided to the Chief Counsel of the Pipeline and Hazardous Materials Safety Administration, East Building, 2nd Floor, Mail Stop E26–105, 1200 New Jersey Ave. SE., Washington, DC 20590 or by email to *phmsachiefcounsel@dot.gov*. Petitions received after that time will not be considered. The petition must contain a brief statement of the complaint and an explanation as to why the order should be reconsidered.

(b) If the respondent requests the consideration of additional facts or arguments, the respondent must submit the reasons why they were not presented prior to issuance of the final order.

(c) The filing of a petition under this section stays the payment of any civil penalty assessed. However, unless the Associate Administrator otherwise provides, the order, including any required corrective action, is not stayed.

(d) The Associate Administrator may grant or deny, in whole or in part, any petition for reconsideration without further proceedings. If the Associate Administrator reconsiders an order under this section, a final decision on reconsideration may be issued without further proceedings, or, in the alternative, additional information, data, and comment may be requested by the Associate Administrator, as deemed appropriate.

(e) It is the policy of the Associate Administrator to expeditiously issue notice of the action taken on a petition for reconsideration. In cases where a substantial delay is expected, notice of that fact and the date by which it is expected that action will be taken is provided to the respondent upon request and whenever practicable.

(f) If the Associate Administrator reconsiders an order under this section, the decision on reconsideration is the final administrative action on that enforcement proceeding.

(g) Any application for judicial review must be filed no later than 89 days

after the issuance of the decision in accordance with 49 U.S.C. 60119(a).

(h) Judicial review of agency action under 49 U.S.C. 60119(a) will apply the standards of review established in 5 U.S.C. 706.

[Amdt. 190–16, 78 FR 58913, Sept. 25, 2013]

Subpart C—Criminal Enforcement

SOURCE: Amdt. 190–16, 78 FR 58914, Sept. 25, 2013, unless otherwise noted.

§ 190.291 Criminal penalties generally.

(a) Any person who willfully and knowingly violates a provision of 49 U.S.C. 60101 *et seq.* or any regulation or order issued thereunder will upon conviction be subject to a fine under title 18, United States Code, and imprisonment for not more than five years, or both, for each offense.

(b) Any person who willfully and knowingly injures or destroys, or attempts to injure or destroy, any interstate transmission facility, any interstate pipeline facility, or any intrastate pipeline facility used in interstate or foreign commerce or in any activity affecting interstate or foreign commerce (as those terms are defined in 49 U.S.C. 60101 *et seq.*) will, upon conviction, be subject to a fine under title 18, United States Code, imprisonment for a term not to exceed 20 years, or both, for each offense.

(c) Any person who willfully and knowingly defaces, damages, removes, or destroys any pipeline sign, right-of-way marker, or marine buoy required by 49 U.S.C. 60101 *et seq.* or any regulation or order issued thereunder will, upon conviction, be subject to a fine under title 18, United States Code, imprisonment for a term not to exceed 1 year, or both, for each offense.

(d) Any person who willfully and knowingly engages in excavation activity without first using an available one-call notification system to establish the location of underground facilities in the excavation area; or without considering location information or markings established by a pipeline facility operator; and

(1) Subsequently damages a pipeline facility resulting in death, serious bodily harm, or property damage exceeding $50,000;

(2) Subsequently damages a pipeline facility and knows or has reason to know of the damage but fails to promptly report the damage to the operator and to the appropriate authorities; or

(3) Subsequently damages a hazardous liquid pipeline facility that results in the release of more than 50 barrels of product; will, upon conviction, be subject to a fine under title 18, United States Code, imprisonment for a term not to exceed 5 years, or both, for each offense.

(e) No person shall be subject to criminal penalties under paragraph (a) of this section for violation of any regulation and the violation of any order issued under §§ 190.217, 190.219 or 190.291 if both violations are based on the same act.

§ 190.293 Referral for prosecution.

If a PHMSA employee becomes aware of any actual or possible activity subject to criminal penalties under § 190.291, the employee reports it to the Office of Chief Counsel, Pipeline and Hazardous Materials Safety Administration, and to his or her supervisor. The Chief Counsel may refer the report to OPS for investigation. If appropriate, the Chief Counsel refers the report to the Department of Justice for criminal prosecution of the offender.

Subpart D—Procedures for Adoption of Rules

SOURCE: Amdt. 190–8, 61 FR 50909, Sept. 27, 1996, unless otherwise noted.

§ 190.301 Scope.

This subpart prescribes general rulemaking procedures for the issue, amendment, and repeal of Pipeline Safety Program regulations of the Pipeline and Hazardous Materials Safety Administration of the Department of Transportation.

[Amdt. 190–8, 61 FR 50909, Sept. 27, 1996, as amended at 70 FR 11137, Mar. 8, 2005]

§ 190.303 Delegations.

For the purposes of this subpart, *Administrator* means the Administrator,

Pipeline and Hazardous Materials Safety Administration, or his or her delegate.

[Amdt. 190–8, 61 FR 50909, Sept. 27, 1996, as amended at 70 FR 11137, Mar. 8, 2005]

§ 190.305 Regulatory dockets.

(a) Information and data considered relevant by the Administrator relating to rulemaking actions, including notices of proposed rulemaking; comments received in response to notices; petitions for rulemaking and reconsideration; denials of petitions for rulemaking and reconsideration; records of additional rulemaking proceedings under § 190.325; and final regulations are maintained by the Pipeline and Hazardous Materials Safety Administration at 1200 New Jersey Avenue, SE, Washington, D.C. 20590–0001.

(b) Once a public docket is established, docketed material may be accessed at *http://www.regulations.gov*. Public comments also may be submitted at *http://www.regulations.gov*. Comment submissions must identify the docket number. You may also examine public docket material at the offices of the Docket Operations Facility (M–30), U.S. Department of Transportation, West Building, First Floor, Room W12–140, 1200 New Jersey Avenue, SE., Washington, DC 20590. You may obtain a copy during normal business hours, excluding Federal holidays, for a fee, with the exception of material which the Administrator of PHMSA determines should be withheld from public disclosure under 5 U.S.C. 552(b) or any other applicable statutory provision.

[Amdt. 190–8, 61 FR 50909, Sept. 27, 1996, as amended at 70 FR 11137 and 11139, Mar. 8, 2005; 73 FR 16566, Mar. 28, 2008; 73 FR 16568, Mar. 28, 2008]

§ 190.307 Records.

Records of the Pipeline and Hazardous Materials Safety Administration relating to rulemaking proceedings are available for inspection as provided in section 552(b) of title 5, United States Code, and part 7 of the Regulations of the Office of the Secretary of Transportation (part 7 of this title).

[Amdt. 190–8, 61 FR 50909, Sept. 27, 1996, as amended at 70 FR 11137, Mar. 8, 2005]

§ 190.309 Where to file petitions.

Petitions for extension of time to comment submitted under § 190.319, petitions for hearings submitted under § 190.327, petitions for rulemaking submitted under § 190.331, and petitions for reconsideration submitted under § 190.335 must be submitted to: Administrator, Pipeline and Hazardous Materials Safety Administration, U.S. Department of Transportation, 1200 New Jersey Avenue, SE, Washington, D.C. 20590–0001.

[Amdt. 190–8, 61 FR 50909, Sept. 27, 1996, as amended at 70 FR 11137, Mar. 8, 2005; 73 FR 16566, Mar. 28, 2008]

§ 190.311 General.

Unless the Administrator, for good cause, finds that notice is impracticable, unnecessary, or contrary to the public interest, and incorporates that finding and a brief statement of the reasons for it in the rule, a notice of proposed rulemaking is issued and interested persons are invited to participate in the rulemaking proceedings with respect to each substantive rule.

§ 190.313 Initiation of rulemaking.

The Administrator initiates rulemaking on his or her own motion; however, in so doing, the Administrator may use discretion to consider the recommendations of other agencies of the United States or of other interested persons including those of any technical advisory body established by statute for that purpose.

§ 190.315 Contents of notices of proposed rulemaking.

(a) Each notice of proposed rulemaking is published in the FEDERAL REGISTER, unless all persons subject to it are named and are personally served with a copy of it.

(b) Each notice, whether published in the FEDERAL REGISTER or personally served, includes:

(1) A statement of the time, place, and nature of the proposed rulemaking proceeding;

(2) A reference to the authority under which it is issued;

(3) A description of the subjects and issues involved or the substance and terms of the proposed regulation;

(4) A statement of the time within which written comments must be submitted; and

(5) A statement of how and to what extent interested persons may participate in the proceeding.

§ 190.317 Participation by interested persons.

(a) Any interested person may participate in rulemaking proceedings by submitting comments in writing containing information, views or arguments in accordance with instructions for participation in the rulemaking document.

(b) The Administrator may invite any interested person to participate in the rulemaking proceedings described in § 190.325.

(c) For the purposes of this subpart, an interested person includes any Federal or State government agency or any political subdivision of a State.

§ 190.319 Petitions for extension of time to comment.

A petition for extension of the time to submit comments must be submitted to PHMSA in accordance with § 190.309 and received by PHMSA not later than 10 days before expiration of the time stated in the notice. The filing of the petition does not automatically extend the time for petitioner's comments. A petition is granted only if the petitioner shows good cause for the extension, and if the extension is consistent with the public interest. If an extension is granted, it is granted to all persons, and it is published in the FEDERAL REGISTER.

[Amdt. 190–16, 78 FR 58914, Sept. 25, 2013]

§ 190.321 Contents of written comments.

All written comments must be in English. Any interested person should submit as part of written comments all material considered relevant to any statement of fact. Incorporation of material by reference should be avoided; however, where necessary, such incorporated material must be identified by document title and page.

[Amdt. 190–16, 78 FR 58914, Sept. 25, 2013]

§ 190.323 Consideration of comments received.

All timely comments and the recommendations of any technical advisory body established by statute for the purpose of reviewing the proposed rule concerned are considered before final action is taken on a rulemaking proposal. Late filed comments are considered so far as practicable.

§ 190.325 Additional rulemaking proceedings.

The Administrator may initiate any further rulemaking proceedings that the Administrator finds necessary or desirable. For example, interested persons may be invited to make oral arguments, to participate in conferences between the Administrator or the Administrator's representative and interested persons, at which minutes of the conference are kept, to appear at informal hearings presided over by officials designated by the Administrator at which a transcript of minutes are kept, or participate in any other proceeding to assure informed administrative action and to protect the public interest.

§ 190.327 Hearings.

(a) If a notice of proposed rulemaking does not provide for a hearing, any interested person may petition the Administrator for an informal hearing. The petition must be received by the Administrator not later than 20 days before expiration of the time stated in the notice. The filing of the petition does not automatically result in the scheduling of a hearing. A petition is granted only if the petitioner shows good cause for a hearing. If a petition for a hearing is granted, notice of the hearing is published in the FEDERAL REGISTER.

(b) Sections 556 and 557 of title 5, United States Code, do not apply to hearings held under this subpart. Unless otherwise specified, hearings held under this subpart are informal, nonadversarial fact-finding proceedings, at which there are no formal pleadings or adverse parties. Any regulation issued in a case in which an informal hearing

is held is not necessarily based exclusively on the record of the hearing.

(c) The Administrator designates a representative to conduct any hearing held under this subpart. The Chief Counsel designates a member of his or her staff to serve as legal officer at the hearing.

[Amdt. 190–8, 61 FR 50909, Sept. 27, 1996. Redesignated and amended by Amdt. 190–16, 78 FR 58914, Sept. 25, 2013]

§ 190.329 Adoption of final rules.

Final rules are prepared by representatives of the Office of Pipeline Safety and the Office of the Chief Counsel. The regulation is then submitted to the Administrator for consideration. If the Administrator adopts the regulation, it is published in the FEDERAL REGISTER, unless all persons subject to it are named and are personally served with a copy of it.

§ 190.331 Petitions for rulemaking.

(a) Any interested person may petition the Associate Administrator for Pipeline Safety to establish, amend, or repeal a substantive regulation, or may petition the Chief Counsel to establish, amend, or repeal a procedural regulation.

(b) Each petition filed under this section must—

(1) Summarize the proposed action and explain its purpose;

(2) State the text of the proposed rule or amendment, or specify the rule proposed to be repealed;

(3) Explain the petitioner's interest in the proposed action and the interest of any party the petitioner represents; and

(4) Provide information and arguments that support the proposed action, including relevant technical, scientific or other data as available to the petitioner, and any specific known cases that illustrate the need for the proposed action.

(c) If the potential impact of the proposed action is substantial, and information and data related to that impact are available to the petitioner, the Associate Administrator or the Chief Counsel may request the petitioner to provide—

(1) The costs and benefits to society and identifiable groups within society, quantifiable and otherwise;

(2) The direct effects (including preemption effects) of the proposed action on States, on the relationship between the Federal Government and the States, and on the distribution of power and responsibilities among the various levels of government;

(3) The regulatory burden on small businesses, small organizations and small governmental jurisdictions;

(4) The recordkeeping and reporting requirements and to whom they would apply; and

(5) Impacts on the quality of the natural and social environments.

(d) The Associate Administrator or Chief Counsel may return a petition that does not comply with the requirements of this section, accompanied by a written statement indicating the deficiencies in the petition.

§ 190.333 Processing of petition.

(a) *General.* Unless the Associate Administrator or the Chief Counsel otherwise specifies, no public hearing, argument, or other proceeding is held directly on a petition before its disposition under this section.

(b) *Grants.* If the Associate Administrator or the Chief Counsel determines that the petition contains adequate justification, he or she initiates rulemaking action under this subpart.

(c) *Denials.* If the Associate Administrator or the Chief Counsel determines that the petition does not justify rulemaking, the petition is denied.

(d) *Notification.* The Associate Administrator or the Chief Counsel will notify a petitioner, in writing, of the decision to grant or deny a petition for rulemaking.

§ 190.335 Petitions for reconsideration.

(a) Except as provided in § 190.339(d), any interested person may petition the Associate Administrator for reconsideration of any regulation issued under this subpart, or may petition the Chief Counsel for reconsideration of any procedural regulation issued under this subpart and contained in this subpart. The petition must be received not later than 30 days after publication of the

rule in the FEDERAL REGISTER. Petitions filed after that time will be considered as petitions filed under § 190.331. The petition must contain a brief statement of the complaint and an explanation as to why compliance with the rule is not practicable, is unreasonable, or is not in the public interest.

(b) If the petitioner requests the consideration of additional facts, the petitioner must state the reason they were not presented to the Associate Administrator or the Chief Counsel within the prescribed time.

(c) The Associate Administrator or the Chief Counsel does not consider repetitious petitions.

(d) Unless the Associate Administrator or the Chief Counsel otherwise provides, the filing of a petition under this section does not stay the effectiveness of the rule.

[Amdt. 190–8, 61 FR 50909, Sept. 27, 1996. Redesignated and amended by Amdt. 190–16, 78 FR 58914, Sept. 25, 2013]

§ 190.337 Proceedings on petitions for reconsideration.

(a) The Associate Administrator or the Chief Counsel may grant or deny, in whole or in part, any petition for reconsideration without further proceedings, except where a grant of the petition would result in issuance of a new final rule. In the event that the Associate Administrator or the Chief Counsel determines to reconsider any regulation, a final decision on reconsideration may be issued without further proceedings, or an opportunity to submit comment or information and data as deemed appropriate, may be provided. Whenever the Associate Administrator or the Chief Counsel determines that a petition should be granted or denied, the Office of the Chief Counsel prepares a notice of the grant or denial of a petition for reconsideration, for issuance to the petitioner, and the Associate Administrator or the Chief Counsel issues it to the petitioner. The Associate Administrator or the Chief Counsel may consolidate petitions relating to the same rules.

(b) It is the policy of the Associate Administrator or the Chief Counsel to issue notice of the action taken on a petition for reconsideration within 90 days after the date on which the regulation in question is published in the FEDERAL REGISTER, unless it is found impracticable to take action within that time. In cases where it is so found and the delay beyond that period is expected to be substantial, notice of that fact and the date by which it is expected that action will be taken is issued to the petitioner and published in the FEDERAL REGISTER.

§ 190.338 Appeals.

(a) Any interested person may appeal a denial of the Associate Administrator or the Chief Counsel, issued under § 190.333 or § 190.337, to the Administrator.

(b) An appeal must be received within 20 days of service of written notice to petitioner of the Associate Administrator's or the Chief Counsel's decision, or within 20 days from the date of publication of the decision in the FEDERAL REGISTER, and should set forth the contested aspects of the decision as well as any new arguments or information.

(c) Unless the Administrator otherwise provides, the filing of an appeal under this section does not stay the effectiveness of any rule.

[Amdt. 190–8, 61 FR 50909, Sept. 27, 1996. Redesignated and amended by Amdt. 190–16, 78 FR 58914, Sept. 25, 2013]

§ 190.339 Direct final rulemaking.

(a) Where practicable, the Administrator will use direct final rulemaking to issue the following types of rules:

(1) Minor, substantive changes to regulations;

(2) Incorporation by reference of the latest edition of technical or industry standards;

(3) Extensions of compliance dates; and

(4) Other noncontroversial rules where the Administrator determines that use of direct final rulemaking is in the public interest, and that a regulation is unlikely to result in adverse comment.

(b) The direct final rule will state an effective date. The direct final rule will also state that unless an adverse comment or notice of intent to file an adverse comment is received within the specified comment period, generally 60 days after publication of the direct final rule in the FEDERAL REGISTER,

the Administrator will issue a confirmation document, generally within 15 days after the close of the comment period, advising the public that the direct final rule will either become effective on the date stated in the direct final rule or at least 30 days after the publication date of the confirmation document, whichever is later.

(c) For purposes of this section, an adverse comment is one which explains why the rule would be inappropriate, including a challenge to the rule's underlying premise or approach, or would be ineffective or unacceptable without a change. Comments that are frivolous or insubstantial will not be considered adverse under this procedure. A comment recommending a rule change in addition to the rule will not be considered an adverse comment, unless the commenter states why the rule would be ineffective without the additional change.

(d) Only parties who filed comments to a direct final rule issued under this section may petition under § 190.335 for reconsideration of that direct final rule.

(e) If an adverse comment or notice of intent to file an adverse comment is received, a timely document will be published in the FEDERAL REGISTER advising the public and withdrawing the direct final rule in whole or in part. The Administrator may then incorporate the adverse comment into a subsequent direct final rule or may publish a notice of proposed rulemaking. A notice of proposed rulemaking will provide an opportunity for public comment, generally a minimum of 60 days, and will be processed in accordance with §§ 190.311–190.329.

§ 190.341 Special permits.

(a) *What is a special permit?* A special permit is an order by which PHMSA waives compliance with one or more of the Federal pipeline safety regulations under the standards set forth in 49 U.S.C. 60118(c) and subject to conditions set forth in the order. A special permit is issued to a pipeline operator (or prospective operator) for specified facilities that are or, absent waiver, would be subject to the regulation.

(b) *How do I apply for a special permit?* Applications for special permits must be submitted at least 120 days before the requested effective date using any of the following methods:

(1) Direct fax to PHMSA at: 202–366–4566; or

(2) Mail, express mail, or overnight courier to the Associate Administrator for Pipeline Safety, Pipeline and Hazardous Materials Safety Administration, 1200 New Jersey Avenue, SE., East Building, Washington, DC 20590.

(c) *What information must be contained in the application?* Applications must contain the following information:

(1) The name, mailing address, and telephone number of the applicant and whether the applicant is an operator;

(2) A detailed description of the pipeline facilities for which the special permit is sought, including:

(i) The beginning and ending points of the pipeline mileage to be covered and the Counties and States in which it is located;

(ii) Whether the pipeline is interstate or intrastate and a general description of the right-of-way including proximity of the affected segments to populated areas and unusually sensitive areas;

(iii) Relevant pipeline design and construction information including the year of installation, the material, grade, diameter, wall thickness, and coating type; and

(iv) Relevant operating information including operating pressure, leak history, and most recent testing or assessment results;

(3) A list of the specific regulation(s) from which the applicant seeks relief;

(4) An explanation of the unique circumstances that the applicant believes make the applicability of that regulation or standard (or portion thereof) unnecessary or inappropriate for its facility;

(5) A description of any measures or activities the applicant proposes to undertake as an alternative to compliance with the relevant regulation, including an explanation of how such measures will mitigate any safety or environmental risks;

(6) A description of any positive or negative impacts on affected stakeholders and a statement indicating how operating the pipeline pursuant to a special permit would be in the public interest;

(7) A certification that operation of the applicant's pipeline under the requested special permit would not be inconsistent with pipeline safety;

(8) If the application is for a renewal of a previously granted waiver or special permit, a copy of the original grant of the waiver or permit; and

(9) Any other information PHMSA may need to process the application including environmental analysis where necessary.

(d) *How does PHMSA handle special permit applications?* (1) *Public notice.* Upon receipt of an application for a special permit, PHMSA will provide notice to the public of its intent to consider the application and invite comment. In addition, PHMSA may consult with other Federal agencies before granting or denying an application on matters that PHMSA believes may have significance for proceedings under their areas of responsibility.

(2) *Grants and denials.* If the Associate Administrator determines that the application complies with the requirements of this section and that the waiver of the relevant regulation or standard is not inconsistent with pipeline safety, the Associate Administrator may grant the application, in whole or in part, on a temporary or permanent basis. Conditions may be imposed on the grant if the Associate Administrator concludes they are necessary to assure safety, environmental protection, or are otherwise in the public interest. If the Associate Administrator determines that the application does not comply with the requirements of this section or that a waiver is not justified, the application will be denied. Whenever the Associate Administrator grants or denies an application, notice of the decision will be provided to the applicant. PHMSA will post all special permits on its Web site at *http://www.phmsa.dot.gov/.*

(e) *Can a special permit be requested on an emergency basis?* Yes. PHMSA may grant an application for an emergency special permit without notice and comment or hearing if the Associate Administrator determines that such action is in the public interest, is not inconsistent with pipeline safety, and is necessary to address an actual or impending emergency involving pipeline transportation. For purposes of this section, an emergency event may be local, regional, or national in scope and includes significant fuel supply disruptions and natural or manmade disasters such as hurricanes, floods, earthquakes, terrorist acts, biological outbreaks, releases of dangerous radiological, chemical, or biological materials, war-related activities, or other similar events. PHMSA will determine on a case-by-case basis what duration is necessary to address the emergency. However, as required by statute, no emergency special permit may be issued for a period of more than 60 days. Each emergency special permit will automatically expire on the date specified in the permit. Emergency special permits may be renewed upon application to PHMSA only after notice and opportunity for a hearing on the renewal.

(f) *How do I apply for an emergency special permit?* Applications for emergency special permits may be submitted to PHMSA using any of the following methods:

(1) Direct fax to the Crisis Management Center at: 202–366–3768;

(2) Direct e-mail to PHMSA at: *phmsa.pipeline-emergencyspecpermit@dot.gov*; or

(3) Express mail/overnight courier to the Associate Administrator for Pipeline Safety, Pipeline and Hazardous Materials Safety Administration, 1200 New Jersey Avenue, SE., East Building, Washington, DC 20590.

(g) *What must be contained in an application for an emergency special permit?* In addition to the information required under paragraph (c) of this section, applications for emergency special permits must include:

(1) An explanation of the actual or impending emergency and how the applicant is affected;

(2) A citation of the regulations that are implicated and the specific reasons the permit is necessary to address the emergency (e.g., lack of accessibility, damaged equipment, insufficient manpower);

(3) A statement indicating how operating the pipeline pursuant to an emergency special permit is in the public interest (e.g., continuity of service, service restoration);

(4) A description of any proposed alternatives to compliance with the regulation (e.g., additional inspections and tests, shortened reassessment intervals); and

(5) A description of any measures to be taken after the emergency situation or permit expires—whichever comes first—to confirm long-term operational reliability of the pipeline facility.

NOTE TO PARAGRAPH (g): If PHMSA determines that handling of the application on an emergency basis is not warranted, PHMSA will notify the applicant and process the application under normal special permit procedures of this section.

(h) *In what circumstances will PHMSA revoke, suspend, or modify a special permit?* (1) PHMSA may revoke, suspend, or modify a special permit on a finding that:

(i) Intervening changes in Federal law mandate revocation, suspension, or modification of the special permit;

(ii) Based on a material change in conditions or circumstances, continued adherence to the terms of the special permit would be inconsistent with safety;

(iii) The application contained inaccurate or incomplete information, and the special permit would not have been granted had the application been accurate and complete;

(iv) The application contained deliberately inaccurate or incomplete information; or

(v) The holder has failed to comply with any material term or condition of the special permit.

(2) Except as provided in paragraph (h)(3) of this section, before a special permit is modified, suspended or revoked, PHMSA will notify the holder in writing of the proposed action and the reasons for it, and provide an opportunity to show cause why the proposed action should not be taken.

(i) The holder may file a written response that shows cause why the proposed action should not be taken within 30 days of receipt of notice of the proposed action.

(ii) After considering the holder's written response, or after 30 days have passed without response since receipt of the notice, PHMSA will notify the holder in writing of the final decision with a brief statement of reasons.

(3) If necessary to avoid a risk of significant harm to persons, property, or the environment, PHMSA may in the notification declare the proposed action immediately effective.

(4) Unless otherwise specified, the terms and conditions of a corrective action order, compliance order, or other order applicable to a pipeline facility covered by a special permit will take precedence over the terms of the special permit.

(5) A special permit holder may seek reconsideration of a decision under paragraph (h) of this section as provided in paragraph (i) of this section.

(i) *Can a denial of a request for a special permit or a revocation of an existing special permit be appealed?* Reconsideration of the denial of an application for a special permit or a revocation of an existing special permit may be sought by petition to the Associate Administrator. Petitions for reconsideration must be received by PHMSA within 20 calendar days of the notice of the grant or denial and must contain a brief statement of the issue and an explanation of why the petitioner believes that the decision being appealed is not in the public interest. The Associate Administrator may grant or deny, in whole or in part, any petition for reconsideration without further proceedings. The Associate Administrator's decision is the final administrative action.

(j) *Are documents related to an application for a special permit available for public inspection?* Documents related to an application, including the application itself, are available for public inspection on regulations.gov or the Docket Operations Facility to the extent such documents do not include information exempt from public disclosure under 5 U.S.C. 552(b). Applicants may request confidential treatment under part 7 of this title.

(k) *Am I subject to enforcement action for non-compliance with the terms and conditions of a special permit?* Yes. PHMSA inspects for compliance with the terms and conditions of special permits and if a probable violation is identified, PHMSA will initiate one or

more of the enforcement actions under subpart B of this part.

[73 FR 16568, Mar. 28, 2008, as amended at 74 FR 2893, Jan. 16, 2009; Amdt. 190–16, 78 FR 58914, Sept. 25, 2013]

PART 191—TRANSPORTATION OF NATURAL AND OTHER GAS BY PIPELINE; ANNUAL REPORTS, INCIDENT REPORTS, AND SAFETY-RELATED CONDITION REPORTS

Sec.

191.1 Scope.
191.3 Definitions.
191.5 Immediate notice of certain incidents.
191.7 Report submission requirements.
191.9 Distribution system: Incident report.
191.11 Distribution system: Annual report.
191.12 Distribution Systems: Mechanical Fitting Failure reports
191.13 Distribution systems reporting transmission pipelines; transmission or gathering systems reporting distribution pipelines.
191.15 Transmission systems; gathering systems; and liquefied natural gas facilities: Incident report.
191.17 Transmission systems; gathering systems; and liquefied natural gas facilities: Annual report.
191.21 OMB control number assigned to information collection.
191.22 National Registry of Pipeline and LNG operators.
191.23 Reporting safety-related conditions.
191.25 Filing safety-related condition reports.
191.27 Filing offshore pipeline condition reports.

AUTHORITY: 49 U.S.C. 5121, 60102, 60103, 60104, 60108, 60117, 60118, and 60124; and 49 CFR 1.53.

§ 191.1 Scope.

(a) This part prescribes requirements for the reporting of incidents, safety-related conditions, and annual pipeline summary data by operators of gas pipeline facilities located in the United States or Puerto Rico, including pipelines within the limits of the Outer Continental Shelf as that term is defined in the Outer Continental Shelf Lands Act (43 U.S.C. 1331).

(b) This part does not apply to—

(1) Offshore gathering of gas in State waters upstream from the outlet flange of each facility where hydrocarbons are produced or where produced hydrocarbons are first separated, dehydrated, or otherwise processed, whichever facility is farther downstream;

(2) Pipelines on the Outer Continental Shelf (OCS) that are producer-operated and cross into State waters without first connecting to a transporting operator's facility on the OCS, upstream (generally seaward) of the last valve on the last production facility on the OCS. Safety equipment protecting PHMSA-regulated pipeline segments is not excluded. Producing operators for those pipeline segments upstream of the last valve of the last production facility on the OCS may petition the Administrator, or designee, for approval to operate under PHMSA regulations governing pipeline design, construction, operation, and maintenance under 49 CFR 190.9.

(3) Pipelines on the Outer Continental Shelf upstream of the point at which operating responsibility transfers from a producing operator to a transporting operator; or

(4) Onshore gathering of gas—

(i) Through a pipeline that operates at less than 0 psig (0 kPa);

(ii) Through a pipeline that is not a regulated onshore gathering line (as determined in § 192.8 of this subchapter); and

(iii) Within inlets of the Gulf of Mexico, except for the requirements in § 192.612.

[Amdt. 191–5, 49 FR 18960, May 3, 1984, as amended by Amdt. 191–6, 53 FR 24949, July 1, 1988; Amdt. 191–11, 61 FR 27793, June 3, 1996; Amdt. 191–12, 62 FR 61695, Nov. 19, 1997; Amdt. 191–15, 68 FR 46111, Aug. 5, 2003; 70 FR 11139, Mar. 8, 2005; 75 FR 72904, Nov. 26, 2010]

§ 191.3 Definitions.

As used in this part and the PHMSA Forms referenced in this part—

Administrator means the Administrator, Pipeline and Hazardous Materials Safety Administration or his or her delegate

Gas means natural gas, flammable gas, or gas which is toxic or corrosive;

Incident means any of the following events:

(1) An event that involves a release of gas from a pipeline, or of liquefied natural gas, liquefied petroleum gas, refrigerant gas, or gas from an LNG facility, and that results in one or more of the following consequences:

(i) A death, or personal injury necessitating in-patient hospitalization;

(ii) Estimated property damage of $50,000 or more, including loss to the operator and others, or both, but excluding cost of gas lost;

(iii) Unintentional estimated gas loss of three million cubic feet or more;

(2) An event that results in an emergency shutdown of an LNG facility. Activation of an emergency shutdown system for reasons other than an actual emergency does not constitute an incident.

(3) An event that is significant in the judgment of the operator, even though it did not meet the criteria of paragraphs (1) or (2) of this definition.

LNG facility means a liquefied natural gas facility as defined in § 193.2007 of part 193 of this chapter;

Master Meter System means a pipeline system for distributing gas within, but not limited to, a definable area, such as a mobile home park, housing project, or apartment complex, where the operator purchases metered gas from an outside source for resale through a gas distribution pipeline system. The gas distribution pipeline system supplies the ultimate consumer who either purchases the gas directly through a meter or by other means, such as by rents;

Municipality means a city, county, or any other political subdivision of a State;

Offshore means beyond the line of ordinary low water along that portion of the coast of the United States that is in direct contact with the open seas and beyond the line marking the seaward limit of inland waters;

Operator means a person who engages in the transportation of gas;

Outer Continental Shelf means all submerged lands lying seaward and outside the area of lands beneath navigable waters as defined in Section 2 of the Submerged Lands Act (43 U.S.C. 1301) and of which the subsoil and seabed appertain to the United States and are subject to its jurisdiction and control.

Person means any individual, firm, joint venture, partnership, corporation, association, State, municipality, cooperative association, or joint stock association, and includes any trustee, receiver, assignee, or personal representative thereof;

Pipeline or *Pipeline System* means all parts of those physical facilities through which gas moves in transportation, including, but not limited to, pipe, valves, and other appurtenance attached to pipe, compressor units, metering stations, regulator stations, delivery stations, holders, and fabricated assemblies.

State includes each of the several States, the District of Columbia, and the Commonwealth of Puerto Rico;

Transportation of gas means the gathering, transmission, or distribution of gas by pipeline, or the storage of gas in or affecting interstate or foreign commerce.

[35 FR 320, Jan. 8, 1970, as amended by Amdt. 191–5, 49 FR 18960, May 3, 1984; Amdt. 191–10, 61 FR 18516, Apr. 26, 1996; Amdt. 191–12, 62 FR 61695, Nov. 19, 1997; 68 FR 11749, Mar. 12, 2003; 70 FR 11139, Mar. 8, 2005; 75 FR 72905, Nov. 26, 2010]

§ 191.5 Immediate notice of certain incidents.

(a) At the earliest practicable moment following discovery, each operator shall give notice in accordance with paragraph (b) of this section of each incident as defined in § 191.3.

(b) Each notice required by paragraph (a) of this section must be made to the National Response Center either by telephone to 800–424–8802 (in Washington, DC, 202 267–2675) or electronically at *http://www.nrc.uscg.mil* and must include the following information:

(1) Names of operator and person making report and their telephone numbers.

(2) The location of the incident.

(3) The time of the incident.

(4) The number of fatalities and personal injuries, if any.

(5) All other significant facts that are known by the operator that are relevant to the cause of the incident or extent of the damages.

[Amdt. 191–4, 47 FR 32720, July 29, 1982, as amended by Amdt. 191–5, 49 FR 18960, May 3, 1984; Amdt. 191–8, 54 FR 40878, Oct. 4, 1989; 75 FR 72905, Nov. 26, 2010]

§ 191.7 Report submission requirements.

(a) *General*. Except as provided in paragraph (b) of this section, an operator must submit each report required by this part electronically to the Pipeline and Hazardous Materials Safety Administration at *http://opsweb.phmsa.dot.gov* unless an alternative reporting method is authorized in accordance with paragraph (d) of this section.

(b) *Exceptions*. An operator is not required to submit a safety-related condition report (§ 191.25) or an offshore pipeline condition report (§ 191.27) electronically.

(c) *Safety-related conditions*. An operator must submit concurrently to the applicable State agency a safety-related condition report required by § 191.23 for intrastate pipeline transportation or when the State agency acts as an agent of the Secretary with respect to interstate transmission facilities.

(d) *Alternative Reporting Method*. If electronic reporting imposes an undue burden and hardship, an operator may submit a written request for an alternative reporting method to the Information Resources Manager, Office of Pipeline Safety, Pipeline and Hazardous Materials Safety Administration, PHP–20, 1200 New Jersey Avenue, SE, Washington DC 20590. The request must describe the undue burden and hardship. PHMSA will review the request and may authorize, in writing, an alternative reporting method. An authorization will state the period for which it is valid, which may be indefinite. An operator must contact PHMSA at 202–366–8075, or electronically to *informationresourcesmanager@dot.gov* or make arrangements for submitting a report that is due after a request for alternative reporting is submitted but before an authorization or denial is received.

[75 FR 72905, Nov. 26, 2010]

§ 191.9 Distribution system: Incident report.

(a) Except as provided in paragraph (c) of this section, each operator of a distribution pipeline system shall submit Department of Transportation Form RSPA F 7100.1 as soon as practicable but not more than 30 days after detection of an incident required to be reported under § 191.5.

(b) When additional relevant information is obtained after the report is submitted under paragraph (a) of this section, the operator shall make supplementary reports as deemed necessary with a clear reference by date and subject to the original report.

(c) Master meter operators are not required to submit an incident report as required by this section.

[Amdt. 191–5, 49 FR 18960, May 3, 1984, as amended at 75 FR 72905, Nov. 26, 2010]

§ 191.11 Distribution system: Annual report.

(a) *General*. Except as provided in paragraph (b) of this section, each operator of a distribution pipeline system must submit an annual report for that system on DOT Form PHMSA F 7100.1–1. This report must be submitted each year, not later than March 15, for the preceding calendar year.

(b) *Not required*. The annual report requirement in this section does not apply to a master meter system or to a petroleum gas system that serves fewer than 100 customers from a single source.

[75 FR 72905, Nov. 26, 2010]

§ 191.12 Distribution Systems: Mechanical Fitting Failure Reports

Each mechanical fitting failure, as required by § 192.1009, must be submitted on a Mechanical Fitting Failure Report Form PHMSA F–7100.1–2. An operator must submit a mechanical fitting failure report for each mechanical fitting failure that occurs within a calendar year not later than March 15 of the following year (for example, all mechanical failure reports for calendar year 2011 must be submitted no later than March 15, 2012). Alternatively, an operator may elect to submit its reports throughout the year. In addition, an operator must also report this information to the State pipeline safety authority if a State has obtained regulatory authority over the operator's pipeline.

[76 FR 5499, Feb. 1, 2011]

§ 191.13 Distribution systems reporting transmission pipelines; transmission or gathering systems reporting distribution pipelines.

Each operator, primarily engaged in gas distribution, who also operates gas transmission or gathering pipelines shall submit separate reports for these pipelines as required by §§ 191.15 and 191.17. Each operator, primarily engaged in gas transmission or gathering, who also operates gas distribution pipelines shall submit separate reports for these pipelines as required by §§ 191.9 and 191.11.

[Amdt. 191–5, 49 FR 18961, May 3, 1984]

§ 191.15 Transmission systems; gathering systems; and liquefied natural gas facilities: Incident report.

(a) *Transmission or Gathering*. Each operator of a transmission or a gathering pipeline system must submit DOT Form PHMSA F 7100.2 as soon as practicable but not more than 30 days after detection of an incident required to be reported under § 191.5 of this part.

(b) *LNG*. Each operator of a liquefied natural gas plant or facility must submit DOT Form PHMSA F 7100.3 as soon as practicable but not more than 30 days after detection of an incident required to be reported under § 191.5 of this part.

(c) *Supplemental report*. Where additional related information is obtained after a report is submitted under paragraph (a) or (b) of this section, the operator must make a supplemental report as soon as practicable with a clear reference by date to the original report.

[75 FR 72905, Nov. 26, 2010]

§ 191.17 Transmission systems; gathering systems; and liquefied natural gas facilities: Annual report.

(a) *Transmission or Gathering*. Each operator of a transmission or a gathering pipeline system must submit an annual report for that system on DOT Form PHMSA 7100.2.1. This report must be submitted each year, not later than March 15, for the preceding calendar year, except that for the 2010 reporting year the report must be submitted by June 15, 2011.

(b) *LNG*. Each operator of a liquefied natural gas facility must submit an annual report for that system on DOT Form PHMSA 7100.3–1 This report must be submitted each year, not later than March 15, for the preceding calendar year, except that for the 2010 reporting year the report must be submitted by June 15, 2011.

[75 FR 72905, Nov. 26, 2010]

§ 191.21 OMB control number assigned to information collection.

This section displays the control number assigned by the Office of Management and Budget (OMB) to the information collection requirements in this part. The Paperwork Reduction Act requires agencies to display a current control number assigned by the Director of OMB for each agency information collection requirement.

OMB CONTROL NUMBER 2137–0522

Section of 49 CFR Part 191 where identified	Form No.
191.5	Telephonic.
191.9	PHMSA 7100.1, PHMSA 7100.3.
191.11	PHMSA 7100.1–1, PHMSA 7100.3–1.
191.15	PHMSA 7100.2.
191.17	PHMSA 7100.2–1.
191.22	PHMSA 1000.1.

[75 FR 72905, Nov. 26, 2010]

§ 191.22 National Registry of Pipeline and LNG operators.

(a) OPID Request. Effective January 1, 2012, each operator of a gas pipeline, gas pipeline facility, LNG plant or LNG facility must obtain from PHMSA an Operator Identification Number (OPID). An OPID is assigned to an operator for the pipeline or pipeline system for which the operator has primary responsibility. To obtain on OPID, an operator must complete an

OPID Assignment Request DOT Form PHMSA F 1000.1 through the National Registry of Pipeline and LNG Operators in accordance with § 191.7.

(b) OPID validation. An operator who has already been assigned one or more OPID by January 1, 2011, must validate the information associated with each OPID through the National Registry of Pipeline and LNG Operators at *http://opsweb.phmsa.dot.gov*, and correct that information as necessary, no later than June 30, 2012.

(c) Changes. Each operator of a gas pipeline, gas pipeline facility, LNG plant or LNG facility must notify PHMSA electronically through the National Registry of Pipeline and LNG Operators at *http://opsweb.phmsa.dot.gov* of certain events.

(1) An operator must notify PHMSA of any of the following events not later than 60 days before the event occurs:

(i) Construction or any planned rehabilitation, replacement, modification, upgrade, uprate, or update of a facility, other than a section of line pipe, that costs $10 million or more. If 60 day notice is not feasible because of an emergency, an operator must notify PHMSA as soon as practicable;

(ii) Construction of 10 or more miles of a new pipeline; or

(iii) Construction of a new LNG plant or LNG facility.

(2) An operator must notify PHMSA of any of the following events not later than 60 days after the event occurs:

(i) A change in the primary entity responsible (i.e., with an assigned OPID) for managing or administering a safety program required by this part covering pipeline facilities operated under multiple OPIDs.

(ii) A change in the name of the operator;

(iii) A change in the entity (*e.g.*, company, municipality) responsible for an existing pipeline, pipeline segment, pipeline facility, or LNG facility;

(iv) The acquisition or divestiture of 50 or more miles of a pipeline or pipeline system subject to Part 192 of this subchapter; or

(v) The acquisition or divestiture of an existing LNG plant or LNG facility subject to Part 193 of this subchapter.

(d) Reporting. An operator must use the OPID issued by PHMSA for all reporting requirements covered under this subchapter and for submissions to the National Pipeline Mapping System.

[Amdt. No. 191–21, 75 FR 72906, Nov. 26, 2010]

§ 191.23 Reporting safety-related conditions.

(a) Except as provided in paragraph (b) of this section, each operator shall report in accordance with § 191.25 the existence of any of the following safety-related conditions involving facilities in service:

(1) In the case of a pipeline (other than an LNG facility) that operates at a hoop stress of 20 percent or more of its specified minimum yield strength, general corrosion that has reduced the wall thickness to less than that required for the maximum allowable operating pressure, and localized corrosion pitting to a degree where leakage might result.

(2) Unintended movement or abnormal loading by environmental causes, such as an earthquake, landslide, or flood, that impairs the serviceability of a pipeline or the structural integrity or reliability of an LNG facility that contains, controls, or processes gas or LNG.

(3) Any crack or other material defect that impairs the structural integrity or reliability of an LNG facility that contains, controls, or processes gas or LNG.

(4) Any material defect or physical damage that impairs the serviceability of a pipeline that operates at a hoop stress of 20 percent or more of its specified minimum yield strength.

(5) Any malfunction or operating error that causes the pressure of a pipeline or LNG facility that contains or processes gas or LNG to rise above its maximum allowable operating pressure (or working pressure for LNG facilities) plus the build-up allowed for operation of pressure limiting or control devices.

(6) A leak in a pipeline or LNG facility that contains or processes gas or LNG that constitutes an emergency.

(7) Inner tank leakage, ineffective insulation, or frost heave that impairs the structural integrity of an LNG storage tank.

(8) Any safety-related condition that could lead to an imminent hazard and

causes (either directly or indirectly by remedial action of the operator), for purposes other than abandonment, a 20 percent or more reduction in operating pressure or shutdown of operation of a pipeline or an LNG facility that contains or processes gas or LNG.

(b) A report is not required for any safety-related condition that—

(1) Exists on a master meter system or a customer-owned service line;

(2) Is an incident or results in an incident before the deadline for filing the safety-related condition report;

(3) Exists on a pipeline (other than an LNG facility) that is more than 220 yards (200 meters) from any building intended for human occupancy or outdoor place of assembly, except that reports are required for conditions within the right-of-way of an active railroad, paved road, street, or highway; or

(4) Is corrected by repair or replacement in accordance with applicable safety standards before the deadline for filing the safety-related condition report, except that reports are required for conditions under paragraph (a)(1) of this section other than localized corrosion pitting on an effectively coated and cathodically protected pipeline.

[Amdt. 191–6, 53 FR 24949, July 1, 1988, as amended by Amdt. 191–14, 63 FR 37501, July 13, 1998]

§ 191.25 Filing safety-related condition reports.

(a) Each report of a safety-related condition under § 191.23(a) must be filed (received by the Associate Administrator) in writing within five working days (not including Saturday, Sunday, or Federal Holidays) after the day a representative of the operator first determines that the condition exists, but not later than 10 working days after the day a representative of the operator discovers the condition. Separate conditions may be described in a single report if they are closely related. Reports may be transmitted by facsimile at (202) 366–7128.

(b) The report must be headed ''Safety-Related Condition Report'' and provide the following information:

(1) Name and principal address of operator.

(2) Date of report.

(3) Name, job title, and business telephone number of person submitting the report.

(4) Name, job title, and business telephone number of person who determined that the condition exists.

(5) Date condition was discovered and date condition was first determined to exist.

(6) Location of condition, with reference to the State (and town, city, or county) or offshore site, and as appropriate, nearest street address, offshore platform, survey station number, milepost, landmark, or name of pipeline.

(7) Description of the condition, including circumstances leading to its discovery, any significant effects of the condition on safety, and the name of the commodity transported or stored.

(8) The corrective action taken (including reduction of pressure or shutdown) before the report is submitted and the planned follow-up or future corrective action, including the anticipated schedule for starting and concluding such action.

[Amdt. 191–6, 53 FR 24949, July 1, 1988; 53 FR 29800, Aug. 8, 1988, as amended by Amdt. 191–7, 54 FR 32344, Aug. 7, 1989; Amdt. 191–8, 54 FR 40878, Oct. 4, 1989; Amdt. 191–10, 61 FR 18516, Apr. 26, 1996]

§ 191.27 Filing offshore pipeline condition reports.

(a) Each operator shall, within 60 days after completion of the inspection of all its underwater pipelines subject to § 192.612(a), report the following information:

(1) Name and principal address of operator.

(2) Date of report.

(3) Name, job title, and business telephone number of person submitting the report.

(4) Total length of pipeline inspected.

(5) Length and date of installation of each exposed pipeline segment, and location, including, if available, the location according to the Minerals Management Service or state offshore area and block number tract.

(6) Length and date of installation of each pipeline segment, if different from a pipeline segment identified under paragraph (a)(5) of this section, that is

a hazard to navigation, and the location, including, if available, the location according to the Minerals Management Service or state offshore area and block number tract.

(b) The report shall be mailed to the Office of Pipeline Safety, Pipeline and Hazardous Materials Safety Administration, Department of Transportation, Information Resources Manager, PHP–10, 1200 New Jersey Avenue SE., Washington, DC 20590-0001.

[Amdt. 191–9, 56 FR 63770, Dec. 5, 1991, as amended by Amdt. 191–14, 63 FR 37501, July 13, 1998; 70 FR 11139, Mar. 8, 2005; 73 FR 16570, Mar. 28, 2008; 74 FR 2894, Jan. 16, 2009]

PART 192—TRANSPORTATION OF NATURAL AND OTHER GAS BY PIPELINE: MINIMUM FEDERAL SAFETY STANDARDS

Subpart A—General

Sec.
192.1 What is the scope of this part?
192.3 Definitions.
192.5 Class locations.
192.7 What documents are incorporated by reference partly or wholly in this part?
192.8 How are onshore gathering lines and regulated onshore gathering lines determined?
192.9 What requirements apply to gathering lines?
192.10 Outer continental shelf pipelines.
192.11 Petroleum gas systems.
192.13 What general requirements apply to pipelines regulated under this part?
192.14 Conversion to service subject to this part.
192.15 Rules of regulatory construction.
192.16 Customer notification.

Subpart B—Materials

192.51 Scope.
192.53 General.
192.55 Steel pipe.
192.57 [Reserved]
192.59 Plastic pipe.
192.61 [Reserved]
192.63 Marking of materials.
192.65 Transportation of pipe.

Subpart C—Pipe Design

192.101 Scope.
192.103 General.
192.105 Design formula for steel pipe.
192.107 Yield strength (*S*) for steel pipe.
192.109 Nominal wall thickness (*t*) for steel pipe.
192.111 Design factor (*F*) for steel pipe.
192.112 Additional design requirements for steel pipe using alternative maximum allowable operating pressure.
192.113 Longitudinal joint factor (*E*) for steel pipe.
192.115 Temperature derating factor (*T*) for steel pipe.
192.117 [Reserved]
192.119 [Reserved]
192.121 Design of plastic pipe.
192.123 Design limitations for plastic pipe.
192.125 Design of copper pipe.

Subpart D—Design of Pipeline Components

192.141 Scope.
192.143 General requirements.
192.144 Qualifying metallic components.
192.145 Valves.
192.147 Flanges and flange accessories.
192.149 Standard fittings.
192.150 Passage of internal inspection devices.
192.151 Tapping.
192.153 Components fabricated by welding.
192.155 Welded branch connections.
192.157 Extruded outlets.
192.159 Flexibility.
192.161 Supports and anchors.
192.163 Compressor stations: Design and construction.
192.165 Compressor stations: Liquid removal.
192.167 Compressor stations: Emergency shutdown.
192.169 Compressor stations: Pressure limiting devices.
192.171 Compressor stations: Additional safety equipment.
192.173 Compressor stations: Ventilation.
192.175 Pipe-type and bottle-type holders.
192.177 Additional provisions for bottle-type holders.
192.179 Transmission line valves.
192.181 Distribution line valves.
192.183 Vaults: Structural design requirements.
192.185 Vaults: Accessibility.
192.187 Vaults: Sealing, venting, and ventilation.
192.189 Vaults: Drainage and waterproofing.
192.191 Design pressure of plastic fittings.
192.193 Valve installation in plastic pipe.
192.195 Protection against accidental overpressuring.
192.197 Control of the pressure of gas delivered from high-pressure distribution systems.
192.199 Requirements for design of pressure relief and limiting devices.
192.201 Required capacity of pressure relieving and limiting stations.
192.203 Instrument, control, and sampling pipe and components.

Subpart E—Welding of Steel in Pipelines

192.221 Scope.

192.225 Welding procedures.
192.227 Qualification of welders.
192.229 Limitations on welders.
192.231 Protection from weather.
192.233 Miter joints.
192.235 Preparation for welding.
192.241 Inspection and test of welds.
192.243 Nondestructive testing.
192.245 Repair or removal of defects.

Subpart F—Joining of Materials Other Than by Welding

192.271 Scope.
192.273 General.
192.275 Cast iron pipe.
192.277 Ductile iron pipe.
192.279 Copper pipe.
192.281 Plastic pipe.
192.283 Plastic pipe: Qualifying joining procedures.
192.285 Plastic pipe: Qualifying persons to make joints.
192.287 Plastic pipe: Inspection of joints.

Subpart G—General Construction Requirements for Transmission Lines and Mains

192.301 Scope.
192.303 Compliance with specifications or standards.
192.305 Inspection: General.
192.307 Inspection of materials.
192.309 Repair of steel pipe.
192.311 Repair of plastic pipe.
192.313 Bends and elbows.
192.315 Wrinkle bends in steel pipe.
192.317 Protection from hazards.
192.319 Installation of pipe in a ditch.
192.321 Installation of plastic pipe.
192.323 Casing.
192.325 Underground clearance.
192.327 Cover.
192.328 Additional construction requirements for steel pipe using alternative maximum allowable operating pressure.

Subpart H—Customer Meters, Service Regulators, and Service Lines

192.351 Scope.
192.353 Customer meters and regulators: Location.
192.355 Customer meters and regulators: Protection from damage.
192.357 Customer meters and regulators: Installation.
192.359 Customer meter installations: Operating pressure.
192.361 Service lines: Installation.
192.363 Service lines: Valve requirements.
192.365 Service lines: Location of valves.
192.367 Service lines: General requirements for connections to main piping.
192.369 Service lines: Connections to cast iron or ductile iron mains.
192.371 Service lines: Steel.
192.373 Service lines: Cast iron and ductile iron.
192.375 Service lines: Plastic.
192.377 Service lines: Copper.
192.379 New service lines not in use.
192.381 Service lines: Excess flow valve performance standards.
192.383 Excess flow valve installation.

Subpart I—Requirements for Corrosion Control

192.451 Scope.
192.452 How does this subpart apply to converted pipelines and regulated onshore gathering lines?
192.453 General.
192.455 External corrosion control: Buried or submerged pipelines installed after July 31, 1971.
192.457 External corrosion control: Buried or submerged pipelines installed before August 1, 1971.
192.459 External corrosion control: Examination of buried pipeline when exposed.
192.461 External corrosion control: Protective coating.
192.463 External corrosion control: Cathodic protection.
192.465 External corrosion control: Monitoring.
192.467 External corrosion control: Electrical isolation.
192.469 External corrosion control: Test stations.
192.471 External corrosion control: Test leads.
192.473 External corrosion control: Interference currents.
192.475 Internal corrosion control: General.
192.476 Internal corrosion control: Design and construction of transmission line.
192.477 Internal corrosion control: Monitoring.
192.479 Atmospheric corrosion control: General.
192.481 Atmospheric corrosion control: Monitoring.
192.483 Remedial measures: General.
192.485 Remedial measures: Transmission lines.
192.487 Remedial measures: Distribution lines other than cast iron or ductile iron lines.
192.489 Remedial measures: Cast iron and ductile iron pipelines.
192.490 Direct assessment.
192.491 Corrosion control records.

Subpart J—Test Requirements

192.501 Scope.
192.503 General requirements.
192.505 Strength test requirements for steel pipeline to operate at a hoop stress of 30 percent or more of SMYS.

192.507 Test requirements for pipelines to operate at a hoop stress less than 30 percent of SMYS and at or above 100 p.s.i. (689 kPa) gage.
192.509 Test requirements for pipelines to operate below 100 p.s.i. (689 kPa) gage.
192.511 Test requirements for service lines.
192.513 Test requirements for plastic pipelines.
192.515 Environmental protection and safety requirements.
192.517 Records.

Subpart K—Uprating

192.551 Scope.
192.553 General requirements.
192.555 Uprating to a pressure that will produce a hoop stress of 30 percent or more of SMYS in steel pipelines.
192.557 Uprating: Steel pipelines to a pressure that will produce a hoop stress less than 30 percent of SMYS; plastic, cast iron, and ductile iron pipelines.

Subpart L—Operations

192.601 Scope.
192.603 General provisions.
192.605 Procedural manual for operations, maintenance, and emergencies.
192.607 [Reserved]
192.609 Change in class location: Required study.
192.611 Change in class location: Confirmation or revision of maximum allowable operating pressure.
192.612 Underwater inspection and reburial of pipelines in the Gulf of Mexico and its inlets.
192.613 Continuing surveillance.
192.614 Damage prevention program.
192.615 Emergency plans.
192.616 Public awareness.
192.617 Investigation of failures.
192.619 What is the maximum allowable operating pressure for steel or plastic pipelines?
192.620 Alternative maximum allowable operating pressure for certain steel pipelines.
192.621 Maximum allowable operating pressure: High-pressure distribution systems.
192.623 Maximum and minimum allowable operating pressure; Low-pressure distribution systems.
192.625 Odorization of gas.
192.627 Tapping pipelines under pressure.
192.629 Purging of pipelines.
192.631 Control room management.

Subpart M—Maintenance

192.701 Scope.
192.703 General.
192.705 Transmission lines: Patrolling.
192.706 Transmission lines: Leakage surveys.
192.707 Line markers for mains and transmission lines.
192.709 Transmission lines: Record keeping.
192.711 Transmission lines: General requirements for repair procedures.
192.713 Transmission lines: Permanent field repair of imperfections and damages.
192.715 Transmission lines: Permanent field repair of welds.
192.717 Transmission lines: Permanent field repair of leaks.
192.719 Transmission lines: Testing of repairs.
192.721 Distribution systems: Patrolling.
192.723 Distribution systems: Leakage surveys.
192.725 Test requirements for reinstating service lines.
192.727 Abandonment or deactivation of facilities.
192.731 Compressor stations: Inspection and testing of relief devices.
192.735 Compressor stations: Storage of combustible materials.
192.736 Compressor stations: Gas detection.
192.739 Pressure limiting and regulating stations: Inspection and testing.
192.741 Pressure limiting and regulating stations: Telemetering or recording gauges.
192.743 Pressure limiting and regulating stations: Capacity of relief devices.
192.745 Valve maintenance: Transmission lines.
192.747 Valve maintenance: Distribution systems.
192.749 Vault maintenance.
192.751 Prevention of accidental ignition.
192.753 Caulked bell and spigot joints.
192.755 Protecting cast-iron pipelines.

Subpart N—Qualification of Pipeline Personnel

192.801 Scope.
192.803 Definitions.
192.805 Qualification Program.
192.807 Recordkeeping.
192.809 General.

Subpart O—Gas Transmission Pipeline Integrity Management

192.901 What do the regulations in this subpart cover?
192.903 What definitions apply to this subpart?
192.905 How does an operator identify a high consequence area?
192.907 What must an operator do to implement this subpart?
192.909 How can an operator change its integrity management program?
192.911 What are the elements of an integrity management program?

192.913 When may an operator deviate its program from certain requirements of this subpart?
192.915 What knowledge and training must personnel have to carry out an integrity management program?
192.917 How does an operator identify potential threats to pipeline integrity and use the threat identification in its integrity program?
192.919 What must be in the baseline assessment plan?
192.921 How is the baseline assessment to be conducted?
192.923 How is direct assessment used and for what threats?
192.925 What are the requirements for using External Corrosion Direct Assessment (ECDA)?
192.927 What are the requirements for using Internal Corrosion Direct Assessment (ICDA)?
192.929 What are the requirements for using Direct Assessment for Stress Corrosion Cracking (SCCDA)?
192.931 How may Confirmatory Direct Assessment (CDA) be used?
192.933 What actions must be taken to address integrity issues?
192.935 What additional preventive and mitigative measures must an operator take?
192.937 What is a continual process of evaluation and assessment to maintain a pipeline's integrity?
192.939 What are the required reassessment intervals?
192.941 What is a low stress reassessment?
192.943 When can an operator deviate from these reassessment intervals?
192.945 What methods must an operator use to measure program effectiveness?
192.947 What records must an operator keep?
192.949 How does an operator notify PHMSA?
192.951 Where does an operator file a report?

Subpart P—Gas Distribution Pipeline Integrity Management (IM)

192.1001 What definitions apply to this subpart?
192.1003 What do the regulations in this subpart cover?
192.1005 What must a gas distribution operator (other than a master meter or small LPG operator) do to implement this subpart?
192.1007 What are the required elements of an integrity management plan?
192.1009 What must an operator report when a mechanical fitting fails?
192.1011 What records must an operator keep?
192.1013 When may an operator deviate from required periodic inspections of this part?
192.1015 What must a master meter or small liquefied petroleum gas (LPG) operator do to implement this subpart?

APPENDIX A TO PART 192 [RESERVED]
APPENDIX B TO PART 192—QUALIFICATION OF PIPE
APPENDIX C TO PART 192—QUALIFICATION OF WELDERS FOR LOW STRESS LEVEL PIPE
APPENDIX D TO PART 192—CRITERIA FOR CATHODIC PROTECTION AND DETERMINATION OF MEASUREMENTS
APPENDIX E TO PART 192—GUIDANCE ON DETERMINING HIGH CONSEQUENCE AREAS AND ON CARRYING OUT REQUIREMENTS IN THE INTEGRITY MANAGEMENT RULE

AUTHORITY: 49 U.S.C. 5103, 60102, 60104, 60108, 60109, 60110, 60113, 60116, 60118, and 60137; and 49 CFR 1.53.

SOURCE: 35 FR 13257, Aug. 19, 1970, unless otherwise noted.

EDITORIAL NOTE: Nomenclature changes to part 192 appear at 71 FR 33406, June 9, 2006.

Subpart A—General

§ 192.1 What is the scope of this part?

(a) This part prescribes minimum safety requirements for pipeline facilities and the transportation of gas, including pipeline facilities and the transportation of gas within the limits of the outer continental shelf as that term is defined in the Outer Continental Shelf Lands Act (43 U.S.C. 1331).

(b) This part does not apply to—

(1) Offshore gathering of gas in State waters upstream from the outlet flange of each facility where hydrocarbons are produced or where produced hydrocarbons are first separated, dehydrated, or otherwise processed, whichever facility is farther downstream;

(2) Pipelines on the Outer Continental Shelf (OCS) that are producer-operated and cross into State waters without first connecting to a transporting operator's facility on the OCS, upstream (generally seaward) of the last valve on the last production facility on the OCS. Safety equipment protecting PHMSA-regulated pipeline segments is not excluded. Producing operators for those pipeline segments upstream of the last valve of the last production facility on the OCS may petition the Administrator, or designee, for

approval to operate under PHMSA regulations governing pipeline design, construction, operation, and maintenance under 49 CFR 190.9;

(3) Pipelines on the Outer Continental Shelf upstream of the point at which operating responsibility transfers from a producing operator to a transporting operator;

(4) Onshore gathering of gas—

(i) Through a pipeline that operates at less than 0 psig (0 kPa);

(ii) Through a pipeline that is not a regulated onshore gathering line (as determined in § 192.8); and

(iii) Within inlets of the Gulf of Mexico, except for the requirements in § 192.612; or

(5) Any pipeline system that transports only petroleum gas or petroleum gas/air mixtures to—

(i) Fewer than 10 customers, if no portion of the system is located in a public place; or

(ii) A single customer, if the system is located entirely on the customer's premises (no matter if a portion of the system is located in a public place).

[35 FR 13257, Aug. 19, 1970, as amended by Amdt. 192–27, 41 FR 34605, Aug. 16, 1976; Amdt. 192–67, 56 FR 63771, Dec. 5, 1991; Amdt. 192–78, 61 FR 28782, June 6, 1996; Amdt. 192–81, 62 FR 61695, Nov. 19, 1997; Amdt. 192–92, 68 FR 46112, Aug. 5, 2003; 70 FR 11139, Mar. 8, 2005; Amdt. 192–102, 71 FR 13301, Mar. 15, 2006; Amdt. 192–103, 72 FR 4656, Feb. 1, 2007]

§ 192.3 Definitions.

As used in this part:

Abandoned means permanently removed from service.

Active corrosion means continuing corrosion that, unless controlled, could result in a condition that is detrimental to public safety.

Administrator means the Administrator, Pipeline and Hazardous Materials Safety Administration or his or her delegate.

Alarm means an audible or visible means of indicating to the controller that equipment or processes are outside operator-defined, safety-related parameters.

Control room means an operations center staffed by personnel charged with the responsibility for remotely monitoring and controlling a pipeline facility.

Controller means a qualified individual who remotely monitors and controls the safety-related operations of a pipeline facility via a SCADA system from a control room, and who has operational authority and accountability for the remote operational functions of the pipeline facility.

Customer meter means the meter that measures the transfer of gas from an operator to a consumer.

Distribution line means a pipeline other than a gathering or transmission line.

Electrical survey means a series of closely spaced pipe-to-soil readings over pipelines which are subsequently analyzed to identify locations where a corrosive current is leaving the pipeline.

Exposed underwater pipeline means an underwater pipeline where the top of the pipe protrudes above the underwater natural bottom (as determined by recognized and generally accepted practices) in waters less than 15 feet (4.6 meters) deep, as measured from mean low water.

Gas means natural gas, flammable gas, or gas which is toxic or corrosive.

Gathering line means a pipeline that transports gas from a current production facility to a transmission line or main.

Gulf of Mexico and its inlets means the waters from the mean high water mark of the coast of the Gulf of Mexico and its inlets open to the sea (excluding rivers, tidal marshes, lakes, and canals) seaward to include the territorial sea and Outer Continental Shelf to a depth of 15 feet (4.6 meters), as measured from the mean low water.

Hazard to navigation means, for the purposes of this part, a pipeline where the top of the pipe is less than 12 inches (305 millimeters) below the underwater natural bottom (as determined by recognized and generally accepted practices) in waters less than 15 feet (4.6 meters) deep, as measured from the mean low water.

High-pressure distribution system means a distribution system in which the gas pressure in the main is higher than the pressure provided to the customer.

Line section means a continuous run of transmission line between adjacent

compressor stations, between a compressor station and storage facilities, between a compressor station and a block valve, or between adjacent block valves.

Listed specification means a specification listed in section I of appendix B of this part.

Low-pressure distribution system means a distribution system in which the gas pressure in the main is substantially the same as the pressure provided to the customer.

Main means a distribution line that serves as a common source of supply for more than one service line.

Maximum actual operating pressure means the maximum pressure that occurs during normal operations over a period of 1 year.

Maximum allowable operating pressure (MAOP) means the maximum pressure at which a pipeline or segment of a pipeline may be operated under this part.

Municipality means a city, county, or any other political subdivision of a State.

Offshore means beyond the line of ordinary low water along that portion of the coast of the United States that is in direct contact with the open seas and beyond the line marking the seaward limit of inland waters.

Operator means a person who engages in the transportation of gas.

Outer Continental Shelf means all submerged lands lying seaward and outside the area of lands beneath navigable waters as defined in Section 2 of the Submerged Lands Act (43 U.S.C. 1301) and of which the subsoil and seabed appertain to the United States and are subject to its jurisdiction and control.

Person means any individual, firm, joint venture, partnership, corporation, association, State, municipality, cooperative association, or joint stock association, and including any trustee, receiver, assignee, or personal representative thereof.

Petroleum gas means propane, propylene, butane, (normal butane or isobutanes), and butylene (including isomers), or mixtures composed predominantly of these gases, having a vapor pressure not exceeding 208 psi (1434 kPa) gage at 100 °F (38 °C).

Pipe means any pipe or tubing used in the transportation of gas, including pipe-type holders.

Pipeline means all parts of those physical facilities through which gas moves in transportation, including pipe, valves, and other appurtenance attached to pipe, compressor units, metering stations, regulator stations, delivery stations, holders, and fabricated assemblies.

Pipeline environment includes soil resistivity (high or low), soil moisture (wet or dry), soil contaminants that may promote corrosive activity, and other known conditions that could affect the probability of active corrosion.

Pipeline facility means new and existing pipelines, rights-of-way, and any equipment, facility, or building used in the transportation of gas or in the treatment of gas during the course of transportation.

Service line means a distribution line that transports gas from a common source of supply to an individual customer, to two adjacent or adjoining residential or small commercial customers, or to multiple residential or small commercial customers served through a meter header or manifold. A service line ends at the outlet of the customer meter or at the connection to a customer's piping, whichever is further downstream, or at the connection to customer piping if there is no meter.

Service regulator means the device on a service line that controls the pressure of gas delivered from a higher pressure to the pressure provided to the customer. A service regulator may serve one customer or multiple customers through a meter header or manifold.

SMYS means specified minimum yield strength is:

(1) For steel pipe manufactured in accordance with a listed specification, the yield strength specified as a minimum in that specification; or

(2) For steel pipe manufactured in accordance with an unknown or unlisted specification, the yield strength determined in accordance with §192.107(b).

State means each of the several States, the District of Columbia, and the Commonwealth of Puerto Rico.

Supervisory Control and Data Acquisition (SCADA) system means a computer-

based system or systems used by a controller in a control room that collects and displays information about a pipeline facility and may have the ability to send commands back to the pipeline facility.

Transmission line means a pipeline, other than a gathering line, that: (1) Transports gas from a gathering line or storage facility to a distribution center, storage facility, or large volume customer that is not down-stream from a distribution center; (2) operates at a hoop stress of 20 percent or more of SMYS; or (3) transports gas within a storage field.

NOTE: A large volume customer may receive similar volumes of gas as a distribution center, and includes factories, power plants, and institutional users of gas.

Transportation of gas means the gathering, transmission, or distribution of gas by pipeline or the storage of gas, in or affecting interstate or foreign commerce.

[Amdt. 192–13, 38 FR 9084, Apr. 10, 1973, as amended by Amdt. 192–27, 41 FR 34605, Aug. 16, 1976; Amdt. 192–58, 53 FR 1635, Jan. 21, 1988; Amdt. 192–67, 56 FR 63771, Dec. 5, 1991; Amdt. 192–72, 59 FR 17281, Apr. 12, 1994; Amdt. 192–78, 61 FR 28783, June 6, 1996; Amdt. 192–81, 62 FR 61695, Nov. 19, 1997; Amdt. 192–85, 63 FR 37501, July 13, 1998; Amdt. 192–89, 65 FR 54443, Sept. 8, 2000; 68 FR 11749, Mar. 12, 2003; Amdt. 192–93, 68 FR 53900, Sept. 15, 2003; Amdt. 192–98, 69 FR 48406, Aug. 10, 2004; Amdt. 192–94, 69 FR 54592, Sept. 9, 2004; 70 FR 3148, Jan. 21, 2005; 70 FR 11139, Mar. 8, 2005; Amdt. 192–112, 74 FR 63326, Dec. 3, 2009; Amdt. 192–114, 75 FR 48601, Aug. 11, 2010]

§ 192.5 Class locations.

(a) This section classifies pipeline locations for purposes of this part. The following criteria apply to classifications under this section.

(1) A ''class location unit'' is an onshore area that extends 220 yards (200 meters) on either side of the centerline of any continuous 1- mile (1.6 kilometers) length of pipeline.

(2) Each separate dwelling unit in a multiple dwelling unit building is counted as a separate building intended for human occupancy.

(b) Except as provided in paragraph (c) of this section, pipeline locations are classified as follows:

(1) A Class 1 location is:

(i) An offshore area; or

(ii) Any class location unit that has 10 or fewer buildings intended for human occupancy.

(2) A Class 2 location is any class location unit that has more than 10 but fewer than 46 buildings intended for human occupancy.

(3) A Class 3 location is:

(i) Any class location unit that has 46 or more buildings intended for human occupancy; or

(ii) An area where the pipeline lies within 100 yards (91 meters) of either a building or a small, well-defined outside area (such as a playground, recreation area, outdoor theater, or other place of public assembly) that is occupied by 20 or more persons on at least 5 days a week for 10 weeks in any 12-month period. (The days and weeks need not be consecutive.)

(4) A Class 4 location is any class location unit where buildings with four or more stories above ground are prevalent.

(c) The length of Class locations 2, 3, and 4 may be adjusted as follows:

(1) A Class 4 location ends 220 yards (200 meters) from the nearest building with four or more stories above ground.

(2) When a cluster of buildings intended for human occupancy requires a Class 2 or 3 location, the class location ends 220 yards (200 meters) from the nearest building in the cluster.

[Amdt. 192–78, 61 FR 28783, June 6, 1996; 61 FR 35139, July 5, 1996, as amended by Amdt. 192–85, 63 FR 37502, July 13, 1998]

§ 192.7 What documents are incorporated by reference partly or wholly in this part?

(a) Any documents or portions thereof incorporated by reference in this part are included in this part as though set out in full. When only a portion of a document is referenced, the remainder is not incorporated in this part.

(b) All incorporated materials are available for inspection in the Office of Pipeline Safety, Pipeline and Hazardous Materials Safety Administration, 1200 New Jersey Avenue, SE., Washington, DC, 20590–0001, 202–366–4595, or at the National Archives and Records Administration (NARA). For information on the availability of this material at NARA, call 202–741–6030 or go to: *http://www.archives.gov/*

federal_register/code_of_federal_regulations/ibr_locations.html. These materials have been approved for incorporation by reference by the Director of the Federal Register in accordance with 5 U.S.C. 552(a) and 1 CFR part 51. In addition, the incorporated materials are available from the respective organizations listed in paragraph (c) (1) of this section.

(c) The full titles of documents incorporated by reference, in whole or in part, are provided herein. The numbers in parentheses indicate applicable editions. For each incorporated document, citations of all affected sections are provided. Earlier editions of currently listed documents or editions of documents listed in previous editions of 49 CFR part 192 may be used for materials and components designed, manufactured, or installed in accordance with these earlier documents at the time they were listed. The user must refer to the appropriate previous edition of 49 CFR part 192 for a listing of the earlier listed editions or documents.

(1) *Incorporated by reference (IBR).*

List of Organizations and Addresses:

A. Pipeline Research Council International, Inc. (PRCI), c/o Technical Toolboxes, 3801 Kirby Drive, Suite 520, Houston, TX 77098.

B. American Petroleum Institute (API), 1220 L Street, NW., Washington, DC 20005.

C. American Society for Testing and Materials (ASTM), 100 Barr Harbor Drive, West Conshohocken, PA 19428.

D. ASME International (ASME), Three Park Avenue, New York, NY 10016–5990.

E. Manufacturers Standardization Society of the Valve and Fittings Industry, Inc. (MSS), 127 Park Street, NE., Vienna, VA 22180.

F. National Fire Protection Association (NFPA), 1 Batterymarch Park, P.O. Box 9101, Quincy, MA 02269–9101.

G. Plastics Pipe Institute, Inc. (PPI), 1825 Connecticut Avenue, NW., Suite 680, Washington, DC 20009.

H. NACE International (NACE), 1440 South Creek Drive, Houston, TX 77084.

I. Gas Technology Institute (GTI), 1700 South Mount Prospect Road, Des Plaines, IL 60018.

(2) *Documents incorporated by reference.*

Source and name of referenced material	49 CFR reference
A. Pipeline Research Council International (PRCI):	
(1) AGA Pipeline Research Committee, Project PR–3–805, ''A Modified Criterion for Evaluating the Remaining Strength of Corroded Pipe,'' (December 22, 1989). The RSTRENG program may be used for calculating remaining strength.	§§ 192.485(c);.192.933(a)(1); 192.933(d)(1)(i).
B. American Petroleum Institute (API):	
(1) ANSI/API Specification 5L/ISO 3183 ''Specification for Line Pipe'' (44th edition, 2007), includes errata (January 2009) and addendum (February 2009).	§§ 192.55(e); 192.112; 192.113; Item I, Appendix B to Part 192.
(2) API Recommended Practice 5L1 ''Recommended Practice for Railroad Transportation of Line Pipe,'' (6th Edition, July 2002).	§ 192.65(a)(1).
(3) API Recommended Practice 5LW, ''Transportation of Line Pipe on Barges and Marine Vessels'' (2nd edition, December 1996, effective March 1, 1997).	§ 192.65(b).
(4) ANSI/API Specification 6D, ''Specification for Pipeline Valves'' (23rd edition (April 2008, effective October 1, 2008) and errata 3 (includes 1 and 2, February 2009)).	§ 192.145(a).
(5) API Recommended Practice 80, ''Guidelines for the Definition of Onshore Gas Gathering Lines,'' (1st edition, April 2000).	§§ 192.8(a); 192.8(a)(1); 192.8(a)(2); 192.8(a)(3); 192.8(a)(4).
(6) API Standard 1104, ''Welding of Pipelines and Related Facilities'' (20th edition, October 2005, errata/addendum, (July 2007) and errata 2 (2008)).	§§ 192.225; 192.227(a); 192.229(c)(1); 192.241(c); Item II, Appendix B.
(7) API Recommended Practice 1162, ''Public Awareness Programs for Pipeline Operators,'' (1st edition, December 2003).	§§ 192.616(a); 192.616(b); 192.616(c).
(8) API Recommended Practice 1165 ''Recommended Practice 1165 ''Recommended Practice for Pipeline SCADA Displays,'' (API RP 1165) (First edition (January 2007)).	§ 192.631(c)(1).
C. American Society for Testing and Materials (ASTM):	
(1) ASTM A53/A53M–07, ''Standard Specification for Pipe, Steel, Black and Hot-Dipped, Zinc-Coated, Welded and Seamless'' (September 1, 2007).	§§ 192.113; Item I, Appendix B to Part 192.
(2) ASTM A106/A106M–08, ''Standard Specification for Seamless Carbon Steel Pipe for High-Temperature Service'' (July 15, 2008).	§§ 192.113; Item I, Appendix B to Part 192.

Source and name of referenced material	49 CFR reference
(3) ASTM A333/A333M–05 (2005) ''Standard Specification for Seamless and Welded Steel Pipe for Low-Temperature Service''.	§§ 192.113; Item I, Appendix B to Part 192.
(4) ASTM A372/A372M–03 (reapproved 2008), ''Standard Specification for Carbon and Alloy Steel Forgings for Thin-Walled Pressure Vessels'' (March 1, 2008).	§ 192.177(b)(1).
(5) ASTM A381–96 (reapproved 2005), ''Standard Specification for Metal-Arc Welded Steel Pipe for Use With High-Pressure Transmission Systems'' (October 1, 2005).	§§ 192.113; Item I, Appendix B to Part 192.
(6) ASTM A578/A578M–96 (re-approved 2001) ''Standard Specification for Straight-Beam Ultrasonic Examination of Plain and Clad Steel Plates for Special Applications.''.	§§ 192.112(c)(2)(iii).
(7) ASTM A671–06, ''Standard Specification for Electric-Fusion-Welded Steel Pipe for Atmospheric and Lower Temperatures'' (May 1, 2006).	§§ 192.113; Item I, Appendix B to Part 192.
(8) ASTM A672–08, ''Standard Specification for Electric-Fusion-Welded Steel Pipe for High-Pressure Service at Moderate Temperatures'' (May 1, 2008).	§§ 192.113; Item I, Appendix B to Part 192.
(9) ASTM A691–98 (reapproved 2007), ''Standard Specification for Carbon and Alloy Steel Pipe, Electric-Fusion-Welded for High-Pressure Service at High Temperatures'' (November 1, 2007).	§§ 192.113; Item I, Appendix B to Part 192.
(10) ASTM D638–03 ''Standard Test Method for Tensile Properties of Plastics.''.	§§ 192.283(a)(3); 192.283(b)(1).
(11) ASTM D2513–87 ''Standard Specification for Thermoplastic Gas Pressure Pipe, Tubing, and Fittings.''.	§ 192.63(a)(1).
(12) ASTM D2513–99 ''Standard Specification for Thermoplastic Gas Pressure Pipe, Tubing, and Fittings.''.	§§ 192.123(e)(2); 192.191(b); 192.281(b)(2); 192.283(a)(1)(i); Item 1, Appendix B to Part 192.
(13) ASTM D2517–00 ''Standard Specification for Reinforced Epoxy Resin Gas Pressure Pipe and Fittings.''.	§§ 192.191(a); 192.281(d)(1); 192.283(a)(1)(ii); Item I, Appendix B to Part 192.
(14) ASTM F1055–1998, ''Standard Specification for Electrofusion Type Polyethylene Fittings for Outside Diameter Controller Polyethylene Pipe and Tubing.''.	§ 192.283(a)(1)(iii).
D. ASME International (ASME):	
(1) ASME/ANSI B16.1–2005, ''Gray Iron Pipe Flanges and Flanged Fittings: (Classes 25, 125, and 250)'' (August 31, 2006).	§ 192.147(c).
(2) ASME/ANSI B16.5–2003, ''Pipe Flanges and Flanged Fittings.'' (October 2004).	§§ 192.147(a); 192.279.
(3) ASME/ANSI B31G–1991 (Reaffirmed, 2004), ''Manual for Determining the Remaining Strength of Corroded Pipelines.''.	§§ 192.485(c); 192.933(a).
(4) ASME/ANSI B31.8–2007, ''Gas Transmission and Distribution Piping Systems'' (November 30, 2007).	§ 192.619(a)(1)(i).
(5) ASME/ANSI B31.8S–2004, ''Supplement to B31.8 on Managing System Integrity of Gas Pipelines.''.	§§ 192.903(c); 192.907(b); 192.911 Introductory text; 192.911(i); 192.911(k); 192.911(l); 192.911(m); 192.913(a) Introductory text; 192.913(b)(1); 192.917(a) Introductory text; 192.917(b); 192.917(c); 192.917(e)(1); 192.917(e)(4); 192.921(a)(1); 192.923(b)(1); 192.923(b)(2); 192.923(b)(3); 192.925(b) Introductory text; 192.925(b)(1); 192.925(b)(2); 192.925(b)(3); 192.925(b)(4); 192.927(b); 192.927(c)(1)(i); 192.929(b)(1); 192.929(b)(2); 192.933(a); 192.933(d)(1); 192.933(d)(1)(i); 192.935(a); 192.935(b)(1)(iv); 192.937(c)(1); 192.939(a)(1)(i); 192.939(a)(1)(ii); 192.939(a)(3); 192.945(a).
(6) 2007 ASME Boiler & Pressure Vessel Code, Section I, ''Rules for Construction of Power Boilers 2007'' (2007 edition, July 1, 2007).	§ 192.153(b).
(7) 2007 ASME Boiler & Pressure Vessel Code, Section VIII, Division 1, ''Rules for Construction of Pressure Vessels 2'' (2007 edition, July 1, 2007).	§§ 192.153(a); 192.153(b); 192.153(d); 192.165(b)(3).
(8) 2007 ASME Boiler & Pressure Vessel Code, Section VIII, Division 2, ''Alternative Rules, Rules for Construction of Pressure Vessels'' (2007 edition, July 1, 2007).	§§ 192.153(b); 192.165(b)(3).
(9) 2007 ASME Boiler & Pressure Vessel Code, Section IX, ''Welding and Brazing Procedures, Welders, Brazers, and Welding and Brazing Operators'' (2007 edition, July 1, 2007).	§§ 192.227(a); Item II, Appendix B to Part 192.
E. Manufacturers Standardization Society of the Valve and Fittings Industry, Inc. (MSS):	
(1) MSS SP–44–2006, Standard Practice, ''Steel Pipeline Flanges'' (2006 edition).	§ 192.147(a).
(2) [Reserved].	
F. National Fire Protection Association (NFPA):	
(1) NFPA 30 (2008 edition, August 15, 2007), ''Flammable and Combustible Liquids Code'' (2008 edition; approved August 15, 2007).	§ 192.735(b).

Source and name of referenced material	49 CFR reference
(2) NFPA 58 (2004), ''Liquefied Petroleum Gas Code (LP-Gas Code).''.	§§ 192.11(a); 192.11(b); 192.11(c).
(3) NFPA 59 (2004), ''Utility LP-Gas Plant Code.''	§§ 192.11(a); 192.11(b); 192.11(c).
(4) NFPA 70 (2008), ''National Electrical Code'' (NEC 2008) (Approved August 15, 2007).	§§ 192.163(e); 192.189(c).
G. Plastics Pipe Institute, Inc. (PPI):	
(1) PPI TR–3/2008 HDB/HDS/PDB/SDB/MRS Policies (2008), ''Policies and Procedures for Developing Hydrostatic Design Basis (HDB), Pressure Design Basis (PDB), Strength Design Basis (SDB), and Minimum Required Strength (MRS) Ratings for Thermoplastic Piping Materials or Pipe'' (May 2008).	§ 192.121.
H. NACE International (NACE):	
(1) NACE Standard SP0502–2008, Standard Practice, ''Pipeline External Corrosion Direct Assessment Methodology'' (reaffirmed March 20, 2008).	§§ 192.923(b)(1); 192.925(b) Introductory text; 192.925(b)(1); 192.925(b)(1)(ii); 192.925(b)(2) Introductory text; 192.925(b)(3) Introductory text; 192.925(b)(3)(ii); 192.925(b)(3)(iv); 192.925(b)(4) Introductory text; 192.925(b)(4)(ii); 192.931(d); 192.935(b)(1)(iv); 192.939(a)(2).
I. Gas Technology Institute (GTI):	
(1) GRI 02/0057 (2002) ''Internal Corrosion Direct Assessment of Gas Transmission Pipelines Methodology.''.	§ 192.927(c)(2).

[35 FR 13257, Aug. 19, 1970]

EDITORIAL NOTE: For FEDERAL REGISTER citations affecting § 192.7, see the List of CFR Sections Affected, which appears in the Finding Aids section of the printed volume and at *www.fdsys.gov*.

§ 192.8 How are onshore gathering lines and regulated onshore gathering lines determined?

(a) An operator must use API RP 80 (incorporated by reference, see § 192.7), to determine if an onshore pipeline (or part of a connected series of pipelines) is an onshore gathering line. The determination is subject to the limitations listed below. After making this determination, an operator must determine if the onshore gathering line is a regulated onshore gathering line under paragraph (b) of this section.

(1) The beginning of gathering, under section 2.2(a)(1) of API RP 80, may not extend beyond the furthermost downstream point in a production operation as defined in section 2.3 of API RP 80. This furthermost downstream point does not include equipment that can be used in either production or transportation, such as separators or dehydrators, unless that equipment is involved in the processes of ''production and preparation for transportation or delivery of hydrocarbon gas'' within the meaning of ''production operation.''

(2) The endpoint of gathering, under section 2.2(a)(1)(A) of API RP 80, may not extend beyond the first downstream natural gas processing plant, unless the operator can demonstrate, using sound engineering principles, that gathering extends to a further downstream plant.

(3) If the endpoint of gathering, under section 2.2(a)(1)(C) of API RP 80, is determined by the commingling of gas from separate production fields, the fields may not be more than 50 miles from each other, unless the Administrator finds a longer separation distance is justified in a particular case (see 49 CFR § 190.9).

(4) The endpoint of gathering, under section 2.2(a)(1)(D) of API RP 80, may not extend beyond the furthermost downstream compressor used to increase gathering line pressure for delivery to another pipeline.

(b) For purposes of § 192.9, ''regulated onshore gathering line'' means:

(1) Each onshore gathering line (or segment of onshore gathering line) with a feature described in the second column that lies in an area described in the third column; and

(2) As applicable, additional lengths of line described in the fourth column to provide a safety buffer:

Type	Feature	Area	Safety buffer
A	—Metallic and the MAOP produces a hoop stress of 20 percent or more of SMYS. If the stress level is unknown, an operator must determine the stress level according to the applicable provisions in subpart C of this part. —Non-metallic and the MAOP is more than 125 psig (862 kPa).	Class 2, 3, or 4 location (*see* § 192.5)	None.
B	—Metallic and the MAOP produces a hoop stress of less than 20 percent of SMYS. If the stress level is unknown, an operator must determine the stress level according to the applicable provisions in subpart C of this part. —Non-metallic and the MAOP is 125 psig (862 kPa) or less.	*Area 1.* Class 3 or 4 location ..... *Area 2.* An area within a Class 2 location the operator determines by using any of the following three methods: (a) A Class 2 location. ..... (b) An area extending 150 feet (45.7 m) on each side of the centerline of any continuous 1 mile (1.6 km) of pipeline and including more than 10 but fewer than 46 dwellings. (c) An area extending 150 feet (45.7 m) on each side of the centerline of any continous 1000 feet (305 m) of pipeline and including 5 or more dwellings.	If the gathering line is in Area 2(b) or 2(c), the additional lengths of line extend upstream and downstream from the area to a point where the line is at least 150 feet (45.7 m) from the nearest dwelling in the area. However, if a cluster of dwellings in Area 2 (b) or 2(c) qualifies a line as Type B, the Type B classification ends 150 feet (45.7 m) from the nearest dwelling in the cluster.

[Amdt. 192–102, 71 FR 13302, Mar. 15, 2006]

§ 192.9 What requirements apply to gathering lines?

(a) *Requirements.* An operator of a gathering line must follow the safety requirements of this part as prescribed by this section.

(b) *Offshore lines.* An operator of an offshore gathering line must comply with requirements of this part applicable to transmission lines, except the requirements in § 192.150 and in subpart O of this part.

(c) *Type A lines.* An operator of a Type A regulated onshore gathering line must comply with the requirements of this part applicable to transmission lines, except the requirements in § 192.150 and in subpart O of this part. However, an operator of a Type A regulated onshore gathering line in a Class 2 location may demonstrate compliance with subpart N by describing the processes it uses to determine the qualification of persons performing operations and maintenance tasks.

(d) *Type B lines.* An operator of a Type B regulated onshore gathering line must comply with the following requirements:

(1) If a line is new, replaced, relocated, or otherwise changed, the design, installation, construction, initial inspection, and initial testing must be in accordance with requirements of this part applicable to transmission lines;

(2) If the pipeline is metallic, control corrosion according to requirements of subpart I of this part applicable to transmission lines;

(3) Carry out a damage prevention program under § 192.614;

(4) Establish a public education program under § 192.616;

(5) Establish the MAOP of the line under § 192.619; and

(6) Install and maintain line markers according to the requirements for transmission lines in § 192.707.

(e) *Compliance deadlines.* An operator of a regulated onshore gathering line must comply with the following deadlines, as applicable.

(1) An operator of a new, replaced, relocated, or otherwise changed line must be in compliance with the applicable requirements of this section by the date the line goes into service, unless an exception in § 192.13 applies.

(2) If a regulated onshore gathering line existing on April 14, 2006 was not previously subject to this part, an operator has until the date stated in the second column to comply with the applicable requirement for the line listed in the first column, unless the Administrator finds a later deadline is justified in a particular case:

Requirement	Compliance deadline
Control corrosion according to Subpart I requirements for transmission lines.	April 15, 2009.
Carry out a damage prevention program under § 192.614.	October 15, 2007.
Establish MAOP under § 192.619.	October 15, 2007.
Install and maintain line markers under § 192.707.	April 15, 2008.
Establish a public education program under § 192.616.	April 15, 2008.
Other provisions of this part as required by paragraph (c) of this section for Type A lines.	April 15, 2009.

(3) If, after April 14, 2006, a change in class location or increase in dwelling density causes an onshore gathering line to be a regulated onshore gathering line, the operator has 1 year for Type B lines and 2 years for Type A lines after the line becomes a regulated onshore gathering line to comply with this section.

[Amdt. 192–102, 71 FR 13301, Mar. 15, 2006]

§ 192.10 Outer continental shelf pipelines.

Operators of transportation pipelines on the Outer Continental Shelf (as defined in the Outer Continental Shelf Lands Act; 43 U.S.C. 1331) must identify on all their respective pipelines the specific points at which operating responsibility transfers to a producing operator. For those instances in which the transfer points are not identifiable by a durable marking, each operator will have until September 15, 1998 to identify the transfer points. If it is not practicable to durably mark a transfer point and the transfer point is located above water, the operator must depict the transfer point on a schematic located near the transfer point. If a transfer point is located subsea, then the operator must identify the transfer point on a schematic which must be maintained at the nearest upstream facility and provided to PHMSA upon request. For those cases in which adjoining operators have not agreed on a transfer point by September 15, 1998 the Regional Director and the MMS Regional Supervisor will make a joint determination of the transfer point.

[Amdt. 192–81, 62 FR 61695, Nov. 19, 1997, as amended at 70 FR 11139, Mar. 8, 2005]

§ 192.11 Petroleum gas systems.

(a) Each plant that supplies petroleum gas by pipeline to a natural gas distribution system must meet the requirements of this part and ANSI/NFPA 58 and 59.

(b) Each pipeline system subject to this part that transports only petroleum gas or petroleum gas/air mixtures must meet the requirements of this part and of ANSI/NFPA 58 and 59.

(c) In the event of a conflict between this part and ANSI/NFPA 58 and 59, ANSI/NFPA 58 and 59 prevail.

[Amdt. 192–78, 61 FR 28783, June 6, 1996]

§ 192.13 What general requirements apply to pipelines regulated under this part?

(a) No person may operate a segment of pipeline listed in the first column that is readied for service after the date in the second column, unless:

(1) The pipeline has been designed, installed, constructed, initially inspected, and initially tested in accordance with this part; or

(2) The pipeline qualifies for use under this part according to the requirements in § 192.14.

Pipeline	Date
Offshore gathering line	July 31, 1977.
Regulated onshore gathering line to which this part did not apply until April 14, 2006.	March 15 2007.
All other pipelines	March 12, 1971.

(b) No person may operate a segment of pipeline listed in the first column that is replaced, relocated, or otherwise changed after the date in the second column, unless the replacement, relocation or change has been made according to the requirements in this part.

Pipeline	Date
Offshore gathering line	July 31, 1977.
Regulated onshore gathering line to which this part did not apply until April 14, 2006.	March 15, 2007.
All other pipelines	November 12, 1970.

(c) Each operator shall maintain, modify as appropriate, and follow the

plans, procedures, and programs that it is required to establish under this part.

[35 FR 13257, Aug. 19, 1970, as amended by Amdt. 192–27, 41 FR 34605, Aug. 16, 1976; Amdt. 192–30, 42 FR 60148, Nov. 25, 1977; Amdt. 192–102, 71 FR 13303, Mar. 15, 2006]

§ 192.14 Conversion to service subject to this part.

(a) A steel pipeline previously used in service not subject to this part qualifies for use under this part if the operator prepares and follows a written procedure to carry out the following requirements:

(1) The design, construction, operation, and maintenance history of the pipeline must be reviewed and, where sufficient historical records are not available, appropriate tests must be performed to determine if the pipeline is in a satisfactory condition for safe operation.

(2) The pipeline right-of-way, all aboveground segments of the pipeline, and appropriately selected underground segments must be visually inspected for physical defects and operating conditions which reasonably could be expected to impair the strength or tightness of the pipeline.

(3) All known unsafe defects and conditions must be corrected in accordance with this part.

(4) The pipeline must be tested in accordance with subpart J of this part to substantiate the maximum allowable operating pressure permitted by subpart L of this part.

(b) Each operator must keep for the life of the pipeline a record of the investigations, tests, repairs, replacements, and alterations made under the requirements of paragraph (a) of this section.

[Amdt. 192–30, 42 FR 60148, Nov. 25, 1977]

§ 192.15 Rules of regulatory construction.

(a) As used in this part:

Includes means including but not limited to.

May means ''is permitted to'' or ''is authorized to''.

May not means ''is not permitted to'' or ''is not authorized to''.

Shall is used in the mandatory and imperative sense.

(b) In this part:

(1) Words importing the singular include the plural;

(2) Words importing the plural include the singular; and

(3) Words importing the masculine gender include the feminine.

§ 192.16 Customer notification.

(a) This section applies to each operator of a service line who does not maintain the customer's buried piping up to entry of the first building downstream, or, if the customer's buried piping does not enter a building, up to the principal gas utilization equipment or the first fence (or wall) that surrounds that equipment. For the purpose of this section, ''customer's buried piping'' does not include branch lines that serve yard lanterns, pool heaters, or other types of secondary equipment. Also, ''maintain'' means monitor for corrosion according to § 192.465 if the customer's buried piping is metallic, survey for leaks according to § 192.723, and if an unsafe condition is found, shut off the flow of gas, advise the customer of the need to repair the unsafe condition, or repair the unsafe condition.

(b) Each operator shall notify each customer once in writing of the following information:

(1) The operator does not maintain the customer's buried piping.

(2) If the customer's buried piping is not maintained, it may be subject to the potential hazards of corrosion and leakage.

(3) Buried gas piping should be—

(i) Periodically inspected for leaks;

(ii) Periodically inspected for corrosion if the piping is metallic; and

(iii) Repaired if any unsafe condition is discovered.

(4) When excavating near buried gas piping, the piping should be located in advance, and the excavation done by hand.

(5) The operator (if applicable), plumbing contractors, and heating contractors can assist in locating, inspecting, and repairing the customer's buried piping.

(c) Each operator shall notify each customer not later than August 14, 1996, or 90 days after the customer first receives gas at a particular location, whichever is later. However, operators

of master meter systems may continuously post a general notice in a prominent location frequented by customers.

(d) Each operator must make the following records available for inspection by the Administrator or a State agency participating under 49 U.S.C. 60105 or 60106:

(1) A copy of the notice currently in use; and

(2) Evidence that notices have been sent to customers within the previous 3 years.

[Amdt. 192–74, 60 FR 41828, Aug. 14, 1995, as amended by Amdt. 192–74A, 60 FR 63451, Dec. 11, 1995; Amdt. 192–83, 63 FR 7723, Feb. 17, 1998]

Subpart B—Materials

§ 192.51 Scope.

This subpart prescribes minimum requirements for the selection and qualification of pipe and components for use in pipelines.

§ 192.53 General.

Materials for pipe and components must be:

(a) Able to maintain the structural integrity of the pipeline under temperature and other environmental conditions that may be anticipated;

(b) Chemically compatible with any gas that they transport and with any other material in the pipeline with which they are in contact; and

(c) Qualified in accordance with the applicable requirements of this subpart.

§ 192.55 Steel pipe.

(a) New steel pipe is qualified for use under this part if:

(1) It was manufactured in accordance with a listed specification;

(2) It meets the requirements of—

(i) Section II of appendix B to this part; or

(ii) If it was manufactured before November 12, 1970, either section II or III of appendix B to this part; or

(3) It is used in accordance with paragraph (c) or (d) of this section.

(b) Used steel pipe is qualified for use under this part if:

(1) It was manufactured in accordance with a listed specification and it meets the requirements of paragraph II-C of appendix B to this part;

(2) It meets the requirements of:

(i) Section II of appendix B to this part; or

(ii) If it was manufactured before November 12, 1970, either section II or III of appendix B to this part;

(3) It has been used in an existing line of the same or higher pressure and meets the requirements of paragraph II-C of appendix B to this part; or

(4) It is used in accordance with paragraph (c) of this section.

(c) New or used steel pipe may be used at a pressure resulting in a hoop stress of less than 6,000 p.s.i. (41 MPa) where no close coiling or close bending is to be done, if visual examination indicates that the pipe is in good condition and that it is free of split seams and other defects that would cause leakage. If it is to be welded, steel pipe that has not been manufactured to a listed specification must also pass the weldability tests prescribed in paragraph II-B of appendix B to this part.

(d) Steel pipe that has not been previously used may be used as replacement pipe in a segment of pipeline if it has been manufactured prior to November 12, 1970, in accordance with the same specification as the pipe used in constructing that segment of pipeline.

(e) New steel pipe that has been cold expanded must comply with the mandatory provisions of API Specification 5L.

[35 FR 13257, Aug. 19, 1970, as amended by Amdt. 191–1, 35 FR 17660, Nov. 17, 1970; Amdt. 192–12, 38 FR 4761, Feb. 22, 1973; Amdt. 192–51, 51 FR 15335, Apr. 23, 1986; 58 FR 14521, Mar. 18, 1993; Amdt. 192–85, 63 FR 37502, July 13, 1998]

§ 192.57 [Reserved]

§ 192.59 Plastic pipe.

(a) New plastic pipe is qualified for use under this part if:

(1) It is manufactured in accordance with a listed specification; and

(2) It is resistant to chemicals with which contact may be anticipated.

(b) Used plastic pipe is qualified for use under this part if:

(1) It was manufactured in accordance with a listed specification;

(2) It is resistant to chemicals with which contact may be anticipated;

(3) It has been used only in natural gas service;

(4) Its dimensions are still within the tolerances of the specification to which it was manufactured; and

(5) It is free of visible defects.

(c) For the purpose of paragraphs (a)(1) and (b)(1) of this section, where pipe of a diameter included in a listed specification is impractical to use, pipe of a diameter between the sizes included in a listed specification may be used if it:

(1) Meets the strength and design criteria required of pipe included in that listed specification; and

(2) Is manufactured from plastic compounds which meet the criteria for material required of pipe included in that listed specification.

[35 FR 13257, Aug. 19, 1970, as amended by Amdt. 192–19, 40 FR 10472, Mar. 6, 1975; Amdt. 192–58, 53 FR 1635, Jan. 21, 1988]

§ 192.61 [Reserved]

§ 192.63 Marking of materials.

(a) Except as provided in paragraph (d) of this section, each valve, fitting, length of pipe, and other component must be marked—

(1) As prescribed in the specification or standard to which it was manufactured, except that thermoplastic fittings must be marked in accordance with ASTM D2513–87 (incorporated by reference, *see* § 192.7);

(2) To indicate size, material, manufacturer, pressure rating, and temperature rating, and as appropriate, type, grade, and model.

(b) Surfaces of pipe and components that are subject to stress from internal pressure may not be field die stamped.

(c) If any item is marked by die stamping, the die must have blunt or rounded edges that will minimize stress concentrations.

(d) Paragraph (a) of this section does not apply to items manufactured before November 12, 1970, that meet all of the following:

(1) The item is identifiable as to type, manufacturer, and model.

(2) Specifications or standards giving pressure, temperature, and other appropriate criteria for the use of items are readily available.

[Amdt. 192–1, 35 FR 17660, Nov. 17, 1970, as amended by Amdt. 192–31, 43 FR 883, Apr. 3, 1978; Amdt. 192–61, 53 FR 36793, Sept. 22, 1988; Amdt. 192–62, 54 FR 5627, Feb. 6, 1989; Amdt. 192–61A, 54 FR 32642, Aug. 9, 1989; 58 FR 14521, Mar. 18, 1993; Amdt. 192–76, 61 FR 26122, May 24, 1996; 61 FR 36826, July 15, 1996; Amdt. 192–114, 75 FR 48603, Aug. 11, 2010]

§ 192.65 Transportation of pipe.

(a) *Railroad.* In a pipeline to be operated at a hoop stress of 20 percent or more of SMYS, an operator may not use pipe having an outer diameter to wall thickness ratio of 70 to 1, or more, that is transported by railroad unless:

(1) The transportation is performed in accordance with API Recommended Practice 5L1 (incorporated by reference, *see* § 192.7).

(2) In the case of pipe transported before November 12, 1970, the pipe is tested in accordance with Subpart J of this Part to at least 1.25 times the maximum allowable operating pressure if it is to be installed in a class 1 location and to at least 1.5 times the maximum allowable operating pressure if it is to be installed in a class 2, 3, or 4 location. Notwithstanding any shorter time period permitted under Subpart J of this Part, the test pressure must be maintained for at least 8 hours.

(b) *Ship or barge.* In a pipeline to be operated at a hoop stress of 20 percent or more of SMYS, an operator may not use pipe having an outer diameter to wall thickness ratio of 70 to 1, or more, that is transported by ship or barge on both inland and marine waterways unless the transportation is performed in accordance with API Recommended Practice 5LW (incorporated by reference, *see* § 192.7).

[Amdt. 192–114, 75 FR 48603, Aug. 11, 2010]

Subpart C—Pipe Design

§ 192.101 Scope.

This subpart prescribes the minimum requirements for the design of pipe.

§ 192.103 General.

Pipe must be designed with sufficient wall thickness, or must be installed with adequate protection, to withstand anticipated external pressures and

loads that will be imposed on the pipe after installation.

§ 192.105 Design formula for steel pipe.

(a) The design pressure for steel pipe is determined in accordance with the following formula:

$P=(2\ St/D)\times F\times E\times T$

P=Design pressure in pounds per square inch (kPa) gauge.
S=Yield strength in pounds per square inch (kPa) determined in accordance with § 192.107.
D=Nominal outside diameter of the pipe in inches (millimeters).
t=Nominal wall thickness of the pipe in inches (millimeters). If this is unknown, it is determined in accordance with § 192.109. Additional wall thickness required for concurrent external loads in accordance with § 192.103 may not be included in computing design pressure.
F=Design factor determined in accordance with § 192.111.
E=Longitudinal joint factor determined in accordance with § 192.113.
T=Temperature derating factor determined in accordance with § 192.115.

(b) If steel pipe that has been subjected to cold expansion to meet the SMYS is subsequently heated, other than by welding or stress relieving as a part of welding, the design pressure is limited to 75 percent of the pressure determined under paragraph (a) of this section if the temperature of the pipe exceeds 900 °F (482 °C) at any time or is held above 600 °F (316 °C) for more than 1 hour.

[35 FR 13257, Aug. 19, 1970, as amended by Amdt. 192–47, 49 FR 7569, Mar. 1, 1984; Amdt. 192–85, 63 FR 37502, July 13, 1998]

§ 192.107 Yield strength (*S*) for steel pipe.

(a) For pipe that is manufactured in accordance with a specification listed in section I of appendix B of this part, the yield strength to be used in the design formula in § 192.105 is the SMYS stated in the listed specification, if that value is known.

(b) For pipe that is manufactured in accordance with a specification not listed in section I of appendix B to this part or whose specification or tensile properties are unknown, the yield strength to be used in the design formula in § 192.105 is one of the following:

(1) If the pipe is tensile tested in accordance with section II-D of appendix B to this part, the lower of the following:

(i) 80 percent of the average yield strength determined by the tensile tests.

(ii) The lowest yield strength determined by the tensile tests.

(2) If the pipe is not tensile tested as provided in paragraph (b)(1) of this section, 24,000 p.s.i. (165 MPa).

[35 FR 13257, Aug. 19, 1970, as amended by Amdt. 192–78, 61 FR 28783, June 6, 1996; Amdt. 192–83, 63 FR 7723, Feb. 17, 1998; Amdt. 192–85, 63 FR 37502, July 13, 1998]

§ 192.109 Nominal wall thickness (*t*) for steel pipe.

(a) If the nominal wall thickness for steel pipe is not known, it is determined by measuring the thickness of each piece of pipe at quarter points on one end.

(b) However, if the pipe is of uniform grade, size, and thickness and there are more than 10 lengths, only 10 percent of the individual lengths, but not less than 10 lengths, need be measured. The thickness of the lengths that are not measured must be verified by applying a gauge set to the minimum thickness found by the measurement. The nominal wall thickness to be used in the design formula in § 192.105 is the next wall thickness found in commercial specifications that is below the average of all the measurements taken. However, the nominal wall thickness used may not be more than 1.14 times the smallest measurement taken on pipe less than 20 inches (508 millimeters) in outside diameter, nor more than 1.11 times the smallest measurement taken on pipe 20 inches (508 millimeters) or more in outside diameter.

[35 FR 13257, Aug. 19, 1970, as amended by Amdt. 192–85, 63 FR 37502, July 13, 1998]

§ 192.111 Design factor (*F*) for steel pipe.

(a) Except as otherwise provided in paragraphs (b), (c), and (d) of this section, the design factor to be used in the design formula in § 192.105 is determined in accordance with the following table:

Class location	Design factor (*F*)
1	0.72
2	0.60
3	0.50
4	0.40

(b) A design factor of 0.60 or less must be used in the design formula in § 192.105 for steel pipe in Class 1 locations that:

(1) Crosses the right-of-way of an unimproved public road, without a casing;

(2) Crosses without a casing, or makes a parallel encroachment on, the right-of-way of either a hard surfaced road, a highway, a public street, or a railroad;

(3) Is supported by a vehicular, pedestrian, railroad, or pipeline bridge; or

(4) Is used in a fabricated assembly, (including separators, mainline valve assemblies, cross-connections, and river crossing headers) or is used within five pipe diameters in any direction from the last fitting of a fabricated assembly, other than a transition piece or an elbow used in place of a pipe bend which is not associated with a fabricated assembly.

(c) For Class 2 locations, a design factor of 0.50, or less, must be used in the design formula in § 192.105 for uncased steel pipe that crosses the right-of-way of a hard surfaced road, a highway, a public street, or a railroad.

(d) For Class 1 and Class 2 locations, a design factor of 0.50, or less, must be used in the design formula in § 192.105 for—

(1) Steel pipe in a compressor station, regulating station, or measuring station; and

(2) Steel pipe, including a pipe riser, on a platform located offshore or in inland navigable waters.

[35 FR 13257, Aug. 19, 1970, as amended by Amdt. 192–27, 41 FR 34605, Aug. 16, 1976]

§ 192.112 Additional design requirements for steel pipe using alternative maximum allowable operating pressure.

For a new or existing pipeline segment to be eligible for operation at the alternative maximum allowable operating pressure (MAOP) calculated under § 192.620, a segment must meet the following additional design requirements. Records for alternative MAOP must be maintained, for the useful life of the pipeline, demonstrating compliance with these requirements:

To address this design issue:	The pipeline segment must meet these additional requirements:
(a) General standards for the steel pipe.	(1) The plate, skelp, or coil used for the pipe must be micro-alloyed, fine grain, fully killed, continuously cast steel with calcium treatment.
	(2) The carbon equivalents of the steel used for pipe must not exceed 0.25 percent by weight, as calculated by the Ito-Bessyo formula (Pcm formula) or 0.43 percent by weight, as calculated by the International Institute of Welding (IIW) formula.
	(3) The ratio of the specified outside diameter of the pipe to the specified wall thickness must be less than 100. The wall thickness or other mitigative measures must prevent denting and ovality anomalies during construction, strength testing and anticipated operational stresses.
	(4) The pipe must be manufactured using API Specification 5L, product specification level 2 (incorporated by reference, see § 192.7) for maximum operating pressures and minimum and maximum operating temperatures and other requirements under this section.
(b) Fracture control	(1) The toughness properties for pipe must address the potential for initiation, propagation and arrest of fractures in accordance with:
	(i) API Specification 5L (incorporated by reference, see § 192.7); or
	(ii) American Society of Mechanical Engineers (ASME) B31.8 (incorporated by reference, see § 192.7); and
	(iii) Any correction factors needed to address pipe grades, pressures, temperatures, or gas compositions not expressly addressed in API Specification 5L, product specification level 2 or ASME B31.8 (incorporated by reference, see § 192.7).
	(2) Fracture control must:
	(i) Ensure resistance to fracture initiation while addressing the full range of operating temperatures, pressures, gas compositions, pipe grade and operating stress levels, including maximum pressures and minimum temperatures for shut-in conditions, that the pipeline is expected to experience. If these parameters change during operation of the pipeline such that they are outside the bounds of what was considered in the design evaluation, the evaluation must be reviewed and updated to assure continued resistance to fracture initiation over the operating life of the pipeline;
	(ii) Address adjustments to toughness of pipe for each grade used and the decompression behavior of the gas at operating parameters;
	(iii) Ensure at least 99 percent probability of fracture arrest within eight pipe lengths with a probability of not less than 90 percent within five pipe lengths; and

To address this design issue:	The pipeline segment must meet these additional requirements:
	(iv) Include fracture toughness testing that is equivalent to that described in supplementary requirements SR5A, SR5B, and SR6 of API Specification 5L (incorporated by reference, see § 192.7) and ensures ductile fracture and arrest with the following exceptions:
	(A) The results of the Charpy impact test prescribed in SR5A must indicate at least 80 percent minimum shear area for any single test on each heat of steel; and
	(B) The results of the drop weight test prescribed in SR6 must indicate 80 percent average shear area with a minimum single test result of 60 percent shear area for any steel test samples. The test results must ensure a ductile fracture and arrest.
	(3) If it is not physically possible to achieve the pipeline toughness properties of paragraphs (b)(1) and (2) of this section, additional design features, such as mechanical or composite crack arrestors and/or heavier walled pipe of proper design and spacing, must be used to ensure fracture arrest as described in paragraph (b)(2)(iii) of this section.
(c) Plate/coil quality control	(1) There must be an internal quality management program at all mills involved in producing steel, plate, coil, skelp, and/or rolling pipe to be operated at alternative MAOP. These programs must be structured to eliminate or detect defects and inclusions affecting pipe quality.
	(2) A mill inspection program or internal quality management program must include (i) and either (ii) or (iii):
	(i) An ultrasonic test of the ends and at least 35 percent of the surface of the plate/coil or pipe to identify imperfections that impair serviceability such as laminations, cracks, and inclusions. At least 95 percent of the lengths of pipe manufactured must be tested. For all pipelines designed after December 22, 2008, the test must be done in accordance with ASTM A578/A578M Level B, or API 5L Paragraph 7.8.10 (incorporated by reference, see § 192.7) or equivalent method, and either
	(ii) A macro etch test or other equivalent method to identify inclusions that may form centerline segregation during the continuous casting process. Use of sulfur prints is not an equivalent method. The test must be carried out on the first or second slab of each sequence graded with an acceptance criteria of one or two on the Mannesmann scale or equivalent; or
	(iii) A quality assurance monitoring program implemented by the operator that includes audits of: (a) all steelmaking and casting facilities, (b) quality control plans and manufacturing procedure specifications, (c) equipment maintenance and records of conformance, (d) applicable casting superheat and speeds, and (e) centerline segregation monitoring records to ensure mitigation of centerline segregation during the continuous casting process.
(d) Seam quality control	(1) There must be a quality assurance program for pipe seam welds to assure tensile strength provided in API Specification 5L (incorporated by reference, see § 192.7) for appropriate grades.
	(2) There must be a hardness test, using Vickers (Hv10) hardness test method or equivalent test method, to assure a maximum hardness of 280 Vickers of the following:
	(i) A cross section of the weld seam of one pipe from each heat plus one pipe from each welding line per day; and
	(ii) For each sample cross section, a minimum of 13 readings (three for each heat affected zone, three in the weld metal, and two in each section of pipe base metal).
	(3) All of the seams must be ultrasonically tested after cold expansion and mill hydrostatic testing.
(e) Mill hydrostatic test	(1) All pipe to be used in a new pipeline segment must be hydrostatically tested at the mill at a test pressure corresponding to a hoop stress of 95 percent SMYS for 10 seconds. The test pressure may include a combination of internal test pressure and the allowance for end loading stresses imposed by the pipe mill hydrostatic testing equipment as allowed by API Specification 5L, Appendix K (incorporated by reference, see § 192.7).
	(2) Pipe in operation prior to December 22, 2008, must have been hydrostatically tested at the mill at a test pressure corresponding to a hoop stress of 90 percent SMYS for 10 seconds.
(f) Coating	(1) The pipe must be protected against external corrosion by a non-shielding coating.
	(2) Coating on pipe used for trenchless installation must be non-shielding and resist abrasions and other damage possible during installation.
	(3) A quality assurance inspection and testing program for the coating must cover the surface quality of the bare pipe, surface cleanliness and chlorides, blast cleaning, application temperature control, adhesion, cathodic disbondment, moisture permeation, bending, coating thickness, holiday detection, and repair.
(g) Fittings and flanges	(1) There must be certification records of flanges, factory induction bends and factory weld ells. Certification must address material properties such as chemistry, minimum yield strength and minimum wall thickness to meet design conditions.
	(2) If the carbon equivalents of flanges, bends and ells are greater than 0.42 percent by weight, the qualified welding procedures must include a pre-heat procedure.
	(3) Valves, flanges and fittings must be rated based upon the required specification rating class for the alternative MAOP.
(h) Compressor stations	(1) A compressor station must be designed to limit the temperature of the nearest downstream segment operating at alternative MAOP to a maximum of 120 degrees Fahrenheit (49 degrees Celsius) or the higher temperature allowed in paragraph (h)(2) of this section unless a long-term coating integrity monitoring program is implemented in accordance with paragraph (h)(3) of this section.

To address this design issue:	The pipeline segment must meet these additional requirements:
	(2) If research, testing and field monitoring tests demonstrate that the coating type being used will withstand a higher temperature in long-term operations, the compressor station may be designed to limit downstream piping to that higher temperature. Test results and acceptance criteria addressing coating adhesion, cathodic disbondment, and coating condition must be provided to each PHMSA pipeline safety regional office where the pipeline is in service at least 60 days prior to operating above 120 degrees Fahrenheit (49 degrees Celsius). An operator must also notify a State pipeline safety authority when the pipeline is located in a State where PHMSA has an interstate agent agreement, or an intrastate pipeline is regulated by that State. (3) Pipeline segments operating at alternative MAOP may operate at temperatures above 120 degrees Fahrenheit (49 degrees Celsius) if the operator implements a long-term coating integrity monitoring program. The monitoring program must include examinations using direct current voltage gradient (DCVG), alternating current voltage gradient (ACVG), or an equivalent method of monitoring coating integrity. An operator must specify the periodicity at which these examinations occur and criteria for repairing identified indications. An operator must submit its long-term coating integrity monitoring program to each PHMSA pipeline safety regional office in which the pipeline is located for review before the pipeline segments may be operated at temperatures in excess of 120 degrees Fahrenheit (49 degrees Celsius). An operator must also notify a State pipeline safety authority when the pipeline is located in a State where PHMSA has an interstate agent agreement, or an intrastate pipeline is regulated by that State.

[73 FR 62175, Oct. 17, 2008, as amended by Amdt. 192–111, 74 FR 62505, Nov. 30, 2009]

§ 192.113 Longitudinal joint factor (*E*) for steel pipe.

The longitudinal joint factor to be used in the design formula in § 192.105 is determined in accordance with the following table:

Specification	Pipe class	Longitudinal joint factor (E)
ASTM A 53/A53M	Seamless	1.00
	Electric resistance welded	1.00
	Furnace butt welded	.60
ASTM A 106	Seamless	1.00
ASTM A 333/A 333M	Seamless	1.00
	Electric resistance welded	1.00
ASTM A 381	Double submerged arc welded	1.00
ASTM A 671	Electric-fusion-welded	1.00
ASTM A 672	Electric-fusion-welded	1.00
ASTM A 691	Electric-fusion-welded	1.00
API 5 L	Seamless	1.00
	Electric resistance welded	1.00
	Electric flash welded	1.00
	Submerged arc welded	1.00
	Furnace butt welded	.60
Other	Pipe over 4 inches (102 millimeters)	.80
Other	Pipe 4 inches (102 millimeters) or less	.60

If the type of longitudinal joint cannot be determined, the joint factor to be used must not exceed that designated for ''Other.''

[Amdt. 192–37, 46 FR 10159, Feb. 2, 1981, as amended by Amdt. 192–51, 51 FR 15335, Apr. 23, 1986; Amdt. 192–62, 54 FR 5627, Feb. 6, 1989; 58 FR 14521, Mar. 18, 1993; Amdt. 192–85, 63 FR 37502, July 13, 1998; Amdt. 192–94, 69 FR 32894, June 14, 2004]

§ 192.115 Temperature derating factor (*T*) for steel pipe.

The temperature derating factor to be used in the design formula in § 192.105 is determined as follows:

Gas temperature in degrees Fahrenheit (Celsius)	Temperature derating factor (T)
250 °F (121 °C) or less	1.000
300 °F (149 °C)	0.967
350 °F (177 °C)	0.933
400 °F (204 °C)	0.900
450 °F (232 °C)	0.867

For intermediate gas temperatures, the derating factor is determined by interpolation.

[35 FR 13257, Aug. 19, 1970, as amended by Amdt. 192–85, 63 FR 37502, July 13, 1998]

§ 192.117 [Reserved]

§ 192.119 [Reserved]

§ 192.121 Design of plastic pipe.

Subject to the limitations of § 192.123, the design pressure for plastic pipe is determined by either of the following formulas:

$$P = 2S\frac{t}{(D-t)}(DF)$$

$$P = \frac{2S}{(SDR-1)}(DF)$$

Where:

P = Design pressure, gauge, psig (kPa).

S = For thermoplastic pipe, the HDB is determined in accordance with the listed specification at a temperature equal to 73 °F (23 °C), 100 °F (38 °C), 120 °F (49 °C), or 140 °F (60 °C). In the absence of an HDB established at the specified temperature, the HDB of a higher temperature may be used in determining a design pressure rating at the specified temperature by arithmetic interpolation using the procedure in Part D.2 of PPI TR–3/2008, *HDB/PDB/SDB/MRS Policies* (incorporated by reference, *see* § 192.7). For reinforced thermosetting plastic pipe, 11,000 psig (75,842 kPa). [Note: Arithmetic interpolation is not allowed for PA–11 pipe.]

t = Specified wall thickness, inches (mm).

D = Specified outside diameter, inches (mm).

SDR = Standard dimension ratio, the ratio of the average specified outside diameter to the minimum specified wall thickness, corresponding to a value from a common numbering system that was derived from the American National Standards Institute preferred number series 10.

D F = 0.32 or

= 0.40 for PA–11 pipe produced after January 23, 2009 with a nominal pipe size (IPS or CTS) 4-inch or less, and a SDR of 11 or greater (i.e. thicker pipe wall).

[Amdt. 192–111, 74 FR 62505, Nov. 30, 2009, as amended by Amdt. 192–114, 75 FR 48603, Aug. 11, 2010]

§ 192.123 Design limitations for plastic pipe.

(a) Except as provided in paragraph (e) and paragraph (f) of this section, the design pressure may not exceed a gauge pressure of 100 psig (689 kPa) for plastic pipe used in:

(1) Distribution systems; or

(2) Classes 3 and 4 locations.

(b) Plastic pipe may not be used where operating temperatures of the pipe will be:

(1) Below −20 °F (−20 °C), or −40 °F (−40 °C) if all pipe and pipeline components whose operating temperature will be below −29 °C (−20 °F) have a temperature rating by the manufacturer consistent with that operating temperature; or

(2) Above the following applicable temperatures:

(i) For thermoplastic pipe, the temperature at which the HDB used in the design formula under § 192.121 is determined.

(ii) For reinforced thermosetting plastic pipe, 150 °F (66 °C).

(c) The wall thickness for thermoplastic pipe may not be less than 0.062 inches (1.57 millimeters).

(d) The wall thickness for reinforced thermosetting plastic pipe may not be less than that listed in the following table:

Nominal size in inches (millimeters).	Minimum wall thickness inches (millimeters).
2 (51)	0.060 (1.52)
3 (76)	0.060 (1.52)
4 (102)	0.070 (1.78)
6 (152)	0.100 (2.54)

(e) The design pressure for thermoplastic pipe produced after July 14, 2004 may exceed a gauge pressure of 100 psig (689 kPa) provided that:

(1) The design pressure does not exceed 125 psig (862 kPa);

(2) The material is a PE2406 or a PE3408 as specified within ASTM D2513–99 (incorporated by reference, *see* § 192.7);

(3) The pipe size is nominal pipe size (IPS) 12 or less; and

(4) The design pressure is determined in accordance with the design equation defined in § 192.121.

(f) The design pressure for polyamide-11 (PA–11) pipe produced after January 23, 2009 may exceed a gauge pressure of 100 psig (689 kPa) provided that:

(1) The design pressure does not exceed 200 psig (1379 kPa);

(2) The pipe size is nominal pipe size (IPS or CTS) 4-inch or less; and

(3) The pipe has a standard dimension ratio of SDR–11 or greater (*i.e.*, thicker pipe wall).

[35 FR 13257, Aug. 19, 1970, as amended by Amdt. 192–31, 43 FR 13883, Apr. 3, 1978; Amdt. 192–78, 61 FR 28783, June 6, 1996; Amdt. 192–85, 63 FR 37502, July 13, 1998; Amdt. 192–93, 68 FR 53900, Sept. 15, 2003; 69 FR 32894, June 14, 2004; Amdt. 192–94, 69 FR 54592, Sept. 9, 2004; Amdt. 192–103, 71 FR 33407, June 9, 2006; 73 FR 79005, Dec. 24, 2008; Amdt. 192–114, 75 FR 48603, Aug. 11, 2010]

§ 192.125 Design of copper pipe.

(a) Copper pipe used in mains must have a minimum wall thickness of 0.065 inches (1.65 millimeters) and must be hard drawn.

(b) Copper pipe used in service lines must have wall thickness not less than that indicated in the following table:

Standard size inch (millimeter)	Nominal O.D. inch (millimeter)	Wall thickness inch (millimeter)	
		Nominal	Tolerance
½ (13)	.625 (16)	.040 (1.06)	.0035 (.0889)
⅝ (16)	.750 (19)	.042 (1.07)	.0035 (.0889)
¾ (19)	.875 (22)	.045 (1.14)	.004 (.102)
1 (25)	1.125 (29)	.050 (1.27)	.004 (.102)
1¼ (32)	1.375 (35)	.055 (1.40)	.0045 (.1143)
1½ (38)	1.625 (41)	.060 (1.52)	.0045 (.1143)

(c) Copper pipe used in mains and service lines may not be used at pressures in excess of 100 p.s.i. (689 kPa) gage.

(d) Copper pipe that does not have an internal corrosion resistant lining may not be used to carry gas that has an average hydrogen sulfide content of more than 0.3 grains/100 ft^3 (6.9/m^3) under standard conditions. Standard conditions refers to 60 °F and 14.7 psia (15.6 °C and one atmosphere) of gas.

[35 FR 13257, Aug. 19, 1970, as amended by Amdt. 192–62, 54 FR 5628, Feb. 6, 1989; Amdt. 192–85, 63 FR 37502, July 13, 1998]

Subpart D—Design of Pipeline Components

§ 192.141 Scope.

This subpart prescribes minimum requirements for the design and installation of pipeline components and facilities. In addition, it prescribes requirements relating to protection against accidental overpressuring.

§ 192.143 General requirements.

(a) Each component of a pipeline must be able to withstand operating pressures and other anticipated loadings without impairment of its serviceability with unit stresses equivalent to those allowed for comparable material in pipe in the same location and kind of service. However, if design based upon unit stresses is impractical for a particular component, design may be based upon a pressure rating established by the manufacturer by pressure testing that component or a prototype of the component.

(b) The design and installation of pipeline components and facilities must meet applicable requirements for corrosion control found in subpart I of this part.

[Amdt. 48, 49 FR 19824, May 10, 1984 as amended at 72 FR 20059, Apr. 23, 2007]

§ 192.144 Qualifying metallic components.

Notwithstanding any requirement of this subpart which incorporates by reference an edition of a document listed in § 192.7 or Appendix B of this part, a metallic component manufactured in accordance with any other edition of that document is qualified for use under this part if—

(a) It can be shown through visual inspection of the cleaned component that

no defect exists which might impair the strength or tightness of the component; and

(b) The edition of the document under which the component was manufactured has equal or more stringent requirements for the following as an edition of that document currently or previously listed in § 192.7 or appendix B of this part:

(1) Pressure testing;

(2) Materials; and

(3) Pressure and temperature ratings.

[Amdt. 192–45, 48 FR 30639, July 5, 1983, as amended by Amdt. 192–94, 69 FR 32894, June 14, 2004]

§ 192.145 Valves.

(a) Except for cast iron and plastic valves, each valve must meet the minimum requirements of API 6D (incorporated by reference, *see* § 192.7), or to a national or international standard that provides an equivalent performance level. A valve may not be used under operating conditions that exceed the applicable pressure-temperature ratings contained in those requirements.

(b) Each cast iron and plastic valve must comply with the following:

(1) The valve must have a maximum service pressure rating for temperatures that equal or exceed the maximum service temperature.

(2) The valve must be tested as part of the manufacturing, as follows:

(i) With the valve in the fully open position, the shell must be tested with no leakage to a pressure at least 1.5 times the maximum service rating.

(ii) After the shell test, the seat must be tested to a pressure not less than 1.5 times the maximum service pressure rating. Except for swing check valves, test pressure during the seat test must be applied successively on each side of the closed valve with the opposite side open. No visible leakage is permitted.

(iii) After the last pressure test is completed, the valve must be operated through its full travel to demonstrate freedom from interference.

(c) Each valve must be able to meet the anticipated operating conditions.

(d) No valve having shell (body, bonnet, cover, and/or end flange) components made of ductile iron may be used at pressures exceeding 80 percent of the pressure ratings for comparable steel valves at their listed temperature. However, a valve having shell components made of ductile iron may be used at pressures up to 80 percent of the pressure ratings for comparable steel valves at their listed temperature, if:

(1) The temperature-adjusted service pressure does not exceed 1,000 p.s.i. (7 Mpa) gage; and

(2) Welding is not used on any ductile iron component in the fabrication of the valve shells or their assembly.

(e) No valve having shell (body, bonnet, cover, and/or end flange) components made of cast iron, malleable iron, or ductile iron may be used in the gas pipe components of compressor stations.

[35 FR 13257, Aug. 19, 1970, as amended by Amdt. 192–62, 54 FR 5628, Feb. 6, 1989; Amdt. 192–85, 63 FR 37502, July 13, 1998; Amdt. 192–94, 69 FR 32894, June 14, 2004; Amdt. 192–114, 75 FR 48603, Aug. 11, 2010]

§ 192.147 Flanges and flange accessories.

(a) Each flange or flange accessory (other than cast iron) must meet the minimum requirements of ASME/ANSI B16.5, MSS SP–44, or the equivalent.

(b) Each flange assembly must be able to withstand the maximum pressure at which the pipeline is to be operated and to maintain its physical and chemical properties at any temperature to which it is anticipated that it might be subjected in service.

(c) Each flange on a flanged joint in cast iron pipe must conform in dimensions, drilling, face and gasket design to ASME/ANSI B16.1 and be cast integrally with the pipe, valve, or fitting.

[35 FR 13257, Aug. 19, 1970, as amended by Amdt. 192–62, 54 FR 5628, Feb. 6, 1989; 58 FR 14521, Mar. 18, 1993]

§ 192.149 Standard fittings.

(a) The minimum metal thickness of threaded fittings may not be less than specified for the pressures and temperatures in the applicable standards referenced in this part, or their equivalent.

(b) Each steel butt-welding fitting must have pressure and temperature ratings based on stresses for pipe of the same or equivalent material. The actual bursting strength of the fitting must at least equal the computed

bursting strength of pipe of the designated material and wall thickness, as determined by a prototype that was tested to at least the pressure required for the pipeline to which it is being added.

§ 192.150 Passage of internal inspection devices.

(a) Except as provided in paragraphs (b) and (c) of this section, each new transmission line and each replacement of line pipe, valve, fitting, or other line component in a transmission line must be designed and constructed to accommodate the passage of instrumented internal inspection devices.

(b) This section does not apply to: (1) Manifolds;

(2) Station piping such as at compressor stations, meter stations, or regulator stations;

(3) Piping associated with storage facilities, other than a continuous run of transmission line between a compressor station and storage facilities;

(4) Cross-overs;

(5) Sizes of pipe for which an instrumented internal inspection device is not commercially available;

(6) Transmission lines, operated in conjunction with a distribution system which are installed in Class 4 locations;

(7) Offshore transmission lines, except transmission lines 10¾ inches (273 millimeters) or more in outside diameter on which construction begins after December 28, 2005, that run from platform to platform or platform to shore unless—

(i) Platform space or configuration is incompatible with launching or retrieving instrumented internal inspection devices; or

(ii) If the design includes taps for lateral connections, the operator can demonstrate, based on investigation or experience, that there is no reasonably practical alternative under the design circumstances to the use of a tap that will obstruct the passage of instrumented internal inspection devices; and

(8) Other piping that, under § 190.9 of this chapter, the Administrator finds in a particular case would be impracticable to design and construct to accommodate the passage of instrumented internal inspection devices.

(c) An operator encountering emergencies, construction time constraints or other unforeseen construction problems need not construct a new or replacement segment of a transmission line to meet paragraph (a) of this section, if the operator determines and documents why an impracticability prohibits compliance with paragraph (a) of this section. Within 30 days after discovering the emergency or construction problem the operator must petition, under § 190.9 of this chapter, for approval that design and construction to accommodate passage of instrumented internal inspection devices would be impracticable. If the petition is denied, within 1 year after the date of the notice of the denial, the operator must modify that segment to allow passage of instrumented internal inspection devices.

[Amdt. 192–72, 59 FR 17281, Apr. 12, 1994, as amended by Amdt. 192–85, 63 FR 37502, July 13, 1998; Amdt. 192–97, 69 FR 36029, June 28, 2004]

§ 192.151 Tapping.

(a) Each mechanical fitting used to make a hot tap must be designed for at least the operating pressure of the pipeline.

(b) Where a ductile iron pipe is tapped, the extent of full-thread engagement and the need for the use of outside-sealing service connections, tapping saddles, or other fixtures must be determined by service conditions.

(c) Where a threaded tap is made in cast iron or ductile iron pipe, the diameter of the tapped hole may not be more than 25 percent of the nominal diameter of the pipe unless the pipe is reinforced, except that

(1) Existing taps may be used for replacement service, if they are free of cracks and have good threads; and

(2) A 1¼-inch (32 millimeters) tap may be made in a 4-inch (102 millimeters) cast iron or ductile iron pipe, without reinforcement.

However, in areas where climate, soil, and service conditions may create unusual external stresses on cast iron pipe, unreinforced taps may be used only on 6-inch (152 millimeters) or larger pipe.

[35 FR 13257, Aug. 19, 1970, as amended by Amdt. 192–85, 63 FR 37502, July 13, 1998]

§ 192.153 Components fabricated by welding.

(a) Except for branch connections and assemblies of standard pipe and fittings joined by circumferential welds, the design pressure of each component fabricated by welding, whose strength cannot be determined, must be established in accordance with paragraph UG–101 of section VIII, Division 1, of the ASME Boiler and Pressure Vessel Code.

(b) Each prefabricated unit that uses plate and longitudinal seams must be designed, constructed, and tested in accordance with section I, section VIII, Division 1, or section VIII, Division 2 of the ASME Boiler and Pressure Vessel Code, except for the following:

(1) Regularly manufactured butt-welding fittings.

(2) Pipe that has been produced and tested under a specification listed in appendix B to this part.

(3) Partial assemblies such as split rings or collars.

(4) Prefabricated units that the manufacturer certifies have been tested to at least twice the maximum pressure to which they will be subjected under the anticipated operating conditions.

(c) Orange-peel bull plugs and orange-peel swages may not be used on pipelines that are to operate at a hoop stress of 20 percent or more of the SMYS of the pipe.

(d) Except for flat closures designed in accordance with section VIII of the ASME Boiler and Pressure Code, flat closures and fish tails may not be used on pipe that either operates at 100 p.s.i. (689 kPa) gage, or more, or is more than 3 inches (76 millimeters) nominal diameter.

[35 FR 13257, Aug. 19, 1970, as amended by Amdt. 192–1, 35 FR 17660, Nov. 17, 1970; 58 FR 14521, Mar. 18, 1993; Amdt. 192–68, 58 FR 45268, Aug. 27, 1993; Amdt. 192–85, 63 FR 37502, July 13, 1998]

§ 192.155 Welded branch connections.

Each welded branch connection made to pipe in the form of a single connection, or in a header or manifold as a series of connections, must be designed to ensure that the strength of the pipeline system is not reduced, taking into account the stresses in the remaining pipe wall due to the opening in the pipe or header, the shear stresses produced by the pressure acting on the area of the branch opening, and any external loadings due to thermal movement, weight, and vibration.

§ 192.157 Extruded outlets.

Each extruded outlet must be suitable for anticipated service conditions and must be at least equal to the design strength of the pipe and other fittings in the pipeline to which it is attached.

§ 192.159 Flexibility.

Each pipeline must be designed with enough flexibility to prevent thermal expansion or contraction from causing excessive stresses in the pipe or components, excessive bending or unusual loads at joints, or undesirable forces or moments at points of connection to equipment, or at anchorage or guide points.

§ 192.161 Supports and anchors.

(a) Each pipeline and its associated equipment must have enough anchors or supports to:

(1) Prevent undue strain on connected equipment;

(2) Resist longitudinal forces caused by a bend or offset in the pipe; and

(3) Prevent or damp out excessive vibration.

(b) Each exposed pipeline must have enough supports or anchors to protect the exposed pipe joints from the maximum end force caused by internal pressure and any additional forces caused by temperature expansion or contraction or by the weight of the pipe and its contents.

(c) Each support or anchor on an exposed pipeline must be made of durable, noncombustible material and must be designed and installed as follows:

(1) Free expansion and contraction of the pipeline between supports or anchors may not be restricted.

(2) Provision must be made for the service conditions involved.

(3) Movement of the pipeline may not cause disengagement of the support equipment.

(d) Each support on an exposed pipeline operated at a stress level of 50 percent or more of SMYS must comply with the following:

(1) A structural support may not be welded directly to the pipe.

(2) The support must be provided by a member that completely encircles the pipe.

(3) If an encircling member is welded to a pipe, the weld must be continuous and cover the entire circumference.

(e) Each underground pipeline that is connected to a relatively unyielding line or other fixed object must have enough flexibility to provide for possible movement, or it must have an anchor that will limit the movement of the pipeline.

(f) Except for offshore pipelines, each underground pipeline that is being connected to new branches must have a firm foundation for both the header and the branch to prevent detrimental lateral and vertical movement.

[35 FR 13257, Aug. 19, 1970, as amended by Amdt. 192–58, 53 FR 1635, Jan. 21, 1988]

§ 192.163 Compressor stations: Design and construction.

(a) *Location of compressor building*. Except for a compressor building on a platform located offshore or in inland navigable waters, each main compressor building of a compressor station must be located on property under the control of the operator. It must be far enough away from adjacent property, not under control of the operator, to minimize the possibility of fire being communicated to the compressor building from structures on adjacent property. There must be enough open space around the main compressor building to allow the free movement of fire-fighting equipment.

(b) *Building construction*. Each building on a compressor station site must be made of noncombustible materials if it contains either—

(1) Pipe more than 2 inches (51 millimeters) in diameter that is carrying gas under pressure; or

(2) Gas handling equipment other than gas utilization equipment used for domestic purposes.

(c) *Exits*. Each operating floor of a main compressor building must have at least two separated and unobstructed exits located so as to provide a convenient possibility of escape and an unobstructed passage to a place of safety. Each door latch on an exit must be of a type which can be readily opened from the inside without a key. Each swinging door located in an exterior wall must be mounted to swing outward.

(d) *Fenced areas*. Each fence around a compressor station must have at least two gates located so as to provide a convenient opportunity for escape to a place of safety, or have other facilities affording a similarly convenient exit from the area. Each gate located within 200 feet (61 meters) of any compressor plant building must open outward and, when occupied, must be openable from the inside without a key.

(e) *Electrical facilities*. Electrical equipment and wiring installed in compressor stations must conform to the National Electrical Code, ANSI/NFPA 70, so far as that code is applicable.

[35 FR 13257, Aug. 19, 1970, as amended by Amdt. 192–27, 41 FR 34605, Aug. 16, 1976; Amdt. 192–37, 46 FR 10159, Feb. 2, 1981; 58 FR 14521, Mar. 18, 1993; Amdt. 192–85, 63 FR 37502, 37503, July 13, 1998]

§ 192.165 Compressor stations: Liquid removal.

(a) Where entrained vapors in gas may liquefy under the anticipated pressure and temperature conditions, the compressor must be protected against the introduction of those liquids in quantities that could cause damage.

(b) Each liquid separator used to remove entrained liquids at a compressor station must:

(1) Have a manually operable means of removing these liquids.

(2) Where slugs of liquid could be carried into the compressors, have either automatic liquid removal facilities, an automatic compressor shutdown device, or a high liquid level alarm; and

(3) Be manufactured in accordance with section VIII of the ASME Boiler and Pressure Vessel Code, except that liquid separators constructed of pipe and fittings without internal welding must be fabricated with a design factor of 0.4, or less.

§ 192.167 Compressor stations: Emergency shutdown.

(a) Except for unattended field compressor stations of 1,000 horsepower (746

kilowatts) or less, each compressor station must have an emergency shutdown system that meets the following:

(1) It must be able to block gas out of the station and blow down the station piping.

(2) It must discharge gas from the blowdown piping at a location where the gas will not create a hazard.

(3) It must provide means for the shutdown of gas compressing equipment, gas fires, and electrical facilities in the vicinity of gas headers and in the compressor building, except that:

(i) Electrical circuits that supply emergency lighting required to assist station personnel in evacuating the compressor building and the area in the vicinity of the gas headers must remain energized; and

(ii) Electrical circuits needed to protect equipment from damage may remain energized.

(4) It must be operable from at least two locations, each of which is:

(i) Outside the gas area of the station;

(ii) Near the exit gates, if the station is fenced, or near emergency exits, if not fenced; and

(iii) Not more than 500 feet (153 meters) from the limits of the station.

(b) If a compressor station supplies gas directly to a distribution system with no other adequate source of gas available, the emergency shutdown system must be designed so that it will not function at the wrong time and cause an unintended outage on the distribution system.

(c) On a platform located offshore or in inland navigable waters, the emergency shutdown system must be designed and installed to actuate automatically by each of the following events:

(1) In the case of an unattended compressor station:

(i) When the gas pressure equals the maximum allowable operating pressure plus 15 percent; or

(ii) When an uncontrolled fire occurs on the platform; and

(2) In the case of a compressor station in a building:

(i) When an uncontrolled fire occurs in the building; or

(ii) When the concentration of gas in air reaches 50 percent or more of the lower explosive limit in a building which has a source of ignition.

For the purpose of paragraph (c)(2)(ii) of this section, an electrical facility which conforms to Class 1, Group D, of the National Electrical Code is not a source of ignition.

[35 FR 13257, Aug. 19, 1970, as amended by Amdt. 192–27, 41 FR 34605, Aug. 16, 1976; Amdt. 192–85, 63 FR 37503, July 13, 1998]

§ 192.169 Compressor stations: Pressure limiting devices.

(a) Each compressor station must have pressure relief or other suitable protective devices of sufficient capacity and sensitivity to ensure that the maximum allowable operating pressure of the station piping and equipment is not exceeded by more than 10 percent.

(b) Each vent line that exhausts gas from the pressure relief valves of a compressor station must extend to a location where the gas may be discharged without hazard.

§ 192.171 Compressor stations: Additional safety equipment.

(a) Each compressor station must have adequate fire protection facilities. If fire pumps are a part of these facilities, their operation may not be affected by the emergency shutdown system.

(b) Each compressor station prime mover, other than an electrical induction or synchronous motor, must have an automatic device to shut down the unit before the speed of either the prime mover or the driven unit exceeds a maximum safe speed.

(c) Each compressor unit in a compressor station must have a shutdown or alarm device that operates in the event of inadequate cooling or lubrication of the unit.

(d) Each compressor station gas engine that operates with pressure gas injection must be equipped so that stoppage of the engine automatically shuts off the fuel and vents the engine distribution manifold.

(e) Each muffler for a gas engine in a compressor station must have vent slots or holes in the baffles of each compartment to prevent gas from being trapped in the muffler.

§ 192.173 Compressor stations: Ventilation.

Each compressor station building must be ventilated to ensure that employees are not endangered by the accumulation of gas in rooms, sumps, attics, pits, or other enclosed places.

§ 192.175 Pipe-type and bottle-type holders.

(a) Each pipe-type and bottle-type holder must be designed so as to prevent the accumulation of liquids in the holder, in connecting pipe, or in auxiliary equipment, that might cause corrosion or interfere with the safe operation of the holder.

(b) Each pipe-type or bottle-type holder must have minimum clearance from other holders in accordance with the following formula:

$C=(D\times P\times F)/48.33$) (C=(3D×P×F/1,000))

in which:

C=Minimum clearance between pipe containers or bottles in inches (millimeters).
D=Outside diameter of pipe containers or bottles in inches (millimeters).
P=Maximum allowable operating pressure, p.s.i. (kPa) gage.
F=Design factor as set forth in § 192.111 of this part.

[35 FR 13257, Aug. 19, 1970, as amended by Amdt. 192–85, 63 FR 37503, July 13, 1998]

§ 192.177 Additional provisions for bottle-type holders.

(a) Each bottle-type holder must be—

(1) Located on a site entirely surrounded by fencing that prevents access by unauthorized persons and with minimum clearance from the fence as follows:

Maximum allowable operating pressure	Minimum clearance feet (meters)
Less than 1,000 p.s.i. (7 MPa) gage	25 (7.6)
1,000 p.s.i. (7 MPa) gage or more	100 (31)

(2) Designed using the design factors set forth in § 192.111; and

(3) Buried with a minimum cover in accordance with § 192.327.

(b) Each bottle-type holder manufactured from steel that is not weldable under field conditions must comply with the following:

(1) A bottle-type holder made from alloy steel must meet the chemical and tensile requirements for the various grades of steel in ASTM A 372/A 372M.

(2) The actual yield-tensile ratio of the steel may not exceed 0.85.

(3) Welding may not be performed on the holder after it has been heat treated or stress relieved, except that copper wires may be attached to the small diameter portion of the bottle end closure for cathodic protection if a localized thermit welding process is used.

(4) The holder must be given a mill hydrostatic test at a pressure that produces a hoop stress at least equal to 85 percent of the SMYS.

(5) The holder, connection pipe, and components must be leak tested after installation as required by subpart J of this part.

[35 FR 13257, Aug. 19, 1970, as amended by Amdt. 192–58, 53 FR 1635, Jan. 21, 1988; Amdt. 192–62, 54 FR 5628, Feb. 6, 1989; 58 FR 14521, Mar. 18, 1993; Amdt. 192–85, 63 FR 37503, July 13, 1998]

§ 192.179 Transmission line valves.

(a) Each transmission line, other than offshore segments, must have sectionalizing block valves spaced as follows, unless in a particular case the Administrator finds that alternative spacing would provide an equivalent level of safety:

(1) Each point on the pipeline in a Class 4 location must be within 2½ miles (4 kilometers)of a valve.

(2) Each point on the pipeline in a Class 3 location must be within 4 miles (6.4 kilometers) of a valve.

(3) Each point on the pipeline in a Class 2 location must be within 7½ miles (12 kilometers) of a valve.

(4) Each point on the pipeline in a Class 1 location must be within 10 miles (16 kilometers) of a valve.

(b) Each sectionalizing block valve on a transmission line, other than offshore segments, must comply with the following:

(1) The valve and the operating device to open or close the valve must be readily accessible and protected from tampering and damage.

(2) The valve must be supported to prevent settling of the valve or movement of the pipe to which it is attached.

(c) Each section of a transmission line, other than offshore segments, between main line valves must have a blowdown valve with enough capacity to allow the transmission line to be blown down as rapidly as practicable. Each blowdown discharge must be located so the gas can be blown to the atmosphere without hazard and, if the transmission line is adjacent to an overhead electric line, so that the gas is directed away from the electrical conductors.

(d) Offshore segments of transmission lines must be equipped with valves or other components to shut off the flow of gas to an offshore platform in an emergency.

[35 FR 13257, Aug. 19, 1970, as amended by Amdt. 192–27, 41 FR 34606, Aug. 16, 1976; Amdt. 192–78, 61 FR 28784, June 6, 1996; Amdt. 192–85, 63 FR 37503, July 13, 1998]

§ 192.181 Distribution line valves.

(a) Each high-pressure distribution system must have valves spaced so as to reduce the time to shut down a section of main in an emergency. The valve spacing is determined by the operating pressure, the size of the mains, and the local physical conditions.

(b) Each regulator station controlling the flow or pressure of gas in a distribution system must have a valve installed on the inlet piping at a distance from the regulator station sufficient to permit the operation of the valve during an emergency that might preclude access to the station.

(c) Each valve on a main installed for operating or emergency purposes must comply with the following:

(1) The valve must be placed in a readily accessible location so as to facilitate its operation in an emergency.

(2) The operating stem or mechanism must be readily accessible.

(3) If the valve is installed in a buried box or enclosure, the box or enclosure must be installed so as to avoid transmitting external loads to the main.

§ 192.183 Vaults: Structural design requirements.

(a) Each underground vault or pit for valves, pressure relieving, pressure limiting, or pressure regulating stations, must be able to meet the loads which may be imposed upon it, and to protect installed equipment.

(b) There must be enough working space so that all of the equipment required in the vault or pit can be properly installed, operated, and maintained.

(c) Each pipe entering, or within, a regulator vault or pit must be steel for sizes 10 inch (254 millimeters), and less, except that control and gage piping may be copper. Where pipe extends through the vault or pit structure, provision must be made to prevent the passage of gases or liquids through the opening and to avert strains in the pipe.

[35 FR 13257, Aug. 19, 1970, as amended by Amdt. 192–85, 63 FR 37503, July 13, 1998]

§ 192.185 Vaults: Accessibility.

Each vault must be located in an accessible location and, so far as practical, away from:

(a) Street intersections or points where traffic is heavy or dense;

(b) Points of minimum elevation, catch basins, or places where the access cover will be in the course of surface waters; and

(c) Water, electric, steam, or other facilities.

§ 192.187 Vaults: Sealing, venting, and ventilation.

Each underground vault or closed top pit containing either a pressure regulating or reducing station, or a pressure limiting or relieving station, must be sealed, vented or ventilated as follows:

(a) When the internal volume exceeds 200 cubic feet (5.7 cubic meters):

(1) The vault or pit must be ventilated with two ducts, each having at least the ventilating effect of a pipe 4 inches (102 millimeters) in diameter;

(2) The ventilation must be enough to minimize the formation of combustible atmosphere in the vault or pit; and

(3) The ducts must be high enough above grade to disperse any gas-air mixtures that might be discharged.

(b) When the internal volume is more than 75 cubic feet (2.1 cubic meters) but less than 200 cubic feet (5.7 cubic meters):

(1) If the vault or pit is sealed, each opening must have a tight fitting cover

without open holes through which an explosive mixture might be ignited, and there must be a means for testing the internal atmosphere before removing the cover;

(2) If the vault or pit is vented, there must be a means of preventing external sources of ignition from reaching the vault atmosphere; or

(3) If the vault or pit is ventilated, paragraph (a) or (c) of this section applies.

(c) If a vault or pit covered by paragraph (b) of this section is ventilated by openings in the covers or gratings and the ratio of the internal volume, in cubic feet, to the effective ventilating area of the cover or grating, in square feet, is less than 20 to 1, no additional ventilation is required.

[35 FR 13257, Aug. 19, 1970, as amended by Amdt. 192–85, 63 FR 37503, July 13, 1998]

§ 192.189 Vaults: Drainage and waterproofing.

(a) Each vault must be designed so as to minimize the entrance of water.

(b) A vault containing gas piping may not be connected by means of a drain connection to any other underground structure.

(c) Electrical equipment in vaults must conform to the applicable requirements of Class 1, Group D, of the National Electrical Code, ANSI/NFPA 70.

[35 FR 13257, Aug. 19, 1970, as amended by Amdt. 192–76, 61 FR 26122, May 24, 1996]

§ 192.191 Design pressure of plastic fittings.

(a) Thermosetting fittings for plastic pipe must conform to ASTM D 2517, (incorporated by reference, *see* § 192.7).

(b) Thermoplastic fittings for plastic pipe must conform to ASTM D 2513–99, (incorporated by reference, *see* § 192.7).

[Amdt. 192–114, 75 FR 48603, Aug. 11, 2010]

§ 192.193 Valve installation in plastic pipe.

Each valve installed in plastic pipe must be designed so as to protect the plastic material against excessive torsional or shearing loads when the valve or shutoff is operated, and from any other secondary stresses that might be exerted through the valve or its enclosure.

§ 192.195 Protection against accidental overpressuring.

(a) *General requirements.* Except as provided in § 192.197, each pipeline that is connected to a gas source so that the maximum allowable operating pressure could be exceeded as the result of pressure control failure or of some other type of failure, must have pressure relieving or pressure limiting devices that meet the requirements of §§ 192.199 and 192.201.

(b) *Additional requirements for distribution systems.* Each distribution system that is supplied from a source of gas that is at a higher pressure than the maximum allowable operating pressure for the system must—

(1) Have pressure regulation devices capable of meeting the pressure, load, and other service conditions that will be experienced in normal operation of the system, and that could be activated in the event of failure of some portion of the system; and

(2) Be designed so as to prevent accidental overpressuring.

§ 192.197 Control of the pressure of gas delivered from high-pressure distribution systems.

(a) If the maximum actual operating pressure of the distribution system is 60 p.s.i. (414 kPa) gage, or less and a service regulator having the following characteristics is used, no other pressure limiting device is required:

(1) A regulator capable of reducing distribution line pressure to pressures recommended for household appliances.

(2) A single port valve with proper orifice for the maximum gas pressure at the regulator inlet.

(3) A valve seat made of resilient material designed to withstand abrasion of the gas, impurities in gas, cutting by the valve, and to resist permanent deformation when it is pressed against the valve port.

(4) Pipe connections to the regulator not exceeding 2 inches (51 millimeters) in diameter.

(5) A regulator that, under normal operating conditions, is able to regulate the downstream pressure within the necessary limits of accuracy and to

limit the build-up of pressure under no-flow conditions to prevent a pressure that would cause the unsafe operation of any connected and properly adjusted gas utilization equipment.

(6) A self-contained service regulator with no external static or control lines.

(b) If the maximum actual operating pressure of the distribution system is 60 p.s.i. (414 kPa) gage, or less, and a service regulator that does not have all of the characteristics listed in paragraph (a) of this section is used, or if the gas contains materials that seriously interfere with the operation of service regulators, there must be suitable protective devices to prevent unsafe overpressuring of the customer's appliances if the service regulator fails.

(c) If the maximum actual operating pressure of the distribution system exceeds 60 p.s.i. (414 kPa) gage, one of the following methods must be used to regulate and limit, to the maximum safe value, the pressure of gas delivered to the customer:

(1) A service regulator having the characteristics listed in paragraph (a) of this section, and another regulator located upstream from the service regulator. The upstream regulator may not be set to maintain a pressure higher than 60 p.s.i. (414 kPa) gage. A device must be installed between the upstream regulator and the service regulator to limit the pressure on the inlet of the service regulator to 60 p.s.i. (414 kPa) gage or less in case the upstream regulator fails to function properly. This device may be either a relief valve or an automatic shutoff that shuts, if the pressure on the inlet of the service regulator exceeds the set pressure (60 p.s.i. (414 kPa) gage or less), and remains closed until manually reset.

(2) A service regulator and a monitoring regulator set to limit, to a maximum safe value, the pressure of the gas delivered to the customer.

(3) A service regulator with a relief valve vented to the outside atmosphere, with the relief valve set to open so that the pressure of gas going to the customer does not exceed a maximum safe value. The relief valve may either be built into the service regulator or it may be a separate unit installed downstream from the service regulator. This combination may be used alone only in those cases where the inlet pressure on the service regulator does not exceed the manufacturer's safe working pressure rating of the service regulator, and may not be used where the inlet pressure on the service regulator exceeds 125 p.s.i. (862 kPa) gage. For higher inlet pressures, the methods in paragraph (c) (1) or (2) of this section must be used.

(4) A service regulator and an automatic shutoff device that closes upon a rise in pressure downstream from the regulator and remains closed until manually reset.

[35 FR 13257, Aug. 19, 1970, as amended by Amdt. 192–1, 35 FR 17660, Nov. 7, 1970; Amdt. 192–85, 63 FR 37503, July 13, 1998; Amdt. 192–93, 68 FR 53900, Sept. 15, 2003]

§ 192.199 Requirements for design of pressure relief and limiting devices.

Except for rupture discs, each pressure relief or pressure limiting device must:

(a) Be constructed of materials such that the operation of the device will not be impaired by corrosion;

(b) Have valves and valve seats that are designed not to stick in a position that will make the device inoperative;

(c) Be designed and installed so that it can be readily operated to determine if the valve is free, can be tested to determine the pressure at which it will operate, and can be tested for leakage when in the closed position;

(d) Have support made of noncombustible material;

(e) Have discharge stacks, vents, or outlet ports designed to prevent accumulation of water, ice, or snow, located where gas can be discharged into the atmosphere without undue hazard;

(f) Be designed and installed so that the size of the openings, pipe, and fittings located between the system to be protected and the pressure relieving device, and the size of the vent line, are adequate to prevent hammering of the valve and to prevent impairment of relief capacity;

(g) Where installed at a district regulator station to protect a pipeline system from overpressuring, be designed and installed to prevent any single incident such as an explosion in a vault or damage by a vehicle from affecting

the operation of both the overpressure protective device and the district regulator; and

(h) Except for a valve that will isolate the system under protection from its source of pressure, be designed to prevent unauthorized operation of any stop valve that will make the pressure relief valve or pressure limiting device inoperative.

[35 FR 13257, Aug. 19, 1970, as amended by Amdt. 192–1, 35 FR 17660, Nov. 17, 1970]

§ 192.201 Required capacity of pressure relieving and limiting stations.

(a) Each pressure relief station or pressure limiting station or group of those stations installed to protect a pipeline must have enough capacity, and must be set to operate, to insure the following:

(1) In a low pressure distribution system, the pressure may not cause the unsafe operation of any connected and properly adjusted gas utilization equipment.

(2) In pipelines other than a low pressure distribution system:

(i) If the maximum allowable operating pressure is 60 p.s.i. (414 kPa) gage or more, the pressure may not exceed the maximum allowable operating pressure plus 10 percent, or the pressure that produces a hoop stress of 75 percent of SMYS, whichever is lower;

(ii) If the maximum allowable operating pressure is 12 p.s.i. (83 kPa) gage or more, but less than 60 p.s.i. (414 kPa) gage, the pressure may not exceed the maximum allowable operating pressure plus 6 p.s.i. (41 kPa) gage; or

(iii) If the maximum allowable operating pressure is less than 12 p.s.i. (83 kPa) gage, the pressure may not exceed the maximum allowable operating pressure plus 50 percent.

(b) When more than one pressure regulating or compressor station feeds into a pipeline, relief valves or other protective devices must be installed at each station to ensure that the complete failure of the largest capacity regulator or compressor, or any single run of lesser capacity regulators or compressors in that station, will not impose pressures on any part of the pipeline or distribution system in excess of those for which it was designed, or against which it was protected, whichever is lower.

(c) Relief valves or other pressure limiting devices must be installed at or near each regulator station in a low-pressure distribution system, with a capacity to limit the maximum pressure in the main to a pressure that will not exceed the safe operating pressure for any connected and properly adjusted gas utilization equipment.

[35 FR 13257, Aug. 19, 1970, as amended by Amdt. 192–9, 37 FR 20827, Oct. 4, 1972; Amdt. 192–85, 63 FR 37503, July 13, 1998]

§ 192.203 Instrument, control, and sampling pipe and components.

(a) *Applicability*. This section applies to the design of instrument, control, and sampling pipe and components. It does not apply to permanently closed systems, such as fluid-filled temperature-responsive devices.

(b) *Materials and design*. All materials employed for pipe and components must be designed to meet the particular conditions of service and the following:

(1) Each takeoff connection and attaching boss, fitting, or adapter must be made of suitable material, be able to withstand the maximum service pressure and temperature of the pipe or equipment to which it is attached, and be designed to satisfactorily withstand all stresses without failure by fatigue.

(2) Except for takeoff lines that can be isolated from sources of pressure by other valving, a shutoff valve must be installed in each takeoff line as near as practicable to the point of takeoff. Blowdown valves must be installed where necessary.

(3) Brass or copper material may not be used for metal temperatures greater than 400 °F (204 °C).

(4) Pipe or components that may contain liquids must be protected by heating or other means from damage due to freezing.

(5) Pipe or components in which liquids may accumulate must have drains or drips.

(6) Pipe or components subject to clogging from solids or deposits must have suitable connections for cleaning.

(7) The arrangement of pipe, components, and supports must provide safety under anticipated operating stresses.

(8) Each joint between sections of pipe, and between pipe and valves or fittings, must be made in a manner suitable for the anticipated pressure and temperature condition. Slip type expansion joints may not be used. Expansion must be allowed for by providing flexibility within the system itself.

(9) Each control line must be protected from anticipated causes of damage and must be designed and installed to prevent damage to any one control line from making both the regulator and the over-pressure protective device inoperative.

[35 FR 13257, Aug. 19, 1970, as amended by Amdt. 192–78, 61 FR 28784, June 6, 1996; Amdt. 192–85, 63 FR 37503, July 13, 1998]

Subpart E—Welding of Steel in Pipelines

§ 192.221 Scope.

(a) This subpart prescribes minimum requirements for welding steel materials in pipelines.

(b) This subpart does not apply to welding that occurs during the manufacture of steel pipe or steel pipeline components.

§ 192.225 Welding procedures.

(a) Welding must be performed by a qualified welder in accordance with welding procedures qualified under section 5 of API 1104 (incorporated by reference, *see* § 192.7) or section IX of the ASME Boiler and Pressure Vessel Code ''Welding and Brazing Qualifications'' (incorporated by reference, *see* § 192.7) to produce welds meeting the requirements of this subpart. The quality of the test welds used to qualify welding procedures shall be determined by destructive testing in accordance with the applicable welding standard(s).

(b) Each welding procedure must be recorded in detail, including the results of the qualifying tests. This record must be retained and followed whenever the procedure is used.

[Amdt. 192–52, 51 FR 20297, June 4, 1986; Amdt. 192–94, 69 FR 32894, June 14, 2004]

§ 192.227 Qualification of welders.

(a) Except as provided in paragraph (b) of this section, each welder must be qualified in accordance with section 6 of API 1104 (incorporated by reference, see § 192.7) or section IX of the ASME Boiler and Pressure Vessel Code (incorporated by reference, see § 192.7). However, a welder qualified under an earlier edition than listed in § 192.7 of this part may weld but may not requalify under that earlier edition.

(b) A welder may qualify to perform welding on pipe to be operated at a pressure that produces a hoop stress of less than 20 percent of SMYS by performing an acceptable test weld, for the process to be used, under the test set forth in section I of Appendix C of this part. Each welder who is to make a welded service line connection to a main must first perform an acceptable test weld under section II of Appendix C of this part as a requirement of the qualifying test.

[35 FR 13257, Aug. 19, 1970, as amended by Amdt. 192–43, 47 FR 46851, Oct. 21, 1982; Amdt. 192–52, 51 FR 20297, June 4, 1986; Amdt. 192–78, 61 FR 28784, June 6, 1996; Amdt. 192–94, 69 FR 32894, June 14, 2004; Amdt. 192–103, 72 FR 4656, Feb. 1, 2007]

§ 192.229 Limitations on welders.

(a) No welder whose qualification is based on nondestructive testing may weld compressor station pipe and components.

(b) No welder may weld with a particular welding process unless, within the preceding 6 calendar months, he has engaged in welding with that process.

(c) A welder qualified under § 192.227(a)—

(1) May not weld on pipe to be operated at a pressure that produces a hoop stress of 20 percent or more of SMYS unless within the preceding 6 calendar months the welder has had one weld tested and found acceptable under the sections 6 or 9 of API Standard 1104 (incorporated by reference, *see* § 192.7). Alternatively, welders may maintain an ongoing qualification status by performing welds tested and found acceptable under the above acceptance criteria at least twice each calendar year, but at intervals not exceeding 7½ months. A welder qualified under an

earlier edition of a standard listed in § 192.7 of this part may weld but may not requalify under that earlier edition; and

(2) May not weld on pipe to be operated at a pressure that produces a hoop stress of less than 20 percent of SMYS unless the welder is tested in accordance with paragraph (c)(1) of this section or requalifies under paragraph (d)(1) or (d)(2) of this section.

(d) A welder qualified under § 192.227(b) may not weld unless—

(1) Within the preceding 15 calendar months, but at least once each calendar year, the welder has requalified under § 192.227(b); or

(2) Within the preceding 7½ calendar months, but at least twice each calendar year, the welder has had—

(i) A production weld cut out, tested, and found acceptable in accordance with the qualifying test; or

(ii) For welders who work only on service lines 2 inches (51 millimeters) or smaller in diameter, two sample welds tested and found acceptable in accordance with the test in section III of Appendix C of this part.

[35 FR 13257, Aug. 19, 1970, as amended by Amdt. 192–37, 46 FR 10159, Feb. 2, 1981; Amdt. 192–78, 61 FR 28784, June 6, 1996; Amdt. 192–85, 63 FR 37503, July 13, 1998; Amdt. 192–94, 69 FR 32895, June 14, 2004]

§ 192.231 Protection from weather.

The welding operation must be protected from weather conditions that would impair the quality of the completed weld.

§ 192.233 Miter joints.

(a) A miter joint on steel pipe to be operated at a pressure that produces a hoop stress of 30 percent or more of SMYS may not deflect the pipe more than 3°.

(b) A miter joint on steel pipe to be operated at a pressure that produces a hoop stress of less than 30 percent, but more than 10 percent, of SMYS may not deflect the pipe more than 12½° and must be a distance equal to one pipe diameter or more away from any other miter joint, as measured from the crotch of each joint.

(c) A miter joint on steel pipe to be operated at a pressure that produces a hoop stress of 10 percent or less of SMYS may not deflect the pipe more than 90°.

§ 192.235 Preparation for welding.

Before beginning any welding, the welding surfaces must be clean and free of any material that may be detrimental to the weld, and the pipe or component must be aligned to provide the most favorable condition for depositing the root bead. This alignment must be preserved while the root bead is being deposited.

§ 192.241 Inspection and test of welds.

(a) Visual inspection of welding must be conducted by an individual qualified by appropriate training and experience to ensure that:

(1) The welding is performed in accordance with the welding procedure; and

(2) The weld is acceptable under paragraph (c) of this section.

(b) The welds on a pipeline to be operated at a pressure that produces a hoop stress of 20 percent or more of SMYS must be nondestructively tested in accordance with § 192.243, except that welds that are visually inspected and approved by a qualified welding inspector need not be nondestructively tested if:

(1) The pipe has a nominal diameter of less than 6 inches (152 millimeters); or

(2) The pipeline is to be operated at a pressure that produces a hoop stress of less than 40 percent of SMYS and the welds are so limited in number that nondestructive testing is impractical.

(c) The acceptability of a weld that is nondestructively tested or visually inspected is determined according to the standards in Section 9 of API Standard 1104 (incorporated by reference, *see* § 192.7). However, if a girth weld is unacceptable under those standards for a reason other than a crack, and if Appendix A to API 1104 applies to the weld, the acceptability of the weld may be further determined under that appendix.

[35 FR 13257, Aug. 19, 1970, as amended by Amdt. 192–37, 46 FR 10160, Feb. 2, 1981; Amdt. 192–78, 61 FR 28784, June 6, 1996; Amdt. 192–85, 63 FR 37503, July 13, 1998; Amdt. 192–94, 69 FR 32894, June 14, 2004]

§ 192.243 Nondestructive testing.

(a) Nondestructive testing of welds must be performed by any process, other than trepanning, that will clearly indicate defects that may affect the integrity of the weld.

(b) Nondestructive testing of welds must be performed:

(1) In accordance with written procedures; and

(2) By persons who have been trained and qualified in the established procedures and with the equipment employed in testing.

(c) Procedures must be established for the proper interpretation of each nondestructive test of a weld to ensure the acceptability of the weld under § 192.241(c).

(d) When nondestructive testing is required under § 192.241(b), the following percentages of each day's field butt welds, selected at random by the operator, must be nondestructively tested over their entire circumference:

(1) In Class 1 locations, except offshore, at least 10 percent.

(2) In Class 2 locations, at least 15 percent.

(3) In Class 3 and Class 4 locations, at crossings of major or navigable rivers, offshore, and within railroad or public highway rights-of-way, including tunnels, bridges, and overhead road crossings, 100 percent unless impracticable, in which case at least 90 percent. Nondestructive testing must be impracticable for each girth weld not tested.

(4) At pipeline tie-ins, including tie-ins of replacement sections, 100 percent.

(e) Except for a welder whose work is isolated from the principal welding activity, a sample of each welder's work for each day must be nondestructively tested, when nondestructive testing is required under § 192.241(b).

(f) When nondestructive testing is required under § 192.241(b), each operator must retain, for the life of the pipeline, a record showing by milepost, engineering station, or by geographic feature, the number of girth welds made, the number nondestructively tested, the number rejected, and the disposition of the rejects.

[35 FR 13257, Aug. 19, 1970, as amended by Amdt. 192–27, 41 FR 34606, Aug. 16, 1976; Amdt. 192–50, 50 FR 37192, Sept. 12, 1985; Amdt. 192–78, 61 FR 28784, June 6, 1996]

§ 192.245 Repair or removal of defects.

(a) Each weld that is unacceptable under § 192.241(c) must be removed or repaired. Except for welds on an offshore pipeline being installed from a pipeline vessel, a weld must be removed if it has a crack that is more than 8 percent of the weld length.

(b) Each weld that is repaired must have the defect removed down to sound metal and the segment to be repaired must be preheated if conditions exist which would adversely affect the quality of the weld repair. After repair, the segment of the weld that was repaired must be inspected to ensure its acceptability.

(c) Repair of a crack, or of any defect in a previously repaired area must be in accordance with written weld repair procedures that have been qualified under § 192.225. Repair procedures must provide that the minimum mechanical properties specified for the welding procedure used to make the original weld are met upon completion of the final weld repair.

[Amdt. 192–46, 48 FR 48674, Oct. 20, 1983]

Subpart F—Joining of Materials Other Than by Welding

§ 192.271 Scope.

(a) This subpart prescribes minimum requirements for joining materials in pipelines, other than by welding.

(b) This subpart does not apply to joining during the manufacture of pipe or pipeline components.

§ 192.273 General.

(a) The pipeline must be designed and installed so that each joint will sustain the longitudinal pullout or thrust forces caused by contraction or expansion of the piping or by anticipated external or internal loading.

(b) Each joint must be made in accordance with written procedures that have been proven by test or experience to produce strong gastight joints.

(c) Each joint must be inspected to insure compliance with this subpart.

§ 192.275 Cast iron pipe.

(a) Each caulked bell and spigot joint in cast iron pipe must be sealed with mechanical leak clamps.

(b) Each mechanical joint in cast iron pipe must have a gasket made of a resilient material as the sealing medium. Each gasket must be suitably confined and retained under compression by a separate gland or follower ring.

(c) Cast iron pipe may not be joined by threaded joints.

(d) Cast iron pipe may not be joined by brazing.

[35 FR 13257, Aug. 19, 1970, as amended by Amdt. 192–62, 54 FR 5628, Feb. 6, 1989]

§ 192.277 Ductile iron pipe.

(a) Ductile iron pipe may not be joined by threaded joints.

(b) Ductile iron pipe may not be joined by brazing.

[35 FR 13257, Aug. 19, 1970, as amended by Amdt. 192–62, 54 FR 5628, Feb. 6, 1989]

§ 192.279 Copper pipe.

Copper pipe may not be threaded except that copper pipe used for joining screw fittings or valves may be threaded if the wall thickness is equivalent to the comparable size of Schedule 40 or heavier wall pipe listed in Table C1 of ASME/ANSI B16.5.

[Amdt. 192–62, 54 FR 5628, Feb. 6, 1989, as amended at 58 FR 14521, Mar. 18, 1993]

§ 192.281 Plastic pipe.

(a) *General.* A plastic pipe joint that is joined by solvent cement, adhesive, or heat fusion may not be disturbed until it has properly set. Plastic pipe may not be joined by a threaded joint or miter joint.

(b) *Solvent cement joints.* Each solvent cement joint on plastic pipe must comply with the following:

(1) The mating surfaces of the joint must be clean, dry, and free of material which might be detrimental to the joint.

(2) The solvent cement must conform to ASTM D2513–99, (incorporated by reference, *see* § 192.7).

(3) The joint may not be heated to accelerate the setting of the cement.

(c) *Heat-fusion joints.* Each heat-fusion joint on plastic pipe must comply with the following:

(1) A butt heat-fusion joint must be joined by a device that holds the heater element square to the ends of the piping, compresses the heated ends together, and holds the pipe in proper alignment while the plastic hardens.

(2) A socket heat-fusion joint must be joined by a device that heats the mating surfaces of the joint uniformly and simultaneously to essentially the same temperature.

(3) An electrofusion joint must be joined utilizing the equipment and techniques of the fittings manufacturer or equipment and techniques shown, by testing joints to the requirements of § 192.283(a)(1)(iii), to be at least equivalent to those of the fittings manufacturer.

(4) Heat may not be applied with a torch or other open flame.

(d) *Adhesive joints.* Each adhesive joint on plastic pipe must comply with the following:

(1) The adhesive must conform to ASTM Designation D 2517.

(2) The materials and adhesive must be compatible with each other.

(e) *Mechanical joints.* Each compression type mechanical joint on plastic pipe must comply with the following:

(1) The gasket material in the coupling must be compatible with the plastic.

(2) A rigid internal tubular stiffener, other than a split tubular stiffener, must be used in conjunction with the coupling.

[35 FR 13257, Aug. 19, 1970, as amended by Amdt. 192–34, 44 FR 42973, July 23, 1979; Amdt. 192–58, 53 FR 1635, Jan. 21, 1988; Amdt. 192–61, 53 FR 36793, Sept. 22, 1988; 58 FR 14521, Mar. 18, 1993; Amdt. 192–78, 61 FR 28784, June 6, 1996; Amdt. 192–114, 75 FR 48603, Aug. 11, 2010]

§ 192.283 Plastic pipe: Qualifying joining procedures.

(a) *Heat fusion, solvent cement, and adhesive joints.* Before any written procedure established under § 192.273(b) is used for making plastic pipe joints by a heat fusion, solvent cement, or adhesive method, the procedure must be qualified by subjecting specimen joints

made according to the procedure to the following tests:

(1) The burst test requirements of—

(i) In the case of thermoplastic pipe, paragraph 6.6 (sustained pressure test) or paragraph 6.7 (Minimum Hydrostatic Burst Test) or paragraph 8.9 (Sustained Static pressure Test) of ASTM D2513–99 (incorporated by reference, *see* § 192.7);

(ii) In the case of thermosetting plastic pipe, paragraph 8.5 (Minimum Hydrostatic Burst Pressure) or paragraph 8.9 (Sustained Static Pressure Test) of ASTM D2517 (incorporated by reference, *see* § 192.7); or

(iii) In the case of electrofusion fittings for polyethylene (PE) pipe and tubing, paragraph 9.1 (Minimum Hydraulic Burst Pressure Test), paragraph 9.2 (Sustained Pressure Test), paragraph 9.3 (Tensile Strength Test), or paragraph 9.4 (Joint Integrity Tests) of ASTM Designation F1055 (incorporated by reference, *see* § 192.7).

(2) For procedures intended for lateral pipe connections, subject a specimen joint made from pipe sections joined at right angles according to the procedure to a force on the lateral pipe until failure occurs in the specimen. If failure initiates outside the joint area, the procedure qualifies for use; and

(3) For procedures intended for nonlateral pipe connections, follow the tensile test requirements of ASTM D638 (incorporated by reference, *see* § 192.7), except that the test may be conducted at ambient temperature and humidity If the specimen elongates no less than 25 percent or failure initiates outside the joint area, the procedure qualifies for use.

(b) *Mechanical joints*. Before any written procedure established under § 192.273(b) is used for making mechanical plastic pipe joints that are designed to withstand tensile forces, the procedure must be qualified by subjecting 5 specimen joints made according to the procedure to the following tensile test:

(1) Use an apparatus for the test as specified in ASTM D 638 (except for conditioning), (incorporated by reference, *see* § 192.7).

(2) The specimen must be of such length that the distance between the grips of the apparatus and the end of the stiffener does not affect the joint strength.

(3) The speed of testing is 0.20 in (5.0 mm) per minute, plus or minus 25 percent.

(4) Pipe specimens less than 4 inches (102 mm) in diameter are qualified if the pipe yields to an elongation of no less than 25 percent or failure initiates outside the joint area.

(5) Pipe specimens 4 inches (102 mm) and larger in diameter shall be pulled until the pipe is subjected to a tensile stress equal to or greater than the maximum thermal stress that would be produced by a temperature change of 100 °F (38 °C) or until the pipe is pulled from the fitting. If the pipe pulls from the fitting, the lowest value of the five test results or the manufacturer's rating, whichever is lower must be used in the design calculations for stress.

(6) Each specimen that fails at the grips must be retested using new pipe.

(7) Results obtained pertain only to the specific outside diameter, and material of the pipe tested, except that testing of a heavier wall pipe may be used to qualify pipe of the same material but with a lesser wall thickness.

(c) A copy of each written procedure being used for joining plastic pipe must be available to the persons making and inspecting joints.

(d) Pipe or fittings manufactured before July 1, 1980, may be used in accordance with procedures that the manufacturer certifies will produce a joint as strong as the pipe.

[Amdt. 192–34A, 45 FR 9935, Feb. 14, 1980, as amended by Amdt. 192–34B, 46 FR 39, Jan. 2, 1981; 47 FR 32720, July 29, 1982; 47 FR 49973, Nov. 4, 1982; 58 FR 14521, Mar. 18, 1993; Amdt. 192–78, 61 FR 28784, June 6, 1996; Amdt. 192–85, 63 FR 37503, July 13, 1998; Amdt. 192–94, 69 FR 32895, June 14, 2004; Amdt. 192–94, 69 FR 54592, Sept. 9, 2004; Amdt. 192–114, 75 FR 48603, Aug. 11, 2010]

§ 192.285 Plastic pipe: Qualifying persons to make joints.

(a) No person may make a plastic pipe joint unless that person has been qualified under the applicable joining procedure by:

(1) Appropriate training or experience in the use of the procedure; and

(2) Making a specimen joint from pipe sections joined according to the procedure that passes the inspection

and test set forth in paragraph (b) of this section.

(b) The specimen joint must be:

(1) Visually examined during and after assembly or joining and found to have the same appearance as a joint or photographs of a joint that is acceptable under the procedure; and

(2) In the case of a heat fusion, solvent cement, or adhesive joint:

(i) Tested under any one of the test methods listed under §192.283(a) applicable to the type of joint and material being tested;

(ii) Examined by ultrasonic inspection and found not to contain flaws that would cause failure; or

(iii) Cut into at least 3 longitudinal straps, each of which is:

(A) Visually examined and found not to contain voids or discontinuities on the cut surfaces of the joint area; and

(B) Deformed by bending, torque, or impact, and if failure occurs, it must not initiate in the joint area.

(c) A person must be requalified under an applicable procedure, if during any 12-month period that person:

(1) Does not make any joints under that procedure; or

(2) Has 3 joints or 3 percent of the joints made, whichever is greater, under that procedure that are found unacceptable by testing under §192.513.

(d) Each operator shall establish a method to determine that each person making joints in plastic pipelines in the operator's system is qualified in accordance with this section.

[Amdt. 192–34A, 45 FR 9935, Feb. 14, 1980, as amended by Amdt. 192–34B, 46 FR 39, Jan. 2, 1981; Amdt. 192–93, 68 FR 53900, Sept. 15, 2003]

§ 192.287 Plastic pipe: Inspection of joints.

No person may carry out the inspection of joints in plastic pipes required by §§192.273(c) and 192.285(b) unless that person has been qualified by appropriate training or experience in evaluating the acceptability of plastic pipe joints made under the applicable joining procedure.

[Amdt. 192–34, 44 FR 42974, July 23, 1979]

Subpart G—General Construction Requirements for Transmission Lines and Mains

§ 192.301 Scope.

This subpart prescribes minimum requirements for constructing transmission lines and mains.

§ 192.303 Compliance with specifications or standards.

Each transmission line or main must be constructed in accordance with comprehensive written specifications or standards that are consistent with this part.

§ 192.305 Inspection: General.

Each transmission line or main must be inspected to ensure that it is constructed in accordance with this part.

§ 192.307 Inspection of materials.

Each length of pipe and each other component must be visually inspected at the site of installation to ensure that it has not sustained any visually determinable damage that could impair its serviceability.

§ 192.309 Repair of steel pipe.

(a) Each imperfection or damage that impairs the serviceability of a length of steel pipe must be repaired or removed. If a repair is made by grinding, the remaining wall thickness must at least be equal to either:

(1) The minimum thickness required by the tolerances in the specification to which the pipe was manufactured; or

(2) The nominal wall thickness required for the design pressure of the pipeline.

(b) Each of the following dents must be removed from steel pipe to be operated at a pressure that produces a hoop stress of 20 percent, or more, of SMYS, unless the dent is repaired by a method that reliable engineering tests and analyses show can permanently restore the serviceability of the pipe:

(1) A dent that contains a stress concentrator such as a scratch, gouge, groove, or arc burn.

(2) A dent that affects the longitudinal weld or a circumferential weld.

(3) In pipe to be operated at a pressure that produces a hoop stress of 40

percent or more of SMYS, a dent that has a depth of:

(i) More than ¼ inch (6.4 millimeters) in pipe 12¾ inches (324 millimeters) or less in outer diameter; or

(ii) More than 2 percent of the nominal pipe diameter in pipe over 12¾ inches (324 millimeters) in outer diameter.

For the purpose of this section a ''dent'' is a depression that produces a gross disturbance in the curvature of the pipe wall without reducing the pipe-wall thickness. The depth of a dent is measured as the gap between the lowest point of the dent and a prolongation of the original contour of the pipe.

(c) Each arc burn on steel pipe to be operated at a pressure that produces a hoop stress of 40 percent, or more, of SMYS must be repaired or removed. If a repair is made by grinding, the arc burn must be completely removed and the remaining wall thickness must be at least equal to either:

(1) The minimum wall thickness required by the tolerances in the specification to which the pipe was manufactured; or

(2) The nominal wall thickness required for the design pressure of the pipeline.

(d) A gouge, groove, arc burn, or dent may not be repaired by insert patching or by pounding out.

(e) Each gouge, groove, arc burn, or dent that is removed from a length of pipe must be removed by cutting out the damaged portion as a cylinder.

[35 FR 13257, Aug. 19, 1970, as amended by Amdt. 192–1, 35 FR 17660, Nov. 17, 1970; Amdt. 192–85, 63 FR 37503, July 13, 1998; Amdt. 192–88, 64 FR 69664, Dec. 14, 1999]

§ 192.311 Repair of plastic pipe.

Each imperfection or damage that would impair the serviceability of plastic pipe must be repaired or removed.

[Amdt. 192–93, 68 FR 53900, Sept. 15, 2003]

§ 192.313 Bends and elbows.

(a) Each field bend in steel pipe, other than a wrinkle bend made in accordance with § 192.315, must comply with the following:

(1) A bend must not impair the serviceability of the pipe.

(2) Each bend must have a smooth contour and be free from buckling, cracks, or any other mechanical damage.

(3) On pipe containing a longitudinal weld, the longitudinal weld must be as near as practicable to the neutral axis of the bend unless:

(i) The bend is made with an internal bending mandrel; or

(ii) The pipe is 12 inches (305 millimeters) or less in outside diameter or has a diameter to wall thickness ratio less than 70.

(b) Each circumferential weld of steel pipe which is located where the stress during bending causes a permanent deformation in the pipe must be nondestructively tested either before or after the bending process.

(c) Wrought-steel welding elbows and transverse segments of these elbows may not be used for changes in direction on steel pipe that is 2 inches (51 millimeters) or more in diameter unless the arc length, as measured along the crotch, is at least 1 inch (25 millimeters).

[Amdt. No. 192–26, 41 FR 26018, June 24, 1976, as amended by Amdt. 192–29, 42 FR 42866, Aug. 25, 1977; Amdt. 192–29, 42 FR 60148, Nov. 25, 1977; Amdt. 192–49, 50 FR 13225, Apr. 3, 1985; Amdt. 192–85, 63 FR 37503, July 13, 1998]

§ 192.315 Wrinkle bends in steel pipe.

(a) A wrinkle bend may not be made on steel pipe to be operated at a pressure that produces a hoop stress of 30 percent, or more, of SMYS.

(b) Each wrinkle bend on steel pipe must comply with the following:

(1) The bend must not have any sharp kinks.

(2) When measured along the crotch of the bend, the wrinkles must be a distance of at least one pipe diameter.

(3) On pipe 16 inches (406 millimeters) or larger in diameter, the bend may not have a deflection of more than 1½° for each wrinkle.

(4) On pipe containing a longitudinal weld the longitudinal seam must be as near as practicable to the neutral axis of the bend.

[35 FR 13257, Aug. 19, 1970, as amended by Amdt. 192–85, 63 FR 37503, July 13, 1998]

§ 192.317 Protection from hazards.

(a) The operator must take all practicable steps to protect each transmission line or main from washouts, floods, unstable soil, landslides, or other hazards that may cause the pipeline to move or to sustain abnormal loads. In addition, the operator must take all practicable steps to protect offshore pipelines from damage by mud slides, water currents, hurricanes, ship anchors, and fishing operations.

(b) Each aboveground transmission line or main, not located offshore or in inland navigable water areas, must be protected from accidental damage by vehicular traffic or other similar causes, either by being placed at a safe distance from the traffic or by installing barricades.

(c) Pipelines, including pipe risers, on each platform located offshore or in inland navigable waters must be protected from accidental damage by vessels.

[Amdt. 192–27, 41 FR 34606, Aug. 16, 1976, as amended by Amdt. 192–78, 61 FR 28784, June 6, 1996]

§ 192.319 Installation of pipe in a ditch.

(a) When installed in a ditch, each transmission line that is to be operated at a pressure producing a hoop stress of 20 percent or more of SMYS must be installed so that the pipe fits the ditch so as to minimize stresses and protect the pipe coating from damage.

(b) When a ditch for a transmission line or main is backfilled, it must be backfilled in a manner that:

(1) Provides firm support under the pipe; and

(2) Prevents damage to the pipe and pipe coating from equipment or from the backfill material.

(c) All offshore pipe in water at least 12 feet (3.7 meters) deep but not more than 200 feet (61 meters) deep, as measured from the mean low tide, except pipe in the Gulf of Mexico and its inlets under 15 feet (4.6 meters) of water, must be installed so that the top of the pipe is below the natural bottom unless the pipe is supported by stanchions, held in place by anchors or heavy concrete coating, or protected by an equivalent means. Pipe in the Gulf of Mexico and its inlets under 15 feet (4.6 meters) of water must be installed so that the top of the pipe is 36 inches (914 millimeters) below the seabed for normal excavation or 18 inches (457 millimeters) for rock excavation.

[35 FR 13257, Aug. 19, 1970, as amended by Amdt. 192–27, 41 FR 34606, Aug. 16, 1976; Amdt. 192–78, 61 FR 28784, June 6, 1996; Amdt. 192–85, 63 FR 37503, July 13, 1998]

§ 192.321 Installation of plastic pipe.

(a) Plastic pipe must be installed below ground level except as provided by paragraphs (g) and (h) of this section.

(b) Plastic pipe that is installed in a vault or any other below grade enclosure must be completely encased in gas-tight metal pipe and fittings that are adequately protected from corrosion.

(c) Plastic pipe must be installed so as to minimize shear or tensile stresses.

(d) Thermoplastic pipe that is not encased must have a minimum wall thickness of 0.090 inch (2.29 millimeters), except that pipe with an outside diameter of 0.875 inch (22.3 millimeters) or less may have a minimum wall thickness of 0.062 inch (1.58 millimeters).

(e) Plastic pipe that is not encased must have an electrically conducting wire or other means of locating the pipe while it is underground. Tracer wire may not be wrapped around the pipe and contact with the pipe must be minimized but is not prohibited. Tracer wire or other metallic elements installed for pipe locating purposes must be resistant to corrosion damage, either by use of coated copper wire or by other means.

(f) Plastic pipe that is being encased must be inserted into the casing pipe in a manner that will protect the plastic. The leading end of the plastic must be closed before insertion.

(g) Uncased plastic pipe may be temporarily installed above ground level under the following conditions:

(1) The operator must be able to demonstrate that the cumulative aboveground exposure of the pipe does not exceed the manufacturer's recommended maximum period of exposure or 2 years, whichever is less.

(2) The pipe either is located where damage by external forces is unlikely or is otherwise protected against such damage.

(3) The pipe adequately resists exposure to ultraviolet light and high and low temperatures.

(h) Plastic pipe may be installed on bridges provided that it is:

(1) Installed with protection from mechanical damage, such as installation in a metallic casing;

(2) Protected from ultraviolet radiation; and

(3) Not allowed to exceed the pipe temperature limits specified in § 192.123.

[35 FR 13257, Aug. 19, 1970, as amended by Amdt. 192–78, 61 FR 28784, June 6, 1996; Amdt. 192–85, 63 FR 37503, July 13, 1998; Amdt. 192–93, 68 FR 53900, Sept. 15, 2003; Amdt. 192–94, 69 FR 32895, June 14, 2004]

§ 192.323 Casing.

Each casing used on a transmission line or main under a railroad or highway must comply with the following:

(a) The casing must be designed to withstand the superimposed loads.

(b) If there is a possibility of water entering the casing, the ends must be sealed.

(c) If the ends of an unvented casing are sealed and the sealing is strong enough to retain the maximum allowable operating pressure of the pipe, the casing must be designed to hold this pressure at a stress level of not more than 72 percent of SMYS.

(d) If vents are installed on a casing, the vents must be protected from the weather to prevent water from entering the casing.

§ 192.325 Underground clearance.

(a) Each transmission line must be installed with at least 12 inches (305 millimeters) of clearance from any other underground structure not associated with the transmission line. If this clearance cannot be attained, the transmission line must be protected from damage that might result from the proximity of the other structure.

(b) Each main must be installed with enough clearance from any other underground structure to allow proper maintenance and to protect against damage that might result from proximity to other structures.

(c) In addition to meeting the requirements of paragraph (a) or (b) of this section, each plastic transmission line or main must be installed with sufficient clearance, or must be insulated, from any source of heat so as to prevent the heat from impairing the serviceability of the pipe.

(d) Each pipe-type or bottle-type holder must be installed with a minimum clearance from any other holder as prescribed in § 192.175(b).

[35 FR 13257, Aug. 19, 1970, as amended by Amdt. 192–85, 63 FR 37503, July 13, 1998]

§ 192.327 Cover.

(a) Except as provided in paragraphs (c), (e), (f), and (g) of this section, each buried transmission line must be installed with a minimum cover as follows:

Location	Normal soil	Consolidated rock
Inches (Millimeters).		
Class 1 locations	30 (762)	18 (457)
Class 2, 3, and 4 locations	36 (914)	24 (610)
Drainage ditches of public roads and railroad crossings	36 (914)	24 (610)

(b) Except as provided in paragraphs (c) and (d) of this section, each buried main must be installed with at least 24 inches (610 millimeters) of cover.

(c) Where an underground structure prevents the installation of a transmission line or main with the minimum cover, the transmission line or main may be installed with less cover if it is provided with additional protection to withstand anticipated external loads.

(d) A main may be installed with less than 24 inches (610 millimeters) of cover if the law of the State or municipality:

(1) Establishes a minimum cover of less than 24 inches (610 millimeters);

(2) Requires that mains be installed in a common trench with other utility lines; and

(3) Provides adequately for prevention of damage to the pipe by external forces.

(e) Except as provided in paragraph (c) of this section, all pipe installed in a navigable river, stream, or harbor must be installed with a minimum

cover of 48 inches (1,219 millimeters) in soil or 24 inches (610 millimeters) in consolidated rock between the top of the pipe and the underwater natural bottom (as determined by recognized and generally accepted practices).

(f) All pipe installed offshore, except in the Gulf of Mexico and its inlets, under water not more than 200 feet (60 meters) deep, as measured from the mean low tide, must be installed as follows:

(1) Except as provided in paragraph (c) of this section, pipe under water less than 12 feet (3.66 meters) deep, must be installed with a minimum cover of 36 inches (914 millimeters) in soil or 18 inches (457 millimeters) in consolidated rock between the top of the pipe and the natural bottom.

(2) Pipe under water at least 12 feet (3.66 meters) deep must be installed so that the top of the pipe is below the natural bottom, unless the pipe is supported by stanchions, held in place by anchors or heavy concrete coating, or protected by an equivalent means.

(g) All pipelines installed under water in the Gulf of Mexico and its inlets, as defined in § 192.3, must be installed in accordance with § 192.612(b)(3).

[35 FR 13257, Aug. 19, 1970, as amended by Amdt. 192–27, 41 FR 34606, Aug. 16, 1976; Amdt. 192–78, 61 FR 28785, June 6, 1996; Amdt. 192–85, 63 FR 37503, July 13, 1998; Amdt. 192–98, 69 FR 48406, Aug. 10, 2004]

§ 192.328 Additional construction requirements for steel pipe using alternative maximum allowable operating pressure.

For a new or existing pipeline segment to be eligible for operation at the alternative maximum allowable operating pressure calculated under § 192.620, a segment must meet the following additional construction requirements. Records must be maintained, for the useful life of the pipeline, demonstrating compliance with these requirements:

To address this construction issue:	The pipeline segment must meet this additional construction requirement:
(a) Quality assurance	(1) The construction of the pipeline segment must be done under a quality assurance plan addressing pipe inspection, hauling and stringing, field bending, welding, non-destructive examination of girth welds, applying and testing field applied coating, lowering of the pipeline into the ditch, padding and backfilling, and hydrostatic testing. (2) The quality assurance plan for applying and testing field applied coating to girth welds must be: (i) Equivalent to that required under § 192.112(f)(3) for pipe; and (ii) Performed by an individual with the knowledge, skills, and ability to assure effective coating application.
(b) Girth welds	(1) All girth welds on a new pipeline segment must be non-destructively examined in accordance with § 192.243(b) and (c).
(c) Depth of cover	(1) Notwithstanding any lesser depth of cover otherwise allowed in § 192.327, there must be at least 36 inches (914 millimeters) of cover or equivalent means to protect the pipeline from outside force damage. (2) In areas where deep tilling or other activities could threaten the pipeline, the top of the pipeline must be installed at least one foot below the deepest expected penetration of the soil.
(d) Initial strength testing	(1) The pipeline segment must not have experienced failures indicative of systemic material defects during strength testing, including initial hydrostatic testing. A root cause analysis, including metallurgical examination of the failed pipe, must be performed for any failure experienced to verify that it is not indicative of a systemic concern. The results of this root cause analysis must be reported to each PHMSA pipeline safety regional office where the pipe is in service at least 60 days prior to operating at the alternative MAOP. An operator must also notify a State pipeline safety authority when the pipeline is located in a State where PHMSA has an interstate agent agreement, or an intrastate pipeline is regulated by that State.
(e) Interference currents	(1) For a new pipeline segment, the construction must address the impacts of induced alternating current from parallel electric transmission lines and other known sources of potential interference with corrosion control.

[72 FR 62176, Oct. 17, 2008]

Subpart H—Customer Meters, Service Regulators, and Service Lines

§ 192.351 Scope.

This subpart prescribes minimum requirements for installing customer meters, service regulators, service lines, service line valves, and service line connections to mains.

§ 192.353 Customer meters and regulators: Location.

(a) Each meter and service regulator, whether inside or outside a building, must be installed in a readily accessible location and be protected from corrosion and other damage, including, if installed outside a building, vehicular damage that may be anticipated. However, the upstream regulator in a series may be buried.

(b) Each service regulator installed within a building must be located as near as practical to the point of service line entrance.

(c) Each meter installed within a building must be located in a ventilated place and not less than 3 feet (914 millimeters) from any source of ignition or any source of heat which might damage the meter.

(d) Where feasible, the upstream regulator in a series must be located outside the building, unless it is located in a separate metering or regulating building.

[35 FR 13257, Aug. 19, 1970, as amended by Amdt. 192–85, 63 FR 37503, July 13, 1998; Amdt. 192–93, 68 FR 53900, Sept. 15, 2003]

§ 192.355 Customer meters and regulators: Protection from damage.

(a) *Protection from vacuum or back pressure.* If the customer's equipment might create either a vacuum or a back pressure, a device must be installed to protect the system.

(b) *Service regulator vents and relief vents.* Service regulator vents and relief vents must terminate outdoors, and the outdoor terminal must—

(1) Be rain and insect resistant;

(2) Be located at a place where gas from the vent can escape freely into the atmosphere and away from any opening into the building; and

(3) Be protected from damage caused by submergence in areas where flooding may occur.

(c) *Pits and vaults.* Each pit or vault that houses a customer meter or regulator at a place where vehicular traffic is anticipated, must be able to support that traffic.

[35 FR 13257, Aug. 19, 1970, as amended by Amdt. 192–58, 53 FR 1635, Jan. 21, 1988]

§ 192.357 Customer meters and regulators: Installation.

(a) Each meter and each regulator must be installed so as to minimize anticipated stresses upon the connecting piping and the meter.

(b) When close all-thread nipples are used, the wall thickness remaining after the threads are cut must meet the minimum wall thickness requirements of this part.

(c) Connections made of lead or other easily damaged material may not be used in the installation of meters or regulators.

(d) Each regulator that might release gas in its operation must be vented to the outside atmosphere.

§ 192.359 Customer meter installations: Operating pressure.

(a) A meter may not be used at a pressure that is more than 67 percent of the manufacturer's shell test pressure.

(b) Each newly installed meter manufactured after November 12, 1970, must have been tested to a minimum of 10 p.s.i. (69 kPa) gage.

(c) A rebuilt or repaired tinned steel case meter may not be used at a pressure that is more than 50 percent of the pressure used to test the meter after rebuilding or repairing.

[35 FR 13257, Aug. 19, 1970, as amended by Amdt. 192–1, 35 FR 17660, Nov. 17, 1970; Amdt. 192–85, 63 FR 37503, July 13, 1998]

§ 192.361 Service lines: Installation.

(a) *Depth.* Each buried service line must be installed with at least 12 inches (305 millimeters) of cover in private property and at least 18 inches (457 millimeters) of cover in streets and roads. However, where an underground structure prevents installation at those depths, the service line must be

able to withstand any anticipated external load.

(b) *Support and backfill.* Each service line must be properly supported on undisturbed or well-compacted soil, and material used for backfill must be free of materials that could damage the pipe or its coating.

(c) *Grading for drainage.* Where condensate in the gas might cause interruption in the gas supply to the customer, the service line must be graded so as to drain into the main or into drips at the low points in the service line.

(d) *Protection against piping strain and external loading.* Each service line must be installed so as to minimize anticipated piping strain and external loading.

(e) *Installation of service lines into buildings.* Each underground service line installed below grade through the outer foundation wall of a building must:

(1) In the case of a metal service line, be protected against corrosion;

(2) In the case of a plastic service line, be protected from shearing action and backfill settlement; and

(3) Be sealed at the foundation wall to prevent leakage into the building.

(f) *Installation of service lines under buildings.* Where an underground service line is installed under a building:

(1) It must be encased in a gas tight conduit;

(2) The conduit and the service line must, if the service line supplies the building it underlies, extend into a normally usable and accessible part of the building; and

(3) The space between the conduit and the service line must be sealed to prevent gas leakage into the building and, if the conduit is sealed at both ends, a vent line from the annular space must extend to a point where gas would not be a hazard, and extend above grade, terminating in a rain and insect resistant fitting.

(g) *Locating underground service lines.* Each underground nonmetallic service line that is not encased must have a means of locating the pipe that complies with § 192.321(e).

[35 FR 13257, Aug. 19, 1970, as amended by Amdt. 192–75, 61 FR 18517, Apr. 26, 1996; Amdt. 192–85, 63 FR 37503, July 13, 1998; Amdt. 192–93, 68 FR 53900, Sept. 15, 2003]

§ 192.363 Service lines: Valve requirements.

(a) Each service line must have a service-line valve that meets the applicable requirements of subparts B and D of this part. A valve incorporated in a meter bar, that allows the meter to be bypassed, may not be used as a service-line valve.

(b) A soft seat service line valve may not be used if its ability to control the flow of gas could be adversely affected by exposure to anticipated heat.

(c) Each service-line valve on a high-pressure service line, installed above ground or in an area where the blowing of gas would be hazardous, must be designed and constructed to minimize the possibility of the removal of the core of the valve with other than specialized tools.

§ 192.365 Service lines: Location of valves.

(a) *Relation to regulator or meter.* Each service-line valve must be installed upstream of the regulator or, if there is no regulator, upstream of the meter.

(b) *Outside valves.* Each service line must have a shut-off valve in a readily accessible location that, if feasible, is outside of the building.

(c) *Underground valves.* Each underground service-line valve must be located in a covered durable curb box or standpipe that allows ready operation of the valve and is supported independently of the service lines.

§ 192.367 Service lines: General requirements for connections to main piping.

(a) *Location.* Each service line connection to a main must be located at the top of the main or, if that is not practical, at the side of the main, unless a suitable protective device is installed to minimize the possibility of dust and moisture being carried from the main into the service line.

(b) *Compression-type connection to main*. Each compression-type service line to main connection must:

(1) Be designed and installed to effectively sustain the longitudinal pull-out or thrust forces caused by contraction or expansion of the piping, or by anticipated external or internal loading; and

(2) If gaskets are used in connecting the service line to the main connection fitting, have gaskets that are compatible with the kind of gas in the system.

[35 FR 13257, Aug. 19, 1970, as amended by Amdt. 192–75, 61 FR 18517, Apr. 26, 1996]

§ 192.369 Service lines: Connections to cast iron or ductile iron mains.

(a) Each service line connected to a cast iron or ductile iron main must be connected by a mechanical clamp, by drilling and tapping the main, or by another method meeting the requirements of § 192.273.

(b) If a threaded tap is being inserted, the requirements of § 192.151 (b) and (c) must also be met.

§ 192.371 Service lines: Steel.

Each steel service line to be operated at less than 100 p.s.i. (689 kPa) gage must be constructed of pipe designed for a minimum of 100 p.s.i. (689 kPa) gage.

[Amdt. 192–1, 35 FR 17660, Nov. 17, 1970, as amended by Amdt. 192–85, 63 FR 37503, July 13, 1998]

§ 192.373 Service lines: Cast iron and ductile iron.

(a) Cast or ductile iron pipe less than 6 inches (152 millimeters) in diameter may not be installed for service lines.

(b) If cast iron pipe or ductile iron pipe is installed for use as a service line, the part of the service line which extends through the building wall must be of steel pipe.

(c) A cast iron or ductile iron service line may not be installed in unstable soil or under a building.

[35 FR 13257, Aug. 19, 1970, as amended by Amdt. 192–85, 63 FR 37503, July 13, 1998]

§ 192.375 Service lines: Plastic.

(a) Each plastic service line outside a building must be installed below ground level, except that—

(1) It may be installed in accordance with § 192.321(g); and

(2) It may terminate above ground level and outside the building, if—

(i) The above ground level part of the plastic service line is protected against deterioration and external damage; and

(ii) The plastic service line is not used to support external loads.

(b) Each plastic service line inside a building must be protected against external damage.

[35 FR 13257, Aug. 19, 1970, as amended by Amdt. 192–78, 61 FR 28785, June 6, 1996]

§ 192.377 Service lines: Copper.

Each copper service line installed within a building must be protected against external damage.

§ 192.379 New service lines not in use.

Each service line that is not placed in service upon completion of installation must comply with one of the following until the customer is supplied with gas:

(a) The valve that is closed to prevent the flow of gas to the customer must be provided with a locking device or other means designed to prevent the opening of the valve by persons other than those authorized by the operator.

(b) A mechanical device or fitting that will prevent the flow of gas must be installed in the service line or in the meter assembly.

(c) The customer's piping must be physically disconnected from the gas supply and the open pipe ends sealed.

[Amdt. 192–8, 37 FR 20694, Oct. 3, 1972]

§ 192.381 Service lines: Excess flow valve performance standards.

(a) Excess flow valves to be used on single residence service lines that operate continuously throughout the year at a pressure not less than 10 p.s.i. (69 kPa) gage must be manufactured and tested by the manufacturer according to an industry specification, or the manufacturer's written specification, to ensure that each valve will:

(1) Function properly up to the maximum operating pressure at which the valve is rated;

(2) Function properly at all temperatures reasonably expected in the operating environment of the service line;

(3) At 10 p.s.i. (69 kPa) gage:

(i) Close at, or not more than 50 percent above, the rated closure flow rate specified by the manufacturer; and

(ii) Upon closure, reduce gas flow—

(A) For an excess flow valve designed to allow pressure to equalize across the valve, to no more than 5 percent of the manufacturer's specified closure flow rate, up to a maximum of 20 cubic feet per hour (0.57 cubic meters per hour); or

(B) For an excess flow valve designed to prevent equalization of pressure across the valve, to no more than 0.4 cubic feet per hour (.01 cubic meters per hour); and

(4) Not close when the pressure is less than the manufacturer's minimum specified operating pressure and the flow rate is below the manufacturer's minimum specified closure flow rate.

(b) An excess flow valve must meet the applicable requirements of Subparts B and D of this part.

(c) An operator must mark or otherwise identify the presence of an excess flow valve in the service line.

(d) An operator shall locate an excess flow valve as near as practical to the fitting connecting the service line to its source of gas supply.

(e) An operator should not install an excess flow valve on a service line where the operator has prior experience with contaminants in the gas stream, where these contaminants could be expected to cause the excess flow valve to malfunction or where the excess flow valve would interfere with necessary operation and maintenance activities on the service, such as blowing liquids from the line.

[Amdt. 192–79, 61 FR 31459, June 20, 1996, as amended by Amdt. 192–80, 62 FR 2619, Jan. 17, 1997; Amdt. 192–85, 63 FR 37504, July 13, 1998]

§ 192.383 Excess flow valve installation.

(a) Definitions. As used in this section:

Replaced service line means a gas service line where the fitting that connects the service line to the main is replaced or the piping connected to this fitting is replaced.

Service line serving single-family residence means a gas service line that begins at the fitting that connects the service line to the main and serves only one single-family residence.

(b) *Installation required*. An excess flow valve (EFV) installation must comply with the performance standards in § 192.381. The operator must install an EFV on any new or replaced service line serving a single-family residence after February 12, 2010, unless one or more of the following conditions is present:

(1) The service line does not operate at a pressure of 10 psig or greater throughout the year;

(2) The operator has prior experience with contaminants in the gas stream that could interfere with the EFV's operation or cause loss of service to a residence;

(3) An EFV could interfere with necessary operation or maintenance activities, such as blowing liquids from the line; or

(4) An EFV meeting performance standards in § 192.381 is not commercially available to the operator.

(c) *Reporting*. Each operator must report the EFV measures detailed in the annual report required by § 191.11.

[Amdt. 192–113, 74 FR 63934, Dec. 4, 2009, as amended at 75 FR 5244, Feb. 2, 2010; 76 FR 5499, Feb. 1, 2011]

Subpart I—Requirements for Corrosion Control

SOURCE: Amdt. 192–4, 36 FR 12302, June 30, 1971, unless otherwise noted.

§ 192.451 Scope.

(a) This subpart prescribes minimum requirements for the protection of metallic pipelines from external, internal, and atmospheric corrosion.

(b) [Reserved]

[Amdt. 192–4, 36 FR 12302, June 30, 1971, as amended by Amdt. 192–27, 41 FR 34606, Aug. 16, 1976; Amdt. 192–33, 43 FR 39389, Sept. 5, 1978]

§ 192.452 How does this subpart apply to converted pipelines and regulated onshore gathering lines?

(a) *Converted pipelines*. Notwithstanding the date the pipeline was installed or any earlier deadlines for

compliance, each pipeline which qualifies for use under this part in accordance with § 192.14 must meet the requirements of this subpart specifically applicable to pipelines installed before August 1, 1971, and all other applicable requirements within 1 year after the pipeline is readied for service. However, the requirements of this subpart specifically applicable to pipelines installed after July 31, 1971, apply if the pipeline substantially meets those requirements before it is readied for service or it is a segment which is replaced, relocated, or substantially altered.

(b) *Regulated onshore gathering lines.* For any regulated onshore gathering line under § 192.9 existing on April 14, 2006, that was not previously subject to this part, and for any onshore gathering line that becomes a regulated onshore gathering line under § 192.9 after April 14, 2006, because of a change in class location or increase in dwelling density:

(1) The requirements of this subpart specifically applicable to pipelines installed before August 1, 1971, apply to the gathering line regardless of the date the pipeline was actually installed; and

(2) The requirements of this subpart specifically applicable to pipelines installed after July 31, 1971, apply only if the pipeline substantially meets those requirements.

[Amdt. 192–30, 42 FR 60148, Nov. 25, 1977, as amended by Amdt. 192–102, 71 FR 13303, Mar. 15, 2006]

§ 192.453 General.

The corrosion control procedures required by § 192.605(b)(2), including those for the design, installation, operation, and maintenance of cathodic protection systems, must be carried out by, or under the direction of, a person qualified in pipeline corrosion control methods.

[Amdt. 192–71, 59 FR 6584, Feb. 11, 1994]

§ 192.455 External corrosion control: Buried or submerged pipelines installed after July 31, 1971.

(a) Except as provided in paragraphs (b), (c), and (f) of this section, each buried or submerged pipeline installed after July 31, 1971, must be protected against external corrosion, including the following:

(1) It must have an external protective coating meeting the requirements of § 192.461.

(2) It must have a cathodic protection system designed to protect the pipeline in accordance with this subpart, installed and placed in operation within 1 year after completion of construction.

(b) An operator need not comply with paragraph (a) of this section, if the operator can demonstrate by tests, investigation, or experience in the area of application, including, as a minimum, soil resistivity measurements and tests for corrosion accelerating bacteria, that a corrosive environment does not exist. However, within 6 months after an installation made pursuant to the preceding sentence, the operator shall conduct tests, including pipe-to-soil potential measurements with respect to either a continuous reference electrode or an electrode using close spacing, not to exceed 20 feet (6 meters), and soil resistivity measurements at potential profile peak locations, to adequately evaluate the potential profile along the entire pipeline. If the tests made indicate that a corrosive condition exists, the pipeline must be cathodically protected in accordance with paragraph (a)(2) of this section.

(c) An operator need not comply with paragraph (a) of this section, if the operator can demonstrate by tests, investigation, or experience that—

(1) For a copper pipeline, a corrosive environment does not exist; or

(2) For a temporary pipeline with an operating period of service not to exceed 5 years beyond installation, corrosion during the 5-year period of service of the pipeline will not be detrimental to public safety.

(d) Notwithstanding the provisions of paragraph (b) or (c) of this section, if a pipeline is externally coated, it must be cathodically protected in accordance with paragraph (a)(2) of this section.

(e) Aluminum may not be installed in a buried or submerged pipeline if that aluminum is exposed to an environment with a natural pH in excess of 8, unless tests or experience indicate its

suitability in the particular environment involved.

(f) This section does not apply to electrically isolated, metal alloy fittings in plastic pipelines, if:

(1) For the size fitting to be used, an operator can show by test, investigation, or experience in the area of application that adequate corrosion control is provided by the alloy composition; and

(2) The fitting is designed to prevent leakage caused by localized corrosion pitting.

[Amdt. 192–4, 36 FR 12302, June 30, 1971, as amended at Amdt. 192–28, 42 FR 35654, July 11, 1977; Amdt. 192–39, 47 FR 9844, Mar. 8, 1982; Amdt. 192–78, 61 FR 28785, June 6, 1996; Amdt. 192–85, 63 FR 37504, July 13, 1998]

§ 192.457 External corrosion control: Buried or submerged pipelines installed before August 1, 1971.

(a) Except for buried piping at compressor, regulator, and measuring stations, each buried or submerged transmission line installed before August 1, 1971, that has an effective external coating must be cathodically protected along the entire area that is effectively coated, in accordance with this subpart. For the purposes of this subpart, a pipeline does not have an effective external coating if its cathodic protection current requirements are substantially the same as if it were bare. The operator shall make tests to determine the cathodic protection current requirements.

(b) Except for cast iron or ductile iron, each of the following buried or submerged pipelines installed before August 1, 1971, must be cathodically protected in accordance with this subpart in areas in which active corrosion is found:

(1) Bare or ineffectively coated transmission lines.

(2) Bare or coated pipes at compressor, regulator, and measuring stations.

(3) Bare or coated distribution lines.

[Amdt. 192–4, 36 FR 12302, June 30, 1971, as amended by Amdt. 192–33, 43 FR 39390, Sept. 5, 1978; Amdt. 192–93, 68 FR 53900, Sept. 15, 2003]

§ 192.459 External corrosion control: Examination of buried pipeline when exposed.

Whenever an operator has knowledge that any portion of a buried pipeline is exposed, the exposed portion must be examined for evidence of external corrosion if the pipe is bare, or if the coating is deteriorated. If external corrosion requiring remedial action under §§ 192.483 through 192.489 is found, the operator shall investigate circumferentially and longitudinally beyond the exposed portion (by visual examination, indirect method, or both) to determine whether additional corrosion requiring remedial action exists in the vicinity of the exposed portion.

[Amdt. 192–87, 64 FR 56981, Oct. 22, 1999]

§ 192.461 External corrosion control: Protective coating.

(a) Each external protective coating, whether conductive or insulating, applied for the purpose of external corrosion control must—

(1) Be applied on a properly prepared surface;

(2) Have sufficient adhesion to the metal surface to effectively resist underfilm migration of moisture;

(3) Be sufficiently ductile to resist cracking;

(4) Have sufficient strength to resist damage due to handling and soil stress; and

(5) Have properties compatible with any supplemental cathodic protection.

(b) Each external protective coating which is an electrically insulating type must also have low moisture absorption and high electrical resistance.

(c) Each external protective coating must be inspected just prior to lowering the pipe into the ditch and backfilling, and any damage detrimental to effective corrosion control must be repaired.

(d) Each external protective coating must be protected from damage resulting from adverse ditch conditions or damage from supporting blocks.

(e) If coated pipe is installed by boring, driving, or other similar method, precautions must be taken to minimize damage to the coating during installation.

§ 192.463 External corrosion control: Cathodic protection.

(a) Each cathodic protection system required by this subpart must provide a level of cathodic protection that complies with one or more of the applicable criteria contained in appendix D of this part. If none of these criteria is applicable, the cathodic protection system must provide a level of cathodic protection at least equal to that provided by compliance with one or more of these criteria.

(b) If amphoteric metals are included in a buried or submerged pipeline containing a metal of different anodic potential—

(1) The amphoteric metals must be electrically isolated from the remainder of the pipeline and cathodically protected; or

(2) The entire buried or submerged pipeline must be cathodically protected at a cathodic potential that meets the requirements of appendix D of this part for amphoteric metals.

(c) The amount of cathodic protection must be controlled so as not to damage the protective coating or the pipe.

§ 192.465 External corrosion control: Monitoring.

(a) Each pipeline that is under cathodic protection must be tested at least once each calendar year, but with intervals not exceeding 15 months, to determine whether the cathodic protection meets the requirements of § 192.463. However, if tests at those intervals are impractical for separately protected short sections of mains or transmission lines, not in excess of 100 feet (30 meters), or separately protected service lines, these pipelines may be surveyed on a sampling basis. At least 10 percent of these protected structures, distributed over the entire system must be surveyed each calendar year, with a different 10 percent checked each subsequent year, so that the entire system is tested in each 10–year period.

(b) Each cathodic protection rectifier or other impressed current power source must be inspected six times each calendar year, but with intervals not exceeding 2½ months, to insure that it is operating.

(c) Each reverse current switch, each diode, and each interference bond whose failure would jeopardize structure protection must be electrically checked for proper performance six times each calendar year, but with intervals not exceeding 2½ months. Each other interference bond must be checked at least once each calendar year, but with intervals not exceeding 15 months.

(d) Each operator shall take prompt remedial action to correct any deficiencies indicated by the monitoring.

(e) After the initial evaluation required by §§ 192.455(b) and (c) and 192.457(b), each operator must, not less than every 3 years at intervals not exceeding 39 months, reevaluate its unprotected pipelines and cathodically protect them in accordance with this subpart in areas in which active corrosion is found. The operator must determine the areas of active corrosion by electrical survey. However, on distribution lines and where an electrical survey is impractical on transmission lines, areas of active corrosion may be determined by other means that include review and analysis of leak repair and inspection records, corrosion monitoring records, exposed pipe inspection records, and the pipeline environment.

[Amdt. 192–4, 36 FR 12302, June 30, 1971, as amended by Amdt. 192–33, 43 FR 39390, Sept. 5, 1978; Amdt. 192–35A, 45 FR 23441, Apr. 7, 1980; Amdt. 192–85, 63 FR 37504, July 13, 1998; Amdt. 192–93, 68 FR 53900, Sept. 15, 2003; Amdt. 192–114, 75 FR 48603, Aug. 11, 2010]

§ 192.467 External corrosion control: Electrical isolation.

(a) Each buried or submerged pipeline must be electrically isolated from other underground metallic structures, unless the pipeline and the other structures are electrically interconnected and cathodically protected as a single unit.

(b) One or more insulating devices must be installed where electrical isolation of a portion of a pipeline is necessary to facilitate the application of corrosion control.

(c) Except for unprotected copper inserted in ferrous pipe, each pipeline

must be electrically isolated from metallic casings that are a part of the underground system. However, if isolation is not achieved because it is impractical, other measures must be taken to minimize corrosion of the pipeline inside the casing.

(d) Inspection and electrical tests must be made to assure that electrical isolation is adequate.

(e) An insulating device may not be installed in an area where a combustible atmosphere is anticipated unless precautions are taken to prevent arcing.

(f) Where a pipeline is located in close proximity to electrical transmission tower footings, ground cables or counterpoise, or in other areas where fault currents or unusual risk of lightning may be anticipated, it must be provided with protection against damage due to fault currents or lightning, and protective measures must also be taken at insulating devices.

[Amdt. 192–4, 36 FR 12302, June 30, 1971, as amended by Amdt. 192–33, 43 FR 39390, Sept. 5, 1978]

§ 192.469 External corrosion control: Test stations.

Each pipeline under cathodic protection required by this subpart must have sufficient test stations or other contact points for electrical measurement to determine the adequacy of cathodic protection.

[Amdt. 192–27, 41 FR 34606, Aug. 16, 1976]

§ 192.471 External corrosion control: Test leads.

(a) Each test lead wire must be connected to the pipeline so as to remain mechanically secure and electrically conductive.

(b) Each test lead wire must be attached to the pipeline so as to minimize stress concentration on the pipe.

(c) Each bared test lead wire and bared metallic area at point of connection to the pipeline must be coated with an electrical insulating material compatible with the pipe coating and the insulation on the wire.

§ 192.473 External corrosion control: Interference currents.

(a) Each operator whose pipeline system is subjected to stray currents shall have in effect a continuing program to minimize the detrimental effects of such currents.

(b) Each impressed current type cathodic protection system or galvanic anode system must be designed and installed so as to minimize any adverse effects on existing adjacent underground metallic structures.

[Amdt. 192–4, 36 FR 12302, June 30, 1971, as amended by Amdt. 192–33, 43 FR 39390, Sept. 5, 1978]

§ 192.475 Internal corrosion control: General.

(a) Corrosive gas may not be transported by pipeline, unless the corrosive effect of the gas on the pipeline has been investigated and steps have been taken to minimize internal corrosion.

(b) Whenever any pipe is removed from a pipeline for any reason, the internal surface must be inspected for evidence of corrosion. If internal corrosion is found—

(1) The adjacent pipe must be investigated to determine the extent of internal corrosion;

(2) Replacement must be made to the extent required by the applicable paragraphs of §§ 192.485, 192.487, or 192.489; and

(3) Steps must be taken to minimize the internal corrosion.

(c) Gas containing more than 0.25 grain of hydrogen sulfide per 100 cubic feet (5.8 milligrams/m^{3}) at standard conditions (4 parts per million) may not be stored in pipe-type or bottle-type holders.

[Amdt. 192–4, 36 FR 12302, June 30, 1971, as amended by Amdt. 192–33, 43 FR 39390, Sept. 5, 1978; Amdt. 192–78, 61 FR 28785, June 6, 1996; Amdt. 192–85, 63 FR 37504, July 13, 1998]

§ 192.476 Internal corrosion control: Design and construction of transmission line.

(a) *Design and construction.* Except as provided in paragraph (b) of this section, each new transmission line and each replacement of line pipe, valve, fitting, or other line component in a transmission line must have features incorporated into its design and construction to reduce the risk of internal corrosion. At a minimum, unless it is impracticable or unnecessary to do so,

each new transmission line or replacement of line pipe, valve, fitting, or other line component in a transmission line must:

(1) Be configured to reduce the risk that liquids will collect in the line;

(2) Have effective liquid removal features whenever the configuration would allow liquids to collect; and

(3) Allow use of devices for monitoring internal corrosion at locations with significant potential for internal corrosion.

(b) *Exceptions to applicability*. The design and construction requirements of paragraph (a) of this section do not apply to the following:

(1) Offshore pipeline; and

(2) Pipeline installed or line pipe, valve, fitting or other line component replaced before May 23, 2007.

(c) *Change to existing transmission line*. When an operator changes the configuration of a transmission line, the operator must evaluate the impact of the change on internal corrosion risk to the downstream portion of an existing onshore transmission line and provide for removal of liquids and monitoring of internal corrosion as appropriate.

(d) *Records*. An operator must maintain records demonstrating compliance with this section. Provided the records show why incorporating design features addressing paragraph (a)(1), (a)(2), or (a)(3) of this section is impracticable or unnecessary, an operator may fulfill this requirement through written procedures supported by as-built drawings or other construction records.

[72 FR 20059, Apr. 23, 2007]

§ 192.477 Internal corrosion control: Monitoring.

If corrosive gas is being transported, coupons or other suitable means must be used to determine the effectiveness of the steps taken to minimize internal corrosion. Each coupon or other means of monitoring internal corrosion must be checked two times each calendar year, but with intervals not exceeding 7½ months.

[Amdt. 192–33, 43 FR 39390, Sept. 5, 1978]

§ 192.479 Atmospheric corrosion control: General.

(a) Each operator must clean and coat each pipeline or portion of pipeline that is exposed to the atmosphere, except pipelines under paragraph (c) of this section.

(b) Coating material must be suitable for the prevention of atmospheric corrosion.

(c) Except portions of pipelines in offshore splash zones or soil-to-air interfaces, the operator need not protect from atmospheric corrosion any pipeline for which the operator demonstrates by test, investigation, or experience appropriate to the environment of the pipeline that corrosion will—

(1) Only be a light surface oxide; or

(2) Not affect the safe operation of the pipeline before the next scheduled inspection.

[Amdt. 192–93, 68 FR 53901, Sept. 15, 2003]

§ 192.481 Atmospheric corrosion control: Monitoring.

(a) Each operator must inspect each pipeline or portion of pipeline that is exposed to the atmosphere for evidence of atmospheric corrosion, as follows:

If the pipeline is located:	Then the frequency of inspection is:
Onshore	At least once every 3 calendar years, but with intervals not exceeding 39 months
Offshore	At least once each calendar year, but with intervals not exceeding 15 months

(b) During inspections the operator must give particular attention to pipe at soil-to-air interfaces, under thermal insulation, under disbonded coatings, at pipe supports, in splash zones, at deck penetrations, and in spans over water.

(c) If atmospheric corrosion is found during an inspection, the operator must provide protection against the corrosion as required by § 192.479.

[Amdt. 192–93, 68 FR 53901, Sept. 15, 2003]

§ 192.483 Remedial measures: General.

(a) Each segment of metallic pipe that replaces pipe removed from a buried or submerged pipeline because of

external corrosion must have a properly prepared surface and must be provided with an external protective coating that meets the requirements of § 192.461.

(b) Each segment of metallic pipe that replaces pipe removed from a buried or submerged pipeline because of external corrosion must be cathodically protected in accordance with this subpart.

(c) Except for cast iron or ductile iron pipe, each segment of buried or submerged pipe that is required to be repaired because of external corrosion must be cathodically protected in accordance with this subpart.

§ 192.485 Remedial measures: Transmission lines.

(a) *General corrosion.* Each segment of transmission line with general corrosion and with a remaining wall thickness less than that required for the MAOP of the pipeline must be replaced or the operating pressure reduced commensurate with the strength of the pipe based on actual remaining wall thickness. However, corroded pipe may be repaired by a method that reliable engineering tests and analyses show can permanently restore the serviceability of the pipe. Corrosion pitting so closely grouped as to affect the overall strength of the pipe is considered general corrosion for the purpose of this paragraph.

(b) *Localized corrosion pitting.* Each segment of transmission line pipe with localized corrosion pitting to a degree where leakage might result must be replaced or repaired, or the operating pressure must be reduced commensurate with the strength of the pipe, based on the actual remaining wall thickness in the pits.

(c) Under paragraphs (a) and (b) of this section, the strength of pipe based on actual remaining wall thickness may be determined by the procedure in ASME/ANSI B31G or the procedure in AGA Pipeline Research Committee Project PR 3–805 (with RSTRENG disk). Both procedures apply to corroded regions that do not penetrate the pipe wall, subject to the limitations prescribed in the procedures.

[Amdt. 192–4, 36 FR 12302, June 30, 1971, as amended by Amdt. 192–33, 43 FR 39390, Sept. 5, 1978; Amdt. 192–78, 61 FR 28785, June 6, 1996; Amdt. 192–88, 64 FR 69664, Dec. 14, 1999]

§ 192.487 Remedial measures: Distribution lines other than cast iron or ductile iron lines.

(a) *General corrosion.* Except for cast iron or ductile iron pipe, each segment of generally corroded distribution line pipe with a remaining wall thickness less than that required for the MAOP of the pipeline, or a remaining wall thickness less than 30 percent of the nominal wall thickness, must be replaced. However, corroded pipe may be repaired by a method that reliable engineering tests and analyses show can permanently restore the serviceability of the pipe. Corrosion pitting so closely grouped as to affect the overall strength of the pipe is considered general corrosion for the purpose of this paragraph.

(b) *Localized corrosion pitting.* Except for cast iron or ductile iron pipe, each segment of distribution line pipe with localized corrosion pitting to a degree where leakage might result must be replaced or repaired.

[Amdt. 192–4, 36 FR 12302, June 30, 1971, as amended by Amdt. 192–88, 64 FR 69665, Dec. 14, 1999]

§ 192.489 Remedial measures: Cast iron and ductile iron pipelines.

(a) *General graphitization.* Each segment of cast iron or ductile iron pipe on which general graphitization is found to a degree where a fracture or any leakage might result, must be replaced.

(b) *Localized graphitization.* Each segment of cast iron or ductile iron pipe on which localized graphitization is found to a degree where any leakage might result, must be replaced or repaired, or sealed by internal sealing methods adequate to prevent or arrest any leakage.

§ 192.490 Direct assessment.

Each operator that uses direct assessment as defined in § 192.903 on an onshore transmission line made primarily of steel or iron to evaluate the

effects of a threat in the first column must carry out the direct assessment according to the standard listed in the second column. These standards do not apply to methods associated with direct assessment, such as close interval surveys, voltage gradient surveys, or examination of exposed pipelines, when used separately from the direct assessment process.

Threat	Standard [1]
External corrosion	§ 192.925 [2]
Internal corrosion in pipelines that transport dry gas.	§ 192.927
Stress corrosion cracking	§ 192.929

[1] For lines not subject to subpart O of this part, the terms "covered segment" and "covered pipeline segment" in §§ 192.925, 192.927, and 192.929 refer to the pipeline segment on which direct assessment is performed.

[2] In § 192.925(b), the provision regarding detection of coating damage applies only to pipelines subject to subpart O of this part.

[Amdt. 192–101, 70 FR 61575, Oct. 25, 2005]

§ 192.491 Corrosion control records.

(a) Each operator shall maintain records or maps to show the location of cathodically protected piping, cathodic protection facilities, galvanic anodes, and neighboring structures bonded to the cathodic protection system. Records or maps showing a stated number of anodes, installed in a stated manner or spacing, need not show specific distances to each buried anode.

(b) Each record or map required by paragraph (a) of this section must be retained for as long as the pipeline remains in service.

(c) Each operator shall maintain a record of each test, survey, or inspection required by this subpart in sufficient detail to demonstrate the adequacy of corrosion control measures or that a corrosive condition does not exist. These records must be retained for at least 5 years, except that records related to §§ 192.465 (a) and (e) and 192.475(b) must be retained for as long as the pipeline remains in service.

[Amdt. 192–78, 61 FR 28785, June 6, 1996]

Subpart J—Test Requirements

§ 192.501 Scope.

This subpart prescribes minimum leak-test and strength-test requirements for pipelines.

§ 192.503 General requirements.

(a) No person may operate a new segment of pipeline, or return to service a segment of pipeline that has been relocated or replaced, until—

(1) It has been tested in accordance with this subpart and § 192.619 to substantiate the maximum allowable operating pressure; and

(2) Each potentially hazardous leak has been located and eliminated.

(b) The test medium must be liquid, air, natural gas, or inert gas that is—

(1) Compatible with the material of which the pipeline is constructed;

(2) Relatively free of sedimentary materials; and

(3) Except for natural gas, nonflammable.

(c) Except as provided in § 192.505(a), if air, natural gas, or inert gas is used as the test medium, the following maximum hoop stress limitations apply:

Class location	Maximum hoop stress allowed as percentage of SMYS	
	Natural gas	Air or inert gas
1	80	80
2	30	75
3	30	50
4	30	40

(d) Each joint used to tie in a test segment of pipeline is excepted from the specific test requirements of this subpart, but each non-welded joint must be leak tested at not less than its operating pressure.

[35 FR 13257, Aug. 19, 1970, as amended by Amdt. 192–58, 53 FR 1635, Jan. 21, 1988; Amdt. 192–60, 53 FR 36029, Sept. 16, 1988; Amdt. 192–60A, 54 FR 5485, Feb. 3, 1989]

§ 192.505 Strength test requirements for steel pipeline to operate at a hoop stress of 30 percent or more of SMYS.

(a) Except for service lines, each segment of a steel pipeline that is to operate at a hoop stress of 30 percent or more of SMYS must be strength tested in accordance with this section to substantiate the proposed maximum allowable operating pressure. In addition, in a Class 1 or Class 2 location, if there is a building intended for human occupancy within 300 feet (91 meters) of a pipeline, a hydrostatic test must be conducted to a test pressure of at least 125 percent of maximum operating

pressure on that segment of the pipeline within 300 feet (91 meters) of such a building, but in no event may the test section be less than 600 feet (183 meters) unless the length of the newly installed or relocated pipe is less than 600 feet (183 meters). However, if the buildings are evacuated while the hoop stress exceeds 50 percent of SMYS, air or inert gas may be used as the test medium.

(b) In a Class 1 or Class 2 location, each compressor station regulator station, and measuring station, must be tested to at least Class 3 location test requirements.

(c) Except as provided in paragraph (e) of this section, the strength test must be conducted by maintaining the pressure at or above the test pressure for at least 8 hours.

(d) If a component other than pipe is the only item being replaced or added to a pipeline, a strength test after installation is not required, if the manufacturer of the component certifies that—

(1) The component was tested to at least the pressure required for the pipeline to which it is being added;

(2) The component was manufactured under a quality control system that ensures that each item manufactured is at least equal in strength to a prototype and that the prototype was tested to at least the pressure required for the pipeline to which it is being added; or

(3) The component carries a pressure rating established through applicable ASME/ANSI, MSS specifications, or by unit strength calculations as described in § 192.143.

(e) For fabricated units and short sections of pipe, for which a post installation test is impractical, a pre-installation strength test must be conducted by maintaining the pressure at or above the test pressure for at least 4 hours.

[35 FR 13257, Aug. 19, 1970, as amended by Amdt. 192–85, 63 FR 37504, July 13, 1998; Amdt. 192–94, 69 FR 32895, June 14, 2004; Amdt. 195–94, 69 FR 54592, Sept. 9, 2004]

§ 192.507 Test requirements for pipelines to operate at a hoop stress less than 30 percent of SMYS and at or above 100 p.s.i. (689 kPa) gage.

Except for service lines and plastic pipelines, each segment of a pipeline that is to be operated at a hoop stress less than 30 percent of SMYS and at or above 100 p.s.i. (689 kPa) gage must be tested in accordance with the following:

(a) The pipeline operator must use a test procedure that will ensure discovery of all potentially hazardous leaks in the segment being tested.

(b) If, during the test, the segment is to be stressed to 20 percent or more of SMYS and natural gas, inert gas, or air is the test medium—

(1) A leak test must be made at a pressure between 100 p.s.i. (689 kPa) gage and the pressure required to produce a hoop stress of 20 percent of SMYS; or

(2) The line must be walked to check for leaks while the hoop stress is held at approximately 20 percent of SMYS.

(c) The pressure must be maintained at or above the test pressure for at least 1 hour.

[35 FR 13257, Aug. 19, 1970, as amended by Amdt. 192–58, 53 FR 1635, Jan. 21, 1988; Amdt. 192–85, 63 FR 37504, July 13, 1998]

§ 192.509 Test requirements for pipelines to operate below 100 p.s.i. (689 kPa) gage.

Except for service lines and plastic pipelines, each segment of a pipeline that is to be operated below 100 p.s.i. (689 kPa) gage must be leak tested in accordance with the following:

(a) The test procedure used must ensure discovery of all potentially hazardous leaks in the segment being tested.

(b) Each main that is to be operated at less than 1 p.s.i. (6.9 kPa) gage must be tested to at least 10 p.s.i. (69 kPa) gage and each main to be operated at or above 1 p.s.i. (6.9 kPa) gage must be tested to at least 90 p.s.i. (621 kPa) gage.

[35 FR 13257, Aug. 19, 1970, as amended by Amdt. 192–58, 53 FR 1635, Jan. 21, 1988; Amdt. 192–85, 63 FR 37504, July 13, 1998]

§ 192.511 Test requirements for service lines.

(a) Each segment of a service line (other than plastic) must be leak tested in accordance with this section before being placed in service. If feasible, the service line connection to the main must be included in the test; if not feasible, it must be given a leakage test at the operating pressure when placed in service.

(b) Each segment of a service line (other than plastic) intended to be operated at a pressure of at least 1 p.s.i. (6.9 kPa) gage but not more than 40 p.s.i. (276 kPa) gage must be given a leak test at a pressure of not less than 50 p.s.i. (345 kPa) gage.

(c) Each segment of a service line (other than plastic) intended to be operated at pressures of more than 40 p.s.i. (276 kPa) gage must be tested to at least 90 p.s.i. (621 kPa) gage, except that each segment of a steel service line stressed to 20 percent or more of SMYS must be tested in accordance with § 192.507 of this subpart.

[35 FR 13257, Aug. 19, 1970, as amended by Amdt. 192–74, 61 FR 18517, Apr. 26, 1996; Amdt. 192–85, 63 FR 37504, July 13, 1998]

§ 192.513 Test requirements for plastic pipelines.

(a) Each segment of a plastic pipeline must be tested in accordance with this section.

(b) The test procedure must insure discovery of all potentially hazardous leaks in the segment being tested.

(c) The test pressure must be at least 150 percent of the maximum operating pressure or 50 p.s.i. (345 kPa) gage, whichever is greater. However, the maximum test pressure may not be more than three times the pressure determined under § 192.121, at a temperature not less than the pipe temperature during the test.

(d) During the test, the temperature of thermoplastic material may not be more than 100 °F (38 °C), or the temperature at which the material's long-term hydrostatic strength has been determined under the listed specification, whichever is greater.

[35 FR 13257, Aug. 19, 1970, as amended by Amdt. 192–77, 61 FR 27793, June 3, 1996; 61 FR 45905, Aug. 30, 1996; Amdt. 192–85, 63 FR 37504, July 13, 1998]

§ 192.515 Environmental protection and safety requirements.

(a) In conducting tests under this subpart, each operator shall insure that every reasonable precaution is taken to protect its employees and the general public during the testing. Whenever the hoop stress of the segment of the pipeline being tested will exceed 50 percent of SMYS, the operator shall take all practicable steps to keep persons not working on the testing operation outside of the testing area until the pressure is reduced to or below the proposed maximum allowable operating pressure.

(b) The operator shall insure that the test medium is disposed of in a manner that will minimize damage to the environment.

§ 192.517 Records.

(a) Each operator shall make, and retain for the useful life of the pipeline, a record of each test performed under §§ 192.505 and 192.507. The record must contain at least the following information:

(1) The operator's name, the name of the operator's employee responsible for making the test, and the name of any test company used.

(2) Test medium used.

(3) Test pressure.

(4) Test duration.

(5) Pressure recording charts, or other record of pressure readings.

(6) Elevation variations, whenever significant for the particular test.

(7) Leaks and failures noted and their disposition.

(b) Each operator must maintain a record of each test required by §§ 192.509, 192.511, and 192.513 for at least 5 years.

[35 FR 13257, Aug. 19, 1970, as amended by Amdt. 192–93, 68 FR 53901, Sept. 15, 2003]

Subpart K—Uprating

§ 192.551 Scope.

This subpart prescribes minimum requirements for increasing maximum allowable operating pressures (uprating) for pipelines.

§ 192.553 General requirements.

(a) *Pressure increases.* Whenever the requirements of this subpart require that an increase in operating pressure be made in increments, the pressure must be increased gradually, at a rate that can be controlled, and in accordance with the following:

(1) At the end of each incremental increase, the pressure must be held constant while the entire segment of pipeline that is affected is checked for leaks.

(2) Each leak detected must be repaired before a further pressure increase is made, except that a leak determined not to be potentially hazardous need not be repaired, if it is monitored during the pressure increase and it does not become potentially hazardous.

(b) *Records.* Each operator who uprates a segment of pipeline shall retain for the life of the segment a record of each investigation required by this subpart, of all work performed, and of each pressure test conducted, in connection with the uprating.

(c) *Written plan.* Each operator who uprates a segment of pipeline shall establish a written procedure that will ensure that each applicable requirement of this subpart is complied with.

(d) *Limitation on increase in maximum allowable operating pressure.* Except as provided in § 192.555(c), a new maximum allowable operating pressure established under this subpart may not exceed the maximum that would be allowed under §§ 192.619 and 192.621 for a new segment of pipeline constructed of the same materials in the same location. However, when uprating a steel pipeline, if any variable necessary to determine the design pressure under the design formula (§ 192.105) is unknown, the MAOP may be increased as provided in § 192.619(a)(1).

[35 FR 13257, Aug. 10, 1970, as amended by Amdt. 192–78, 61 FR 28785, June 6, 1996; Amdt. 192–93, 68 FR 53901, Sept. 15, 2003]

§ 192.555 Uprating to a pressure that will produce a hoop stress of 30 percent or more of SMYS in steel pipelines.

(a) Unless the requirements of this section have been met, no person may subject any segment of a steel pipeline to an operating pressure that will produce a hoop stress of 30 percent or more of SMYS and that is above the established maximum allowable operating pressure.

(b) Before increasing operating pressure above the previously established maximum allowable operating pressure the operator shall:

(1) Review the design, operating, and maintenance history and previous testing of the segment of pipeline and determine whether the proposed increase is safe and consistent with the requirements of this part; and

(2) Make any repairs, replacements, or alterations in the segment of pipeline that are necessary for safe operation at the increased pressure.

(c) After complying with paragraph (b) of this section, an operator may increase the maximum allowable operating pressure of a segment of pipeline constructed before September 12, 1970, to the highest pressure that is permitted under § 192.619, using as test pressure the highest pressure to which the segment of pipeline was previously subjected (either in a strength test or in actual operation).

(d) After complying with paragraph (b) of this section, an operator that does not qualify under paragraph (c) of this section may increase the previously established maximum allowable operating pressure if at least one of the following requirements is met:

(1) The segment of pipeline is successfully tested in accordance with the requirements of this part for a new line of the same material in the same location.

(2) An increased maximum allowable operating pressure may be established for a segment of pipeline in a Class 1 location if the line has not previously been tested, and if:

(i) It is impractical to test it in accordance with the requirements of this part;

(ii) The new maximum operating pressure does not exceed 80 percent of that allowed for a new line of the same design in the same location; and

(iii) The operator determines that the new maximum allowable operating pressure is consistent with the condition of the segment of pipeline and the design requirements of this part.

(e) Where a segment of pipeline is uprated in accordance with paragraph (c) or (d)(2) of this section, the increase in pressure must be made in increments that are equal to:

(1) 10 percent of the pressure before the uprating; or

(2) 25 percent of the total pressure increase,

whichever produces the fewer number of increments.

§ 192.557 Uprating: Steel pipelines to a pressure that will produce a hoop stress less than 30 percent of SMYS: plastic, cast iron, and ductile iron pipelines.

(a) Unless the requirements of this section have been met, no person may subject:

(1) A segment of steel pipeline to an operating pressure that will produce a hoop stress less than 30 percent of SMYS and that is above the previously established maximum allowable operating pressure; or

(2) A plastic, cast iron, or ductile iron pipeline segment to an operating pressure that is above the previously established maximum allowable operating pressure.

(b) Before increasing operating pressure above the previously established maximum allowable operating pressure, the operator shall:

(1) Review the design, operating, and maintenance history of the segment of pipeline;

(2) Make a leakage survey (if it has been more than 1 year since the last survey) and repair any leaks that are found, except that a leak determined not to be potentially hazardous need not be repaired, if it is monitored during the pressure increase and it does not become potentially hazardous;

(3) Make any repairs, replacements, or alterations in the segment of pipeline that are necessary for safe operation at the increased pressure;

(4) Reinforce or anchor offsets, bends and dead ends in pipe joined by compression couplings or bell and spigot joints to prevent failure of the pipe joint, if the offset, bend, or dead end is exposed in an excavation;

(5) Isolate the segment of pipeline in which the pressure is to be increased from any adjacent segment that will continue to be operated at a lower pressure; and

(6) If the pressure in mains or service lines, or both, is to be higher than the pressure delivered to the customer, install a service regulator on each service line and test each regulator to determine that it is functioning. Pressure may be increased as necessary to test each regulator, after a regulator has been installed on each pipeline subject to the increased pressure.

(c) After complying with paragraph (b) of this section, the increase in maximum allowable operating pressure must be made in increments that are equal to 10 p.s.i. (69 kPa) gage or 25 percent of the total pressure increase, whichever produces the fewer number of increments. Whenever the requirements of paragraph (b)(6) of this section apply, there must be at least two approximately equal incremental increases.

(d) If records for cast iron or ductile iron pipeline facilities are not complete enough to determine stresses produced by internal pressure, trench loading, rolling loads, beam stresses, and other bending loads, in evaluating the level of safety of the pipeline when operating at the proposed increased pressure, the following procedures must be followed:

(1) In estimating the stresses, if the original laying conditions cannot be ascertained, the operator shall assume that cast iron pipe was supported on blocks with tamped backfill and that ductile iron pipe was laid without blocks with tamped backfill.

(2) Unless the actual maximum cover depth is known, the operator shall measure the actual cover in at least three places where the cover is most likely to be greatest and shall use the greatest cover measured.

(3) Unless the actual nominal wall thickness is known, the operator shall determine the wall thickness by cutting and measuring coupons from at least three separate pipe lengths. The coupons must be cut from pipe lengths in areas where the cover depth is most likely to be the greatest. The average of all measurements taken must be increased by the allowance indicated in the following table:

Pipe size inches (millimeters)	Allowance inches (millimeters)		
	Cast iron pipe		Ductile iron pipe
	Pit cast pipe	Centrifugally cast pipe	
3 to 8 (76 to 203)	0.075 (1.91)	0.065 (1.65)	0.065 (1.65)
10 to 12 (254 to 305)	0.08 (2.03)	0.07 (1.78)	0.07 (1.78)
14 to 24 (356 to 610)	0.08 (2.03)	0.08 (2.03)	0.075 (1.91)
30 to 42 (762 to 1067)	0.09 (2.29)	0.09 (2.29)	0.075 (1.91)
48 (1219)	0.09 (2.29)	0.09 (2.29)	0.08 (2.03)
54 to 60 (1372 to 1524)	0.09 (2.29)		

(4) For cast iron pipe, unless the pipe manufacturing process is known, the operator shall assume that the pipe is pit cast pipe with a bursting tensile strength of 11,000 p.s.i. (76 MPa) gage and a modulus of rupture of 31,000 p.s.i. (214 MPa) gage.

[35 FR 13257, Aug. 19, 1970, as amended by Amdt. 192–37, 46 FR 10160, Feb. 2, 1981; Amdt. 192–62, 54 FR 5628, Feb. 6, 1989; Amdt. 195–85, 63 FR 37504, July 13, 1998]

Subpart L—Operations

§ 192.601 Scope.

This subpart prescribes minimum requirements for the operation of pipeline facilities.

§ 192.603 General provisions.

(a) No person may operate a segment of pipeline unless it is operated in accordance with this subpart.

(b) Each operator shall keep records necessary to administer the procedures established under § 192.605.

(c) The Associate Administrator or the State Agency that has submitted a current certification under the pipeline safety laws, (49 U.S.C. 60101 *et seq.*) with respect to the pipeline facility governed by an operator's plans and procedures may, after notice and opportunity for hearing as provided in 49 CFR 190.206 or the relevant State procedures, require the operator to amend its plans and procedures as necessary to provide a reasonable level of safety.

[35 FR 13257, Aug. 19, 1970, as amended by Amdt. 192–66, 56 FR 31090, July 9, 1991; Amdt. 192–71, 59 FR 6584, Feb. 11, 1994; Amdt. 192–75, 61 FR 18517, Apr. 26, 1996; Amdt. 192–118, 78 FR 58915, Sept. 25, 2013]

§ 192.605 Procedural manual for operations, maintenance, and emergencies.

(a) *General.* Each operator shall prepare and follow for each pipeline, a manual of written procedures for conducting operations and maintenance activities and for emergency response. For transmission lines, the manual must also include procedures for handling abnormal operations. This manual must be reviewed and updated by the operator at intervals not exceeding 15 months, but at least once each calendar year. This manual must be prepared before operations of a pipeline system commence. Appropriate parts of the manual must be kept at locations where operations and maintenance activities are conducted.

(b) *Maintenance and normal operations.* The manual required by paragraph (a) of this section must include procedures for the following, if applicable, to provide safety during maintenance and operations.

(1) Operating, maintaining, and repairing the pipeline in accordance with each of the requirements of this subpart and subpart M of this part.

(2) Controlling corrosion in accordance with the operations and maintenance requirements of subpart I of this part.

(3) Making construction records, maps, and operating history available to appropriate operating personnel.

(4) Gathering of data needed for reporting incidents under Part 191 of this chapter in a timely and effective manner.

(5) Starting up and shutting down any part of the pipeline in a manner designed to assure operation within the MAOP limits prescribed by this part, plus the build-up allowed for operation

of pressure-limiting and control devices.

(6) Maintaining compressor stations, including provisions for isolating units or sections of pipe and for purging before returning to service.

(7) Starting, operating and shutting down gas compressor units.

(8) Periodically reviewing the work done by operator personnel to determine the effectiveness, and adequacy of the procedures used in normal operation and maintenance and modifying the procedures when deficiencies are found.

(9) Taking adequate precautions in excavated trenches to protect personnel from the hazards of unsafe accumulations of vapor or gas, and making available when needed at the excavation, emergency rescue equipment, including a breathing apparatus and, a rescue harness and line.

(10) Systematic and routine testing and inspection of pipe-type or bottle-type holders including—

(i) Provision for detecting external corrosion before the strength of the container has been impaired;

(ii) Periodic sampling and testing of gas in storage to determine the dew point of vapors contained in the stored gas which, if condensed, might cause internal corrosion or interfere with the safe operation of the storage plant; and

(iii) Periodic inspection and testing of pressure limiting equipment to determine that it is in safe operating condition and has adequate capacity.

(11) Responding promptly to a report of a gas odor inside or near a building, unless the operator's emergency procedures under §192.615(a)(3) specifically apply to these reports.

(12) Implementing the applicable control room management procedures required by §192.631.

(c) *Abnormal operation*. For transmission lines, the manual required by paragraph (a) of this section must include procedures for the following to provide safety when operating design limits have been exceeded:

(1) Responding to, investigating, and correcting the cause of:

(i) Unintended closure of valves or shutdowns;

(ii) Increase or decrease in pressure or flow rate outside normal operating limits;

(iii) Loss of communications;

(iv) Operation of any safety device; and

(v) Any other foreseeable malfunction of a component, deviation from normal operation, or personnel error, which may result in a hazard to persons or property.

(2) Checking variations from normal operation after abnormal operation has ended at sufficient critical locations in the system to determine continued integrity and safe operation.

(3) Notifying responsible operator personnel when notice of an abnormal operation is received.

(4) Periodically reviewing the response of operator personnel to determine the effectiveness of the procedures controlling abnormal operation and taking corrective action where deficiencies are found.

(5) The requirements of this paragraph (c) do not apply to natural gas distribution operators that are operating transmission lines in connection with their distribution system.

(d) *Safety-related condition reports*. The manual required by paragraph (a) of this section must include instructions enabling personnel who perform operation and maintenance activities to recognize conditions that potentially may be safety-related conditions that are subject to the reporting requirements of §191.23 of this subchapter.

(e) *Surveillance, emergency response, and accident investigation*. The procedures required by §§192.613(a), 192.615, and 192.617 must be included in the manual required by paragraph (a) of this section.

[Amdt. 192–71, 59 FR 6584, Feb. 11, 1994, as amended by Amdt. 192–71A, 60 FR 14381, Mar. 17, 1995; Amdt. 192–93, 68 FR 53901, Sept. 15, 2003; Amdt. 192–112, 74 FR 63327, Dec. 3, 2009]

§192.607 [Reserved]

§192.609 Change in class location: Required study.

Whenever an increase in population density indicates a change in class location for a segment of an existing steel pipeline operating at hoop stress

that is more than 40 percent of SMYS, or indicates that the hoop stress corresponding to the established maximum allowable operating pressure for a segment of existing pipeline is not commensurate with the present class location, the operator shall immediately make a study to determine:

(a) The present class location for the segment involved.

(b) The design, construction, and testing procedures followed in the original construction, and a comparison of these procedures with those required for the present class location by the applicable provisions of this part.

(c) The physical condition of the segment to the extent it can be ascertained from available records;

(d) The operating and maintenance history of the segment;

(e) The maximum actual operating pressure and the corresponding operating hoop stress, taking pressure gradient into account, for the segment of pipeline involved; and

(f) The actual area affected by the population density increase, and physical barriers or other factors which may limit further expansion of the more densely populated area.

§ 192.611 Change in class location: Confirmation or revision of maximum allowable operating pressure.

(a) If the hoop stress corresponding to the established maximum allowable operating pressure of a segment of pipeline is not commensurate with the present class location, and the segment is in satisfactory physical condition, the maximum allowable operating pressure of that segment of pipeline must be confirmed or revised according to one of the following requirements:

(1) If the segment involved has been previously tested in place for a period of not less than 8 hours:

(i) The maximum allowable operating pressure is 0.8 times the test pressure in Class 2 locations, 0.667 times the test pressure in Class 3 locations, or 0.555 times the test pressure in Class 4 locations. The corresponding hoop stress may not exceed 72 percent of the SMYS of the pipe in Class 2 locations, 60 percent of SMYS in Class 3 locations, or 50 percent of SMYS in Class 4 locations.

(ii) The alternative maximum allowable operating pressure is 0.8 times the test pressure in Class 2 locations and 0.667 times the test pressure in Class 3 locations. For pipelines operating at alternative maximum allowable pressure per § 192.620, the corresponding hoop stress may not exceed 80 percent of the SMYS of the pipe in Class 2 locations and 67 percent of SMYS in Class 3 locations.

(2) The maximum allowable operating pressure of the segment involved must be reduced so that the corresponding hoop stress is not more than that allowed by this part for new segments of pipelines in the existing class location.

(3) The segment involved must be tested in accordance with the applicable requirements of subpart J of this part, and its maximum allowable operating pressure must then be established according to the following criteria:

(i) The maximum allowable operating pressure after the requalification test is 0.8 times the test pressure for Class 2 locations, 0.667 times the test pressure for Class 3 locations, and 0.555 times the test pressure for Class 4 locations.

(ii) The corresponding hoop stress may not exceed 72 percent of the SMYS of the pipe in Class 2 locations, 60 percent of SMYS in Class 3 locations, or 50 percent of SMYS in Class 4 locations.

(iii) For pipeline operating at an alternative maximum allowable operating pressure per § 192.620, the alternative maximum allowable operating pressure after the requalification test is 0.8 times the test pressure for Class 2 locations and 0.667 times the test pressure for Class 3 locations. The corresponding hoop stress may not exceed 80 percent of the SMYS of the pipe in Class 2 locations and 67 percent of SMYS in Class 3 locations.

(b) The maximum allowable operating pressure confirmed or revised in accordance with this section, may not exceed the maximum allowable operating pressure established before the confirmation or revision.

(c) Confirmation or revision of the maximum allowable operating pressure of a segment of pipeline in accordance

with this section does not preclude the application of §§ 192.553 and 192.555.

(d) Confirmation or revision of the maximum allowable operating pressure that is required as a result of a study under § 192.609 must be completed within 24 months of the change in class location. Pressure reduction under paragraph (a) (1) or (2) of this section within the 24-month period does not preclude establishing a maximum allowable operating pressure under paragraph (a)(3) of this section at a later date.

[Amdt. 192–63A, 54 FR 24174, June 6, 1989 as amended by Amdt. 192–78, 61 FR 28785, June 6, 1996; Amdt. 192–94, 69 FR 32895, June 14, 2004; 73 FR 62177, Oct. 17, 2008]

§ 192.612 Underwater inspection and reburial of pipelines in the Gulf of Mexico and its inlets.

(a) Each operator shall prepare and follow a procedure to identify its pipelines in the Gulf of Mexico and its inlets in waters less than 15 feet (4.6 meters) deep as measured from mean low water that are at risk of being an exposed underwater pipeline or a hazard to navigation. The procedures must be in effect August 10, 2005.

(b) Each operator shall conduct appropriate periodic underwater inspections of its pipelines in the Gulf of Mexico and its inlets in waters less than 15 feet (4.6 meters) deep as measured from mean low water based on the identified risk.

(c) If an operator discovers that its pipeline is an exposed underwater pipeline or poses a hazard to navigation, the operator shall—

(1) Promptly, but not later than 24 hours after discovery, notify the National Response Center, telephone: 1–800–424–8802, of the location and, if available, the geographic coordinates of that pipeline.

(2) Promptly, but not later than 7 days after discovery, mark the location of the pipeline in accordance with 33 CFR part 64 at the ends of the pipeline segment and at intervals of not over 500 yards (457 meters) long, except that a pipeline segment less than 200 yards (183 meters) long need only be marked at the center; and

(3) Within 6 months after discovery, or not later than November 1 of the following year if the 6 month period is later than November 1 of the year of discovery, bury the pipeline so that the top of the pipe is 36 inches (914 millimeters) below the underwater natural bottom (as determined by recognized and generally accepted practices) for normal excavation or 18 inches (457 millimeters) for rock excavation.

(i) An operator may employ engineered alternatives to burial that meet or exceed the level of protection provided by burial.

(ii) If an operator cannot obtain required state or Federal permits in time to comply with this section, it must notify OPS; specify whether the required permit is State or Federal; and, justify the delay.

[Amdt. 192–98, 69 FR 48406, Aug. 10, 2004]

§ 192.613 Continuing surveillance.

(a) Each operator shall have a procedure for continuing surveillance of its facilities to determine and take appropriate action concerning changes in class location, failures, leakage history, corrosion, substantial changes in cathodic protection requirements, and other unusual operating and maintenance conditions.

(b) If a segment of pipeline is determined to be in unsatisfactory condition but no immediate hazard exists, the operator shall initiate a program to recondition or phase out the segment involved, or, if the segment cannot be reconditioned or phased out, reduce the maximum allowable operating pressure in accordance with § 192.619 (a) and (b).

§ 192.614 Damage prevention program.

(a) Except as provided in paragraphs (d) and (e) of this section, each operator of a buried pipeline must carry out, in accordance with this section, a written program to prevent damage to that pipeline from excavation activities. For the purposes of this section, the term ''excavation activities'' includes excavation, blasting, boring, tunneling, backfilling, the removal of aboveground structures by either explosive or mechanical means, and other earthmoving operations.

(b) An operator may comply with any of the requirements of paragraph (c) of this section through participation in a public service program, such as a one-

call system, but such participation does not relieve the operator of responsibility for compliance with this section. However, an operator must perform the duties of paragraph (c)(3) of this section through participation in a one-call system, if that one-call system is a qualified one-call system. In areas that are covered by more than one qualified one-call system, an operator need only join one of the qualified one-call systems if there is a central telephone number for excavators to call for excavation activities, or if the one-call systems in those areas communicate with one another. An operator's pipeline system must be covered by a qualified one-call system where there is one in place. For the purpose of this section, a one-call system is considered a ''qualified one-call system'' if it meets the requirements of section (b)(1) or (b)(2) of this section.

(1) The state has adopted a one-call damage prevention program under § 198.37 of this chapter; or

(2) The one-call system:

(i) Is operated in accordance with § 198.39 of this chapter;

(ii) Provides a pipeline operator an opportunity similar to a voluntary participant to have a part in management responsibilities; and

(iii) Assesses a participating pipeline operator a fee that is proportionate to the costs of the one-call system's coverage of the operator's pipeline.

(c) The damage prevention program required by paragraph (a) of this section must, at a minimum:

(1) Include the identity, on a current basis, of persons who normally engage in excavation activities in the area in which the pipeline is located.

(2) Provides for notification of the public in the vicinity of the pipeline and actual notification of the persons identified in paragraph (c)(1) of this section of the following as often as needed to make them aware of the damage prevention program:

(i) The program's existence and purpose; and

(ii) How to learn the location of underground pipelines before excavation activities are begun.

(3) Provide a means of receiving and recording notification of planned excavation activities.

(4) If the operator has buried pipelines in the area of excavation activity, provide for actual notification of persons who give notice of their intent to excavate of the type of temporary marking to be provided and how to identify the markings.

(5) Provide for temporary marking of buried pipelines in the area of excavation activity before, as far as practical, the activity begins.

(6) Provide as follows for inspection of pipelines that an operator has reason to believe could be damaged by excavation activities:

(i) The inspection must be done as frequently as necessary during and after the activities to verify the integrity of the pipeline; and

(ii) In the case of blasting, any inspection must include leakage surveys.

(d) A damage prevention program under this section is not required for the following pipelines:

(1) Pipelines located offshore.

(2) Pipelines, other than those located offshore, in Class 1 or 2 locations until September 20, 1995.

(3) Pipelines to which access is physically controlled by the operator.

(e) Pipelines operated by persons other than municipalities (including operators of master meters) whose primary activity does not include the transportation of gas need not comply with the following:

(1) The requirement of paragraph (a) of this section that the damage prevention program be written; and

(2) The requirements of paragraphs (c)(1) and (c)(2) of this section.

[Amdt. 192–40, 47 FR 13824, Apr. 1, 1982, as amended by Amdt. 192–57, 52 FR 32800, Aug. 31, 1987; Amdt. 192–73, 60 FR 14650, Mar. 20, 1995; Amdt. 192–78, 61 FR 28785, June 6, 1996; Amdt.192–82, 62 FR 61699, Nov. 19, 1997; Amdt. 192–84, 63 FR 38758, July 20, 1998]

§ 192.615 Emergency plans.

(a) Each operator shall establish written procedures to minimize the hazard resulting from a gas pipeline emergency. At a minimum, the procedures must provide for the following:

(1) Receiving, identifying, and classifying notices of events which require immediate response by the operator.

(2) Establishing and maintaining adequate means of communication with appropriate fire, police, and other public officials.

(3) Prompt and effective response to a notice of each type of emergency, including the following:

(i) Gas detected inside or near a building.

(ii) Fire located near or directly involving a pipeline facility.

(iii) Explosion occurring near or directly involving a pipeline facility.

(iv) Natural disaster.

(4) The availability of personnel, equipment, tools, and materials, as needed at the scene of an emergency.

(5) Actions directed toward protecting people first and then property.

(6) Emergency shutdown and pressure reduction in any section of the operator's pipeline system necessary to minimize hazards to life or property.

(7) Making safe any actual or potential hazard to life or property.

(8) Notifying appropriate fire, police, and other public officials of gas pipeline emergencies and coordinating with them both planned responses and actual responses during an emergency.

(9) Safely restoring any service outage.

(10) Beginning action under § 192.617, if applicable, as soon after the end of the emergency as possible.

(11) Actions required to be taken by a controller during an emergency in accordance with § 192.631.

(b) Each operator shall:

(1) Furnish its supervisors who are responsible for emergency action a copy of that portion of the latest edition of the emergency procedures established under paragraph (a) of this section as necessary for compliance with those procedures.

(2) Train the appropriate operating personnel to assure that they are knowledgeable of the emergency procedures and verify that the training is effective.

(3) Review employee activities to determine whether the procedures were effectively followed in each emergency.

(c) Each operator shall establish and maintain liaison with appropriate fire, police, and other public officials to:

(1) Learn the responsibility and resources of each government organization that may respond to a gas pipeline emergency;

(2) Acquaint the officials with the operator's ability in responding to a gas pipeline emergency;

(3) Identify the types of gas pipeline emergencies of which the operator notifies the officials; and

(4) Plan how the operator and officials can engage in mutual assistance to minimize hazards to life or property.

[Amdt. 192–24, 41 FR 13587, Mar. 31, 1976, as amended by Amdt. 192–71, 59 FR 6585, Feb. 11, 1994; Amdt. 192–112, 74 FR 63327, Dec. 3, 2009]

§ 192.616 Public awareness.

(a) Except for an operator of a master meter or petroleum gas system covered under paragraph (j) of this section, each pipeline operator must develop and implement a written continuing public education program that follows the guidance provided in the American Petroleum Institute's (API) Recommended Practice (RP) 1162 (incorporated by reference, *see* § 192.7).

(b) The operator's program must follow the general program recommendations of API RP 1162 and assess the unique attributes and characteristics of the operator's pipeline and facilities.

(c) The operator must follow the general program recommendations, including baseline and supplemental requirements of API RP 1162, unless the operator provides justification in its program or procedural manual as to why compliance with all or certain provisions of the recommended practice is not practicable and not necessary for safety.

(d) The operator's program must specifically include provisions to educate the public, appropriate government organizations, and persons engaged in excavation related activities on:

(1) Use of a one-call notification system prior to excavation and other damage prevention activities;

(2) Possible hazards associated with unintended releases from a gas pipeline facility;

(3) Physical indications that such a release may have occurred;

(4) Steps that should be taken for public safety in the event of a gas pipeline release; and

(5) Procedures for reporting such an event.

(e) The program must include activities to advise affected municipalities, school districts, businesses, and residents of pipeline facility locations.

(f) The program and the media used must be as comprehensive as necessary to reach all areas in which the operator transports gas.

(g) The program must be conducted in English and in other languages commonly understood by a significant number and concentration of the non-English speaking population in the operator's area.

(h) Operators in existence on June 20, 2005, must have completed their written programs no later than June 20, 2006. The operator of a master meter or petroleum gas system covered under paragraph (j) of this section must complete development of its written procedure by June 13, 2008. Upon request, operators must submit their completed programs to PHMSA or, in the case of an intrastate pipeline facility operator, the appropriate State agency.

(i) The operator's program documentation and evaluation results must be available for periodic review by appropriate regulatory agencies.

(j) Unless the operator transports gas as a primary activity, the operator of a master meter or petroleum gas system is not required to develop a public awareness program as prescribed in paragraphs (a) through (g) of this section. Instead the operator must develop and implement a written procedure to provide its customers public awareness messages twice annually. If the master meter or petroleum gas system is located on property the operator does not control, the operator must provide similar messages twice annually to persons controlling the property. The public awareness message must include:

(1) A description of the purpose and reliability of the pipeline;

(2) An overview of the hazards of the pipeline and prevention measures used;

(3) Information about damage prevention;

(4) How to recognize and respond to a leak; and

(5) How to get additional information.

[Amdt. 192–100, 70 FR 28842, May 19, 2005; 70 FR 35041, June 16, 2005; 72 FR 70810, Dec. 13, 2007]

§ 192.617 Investigation of failures.

Each operator shall establish procedures for analyzing accidents and failures, including the selection of samples of the failed facility or equipment for laboratory examination, where appropriate, for the purpose of determining the causes of the failure and minimizing the possibility of a recurrence.

§ 192.619 Maximum allowable operating pressure: Steel or plastic pipelines.

(a) No person may operate a segment of steel or plastic pipeline at a pressure that exceeds a maximum allowable operating pressure determined under paragraph (c) or (d) of this section, or the lowest of the following:

(1) The design pressure of the weakest element in the segment, determined in accordance with subparts C and D of this part. However, for steel pipe in pipelines being converted under § 192.14 or uprated under subpart K of this part, if any variable necessary to determine the design pressure under the design formula (§ 192.105) is unknown, one of the following pressures is to be used as design pressure:

(i) Eighty percent of the first test pressure that produces yield under section N5 of Appendix N of ASME B31.8 (incorporated by reference, *see* § 192.7), reduced by the appropriate factor in paragraph (a)(2)(ii) of this section; or

(ii) If the pipe is 12¾ inches (324 mm) or less in outside diameter and is not tested to yield under this paragraph, 200 p.s.i. (1379 kPa).

(2) The pressure obtained by dividing the pressure to which the segment was tested after construction as follows:

(i) For plastic pipe in all locations, the test pressure is divided by a factor of 1.5.

(ii) For steel pipe operated at 100 p.s.i. (689 kPa) gage or more, the test pressure is divided by a factor determined in accordance with the following table:

Class location	Factors [1], segment—		
	Installed before (Nov. 12, 1970)	Installed after (Nov. 11, 1970)	Converted under § 192.14
1	1.1	1.1	1.25
2	1.25	1.25	1.25
3	1.4	1.5	1.5
4	1.4	1.5	1.5

[1] For offshore segments installed, uprated or converted after July 31, 1977, that are not located on an offshore platform, the factor is 1.25. For segments installed, uprated or converted after July 31, 1977, that are located on an offshore platform or on a platform in inland navigable waters, including a pipe riser, the factor is 1.5.

(3) The highest actual operating pressure to which the segment was subjected during the 5 years preceding the applicable date in the second column. This pressure restriction applies unless the segment was tested according to the requirements in paragraph (a)(2) of this section after the applicable date in the third column or the segment was uprated according to the requirements in subpart K of this part:

Pipeline segment	Pressure date	Test date
—Onshore gathering line that first became subject to this part (other than § 192.612) after April 13, 2006. —Onshore transmission line that was a gathering line not subject to this part before March 15, 2006.	March 15, 2006, or date line becomes subject to this part, whichever is later.	5 years preceding applicable date in second column.
Offshore gathering lines	July 1, 1976	July 1, 1971.
All other pipelines	July 1, 1970	July 1, 1965.

(4) The pressure determined by the operator to be the maximum safe pressure after considering the history of the segment, particularly known corrosion and the actual operating pressure.

(b) No person may operate a segment to which paragraph (a)(4) of this section is applicable, unless over-pressure protective devices are installed on the segment in a manner that will prevent the maximum allowable operating pressure from being exceeded, in accordance with § 192.195.

(c) The requirements on pressure restrictions in this section do not apply in the following instance. An operator may operate a segment of pipeline found to be in satisfactory condition, considering its operating and maintenance history, at the highest actual operating pressure to which the segment was subjected during the 5 years preceding the applicable date in the second column of the table in paragraph (a)(3) of this section. An operator must still comply with § 192.611.

(d) The operator of a pipeline segment of steel pipeline meeting the conditions prescribed in § 192.620(b) may elect to operate the segment at a maximum allowable operating pressure determined under § 192.620(a).

[35 FR 13257, Aug. 19, 1970]

EDITORIAL NOTE: For FEDERAL REGISTER citations affecting § 192.619, see the List of CFR Sections Affected, which appears in the Finding Aids section of the printed volume and at *www.fdsys.gov*.

§ 192.620 Alternative maximum allowable operating pressure for certain steel pipelines.

(a) *How does an operator calculate the alternative maximum allowable operating pressure?* An operator calculates the alternative maximum allowable operating pressure by using different factors in the same formulas used for calculating maximum allowable operating pressure under § 192.619(a) as follows:

(1) In determining the alternative design pressure under § 192.105, use a design factor determined in accordance with § 192.111(b), (c), or (d) or, if none of these paragraphs apply, in accordance with the following table:

Class location	Alternative design factor (F)
1	0.80
2	0.67
3	0.56

(i) For facilities installed prior to December 22, 2008, for which § 192.111(b), (c), or (d) applies, use the following design factors as alternatives for the factors specified in those paragraphs: § 192.111(b) – 0.67 or less; 192.111(c) and (d) – 0.56 or less.

(ii) [Reserved]

(2) The alternative maximum allowable operating pressure is the lower of the following:

(i) The design pressure of the weakest element in the pipeline segment, determined under subparts C and D of this part.

(ii) The pressure obtained by dividing the pressure to which the pipeline segment was tested after construction by a factor determined in the following table:

Class location	Alternative test factor
1	1.25
2	[1] 1.50
3	1.50

[1] For Class 2 alternative maximum allowable operating pressure segments installed prior to December 22, 2008 the alternative test factor is 1.25.

(b) *When may an operator use the alternative maximum allowable operating pressure calculated under paragraph (a) of this section?* An operator may use an alternative maximum allowable operating pressure calculated under paragraph (a) of this section if the following conditions are met:

(1) The pipeline segment is in a Class 1, 2, or 3 location;

(2) The pipeline segment is constructed of steel pipe meeting the additional design requirements in § 192.112;

(3) A supervisory control and data acquisition system provides remote monitoring and control of the pipeline segment. The control provided must include monitoring of pressures and flows, monitoring compressor start-ups and shut-downs, and remote closure of valves per paragraph (d)(3) of this section;

(4) The pipeline segment meets the additional construction requirements described in § 192.328;

(5) The pipeline segment does not contain any mechanical couplings used in place of girth welds;

(6) If a pipeline segment has been previously operated, the segment has not experienced any failure during normal operations indicative of a systemic fault in material as determined by a root cause analysis, including metallurgical examination of the failed pipe. The results of this root cause analysis must be reported to each PHMSA pipeline safety regional office where the pipeline is in service at least 60 days prior to operation at the alternative MAOP. An operator must also notify a State pipeline safety authority when the pipeline is located in a State where PHMSA has an interstate agent agreement, or an intrastate pipeline is regulated by that State; and

(7) At least 95 percent of girth welds on a segment that was constructed prior to December 22, 2008, must have been non-destructively examined in accordance with § 192.243(b) and (c).

(c) *What is an operator electing to use the alternative maximum allowable operating pressure required to do?* If an operator elects to use the alternative maximum allowable operating pressure calculated under paragraph (a) of this section for a pipeline segment, the operator must do each of the following:

(1) Notify each PHMSA pipeline safety regional office where the pipeline is in service of its election with respect to a segment at least 180 days before operating at the alternative maximum allowable operating pressure. An operator must also notify a State pipeline safety authority when the pipeline is located in a State where PHMSA has an interstate agent agreement, or an intrastate pipeline is regulated by that State.

(2) Certify, by signature of a senior executive officer of the company, as follows:

(i) The pipeline segment meets the conditions described in paragraph (b) of this section; and

(ii) The operating and maintenance procedures include the additional operating and maintenance requirements of paragraph (d) of this section; and

(iii) The review and any needed program upgrade of the damage prevention program required by paragraph (d)(4)(v) of this section has been completed.

(3) Send a copy of the certification required by paragraph (c)(2) of this section to each PHMSA pipeline safety regional office where the pipeline is in service 30 days prior to operating at the alternative MAOP. An operator must also send a copy to a State pipeline safety authority when the pipeline is located in a State where PHMSA has an interstate agent agreement, or an intrastate pipeline is regulated by that State.

(4) For each pipeline segment, do one of the following:

(i) Perform a strength test as described in § 192.505 at a test pressure calculated under paragraph (a) of this section or

(ii) For a pipeline segment in existence prior to December 22, 2008, certify, under paragraph (c)(2) of this section, that the strength test performed under § 192.505 was conducted at test pressure calculated under paragraph (a) of this section, or conduct a new strength test in accordance with paragraph (c)(4)(i) of this section.

(5) Comply with the additional operation and maintenance requirements described in paragraph (d) of this section.

(6) If the performance of a construction task associated with implementing alternative MAOP that occurs after December 22, 2008, can affect the integrity of the pipeline segment, treat that task as a ''covered task'', notwithstanding the definition in § 192.801(b) and implement the requirements of subpart N as appropriate.

(7) Maintain, for the useful life of the pipeline, records demonstrating compliance with paragraphs (b), (c)(6), and (d) of this section.

(8) A Class 1 and Class 2 pipeline location can be upgraded one class due to class changes per § 192.611(a)(3)(i). All class location changes from Class 1 to Class 2 and from Class 2 to Class 3 must have all anomalies evaluated and remediated per: The ''original pipeline class grade'' § 192.620(d)(11) anomaly repair requirements; and all anomalies with a wall loss equal to or greater than 40 percent must be excavated and remediated. Pipelines in Class 4 may not operate at an alternative MAOP.

(d) *What additional operation and maintenance requirements apply to operation at the alternative maximum allowable operating pressure?* In addition to compliance with other applicable safety standards in this part, if an operator establishes a maximum allowable operating pressure for a pipeline segment under paragraph (a) of this section, an operator must comply with the additional operation and maintenance requirements as follows:

To address increased risk of a maximum allowable operating pressure based on higher stress levels in the following areas:	Take the following additional step:
(1) Identifying and evaluating threats.	Develop a threat matrix consistent with § 192.917 to do the following: (i) Identify and compare the increased risk of operating the pipeline at the increased stress level under this section with conventional operation; and (ii) Describe and implement procedures used to mitigate the risk.
(2) Notifying the public	(i) Recalculate the potential impact circle as defined in § 192.903 to reflect use of the alternative maximum operating pressure calculated under paragraph (a) of this section and pipeline operating conditions; and (ii) In implementing the public education program required under § 192.616, perform the following: (A) Include persons occupying property within 220 yards of the centerline and within the potential impact circle within the targeted audience; and (B) Include information about the integrity management activities performed under this section within the message provided to the audience.
(3) Responding to an emergency in an area defined as a high consequence area in § 192.903.	(i) Ensure that the identification of high consequence areas reflects the larger potential impact circle recalculated under paragraph (d)(2)(i) of this section. (ii) If personnel response time to mainline valves on either side of the high consequence area exceeds one hour (under normal driving conditions and speed limits) from the time the event is identified in the control room, provide remote valve control through a supervisory control and data acquisition (SCADA) system, other leak detection system, or an alternative method of control. (iii) Remote valve control must include the ability to close and monitor the valve position (open or closed), and monitor pressure upstream and downstream. (iv) A line break valve control system using differential pressure, rate of pressure drop or other widely-accepted method is an acceptable alternative to remote valve control.
(4) Protecting the right-of-way ..	(i) Patrol the right-of-way at intervals not exceeding 45 days, but at least 12 times each calendar year, to inspect for excavation activities, ground movement, wash outs, leakage, or other activities or conditions affecting the safety operation of the pipeline. (ii) Develop and implement a plan to monitor for and mitigate occurrences of unstable soil and ground movement.

To address increased risk of a maximum allowable operating pressure based on higher stress levels in the following areas:	Take the following additional step:
	(iii) If observed conditions indicate the possible loss of cover, perform a depth of cover study and replace cover as necessary to restore the depth of cover or apply alternative means to provide protection equivalent to the originally-required depth of cover. (iv) Use line-of-sight line markers satisfying the requirements of § 192.707(d) except in agricultural areas, large water crossings or swamp, steep terrain, or where prohibited by Federal Energy Regulatory Commission orders, permits, or local law. (v) Review the damage prevention program under § 192.614(a) in light of national consensus practices, to ensure the program provides adequate protection of the right-of-way. Identify the standards or practices considered in the review, and meet or exceed those standards or practices by incorporating appropriate changes into the program. (vi) Develop and implement a right-of-way management plan to protect the pipeline segment from damage due to excavation activities.
(5) Controlling internal corrosion.	(i) Develop and implement a program to monitor for and mitigate the presence of, deleterious gas stream constituents. (ii) At points where gas with potentially deleterious contaminants enters the pipeline, use filter separators or separators and gas quality monitoring equipment. (iii) Use gas quality monitoring equipment that includes a moisture analyzer, chromatograph, and periodic hydrogen sulfide sampling. (iv) Use cleaning pigs and sample accumulated liquids. Use inhibitors when corrosive gas or liquids are present. (v) Address deleterious gas stream constituents as follows: (A) Limit carbon dioxide to 3 percent by volume; (B) Allow no free water and otherwise limit water to seven pounds per million cubic feet of gas; and (C) Limit hydrogen sulfide to 1.0 grain per hundred cubic feet (16 ppm) of gas, where the hydrogen sulfide is greater than 0.5 grain per hundred cubic feet (8 ppm) of gas, implement a pigging and inhibitor injection program to address deleterious gas stream constituents, including follow-up sampling and quality testing of liquids at receipt points. (vi) Review the program at least quarterly based on the gas stream experience and implement adjustments to monitor for, and mitigate the presence of, deleterious gas stream constituents.
(6) Controlling interference that can impact external corrosion.	(i) Prior to operating an existing pipeline segment at an alternate maximum allowable operating pressure calculated under this section, or within six months after placing a new pipeline segment in service at an alternate maximum allowable operating pressure calculated under this section, address any interference currents on the pipeline segment. (ii) To address interference currents, perform the following: (A) Conduct an interference survey to detect the presence and level of any electrical current that could impact external corrosion where interference is suspected; (B) Analyze the results of the survey; and (C) Take any remedial action needed within 6 months after completing the survey to protect the pipeline segment from deleterious current.
(7) Confirming external corrosion control through indirect assessment.	(i) Within six months after placing the cathodic protection of a new pipeline segment in operation, or within six months after certifying a segment under § 192.620(c)(1) of an existing pipeline segment under this section, assess the adequacy of the cathodic protection through an indirect method such as close-interval survey, and the integrity of the coating using direct current voltage gradient (DCVG) or alternating current voltage gradient (ACVG). (ii) Remediate any construction damaged coating with a voltage drop classified as moderate or severe (IR drop greater than 35% for DCVG or 50 dBμv for ACVG) under section 4 of NACE RP–0502–2002 (incorporated by reference, see § 192.7). (iii) Within six months after completing the baseline internal inspection required under paragraph (d)(9) of this section, integrate the results of the indirect assessment required under paragraph (d)(7)(i) of this section with the results of the baseline internal inspection and take any needed remedial actions. (iv) For all pipeline segments in high consequence areas, perform periodic assessments as follows: (A) Conduct periodic close interval surveys with current interrupted to confirm voltage drops in association with periodic assessments under subpart O of this part. (B) Locate pipe-to-soil test stations at half-mile intervals within each high consequence area ensuring at least one station is within each high consequence area, if practicable. (C) Integrate the results with those of the baseline and periodic assessments for integrity done under paragraphs (d)(9) and (d)(10) of this section.
(8) Controlling external corrosion through cathodic protection.	(i) If an annual test station reading indicates cathodic protection below the level of protection required in subpart I of this part, complete remedial action within six months of the failed reading or notify each PHMSA pipeline safety regional office where the pipeline is in service demonstrating that the integrity of the pipeline is not compromised if the repair takes longer than 6 months. An operator must also notify a State pipeline safety authority when the pipeline is located in a State where PHMSA has an interstate agent agreement, or an intrastate pipeline is regulated by that State; and

To address increased risk of a maximum allowable operating pressure based on higher stress levels in the following areas:	Take the following additional step:
	(ii) After remedial action to address a failed reading, confirm restoration of adequate corrosion control by a close interval survey on either side of the affected test station to the next test station unless the reason for the failed reading is determined to be a rectifier connection or power input problem that can be remediated and otherwise verified. (iii) If the pipeline segment has been in operation, the cathodic protection system on the pipeline segment must have been operational within 12 months of the completion of construction.
(9) Conducting a baseline assessment of integrity.	(i) Except as provided in paragraph (d)(9)(iii) of this section, for a new pipeline segment operating at the new alternative maximum allowable operating pressure, perform a baseline internal inspection of the entire pipeline segment as follows: (A) Assess using a geometry tool after the initial hydrostatic test and backfill and within six months after placing the new pipeline segment in service; and (B) Assess using a high resolution magnetic flux tool within three years after placing the new pipeline segment in service at the alternative maximum allowable operating pressure. (ii) Except as provided in paragraph (d)(9)(iii) of this section, for an existing pipeline segment, perform a baseline internal assessment using a geometry tool and a high resolution magnetic flux tool before, but within two years prior to, raising pressure to the alternative maximum allowable operating pressure as allowed under this section. (iii) If headers, mainline valve by-passes, compressor station piping, meter station piping, or other short portion of a pipeline segment operating at alternative maximum allowable operating pressure cannot accommodate a geometry tool and a high resolution magnetic flux tool, use direct assessment (per § 192.925, § 192.927 and/or § 192.929) or pressure testing (per subpart J of this part) to assess that portion.
(10) Conducting periodic assessments of integrity.	(i) Determine a frequency for subsequent periodic integrity assessments as if all the alternative maximum allowable operating pressure pipeline segments were covered by subpart O of this part and (ii) Conduct periodic internal inspections using a high resolution magnetic flux tool on the frequency determined under paragraph (d)(10)(i) of this section, or (iii) Use direct assessment (per § 192.925, § 192.927 and/or § 192.929) or pressure testing (per subpart J of this part) for periodic assessment of a portion of a segment to the extent permitted for a baseline assessment under paragraph (d)(9)(iii) of this section.
(11) Making repairs	(i) Perform the following when evaluating an anomaly: (A) Use the most conservative calculation for determining remaining strength or an alternative validated calculation based on pipe diameter, wall thickness, grade, operating pressure, operating stress level, and operating temperature: and (B) Take into account the tolerances of the tools used for the inspection. (ii) Repair a defect immediately if any of the following apply: (A) The defect is a dent discovered during the baseline assessment for integrity under paragraph (d)(9) of this section and the defect meets the criteria for immediate repair in § 192.309(b). (B) The defect meets the criteria for immediate repair in § 192.933(d). (C) The alternative maximum allowable operating pressure was based on a design factor of 0.67 under paragraph (a) of this section and the failure pressure is less than 1.25 times the alternative maximum allowable operating pressure. (D) The alternative maximum allowable operating pressure was based on a design factor of 0.56 under paragraph (a) of this section and the failure pressure is less than or equal to 1.4 times the alternative maximum allowable operating pressure. (iii) If paragraph (d)(11)(ii) of this section does not require immediate repair, repair a defect within one year if any of the following apply: (A) The defect meets the criteria for repair within one year in § 192.933(d). (B) The alternative maximum allowable operating pressure was based on a design factor of 0.80 under paragraph (a) of this section and the failure pressure is less than 1.25 times the alternative maximum allowable operating pressure. (C) The alternative maximum allowable operating pressure was based on a design factor of 0.67 under paragraph (a) of this section and the failure pressure is less than 1.50 times the alternative maximum allowable operating pressure. (D) The alternative maximum allowable operating pressure was based on a design factor of 0.56 under paragraph (a) of this section and the failure pressure is less than or equal to 1.80 times the alternative maximum allowable operating pressure. (iv) Evaluate any defect not required to be repaired under paragraph (d)(11)(ii) or (iii) of this section to determine its growth rate, set the maximum interval for repair or re-inspection, and repair or re-inspect within that interval.

(e) *Is there any change in overpressure protection associated with operating at the alternative maximum allowable operating pressure?* Notwithstanding the required capacity of pressure relieving and limiting stations otherwise required by § 192.201, if an operator establishes a maximum allowable operating

pressure for a pipeline segment in accordance with paragraph (a) of this section, an operator must:

(1) Provide overpressure protection that limits mainline pressure to a maximum of 104 percent of the maximum allowable operating pressure; and

(2) Develop and follow a procedure for establishing and maintaining accurate set points for the supervisory control and data acquisition system.

[73 FR 62177, Oct. 17, 2008, as amended by Amdt. 192–111, 74 FR 62505, Nov. 30, 2009]

§ 192.621 Maximum allowable operating pressure: High-pressure distribution systems.

(a) No person may operate a segment of a high pressure distribution system at a pressure that exceeds the lowest of the following pressures, as applicable:

(1) The design pressure of the weakest element in the segment, determined in accordance with subparts C and D of this part.

(2) 60 p.s.i. (414 kPa) gage, for a segment of a distribution system otherwise designed to operate at over 60 p.s.i. (414 kPa) gage, unless the service lines in the segment are equipped with service regulators or other pressure limiting devices in series that meet the requirements of § 192.197(c).

(3) 25 p.s.i. (172 kPa) gage in segments of cast iron pipe in which there are unreinforced bell and spigot joints.

(4) The pressure limits to which a joint could be subjected without the possibility of its parting.

(5) The pressure determined by the operator to be the maximum safe pressure after considering the history of the segment, particularly known corrosion and the actual operating pressures.

(b) No person may operate a segment of pipeline to which paragraph (a)(5) of this section applies, unless overpressure protective devices are installed on the segment in a manner that will prevent the maximum allowable operating pressure from being exceeded, in accordance with § 192.195.

[35 FR 13257, Aug. 19, 1970, as amended by Amdt. 192–85, 63 FR 37504, July 13, 1998]

§ 192.623 Maximum and minimum allowable operating pressure; Low-pressure distribution systems.

(a) No person may operate a low-pressure distribution system at a pressure high enough to make unsafe the operation of any connected and properly adjusted low-pressure gas burning equipment.

(b) No person may operate a low pressure distribution system at a pressure lower than the minimum pressure at which the safe and continuing operation of any connected and properly adjusted low-pressure gas burning equipment can be assured.

§ 192.625 Odorization of gas.

(a) A combustible gas in a distribution line must contain a natural odorant or be odorized so that at a concentration in air of one-fifth of the lower explosive limit, the gas is readily detectable by a person with a normal sense of smell.

(b) After December 31, 1976, a combustible gas in a transmission line in a Class 3 or Class 4 location must comply with the requirements of paragraph (a) of this section unless:

(1) At least 50 percent of the length of the line downstream from that location is in a Class 1 or Class 2 location;

(2) The line transports gas to any of the following facilities which received gas without an odorant from that line before May 5, 1975;

(i) An underground storage field;

(ii) A gas processing plant;

(iii) A gas dehydration plant; or

(iv) An industrial plant using gas in a process where the presence of an odorant:

(A) Makes the end product unfit for the purpose for which it is intended;

(B) Reduces the activity of a catalyst; or

(C) Reduces the percentage completion of a chemical reaction;

(3) In the case of a lateral line which transports gas to a distribution center, at least 50 percent of the length of that line is in a Class 1 or Class 2 location; or

(4) The combustible gas is hydrogen intended for use as a feedstock in a manufacturing process.

(c) In the concentrations in which it is used, the odorant in combustible gases must comply with the following:

(1) The odorant may not be deleterious to persons, materials, or pipe.

(2) The products of combustion from the odorant may not be toxic when breathed nor may they be corrosive or harmful to those materials to which the products of combustion will be exposed.

(d) The odorant may not be soluble in water to an extent greater than 2.5 parts to 100 parts by weight.

(e) Equipment for odorization must introduce the odorant without wide variations in the level of odorant.

(f) To assure the proper concentration of odorant in accordance with this section, each operator must conduct periodic sampling of combustible gases using an instrument capable of determining the percentage of gas in air at which the odor becomes readily detectable. Operators of master meter systems may comply with this requirement by—

(1) Receiving written verification from their gas source that the gas has the proper concentration of odorant; and

(2) Conducting periodic ''sniff'' tests at the extremities of the system to confirm that the gas contains odorant.

[35 FR 13257, Aug. 19, 1970]

EDITORIAL NOTE: For FEDERAL REGISTER citations affecting § 192.625, see the List of CFR Sections Affected, which appears in the Finding Aids section of the printed volume and at *www.fdsys.gov*.

§ 192.627 Tapping pipelines under pressure.

Each tap made on a pipeline under pressure must be performed by a crew qualified to make hot taps.

§ 192.629 Purging of pipelines.

(a) When a pipeline is being purged of air by use of gas, the gas must be released into one end of the line in a moderately rapid and continuous flow. If gas cannot be supplied in sufficient quantity to prevent the formation of a hazardous mixture of gas and air, a slug of inert gas must be released into the line before the gas.

(b) When a pipeline is being purged of gas by use of air, the air must be released into one end of the line in a moderately rapid and continuous flow. If air cannot be supplied in sufficient quantity to prevent the formation of a hazardous mixture of gas and air, a slug of inert gas must be released into the line before the air.

§ 192.631 Control room management.

(a) *General.*

(1) This section applies to each operator of a pipeline facility with a controller working in a control room who monitors and controls all or part of a pipeline facility through a SCADA system. Each operator must have and follow written control room management procedures that implement the requirements of this section, except that for each control room where an operator's activities are limited to either or both of:

(i) Distribution with less than 250,000 services, or

(ii) Transmission without a compressor station, the operator must have and follow written procedures that implement only paragraphs (d) (regarding fatigue), (i) (regarding compliance validation), and (j) (regarding compliance and deviations) of this section.

(2) The procedures required by this section must be integrated, as appropriate, with operating and emergency procedures required by §§ 192.605 and 192.615. An operator must develop the procedures no later than August 1, 2011, and must implement the procedures according to the following schedule. The procedures required by paragraphs (b), (c)(5), (d)(2) and (d)(3), (f) and (g) of this section must be implemented no later than October 1, 2011. The procedures required by paragraphs (c)(1) through (4), (d)(1), (d)(4), and (e) must be implemented no later than August 1, 2012. The training procedures required by paragraph (h) must be implemented no later than August 1, 2012, except that any training required by another paragraph of this section must be implemented no later than the deadline for that paragraph.

(b) *Roles and responsibilities.* Each operator must define the roles and responsibilities of a controller during normal, abnormal, and emergency operating conditions. To provide for a

controller's prompt and appropriate response to operating conditions, an operator must define each of the following:

(1) A controller's authority and responsibility to make decisions and take actions during normal operations;

(2) A controller's role when an abnormal operating condition is detected, even if the controller is not the first to detect the condition, including the controller's responsibility to take specific actions and to communicate with others;

(3) A controller's role during an emergency, even if the controller is not the first to detect the emergency, including the controller's responsibility to take specific actions and to communicate with others; and

(4) A method of recording controller shift-changes and any hand-over of responsibility between controllers.

(c) *Provide adequate information*. Each operator must provide its controllers with the information, tools, processes and procedures necessary for the controllers to carry out the roles and responsibilities the operator has defined by performing each of the following:

(1) Implement sections 1, 4, 8, 9, 11.1, and 11.3 of API RP 1165 (incorporated by reference, see §192.7) whenever a SCADA system is added, expanded or replaced, unless the operator demonstrates that certain provisions of sections 1, 4, 8, 9, 11.1, and 11.3 of API RP 1165 are not practical for the SCADA system used;

(2) Conduct a point-to-point verification between SCADA displays and related field equipment when field equipment is added or moved and when other changes that affect pipeline safety are made to field equipment or SCADA displays;

(3) Test and verify an internal communication plan to provide adequate means for manual operation of the pipeline safely, at least once each calendar year, but at intervals not to exceed 15 months;

(4) Test any backup SCADA systems at least once each calendar year, but at intervals not to exceed 15 months; and

(5) Establish and implement procedures for when a different controller assumes responsibility, including the content of information to be exchanged.

(d) *Fatigue mitigation*. Each operator must implement the following methods to reduce the risk associated with controller fatigue that could inhibit a controller's ability to carry out the roles and responsibilities the operator has defined:

(1) Establish shift lengths and schedule rotations that provide controllers off-duty time sufficient to achieve eight hours of continuous sleep;

(2) Educate controllers and supervisors in fatigue mitigation strategies and how off-duty activities contribute to fatigue;

(3) Train controllers and supervisors to recognize the effects of fatigue; and

(4) Establish a maximum limit on controller hours-of-service, which may provide for an emergency deviation from the maximum limit if necessary for the safe operation of a pipeline facility.

(e) *Alarm management*. Each operator using a SCADA system must have a written alarm management plan to provide for effective controller response to alarms. An operator's plan must include provisions to:

(1) Review SCADA safety-related alarm operations using a process that ensures alarms are accurate and support safe pipeline operations;

(2) Identify at least once each calendar month points affecting safety that have been taken off scan in the SCADA host, have had alarms inhibited, generated false alarms, or that have had forced or manual values for periods of time exceeding that required for associated maintenance or operating activities;

(3) Verify the correct safety-related alarm set-point values and alarm descriptions at least once each calendar year, but at intervals not to exceed 15 months;

(4) Review the alarm management plan required by this paragraph at least once each calendar year, but at intervals not exceeding 15 months, to determine the effectiveness of the plan;

(5) Monitor the content and volume of general activity being directed to and required of each controller at least once each calendar year, but at intervals not to exceed 15 months, that will

assure controllers have sufficient time to analyze and react to incoming alarms; and

(6) Address deficiencies identified through the implementation of paragraphs (e)(1) through (e)(5) of this section.

(f) *Change management.* Each operator must assure that changes that could affect control room operations are coordinated with the control room personnel by performing each of the following:

(1) Establish communications between control room representatives, operator's management, and associated field personnel when planning and implementing physical changes to pipeline equipment or configuration;

(2) Require its field personnel to contact the control room when emergency conditions exist and when making field changes that affect control room operations; and

(3) Seek control room or control room management participation in planning prior to implementation of significant pipeline hydraulic or configuration changes.

(g) *Operating experience.* Each operator must assure that lessons learned from its operating experience are incorporated, as appropriate, into its control room management procedures by performing each of the following:

(1) Review incidents that must be reported pursuant to 49 CFR part 191 to determine if control room actions contributed to the event and, if so, correct, where necessary, deficiencies related to:

(i) Controller fatigue;

(ii) Field equipment;

(iii) The operation of any relief device;

(iv) Procedures;

(v) SCADA system configuration; and

(vi) SCADA system performance.

(2) Include lessons learned from the operator's experience in the training program required by this section.

(h) *Training.* Each operator must establish a controller training program and review the training program content to identify potential improvements at least once each calendar year, but at intervals not to exceed 15 months. An operator's program must provide for training each controller to carry out the roles and responsibilities defined by the operator. In addition, the training program must include the following elements:

(1) Responding to abnormal operating conditions likely to occur simultaneously or in sequence;

(2) Use of a computerized simulator or non-computerized (tabletop) method for training controllers to recognize abnormal operating conditions;

(3) Training controllers on their responsibilities for communication under the operator's emergency response procedures;

(4) Training that will provide a controller a working knowledge of the pipeline system, especially during the development of abnormal operating conditions; and

(5) For pipeline operating setups that are periodically, but infrequently used, providing an opportunity for controllers to review relevant procedures in advance of their application.

(i) *Compliance validation.* Upon request, operators must submit their procedures to PHMSA or, in the case of an intrastate pipeline facility regulated by a State, to the appropriate State agency.

(j) *Compliance and deviations.* An operator must maintain for review during inspection:

(1) Records that demonstrate compliance with the requirements of this section; and

(2) Documentation to demonstrate that any deviation from the procedures required by this section was necessary for the safe operation of a pipeline facility.

[Amdt. 192–112, 74 FR 63327, Dec. 3, 2009, as amended at 75 FR 5537, Feb. 3, 2010; 76 FR 35135, June 16, 2011]

Subpart M—Maintenance

§ 192.701 Scope.

This subpart prescribes minimum requirements for maintenance of pipeline facilities.

§ 192.703 General.

(a) No person may operate a segment of pipeline, unless it is maintained in accordance with this subpart.

(b) Each segment of pipeline that becomes unsafe must be replaced, repaired, or removed from service.

(c) Hazardous leaks must be repaired promptly.

§ 192.705 Transmission lines: Patrolling.

(a) Each operator shall have a patrol program to observe surface conditions on and adjacent to the transmission line right-of-way for indications of leaks, construction activity, and other factors affecting safety and operation.

(b) The frequency of patrols is determined by the size of the line, the operating pressures, the class location, terrain, weather, and other relevant factors, but intervals between patrols may not be longer than prescribed in the following table:

	Maximum interval between patrols	
Class location of line	At highway and railroad crossings	At all other places
1, 2	7½ months; but at least twice each calendar year.	15 months; but at least once each calendar year.
3	4½ months; but at least four times each calendar year.	7½ months; but at least twice each calendar year.
4	4½ months; but at least four times each calendar year.	4½ months; but at least four times each calendar year.

(c) Methods of patrolling include walking, driving, flying or other appropriate means of traversing the right-of-way.

[Amdt. 192–21, 40 FR 20283, May 9, 1975, as amended by Amdt. 192–43, 47 FR 46851, Oct. 21, 1982; Amdt. 192–78, 61 FR 28786, June 6, 1996]

§ 192.706 Transmission lines: Leakage surveys.

Leakage surveys of a transmission line must be conducted at intervals not exceeding 15 months, but at least once each calendar year. However, in the case of a transmission line which transports gas in conformity with § 192.625 without an odor or odorant, leakage surveys using leak detector equipment must be conducted—

(a) In Class 3 locations, at intervals not exceeding 7½ months, but at least twice each calendar year; and

(b) In Class 4 locations, at intervals not exceeding 4½ months, but at least four times each calendar year.

[Amdt. 192–21, 40 FR 20283, May 9, 1975, as amended by Amdt. 192–43, 47 FR 46851, Oct. 21, 1982; Amdt. 192–71, 59 FR 6585, Feb. 11, 1994]

§ 192.707 Line markers for mains and transmission lines.

(a) *Buried pipelines.* Except as provided in paragraph (b) of this section, a line marker must be placed and maintained as close as practical over each buried main and transmission line:

(1) At each crossing of a public road and railroad; and

(2) Wherever necessary to identify the location of the transmission line or main to reduce the possibility of damage or interference.

(b) *Exceptions for buried pipelines.* Line markers are not required for the following pipelines:

(1) Mains and transmission lines located offshore, or at crossings of or under waterways and other bodies of water.

(2) Mains in Class 3 or Class 4 locations where a damage prevention program is in effect under § 192.614.

(3) Transmission lines in Class 3 or 4 locations until March 20, 1996.

(4) Transmission lines in Class 3 or 4 locations where placement of a line marker is impractical.

(c) *Pipelines aboveground.* Line markers must be placed and maintained along each section of a main and transmission line that is located aboveground in an area accessible to the public.

(d) *Marker warning.* The following must be written legibly on a background of sharply contrasting color on each line marker:

(1) The word ''Warning,'' ''Caution,'' or ''Danger'' followed by the words ''Gas (or name of gas transported) Pipeline'' all of which, except for markers in heavily developed urban areas, must be in letters at least 1 inch (25 millimeters) high with ¼ inch (6.4 millimeters) stroke.

(2) The name of the operator and the telephone number (including area code)

where the operator can be reached at all times.

[Amdt. 192–20, 40 FR 13505, Mar. 27, 1975; Amdt. 192–27, 41 FR 39752, Sept. 16, 1976, as amended by Amdt. 192–20A, 41 FR 56808, Dec. 30, 1976; Amdt. 192–44, 48 FR 25208, June 6, 1983; Amdt. 192–73, 60 FR 14650, Mar. 20, 1995; Amdt. 192–85, 63 FR 37504, July 13, 1998]

§ 192.709 Transmission lines: Record keeping.

Each operator shall maintain the following records for transmission lines for the periods specified:

(a) The date, location, and description of each repair made to pipe (including pipe-to-pipe connections) must be retained for as long as the pipe remains in service.

(b) The date, location, and description of each repair made to parts of the pipeline system other than pipe must be retained for at least 5 years. However, repairs generated by patrols, surveys, inspections, or tests required by subparts L and M of this part must be retained in accordance with paragraph (c) of this section.

(c) A record of each patrol, survey, inspection, and test required by subparts L and M of this part must be retained for at least 5 years or until the next patrol, survey, inspection, or test is completed, whichever is longer.

[Amdt. 192–78, 61 FR 28786, June 6, 1996]

§ 192.711 Transmission lines: General requirements for repair procedures.

(a) *Temporary repairs.* Each operator must take immediate temporary measures to protect the public whenever:

(1) A leak, imperfection, or damage that impairs its serviceability is found in a segment of steel transmission line operating at or above 40 percent of the SMYS; and

(2) It is not feasible to make a permanent repair at the time of discovery.

(b) *Permanent repairs.* An operator must make permanent repairs on its pipeline system according to the following:

(1) Non integrity management repairs: The operator must make permanent repairs as soon as feasible.

(2) Integrity management repairs: When an operator discovers a condition on a pipeline covered under Subpart O–Gas Transmission Pipeline Integrity Management, the operator must remediate the condition as prescribed by § 192.933(d).

(c) *Welded patch.* Except as provided in § 192.717(b)(3), no operator may use a welded patch as a means of repair.

[Amdt. 192–114, 75 FR 48604, Aug. 11, 2010]

§ 192.713 Transmission lines: Permanent field repair of imperfections and damages.

(a) Each imperfection or damage that impairs the serviceability of pipe in a steel transmission line operating at or above 40 percent of SMYS must be—

(1) Removed by cutting out and replacing a cylindrical piece of pipe; or

(2) Repaired by a method that reliable engineering tests and analyses show can permanently restore the serviceability of the pipe.

(b) Operating pressure must be at a safe level during repair operations.

[Amdt. 192–88, 64 FR 69665, Dec. 14, 1999]

§ 192.715 Transmission lines: Permanent field repair of welds.

Each weld that is unacceptable under § 192.241(c) must be repaired as follows:

(a) If it is feasible to take the segment of transmission line out of service, the weld must be repaired in accordance with the applicable requirements of § 192.245.

(b) A weld may be repaired in accordance with § 192.245 while the segment of transmission line is in service if:

(1) The weld is not leaking;

(2) The pressure in the segment is reduced so that it does not produce a stress that is more than 20 percent of the SMYS of the pipe; and

(3) Grinding of the defective area can be limited so that at least ⅛-inch (3.2 millimeters) thickness in the pipe weld remains.

(c) A defective weld which cannot be repaired in accordance with paragraph (a) or (b) of this section must be repaired by installing a full encirclement welded split sleeve of appropriate design.

[35 FR 13257, Aug. 19, 1970, as amended by Amdt. 192–85, 63 FR 37504, July 13, 1998]

§ 192.717 Transmission lines: Permanent field repair of leaks.

Each permanent field repair of a leak on a transmission line must be made by—

(a) Removing the leak by cutting out and replacing a cylindrical piece of pipe; or

(b) Repairing the leak by one of the following methods:

(1) Install a full encirclement welded split sleeve of appropriate design, unless the transmission line is joined by mechanical couplings and operates at less than 40 percent of SMYS.

(2) If the leak is due to a corrosion pit, install a properly designed bolt-on-leak clamp.

(3) If the leak is due to a corrosion pit and on pipe of not more than 40,000 psi (267 Mpa) SMYS, fillet weld over the pitted area a steel plate patch with rounded corners, of the same or greater thickness than the pipe, and not more than one-half of the diameter of the pipe in size.

(4) If the leak is on a submerged offshore pipeline or submerged pipeline in inland navigable waters, mechanically apply a full encirclement split sleeve of appropriate design.

(5) Apply a method that reliable engineering tests and analyses show can permanently restore the serviceability of the pipe.

[Amdt. 192–88, 64 FR 69665, Dec. 14, 1999]

§ 192.719 Transmission lines: Testing of repairs.

(a) *Testing of replacement pipe.* If a segment of transmission line is repaired by cutting out the damaged portion of the pipe as a cylinder, the replacement pipe must be tested to the pressure required for a new line installed in the same location. This test may be made on the pipe before it is installed.

(b) *Testing of repairs made by welding.* Each repair made by welding in accordance with §§ 192.713, 192.715, and 192.717 must be examined in accordance with § 192.241.

[35 FR 13257, Aug. 19, 1970, as amended by Amdt. 192–54, 51 FR 41635, Nov. 18, 1986]

§ 192.721 Distribution systems: Patrolling.

(a) The frequency of patrolling mains must be determined by the severity of the conditions which could cause failure or leakage, and the consequent hazards to public safety.

(b) Mains in places or on structures where anticipated physical movement or external loading could cause failure or leakage must be patrolled—

(1) In business districts, at intervals not exceeding 4½ months, but at least four times each calendar year; and

(2) Outside business districts, at intervals not exceeding 7½ months, but at least twice each calendar year.

[35 FR 13257, Aug. 19, 1970, as amended by Amdt. 192–43, 47 FR 46851, Oct. 21, 1982; Amdt. 192–78, 61 FR 28786, June 6, 1996]

§ 192.723 Distribution systems: Leakage surveys.

(a) Each operator of a distribution system shall conduct periodic leakage surveys in accordance with this section.

(b) The type and scope of the leakage control program must be determined by the nature of the operations and the local conditions, but it must meet the following minimum requirements:

(1) A leakage survey with leak detector equipment must be conducted in business districts, including tests of the atmosphere in gas, electric, telephone, sewer, and water system manholes, at cracks in pavement and sidewalks, and at other locations providing an opportunity for finding gas leaks, at intervals not exceeding 15 months, but at least once each calendar year.

(2) A leakage survey with leak detector equipment must be conducted outside business districts as frequently as necessary, but at least once every 5 calendar years at intervals not exceeding 63 months. However, for cathodically unprotected distribution lines subject to § 192.465(e) on which electrical surveys for corrosion are impractical, a leakage survey must be conducted at least once every 3 calendar

years at intervals not exceeding 39 months.

[35 FR 13257, Aug. 19, 1970, as amended by Amdt. 192–43, 47 FR 46851, Oct. 21, 1982; Amdt. 192–70, 58 FR 54528, 54529, Oct. 22, 1993; Amdt. 192–71, 59 FR 6585, Feb. 11, 1994; Amdt. 192–94, 69 FR 32895, June 14, 2004; Amdt. 192–94, 69 FR 54592, Sept. 9, 2004]

§ 192.725 Test requirements for reinstating service lines.

(a) Except as provided in paragraph (b) of this section, each disconnected service line must be tested in the same manner as a new service line, before being reinstated.

(b) Each service line temporarily disconnected from the main must be tested from the point of disconnection to the service line valve in the same manner as a new service line, before reconnecting. However, if provisions are made to maintain continuous service, such as by installation of a bypass, any part of the original service line used to maintain continuous service need not be tested.

§ 192.727 Abandonment or deactivation of facilities.

(a) Each operator shall conduct abandonment or deactivation of pipelines in accordance with the requirements of this section.

(b) Each pipeline abandoned in place must be disconnected from all sources and supplies of gas; purged of gas; in the case of offshore pipelines, filled with water or inert materials; and sealed at the ends. However, the pipeline need not be purged when the volume of gas is so small that there is no potential hazard.

(c) Except for service lines, each inactive pipeline that is not being maintained under this part must be disconnected from all sources and supplies of gas; purged of gas; in the case of offshore pipelines, filled with water or inert materials; and sealed at the ends. However, the pipeline need not be purged when the volume of gas is so small that there is no potential hazard.

(d) Whenever service to a customer is discontinued, one of the following must be complied with:

(1) The valve that is closed to prevent the flow of gas to the customer must be provided with a locking device or other means designed to prevent the opening of the valve by persons other than those authorized by the operator.

(2) A mechanical device or fitting that will prevent the flow of gas must be installed in the service line or in the meter assembly.

(3) The customer's piping must be physically disconnected from the gas supply and the open pipe ends sealed.

(e) If air is used for purging, the operator shall insure that a combustible mixture is not present after purging.

(f) Each abandoned vault must be filled with a suitable compacted material.

(g) For each abandoned offshore pipeline facility or each abandoned onshore pipeline facility that crosses over, under or through a commercially navigable waterway, the last operator of that facility must file a report upon abandonment of that facility.

(1) The preferred method to submit data on pipeline facilities abandoned after October 10, 2000 is to the National Pipeline Mapping System (NPMS) in accordance with the NPMS ''Standards for Pipeline and Liquefied Natural Gas Operator Submissions.'' To obtain a copy of the NPMS Standards, please refer to the NPMS homepage at *http://www.npms.phmsa.dot.gov* or contact the NPMS National Repository at 703–317–3073. A digital data format is preferred, but hard copy submissions are acceptable if they comply with the NPMS Standards. In addition to the NPMS-required attributes, operators must submit the date of abandonment, diameter, method of abandonment, and certification that, to the best of the operator's knowledge, all of the reasonably available information requested was provided and, to the best of the operator's knowledge, the abandonment was completed in accordance with applicable laws. Refer to the NPMS Standards for details in preparing your data for submission. The NPMS Standards also include details of how to submit data. Alternatively, operators may submit reports by mail, fax or e-mail to the Office of Pipeline Safety, Pipeline and Hazardous Materials Safety Administration, U.S. Department of Transportation, Information Resources Manager, PHP–10, 1200 New Jersey Avenue, SE., Washington, DC 20590-0001; fax

(202) 366–4566; e-mail *InformationResourcesManager@phmsa.dot.gov*. The information in the report must contain all reasonably available information related to the facility, including information in the possession of a third party. The report must contain the location, size, date, method of abandonment, and a certification that the facility has been abandoned in accordance with all applicable laws.

(2) [Reserved]

[Amdt. 192–8, 37 FR 20695, Oct. 3, 1972, as amended by Amdt. 192–27, 41 FR 34607, Aug. 16, 1976; Amdt. 192–71, 59 FR 6585, Feb. 11, 1994; Amdt. 192–89, 65 FR 54443, Sept. 8, 2000; 65 FR 57861, Sept. 26, 2000; 70 FR 11139, Mar. 8, 2005; Amdt. 192–103, 72 FR 4656, Feb. 1, 2007; 73 FR 16570, Mar. 28, 2008; 74 FR 2894, Jan. 16, 2009]

§ 192.731 Compressor stations: Inspection and testing of relief devices.

(a) Except for rupture discs, each pressure relieving device in a compressor station must be inspected and tested in accordance with §§ 192.739 and 192.743, and must be operated periodically to determine that it opens at the correct set pressure.

(b) Any defective or inadequate equipment found must be promptly repaired or replaced.

(c) Each remote control shutdown device must be inspected and tested at intervals not exceeding 15 months, but at least once each calendar year, to determine that it functions properly.

[35 FR 13257, Aug. 19, 1970, as amended by Amdt. 192–43, 47 FR 46851, Oct. 21, 1982]

§ 192.735 Compressor stations: Storage of combustible materials.

(a) Flammable or combustible materials in quantities beyond those required for everyday use, or other than those normally used in compressor buildings, must be stored a safe distance from the compressor building.

(b) Aboveground oil or gasoline storage tanks must be protected in accordance with National Fire Protection Association Standard No. 30.

§ 192.736 Compressor stations: Gas detection.

(a) Not later than September 16, 1996, each compressor building in a compressor station must have a fixed gas detection and alarm system, unless the building is—

(1) Constructed so that at least 50 percent of its upright side area is permanently open; or

(2) Located in an unattended field compressor station of 1,000 horsepower (746 kW) or less.

(b) Except when shutdown of the system is necessary for maintenance under paragraph (c) of this section, each gas detection and alarm system required by this section must—

(1) Continuously monitor the compressor building for a concentration of gas in air of not more than 25 percent of the lower explosive limit; and

(2) If that concentration of gas is detected, warn persons about to enter the building and persons inside the building of the danger.

(c) Each gas detection and alarm system required by this section must be maintained to function properly. The maintenance must include performance tests.

[58 FR 48464, Sept. 16, 1993, as amended by Amdt. 192–85, 63 FR 37504, July 13, 1998]

§ 192.739 Pressure limiting and regulating stations: Inspection and testing.

(a) Each pressure limiting station, relief device (except rupture discs), and pressure regulating station and its equipment must be subjected at intervals not exceeding 15 months, but at least once each calendar year, to inspections and tests to determine that it is—

(1) In good mechanical condition;

(2) Adequate from the standpoint of capacity and reliability of operation for the service in which it is employed;

(3) Except as provided in paragraph (b) of this section, set to control or relieve at the correct pressure consistent with the pressure limits of § 192.201(a); and

(4) Properly installed and protected from dirt, liquids, or other conditions that might prevent proper operation.

(b) For steel pipelines whose MAOP is determined under § 192.619(c), if the MAOP is 60 psi (414 kPa) gage or more, the control or relief pressure limit is as follows:

If the MAOP produces a hoop stress that is:	Then the pressure limit is:
Greater than 72 percent of SMYS.	MAOP plus 4 percent.
Unknown as a percentage of SMYS.	A pressure that will prevent unsafe operation of the pipeline considering its operating and maintenance history and MAOP.

[35 FR 13257, Aug. 19, 1970, as amended by Amdt. 192–43, 47 FR 46851, Oct. 21, 1982; Amdt. 192–93, 68 FR 53901, Sept. 15, 2003; Amdt. 192–96, 69 FR 27863, May 17, 2004]

§ 192.741 Pressure limiting and regulating stations: Telemetering or recording gauges.

(a) Each distribution system supplied by more than one district pressure regulating station must be equipped with telemetering or recording pressure gauges to indicate the gas pressure in the district.

(b) On distribution systems supplied by a single district pressure regulating station, the operator shall determine the necessity of installing telemetering or recording gauges in the district, taking into consideration the number of customers supplied, the operating pressures, the capacity of the installation, and other operating conditions.

(c) If there are indications of abnormally high or low pressure, the regulator and the auxiliary equipment must be inspected and the necessary measures employed to correct any unsatisfactory operating conditions.

§ 192.743 Pressure limiting and regulating stations: Capacity of relief devices.

(a) Pressure relief devices at pressure limiting stations and pressure regulating stations must have sufficient capacity to protect the facilities to which they are connected. Except as provided in § 192.739(b), the capacity must be consistent with the pressure limits of § 192.201(a). This capacity must be determined at intervals not exceeding 15 months, but at least once each calendar year, by testing the devices in place or by review and calculations.

(b) If review and calculations are used to determine if a device has sufficient capacity, the calculated capacity must be compared with the rated or experimentally determined relieving capacity of the device for the conditions under which it operates. After the initial calculations, subsequent calculations need not be made if the annual review documents that parameters have not changed to cause the rated or experimentally determined relieving capacity to be insufficient.

(c) If a relief device is of insufficient capacity, a new or additional device must be installed to provide the capacity required by paragraph (a) of this section.

[Amdt. 192–93, 68 FR 53901, Sept. 15, 2003, as amended by Amdt. 192–96, 69 FR 27863, May 17, 2004]

§ 192.745 Valve maintenance: Transmission lines.

(a) Each transmission line valve that might be required during any emergency must be inspected and partially operated at intervals not exceeding 15 months, but at least once each calendar year.

(b) Each operator must take prompt remedial action to correct any valve found inoperable, unless the operator designates an alternative valve.

[Amdt. 192–43, 47 FR 46851, Oct. 21, 1982, as amended by Amdt. 192–93, 68 FR 53901, Sept. 15, 2003]

§ 192.747 Valve maintenance: Distribution systems.

(a) Each valve, the use of which may be necessary for the safe operation of a distribution system, must be checked and serviced at intervals not exceeding 15 months, but at least once each calendar year.

(b) Each operator must take prompt remedial action to correct any valve found inoperable, unless the operator designates an alternative valve.

[Amdt. 192–43, 47 FR 46851, Oct. 21, 1982, as amended by Amdt. 192–93, 68 FR 53901, Sept. 15, 2003]

§ 192.749 Vault maintenance.

(a) Each vault housing pressure regulating and pressure limiting equipment, and having a volumetric internal content of 200 cubic feet (5.66 cubic meters) or more, must be inspected at intervals not exceeding 15 months, but at least once each calendar year, to determine that it is in good physical condition and adequately ventilated.

(b) If gas is found in the vault, the equipment in the vault must be inspected for leaks, and any leaks found must be repaired.

(c) The ventilating equipment must also be inspected to determine that it is functioning properly.

(d) Each vault cover must be inspected to assure that it does not present a hazard to public safety.

[35 FR 13257, Aug. 19, 1970, as amended by Amdt. 192–43, 47 FR 46851, Oct. 21, 1982; Amdt. 192–85, 63 FR 37504, July 13, 1998]

§ 192.751 Prevention of accidental ignition.

Each operator shall take steps to minimize the danger of accidental ignition of gas in any structure or area where the presence of gas constitutes a hazard of fire or explosion, including the following:

(a) When a hazardous amount of gas is being vented into open air, each potential source of ignition must be removed from the area and a fire extinguisher must be provided.

(b) Gas or electric welding or cutting may not be performed on pipe or on pipe components that contain a combustible mixture of gas and air in the area of work.

(c) Post warning signs, where appropriate.

§ 192.753 Caulked bell and spigot joints.

(a) Each cast iron caulked bell and spigot joint that is subject to pressures of more than 25 psi (172kPa) gage must be sealed with:

(1) A mechanical leak clamp; or

(2) A material or device which:

(i) Does not reduce the flexibility of the joint;

(ii) Permanently bonds, either chemically or mechanically, or both, with the bell and spigot metal surfaces or adjacent pipe metal surfaces; and

(iii) Seals and bonds in a manner that meets the strength, environmental, and chemical compatibility requirements of §§ 192.53 (a) and (b) and 192.143.

(b) Each cast iron caulked bell and spigot joint that is subject to pressures of 25 psi (172kPa) gage or less and is exposed for any reason must be sealed by a means other than caulking.

[35 FR 13257, Aug. 19, 1970, as amended by Amdt. 192–25, 41 FR 23680, June 11, 1976; Amdt. 192–85, 63 FR 37504, July 13, 1998; Amdt. 192–93, 68 FR 53901, Sept. 15, 2003]

§ 192.755 Protecting cast-iron pipelines.

When an operator has knowledge that the support for a segment of a buried cast-iron pipeline is disturbed:

(a) That segment of the pipeline must be protected, as necessary, against damage during the disturbance by:

(1) Vibrations from heavy construction equipment, trains, trucks, buses, or blasting;

(2) Impact forces by vehicles;

(3) Earth movement;

(4) Apparent future excavations near the pipeline; or

(5) Other foreseeable outside forces which may subject that segment of the pipeline to bending stress.

(b) As soon as feasible, appropriate steps must be taken to provide permanent protection for the disturbed segment from damage that might result from external loads, including compliance with applicable requirements of §§ 192.317(a), 192.319, and 192.361(b)–(d).

[Amdt. 192–23, 41 FR 13589, Mar. 31, 1976]

Subpart N—Qualification of Pipeline Personnel

SOURCE: Amdt. 192–86, 64 FR 46865, Aug. 27, 1999, unless otherwise noted.

§ 192.801 Scope.

(a) This subpart prescribes the minimum requirements for operator qualification of individuals performing covered tasks on a pipeline facility.

(b) For the purpose of this subpart, a covered task is an activity, identified by the operator, that:

(1) Is performed on a pipeline facility;

(2) Is an operations or maintenance task;

(3) Is performed as a requirement of this part; and

(4) Affects the operation or integrity of the pipeline.

§ 192.803 Definitions.

Abnormal operating condition means a condition identified by the operator that may indicate a malfunction of a component or deviation from normal operations that may:

(a) Indicate a condition exceeding design limits; or

(b) Result in a hazard(s) to persons, property, or the environment.

Evaluation means a process, established and documented by the operator, to determine an individual's ability to perform a covered task by any of the following:

(a) Written examination;

(b) Oral examination;

(c) Work performance history review;

(d) Observation during:

(1) Performance on the job,

(2) On the job training, or

(3) Simulations;

(e) Other forms of assessment.

Qualified means that an individual has been evaluated and can:

(a) Perform assigned covered tasks; and

(b) Recognize and react to abnormal operating conditions.

[Amdt. 192–86, 64 FR 46865, Aug. 27, 1999, as amended by Amdt. 192–90, 66 FR 43523, Aug. 20, 2001]

§ 192.805 Qualification program.

Each operator shall have and follow a written qualification program. The program shall include provisions to:

(a) Identify covered tasks;

(b) Ensure through evaluation that individuals performing covered tasks are qualified;

(c) Allow individuals that are not qualified pursuant to this subpart to perform a covered task if directed and observed by an individual that is qualified;

(d) Evaluate an individual if the operator has reason to believe that the individual's performance of a covered task contributed to an incident as defined in Part 191;

(e) Evaluate an individual if the operator has reason to believe that the individual is no longer qualified to perform a covered task;

(f) Communicate changes that affect covered tasks to individuals performing those covered tasks;

(g) Identify those covered tasks and the intervals at which evaluation of the individual's qualifications is needed;

(h) After December 16, 2004, provide training, as appropriate, to ensure that individuals performing covered tasks have the necessary knowledge and skills to perform the tasks in a manner that ensures the safe operation of pipeline facilities; and

(i) After December 16, 2004, notify the Administrator or a state agency participating under 49 U.S.C. Chapter 601 if the operator significantly modifies the program after the Administrator or state agency has verified that it complies with this section.

[Amdt. 192–86, 64 FR 46865, Aug. 27, 1999, as amended by Amdt. 192–100, 70 FR 10335, Mar. 3, 2005]

§ 192.807 Recordkeeping.

Each operator shall maintain records that demonstrate compliance with this subpart.

(a) Qualification records shall include:

(1) Identification of qualified individual(s);

(2) Identification of the covered tasks the individual is qualified to perform;

(3) Date(s) of current qualification; and

(4) Qualification method(s).

(b) Records supporting an individual's current qualification shall be maintained while the individual is performing the covered task. Records of prior qualification and records of individuals no longer performing covered tasks shall be retained for a period of five years.

§ 192.809 General.

(a) Operators must have a written qualification program by April 27, 2001. The program must be available for review by the Administrator or by a state agency participating under 49 U.S.C. Chapter 601 if the program is under the authority of that state agency.

(b) Operators must complete the qualification of individuals performing covered tasks by October 28, 2002.

(c) Work performance history review may be used as a sole evaluation method for individuals who were performing a covered task prior to October 26, 1999.

(d) After October 28, 2002, work performance history may not be used as a sole evaluation method.

(e) After December 16, 2004, observation of on-the-job performance may not be used as the sole method of evaluation.

[Amdt. 192–86, 64 FR 46865, Aug. 27, 1999, as amended by Amdt. 192–90, 66 FR 43524, Aug. 20, 2001; Amdt. 192–100, 70 FR 10335, Mar. 3, 2005]

Subpart O—Gas Transmission Pipeline Integrity Management

SOURCE: 68 FR 69817, Dec. 15, 2003, unless otherwise noted.

§ 192.901 What do the regulations in this subpart cover?

This subpart prescribes minimum requirements for an integrity management program on any gas transmission pipeline covered under this part. For gas transmission pipelines constructed of plastic, only the requirements in §§ 192.917, 192.921, 192.935 and 192.937 apply.

§ 192.903 What definitions apply to this subpart?

The following definitions apply to this subpart:

Assessment is the use of testing techniques as allowed in this subpart to ascertain the condition of a covered pipeline segment.

Confirmatory direct assessment is an integrity assessment method using more focused application of the principles and techniques of direct assessment to identify internal and external corrosion in a covered transmission pipeline segment.

Covered segment or covered pipeline segment means a segment of gas transmission pipeline located in a high consequence area. The terms gas and transmission line are defined in § 192.3.

Direct assessment is an integrity assessment method that utilizes a process to evaluate certain threats (*i.e.*, external corrosion, internal corrosion and stress corrosion cracking) to a covered pipeline segment's integrity. The process includes the gathering and integration of risk factor data, indirect examination or analysis to identify areas of suspected corrosion, direct examination of the pipeline in these areas, and post assessment evaluation.

High consequence area means an area established by one of the methods described in paragraphs (1) or (2) as follows:

(1) An area defined as—

(i) A Class 3 location under § 192.5; or

(ii) A Class 4 location under § 192.5; or

(iii) Any area in a Class 1 or Class 2 location where the potential impact radius is greater than 660 feet (200 meters), and the area within a potential impact circle contains 20 or more buildings intended for human occupancy; or

(iv) Any area in a Class 1 or Class 2 location where the potential impact circle contains an identified site.

(2) The area within a potential impact circle containing—

(i) 20 or more buildings intended for human occupancy, unless the exception in paragraph (4) applies; or

(ii) An identified site.

(3) Where a potential impact circle is calculated under either method (1) or (2) to establish a high consequence area, the length of the high consequence area extends axially along the length of the pipeline from the outermost edge of the first potential impact circle that contains either an identified site or 20 or more buildings intended for human occupancy to the outermost edge of the last contiguous potential impact circle that contains either an identified site or 20 or more buildings intended for human occupancy. (See figure E.I.A. in appendix E.)

(4) If in identifying a high consequence area under paragraph (1)(iii) of this definition or paragraph (2)(i) of this definition, the radius of the potential impact circle is greater than 660 feet (200 meters), the operator may identify a high consequence area based on a prorated number of buildings intended for human occupancy with a distance of 660 feet (200 meters) from the centerline of the pipeline until December 17, 2006. If an operator chooses this approach, the operator must prorate the number of buildings intended

for human occupancy based on the ratio of an area with a radius of 660 feet (200 meters) to the area of the potential impact circle (i.e., the prorated number of buildings intended for human occupancy is equal to 20 × (660 feet) [or 200 meters]/potential impact radius in feet [or meters]^2).

Identified site means each of the following areas:

(a) An outside area or open structure that is occupied by twenty (20) or more persons on at least 50 days in any twelve (12)-month period. (The days need not be consecutive.) Examples include but are not limited to, beaches, playgrounds, recreational facilities, camping grounds, outdoor theaters, stadiums, recreational areas near a body of water, or areas outside a rural building such as a religious facility; or

(b) A building that is occupied by twenty (20) or more persons on at least five (5) days a week for ten (10) weeks in any twelve (12)-month period. (The days and weeks need not be consecutive.) Examples include, but are not limited to, religious facilities, office buildings, community centers, general stores, 4-H facilities, or roller skating rinks; or

(c) A facility occupied by persons who are confined, are of impaired mobility, or would be difficult to evacuate. Examples include but are not limited to hospitals, prisons, schools, day-care facilities, retirement facilities or assisted-living facilities.

Potential impact circle is a circle of radius equal to the potential impact radius (PIR).

Potential impact radius (PIR) means the radius of a circle within which the potential failure of a pipeline could have significant impact on people or property. PIR is determined by the formula $r = 0.69^*$ (square root of (p^*d^2)), where 'r' is the radius of a circular area in feet surrounding the point of failure, 'p' is the maximum allowable operating pressure (MAOP) in the pipeline segment in pounds per square inch and 'd' is the nominal diameter of the pipeline in inches.

NOTE: 0.69 is the factor for natural gas. This number will vary for other gases depending upon their heat of combustion. An operator transporting gas other than natural gas must use section 3.2 of ASME/ANSI B31.8S–2001 (Supplement to ASME B31.8; incorporated by reference, *see* §192.7) to calculate the impact radius formula.

Remediation is a repair or mitigation activity an operator takes on a covered segment to limit or reduce the probability of an undesired event occurring or the expected consequences from the event.

[68 FR 69817, Dec. 15, 2003, as amended by Amdt. 192–95, 69 FR 18231, Apr. 6, 2004; Amdt. 192–95, 69 FR 29904, May 26, 2004; Amdt. 192–103, 72 FR 4657, Feb. 1, 2007]

§ 192.905 How does an operator identify a high consequence area?

(a) *General.* To determine which segments of an operator's transmission pipeline system are covered by this subpart, an operator must identify the high consequence areas. An operator must use method (1) or (2) from the definition in §192.903 to identify a high consequence area. An operator may apply one method to its entire pipeline system, or an operator may apply one method to individual portions of the pipeline system. An operator must describe in its integrity management program which method it is applying to each portion of the operator's pipeline system. The description must include the potential impact radius when utilized to establish a high consequence area. (*See* appendix E.I. for guidance on identifying high consequence areas.)

(b)(1) *Identified sites.* An operator must identify an identified site, for purposes of this subpart, from information the operator has obtained from routine operation and maintenance activities and from public officials with safety or emergency response or planning responsibilities who indicate to the operator that they know of locations that meet the identified site criteria. These public officials could include officials on a local emergency planning commission or relevant Native American tribal officials.

(2) If a public official with safety or emergency response or planning responsibilities informs an operator that it does not have the information to identify an identified site, the operator must use one of the following sources, as appropriate, to identify these sites.

(i) Visible marking (*e.g.*, a sign); or

(ii) The site is licensed or registered by a Federal, State, or local government agency; or

(iii) The site is on a list (including a list on an internet web site) or map maintained by or available from a Federal, State, or local government agency and available to the general public.

(c) *Newly identified areas.* When an operator has information that the area around a pipeline segment not previously identified as a high consequence area could satisfy any of the definitions in § 192.903, the operator must complete the evaluation using method (1) or (2). If the segment is determined to meet the definition as a high consequence area, it must be incorporated into the operator's baseline assessment plan as a high consequence area within one year from the date the area is identified.

§ 192.907 What must an operator do to implement this subpart?

(a) *General.* No later than December 17, 2004, an operator of a covered pipeline segment must develop and follow a written integrity management program that contains all the elements described in § 192.911 and that addresses the risks on each covered transmission pipeline segment. The initial integrity management program must consist, at a minimum, of a framework that describes the process for implementing each program element, how relevant decisions will be made and by whom, a time line for completing the work to implement the program element, and how information gained from experience will be continuously incorporated into the program. The framework will evolve into a more detailed and comprehensive program. An operator must make continual improvements to the program.

(b) *Implementation Standards.* In carrying out this subpart, an operator must follow the requirements of this subpart and of ASME/ANSI B31.8S (incorporated by reference, *see* § 192.7) and its appendices, where specified. An operator may follow an equivalent standard or practice only when the operator demonstrates the alternative standard or practice provides an equivalent level of safety to the public and property. In the event of a conflict between this subpart and ASME/ANSI B31.8S, the requirements in this subpart control.

§ 192.909 How can an operator change its integrity management program?

(a) *General.* An operator must document any change to its program and the reasons for the change before implementing the change.

(b) *Notification.* An operator must notify OPS, in accordance with § 192.949, of any change to the program that may substantially affect the program's implementation or may significantly modify the program or schedule for carrying out the program elements. An operator must also notify a State or local pipeline safety authority when either a covered segment is located in a State where OPS has an interstate agent agreement, or an intrastate covered segment is regulated by that State. An operator must provide the notification within 30 days after adopting this type of change into its program.

[68 FR 69817, Dec. 15, 2003, as amended by Amdt. 192–95, 69 FR 18231, Apr. 6, 2004]

§ 192.911 What are the elements of an integrity management program?

An operator's initial integrity management program begins with a framework (*see* § 192.907) and evolves into a more detailed and comprehensive integrity management program, as information is gained and incorporated into the program. An operator must make continual improvements to its program. The initial program framework and subsequent program must, at minimum, contain the following elements. (When indicated, refer to ASME/ANSI B31.8S (incorporated by reference, *see* § 192.7) for more detailed information on the listed element.)

(a) An identification of all high consequence areas, in accordance with § 192.905.

(b) A baseline assessment plan meeting the requirements of § 192.919 and § 192.921.

(c) An identification of threats to each covered pipeline segment, which must include data integration and a risk assessment. An operator must use the threat identification and risk assessment to prioritize covered segments for assessment (§ 192.917) and to

evaluate the merits of additional preventive and mitigative measures (§ 192.935) for each covered segment.

(d) A direct assessment plan, if applicable, meeting the requirements of § 192.923, and depending on the threat assessed, of §§ 192.925, 192.927, or 192.929.

(e) Provisions meeting the requirements of § 192.933 for remediating conditions found during an integrity assessment.

(f) A process for continual evaluation and assessment meeting the requirements of § 192.937.

(g) If applicable, a plan for confirmatory direct assessment meeting the requirements of § 192.931.

(h) Provisions meeting the requirements of § 192.935 for adding preventive and mitigative measures to protect the high consequence area.

(i) A performance plan as outlined in ASME/ANSI B31.8S, section 9 that includes performance measures meeting the requirements of § 192.945.

(j) Record keeping provisions meeting the requirements of § 192.947.

(k) A management of change process as outlined in ASME/ANSI B31.8S, section 11.

(l) A quality assurance process as outlined in ASME/ANSI B31.8S, section 12.

(m) A communication plan that includes the elements of ASME/ANSI B31.8S, section 10, and that includes procedures for addressing safety concerns raised by—

(1) OPS; and

(2) A State or local pipeline safety authority when a covered segment is located in a State where OPS has an interstate agent agreement.

(n) Procedures for providing (when requested), by electronic or other means, a copy of the operator's risk analysis or integrity management program to—

(1) OPS; and

(2) A State or local pipeline safety authority when a covered segment is located in a State where OPS has an interstate agent agreement.

(o) Procedures for ensuring that each integrity assessment is being conducted in a manner that minimizes environmental and safety risks.

(p) A process for identification and assessment of newly-identified high consequence areas. (*See* § 192.905 and § 192.921.)

[68 FR 69817, Dec. 15, 2003, as amended by Amdt. 192–95, 69 FR 18231, Apr. 6, 2004]

§ 192.913 When may an operator deviate its program from certain requirements of this subpart?

(a) *General*. ASME/ANSI B31.8S (incorporated by reference, *see* § 192.7) provides the essential features of a performance-based or a prescriptive integrity management program. An operator that uses a performance-based approach that satisfies the requirements for exceptional performance in paragraph (b) of this section may deviate from certain requirements in this subpart, as provided in paragraph (c) of this section.

(b) *Exceptional performance*. An operator must be able to demonstrate the exceptional performance of its integrity management program through the following actions.

(1) To deviate from any of the requirements set forth in paragraph (c) of this section, an operator must have a performance-based integrity management program that meets or exceed the performance-based requirements of ASME/ANSI B31.8S and includes, at a minimum, the following elements—

(i) A comprehensive process for risk analysis;

(ii) All risk factor data used to support the program;

(iii) A comprehensive data integration process;

(iv) A procedure for applying lessons learned from assessment of covered pipeline segments to pipeline segments not covered by this subpart;

(v) A procedure for evaluating every incident, including its cause, within the operator's sector of the pipeline industry for implications both to the operator's pipeline system and to the operator's integrity management program;

(vi) A performance matrix that demonstrates the program has been effective in ensuring the integrity of the covered segments by controlling the identified threats to the covered segments;

(vii) Semi-annual performance measures beyond those required in § 192.945

that are part of the operator's performance plan. (*See* § 192.911(i).) An operator must submit these measures, by electronic or other means, on a semi-annual frequency to OPS in accordance with § 192.951; and

(viii) An analysis that supports the desired integrity reassessment interval and the remediation methods to be used for all covered segments.

(2) In addition to the requirements for the performance-based plan, an operator must—

(i) Have completed at least two integrity assessments on each covered pipeline segment the operator is including under the performance-based approach, and be able to demonstrate that each assessment effectively addressed the identified threats on the covered segment.

(ii) Remediate all anomalies identified in the more recent assessment according to the requirements in § 192.933, and incorporate the results and lessons learned from the more recent assessment into the operator's data integration and risk assessment.

(c) *Deviation*. Once an operator has demonstrated that it has satisfied the requirements of paragraph (b) of this section, the operator may deviate from the prescriptive requirements of ASME/ANSI B31.8S and of this subpart only in the following instances.

(1) The time frame for reassessment as provided in § 192.939 except that reassessment by some method allowed under this subpart (*e.g.*, confirmatory direct assessment) must be carried out at intervals no longer than seven years;

(2) The time frame for remediation as provided in § 192.933 if the operator demonstrates the time frame will not jeopardize the safety of the covered segment.

[68 FR 69817, Dec. 15, 2003, as amended by Amdt. 192–95, 69 FR 18231, Apr. 6, 2004]

§ 192.915 What knowledge and training must personnel have to carry out an integrity management program?

(a) *Supervisory personnel*. The integrity management program must provide that each supervisor whose responsibilities relate to the integrity management program possesses and maintains a thorough knowledge of the integrity management program and of the elements for which the supervisor is responsible. The program must provide that any person who qualifies as a supervisor for the integrity management program has appropriate training or experience in the area for which the person is responsible.

(b) *Persons who carry out assessments and evaluate assessment results*. The integrity management program must provide criteria for the qualification of any person—

(1) Who conducts an integrity assessment allowed under this subpart; or

(2) Who reviews and analyzes the results from an integrity assessment and evaluation; or

(3) Who makes decisions on actions to be taken based on these assessments.

(c) *Persons responsible for preventive and mitigative measures*. The integrity management program must provide criteria for the qualification of any person—

(1) Who implements preventive and mitigative measures to carry out this subpart, including the marking and locating of buried structures; or

(2) Who directly supervises excavation work carried out in conjunction with an integrity assessment.

§ 192.917 How does an operator identify potential threats to pipeline integrity and use the threat identification in its integrity program?

(a) *Threat identification*. An operator must identify and evaluate all potential threats to each covered pipeline segment. Potential threats that an operator must consider include, but are not limited to, the threats listed in ASME/ANSI B31.8S (incorporated by reference, *see* § 192.7), section 2, which are grouped under the following four categories:

(1) Time dependent threats such as internal corrosion, external corrosion, and stress corrosion cracking;

(2) Static or resident threats, such as fabrication or construction defects;

(3) Time independent threats such as third party damage and outside force damage; and

(4) Human error.

(b) *Data gathering and integration*. To identify and evaluate the potential threats to a covered pipeline segment,

an operator must gather and integrate existing data and information on the entire pipeline that could be relevant to the covered segment. In performing this data gathering and integration, an operator must follow the requirements in ASME/ANSI B31.8S, section 4. At a minimum, an operator must gather and evaluate the set of data specified in Appendix A to ASME/ANSI B31.8S, and consider both on the covered segment and similar non-covered segments, past incident history, corrosion control records, continuing surveillance records, patrolling records, maintenance history, internal inspection records and all other conditions specific to each pipeline.

(c) *Risk assessment*. An operator must conduct a risk assessment that follows ASME/ANSI B31.8S, section 5, and considers the identified threats for each covered segment. An operator must use the risk assessment to prioritize the covered segments for the baseline and continual reassessments (§§ 192.919, 192.921, 192.937), and to determine what additional preventive and mitigative measures are needed (§ 192.935) for the covered segment.

(d) *Plastic transmission pipeline*. An operator of a plastic transmission pipeline must assess the threats to each covered segment using the information in sections 4 and 5 of ASME B31.8S, and consider any threats unique to the integrity of plastic pipe.

(e) *Actions to address particular threats*. If an operator identifies any of the following threats, the operator must take the following actions to address the threat.

(1) *Third party damage*. An operator must utilize the data integration required in paragraph (b) of this section and ASME/ANSI B31.8S, Appendix A7 to determine the susceptibility of each covered segment to the threat of third party damage. If an operator identifies the threat of third party damage, the operator must implement comprehensive additional preventive measures in accordance with § 192.935 and monitor the effectiveness of the preventive measures. If, in conducting a baseline assessment under § 192.921, or a reassessment under § 192.937, an operator uses an internal inspection tool or external corrosion direct assessment, the operator must integrate data from these assessments with data related to any encroachment or foreign line crossing on the covered segment, to define where potential indications of third party damage may exist in the covered segment.

An operator must also have procedures in its integrity management program addressing actions it will take to respond to findings from this data integration.

(2) *Cyclic fatigue*. An operator must evaluate whether cyclic fatigue or other loading condition (including ground movement, suspension bridge condition) could lead to a failure of a deformation, including a dent or gouge, or other defect in the covered segment. An evaluation must assume the presence of threats in the covered segment that could be exacerbated by cyclic fatigue. An operator must use the results from the evaluation together with the criteria used to evaluate the significance of this threat to the covered segment to prioritize the integrity baseline assessment or reassessment.

(3) *Manufacturing and construction defects*. If an operator identifies the threat of manufacturing and construction defects (including seam defects) in the covered segment, an operator must analyze the covered segment to determine the risk of failure from these defects. The analysis must consider the results of prior assessments on the covered segment. An operator may consider manufacturing and construction related defects to be stable defects if the operating pressure on the covered segment has not increased over the maximum operating pressure experienced during the five years preceding identification of the high consequence area. If any of the following changes occur in the covered segment, an operator must prioritize the covered segment as a high risk segment for the baseline assessment or a subsequent reassessment.

(i) Operating pressure increases above the maximum operating pressure experienced during the preceding five years;

(ii) MAOP increases; or

(iii) The stresses leading to cyclic fatigue increase.

(4) *ERW pipe.* If a covered pipeline segment contains low frequency electric resistance welded pipe (ERW), lap welded pipe or other pipe that satisfies the conditions specified in ASME/ANSI B31.8S, Appendices A4.3 and A4.4, and any covered or noncovered segment in the pipeline system with such pipe has experienced seam failure, or operating pressure on the covered segment has increased over the maximum operating pressure experienced during the preceding five years, an operator must select an assessment technology or technologies with a proven application capable of assessing seam integrity and seam corrosion anomalies. The operator must prioritize the covered segment as a high risk segment for the baseline assessment or a subsequent reassessment.

(5) *Corrosion.* If an operator identifies corrosion on a covered pipeline segment that could adversely affect the integrity of the line (conditions specified in § 192.933), the operator must evaluate and remediate, as necessary, all pipeline segments (both covered and non-covered) with similar material coating and environmental characteristics. An operator must establish a schedule for evaluating and remediating, as necessary, the similar segments that is consistent with the operator's established operating and maintenance procedures under part 192 for testing and repair.

[68 FR 69817, Dec. 15, 2003, as amended by Amdt. 192–95, 69 FR 18231, Apr. 6, 2004]

§ 192.919 What must be in the baseline assessment plan?

An operator must include each of the following elements in its written baseline assessment plan:

(a) Identification of the potential threats to each covered pipeline segment and the information supporting the threat identification. (*See* § 192.917.);

(b) The methods selected to assess the integrity of the line pipe, including an explanation of why the assessment method was selected to address the identified threats to each covered segment. The integrity assessment method an operator uses must be based on the threats identified to the covered segment. (*See* § 192.917.) More than one method may be required to address all the threats to the covered pipeline segment;

(c) A schedule for completing the integrity assessment of all covered segments, including risk factors considered in establishing the assessment schedule;

(d) If applicable, a direct assessment plan that meets the requirements of §§ 192.923, and depending on the threat to be addressed, of § 192.925, § 192.927, or § 192.929; and

(e) A procedure to ensure that the baseline assessment is being conducted in a manner that minimizes environmental and safety risks.

§ 192.921 How is the baseline assessment to be conducted?

(a) *Assessment methods.* An operator must assess the integrity of the line pipe in each covered segment by applying one or more of the following methods depending on the threats to which the covered segment is susceptible. An operator must select the method or methods best suited to address the threats identified to the covered segment (*See* § 192.917).

(1) Internal inspection tool or tools capable of detecting corrosion, and any other threats to which the covered segment is susceptible. An operator must follow ASME/ANSI B31.8S (incorporated by reference, *see* § 192.7), section 6.2 in selecting the appropriate internal inspection tools for the covered segment.

(2) Pressure test conducted in accordance with subpart J of this part. An operator must use the test pressures specified in Table 3 of section 5 of ASME/ANSI B31.8S, to justify an extended reassessment interval in accordance with § 192.939.

(3) Direct assessment to address threats of external corrosion, internal corrosion, and stress corrosion cracking. An operator must conduct the direct assessment in accordance with the requirements listed in § 192.923 and with, as applicable, the requirements specified in §§ 192.925, 192.927 or 192.929;

(4) Other technology that an operator demonstrates can provide an equivalent understanding of the condition of the line pipe. An operator choosing this

option must notify the Office of Pipeline Safety (OPS) 180 days before conducting the assessment, in accordance with § 192.949. An operator must also notify a State or local pipeline safety authority when either a covered segment is located in a State where OPS has an interstate agent agreement, or an intrastate covered segment is regulated by that State.

(b) *Prioritizing segments.* An operator must prioritize the covered pipeline segments for the baseline assessment according to a risk analysis that considers the potential threats to each covered segment. The risk analysis must comply with the requirements in § 192.917.

(c) *Assessment for particular threats.* In choosing an assessment method for the baseline assessment of each covered segment, an operator must take the actions required in § 192.917(e) to address particular threats that it has identified.

(d) *Time period.* An operator must prioritize all the covered segments for assessment in accordance with § 192.917 (c) and paragraph (b) of this section. An operator must assess at least 50% of the covered segments beginning with the highest risk segments, by December 17, 2007. An operator must complete the baseline assessment of all covered segments by December 17, 2012.

(e) *Prior assessment.* An operator may use a prior integrity assessment conducted before December 17, 2002 as a baseline assessment for the covered segment, if the integrity assessment meets the baseline requirements in this subpart and subsequent remedial actions to address the conditions listed in § 192.933 have been carried out. In addition, if an operator uses this prior assessment as its baseline assessment, the operator must reassess the line pipe in the covered segment according to the requirements of § 192.937 and § 192.939.

(f) *Newly identified areas.* When an operator identifies a new high consequence area (*see* § 192.905), an operator must complete the baseline assessment of the line pipe in the newly identified high consequence area within ten (10) years from the date the area is identified.

(g) *Newly installed pipe.* An operator must complete the baseline assessment of a newly-installed segment of pipe covered by this subpart within ten (10) years from the date the pipe is installed. An operator may conduct a pressure test in accordance with paragraph (a)(2) of this section, to satisfy the requirement for a baseline assessment.

(h) *Plastic transmission pipeline.* If the threat analysis required in § 192.917(d) on a plastic transmission pipeline indicates that a covered segment is susceptible to failure from causes other than third-party damage, an operator must conduct a baseline assessment of the segment in accordance with the requirements of this section and of § 192.917. The operator must justify the use of an alternative assessment method that will address the identified threats to the covered segment.

[68 FR 69817, Dec. 15, 2003, as amended by Amdt. 192–95, 69 FR 18232, Apr. 6, 2004]

§ 192.923 How is direct assessment used and for what threats?

(a) *General.* An operator may use direct assessment either as a primary assessment method or as a supplement to the other assessment methods allowed under this subpart. An operator may only use direct assessment as the primary assessment method to address the identified threats of external corrosion (ECDA), internal corrosion (ICDA), and stress corrosion cracking (SCCDA).

(b) *Primary method.* An operator using direct assessment as a primary assessment method must have a plan that complies with the requirements in—

(1) ASME/ANSI B31.8S (incorporated by reference, *see* § 192.7), section 6.4; NACE SP0502–2008 (incorporated by reference, *see* § 192.7); and § 192.925 if addressing external corrosion (ECDA).

(2) ASME/ANSI B31.8S, section 6.4 and appendix B2, and § 192.927 if addressing internal corrosion (ICDA).

(3) ASME/ANSI B31.8S, appendix A3, and § 192.929 if addressing stress corrosion cracking (SCCDA).

(c) *Supplemental method.* An operator using direct assessment as a supplemental assessment method for any applicable threat must have a plan that

follows the requirements for confirmatory direct assessment in § 192.931.

[68 FR 69817, Dec. 15, 2003, as amended by Amdt. 192–114, 75 FR 48604, Aug. 11, 2010]

§ 192.925 What are the requirements for using External Corrosion Direct Assessment (ECDA)?

(a) *Definition*. ECDA is a four-step process that combines preassessment, indirect inspection, direct examination, and post assessment to evaluate the threat of external corrosion to the integrity of a pipeline.

(b) *General requirements*. An operator that uses direct assessment to assess the threat of external corrosion must follow the requirements in this section, in ASME/ANSI B31.8S (incorporated by reference, *see* § 192.7), section 6.4, and in NACE SP0502–2008 (incorporated by reference, *see* § 192.7). An operator must develop and implement a direct assessment plan that has procedures addressing preassessment, indirect examination, direct examination, and post-assessment. If the ECDA detects pipeline coating damage, the operator must also integrate the data from the ECDA with other information from the data integration (§ 192.917(b)) to evaluate the covered segment for the threat of third party damage, and to address the threat as required by § 192.917(e)(1).

(1) *Preassessment*. In addition to the requirements in ASME/ANSI B31.8S section 6.4 and NACE SP0502–2008, section 3, the plan's procedures for preassessment must include—

(i) Provisions for applying more restrictive criteria when conducting ECDA for the first time on a covered segment; and

(ii) The basis on which an operator selects at least two different, but complementary indirect assessment tools to assess each ECDA Region. If an operator utilizes an indirect inspection method that is not discussed in Appendix A of NACE SP0502–2008, the operator must demonstrate the applicability, validation basis, equipment used, application procedure, and utilization of data for the inspection method.

(2) *Indirect examination*. In addition to the requirements in ASME/ANSI B31.8S section 6.4 and NACE SP0502–2008, section 4, the plan's procedures for indirect examination of the ECDA regions must include—

(i) Provisions for applying more restrictive criteria when conducting ECDA for the first time on a covered segment;

(ii) Criteria for identifying and documenting those indications that must be considered for excavation and direct examination. Minimum identification criteria include the known sensitivities of assessment tools, the procedures for using each tool, and the approach to be used for decreasing the physical spacing of indirect assessment tool readings when the presence of a defect is suspected;

(iii) Criteria for defining the urgency of excavation and direct examination of each indication identified during the indirect examination. These criteria must specify how an operator will define the urgency of excavating the indication as immediate, scheduled or monitored; and

(iv) Criteria for scheduling excavation of indications for each urgency level.

(3) *Direct examination*. In addition to the requirements in ASME/ANSI B31.8S section 6.4 and NACE SP0502–2008, section 5, the plan's procedures for direct examination of indications from the indirect examination must include—

(i) Provisions for applying more restrictive criteria when conducting ECDA for the first time on a covered segment;

(ii) Criteria for deciding what action should be taken if either:

(A) Corrosion defects are discovered that exceed allowable limits (Section 5.5.2.2 of NACE SP0502–2008), or

(B) Root cause analysis reveals conditions for which ECDA is not suitable (Section 5.6.2 of NACE SP0502–2008);

(iii) Criteria and notification procedures for any changes in the ECDA Plan, including changes that affect the severity classification, the priority of direct examination, and the time frame for direct examination of indications; and

(iv) Criteria that describe how and on what basis an operator will reclassify and reprioritize any of the provisions that are specified in section 5.9 of NACE SP0502–2008.

(4) *Post assessment and continuing evaluation.* In addition to the requirements in ASME/ANSI B31.8S section 6.4 and NACE SP0502–2008, section 6, the plan's procedures for post assessment of the effectiveness of the ECDA process must include—

(i) Measures for evaluating the long-term effectiveness of ECDA in addressing external corrosion in covered segments; and

(ii) Criteria for evaluating whether conditions discovered by direct examination of indications in each ECDA region indicate a need for reassessment of the covered segment at an interval less than that specified in § 192.939. (See Appendix D of NACE SP0502–2008.)

[68 FR 69817, Dec. 15, 2003, as amended by Amdt. 192–95, 69 FR 29904, May 26, 2004; Amdt. 192–114, 75 FR 48604, Aug. 11, 2010]

§ 192.927 What are the requirements for using Internal Corrosion Direct Assessment (ICDA)?

(a) *Definition.* Internal Corrosion Direct Assessment (ICDA) is a process an operator uses to identify areas along the pipeline where fluid or other electrolyte introduced during normal operation or by an upset condition may reside, and then focuses direct examination on the locations in covered segments where internal corrosion is most likely to exist. The process identifies the potential for internal corrosion caused by microorganisms, or fluid with CO_2, O_2, hydrogen sulfide or other contaminants present in the gas.

(b) *General requirements.* An operator using direct assessment as an assessment method to address internal corrosion in a covered pipeline segment must follow the requirements in this section and in ASME/ANSI B31.8S (incorporated by reference, *see* § 192.7), section 6.4 and appendix B2. The ICDA process described in this section applies only for a segment of pipe transporting nominally dry natural gas, and not for a segment with electrolyte nominally present in the gas stream. If an operator uses ICDA to assess a covered segment operating with electrolyte present in the gas stream, the operator must develop a plan that demonstrates how it will conduct ICDA in the segment to effectively address internal corrosion, and must provide notification in accordance with § 192.921 (a)(4) or § 192.937(c)(4).

(c) *The ICDA plan.* An operator must develop and follow an ICDA plan that provides for preassessment, identification of ICDA regions and excavation locations, detailed examination of pipe at excavation locations, and post-assessment evaluation and monitoring.

(1) *Preassessment.* In the preassessment stage, an operator must gather and integrate data and information needed to evaluate the feasibility of ICDA for the covered segment, and to support use of a model to identify the locations along the pipe segment where electrolyte may accumulate, to identify ICDA regions, and to identify areas within the covered segment where liquids may potentially be entrained. This data and information includes, but is not limited to—

(i) All data elements listed in appendix A2 of ASME/ANSI B31.8S;

(ii) Information needed to support use of a model that an operator must use to identify areas along the pipeline where internal corrosion is most likely to occur. (*See* paragraph (a) of this section.) This information, includes, but is not limited to, location of all gas input and withdrawal points on the line; location of all low points on covered segments such as sags, drips, inclines, valves, manifolds, dead-legs, and traps; the elevation profile of the pipeline in sufficient detail that angles of inclination can be calculated for all pipe segments; and the diameter of the pipeline, and the range of expected gas velocities in the pipeline;

(iii) Operating experience data that would indicate historic upsets in gas conditions, locations where these upsets have occurred, and potential damage resulting from these upset conditions; and

(iv) Information on covered segments where cleaning pigs may not have been used or where cleaning pigs may deposit electrolytes.

(2) *ICDA region identification.* An operator's plan must identify where all ICDA Regions are located in the transmission system, in which covered segments are located. An ICDA Region extends from the location where liquid

may first enter the pipeline and encompasses the entire area along the pipeline where internal corrosion may occur and where further evaluation is needed. An ICDA Region may encompass one or more covered segments. In the identification process, an operator must use the model in GRI 02–0057, ''Internal Corrosion Direct Assessment of Gas Transmission Pipelines—Methodology,'' (incorporated by reference, *see* §192.7). An operator may use another model if the operator demonstrates it is equivalent to the one shown in GRI 02–0057. A model must consider changes in pipe diameter, locations where gas enters a line (potential to introduce liquid) and locations down stream of gas draw-offs (where gas velocity is reduced) to define the critical pipe angle of inclination above which water film cannot be transported by the gas.

(3) *Identification of locations for excavation and direct examination*. An operator's plan must identify the locations where internal corrosion is most likely in each ICDA region. In the location identification process, an operator must identify a minimum of two locations for excavation within each ICDA Region within a covered segment and must perform a direct examination for internal corrosion at each location, using ultrasonic thickness measurements, radiography, or other generally accepted measurement technique. One location must be the low point (*e.g.*, sags, drips, valves, manifolds, deadlegs, traps) within the covered segment nearest to the beginning of the ICDA Region. The second location must be further downstream, within a covered segment, near the end of the ICDA Region. If corrosion exists at either location, the operator must—

(i) Evaluate the severity of the defect (remaining strength) and remediate the defect in accordance with §192.933;

(ii) As part of the operator's current integrity assessment either perform additional excavations in each covered segment within the ICDA region, or use an alternative assessment method allowed by this subpart to assess the line pipe in each covered segment within the ICDA region for internal corrosion; and

(iii) Evaluate the potential for internal corrosion in all pipeline segments (both covered and non-covered) in the operator's pipeline system with similar characteristics to the ICDA region containing the covered segment in which the corrosion was found, and as appropriate, remediate the conditions the operator finds in accordance with §192.933.

(4) *Post-assessment evaluation and monitoring*. An operator's plan must provide for evaluating the effectiveness of the ICDA process and continued monitoring of covered segments where internal corrosion has been identified. The evaluation and monitoring process includes—

(i) Evaluating the effectiveness of ICDA as an assessment method for addressing internal corrosion and determining whether a covered segment should be reassessed at more frequent intervals than those specified in §192.939. An operator must carry out this evaluation within a year of conducting an ICDA; and

(ii) Continually monitoring each covered segment where internal corrosion has been identified using techniques such as coupons, UT sensors or electronic probes, periodically drawing off liquids at low points and chemically analyzing the liquids for the presence of corrosion products. An operator must base the frequency of the monitoring and liquid analysis on results from all integrity assessments that have been conducted in accordance with the requirements of this subpart, and risk factors specific to the covered segment. If an operator finds any evidence of corrosion products in the covered segment, the operator must take prompt action in accordance with one of the two following required actions and remediate the conditions the operator finds in accordance with §192.933.

(A) Conduct excavations of covered segments at locations downstream from where the electrolyte might have entered the pipe; or

(B) Assess the covered segment using another integrity assessment method allowed by this subpart.

(5) *Other requirements*. The ICDA plan must also include—

(i) Criteria an operator will apply in making key decisions (*e.g.*, ICDA feasibility, definition of ICDA Regions, conditions requiring excavation) in implementing each stage of the ICDA process;

(ii) Provisions for applying more restrictive criteria when conducting ICDA for the first time on a covered segment and that become less stringent as the operator gains experience; and

(iii) Provisions that analysis be carried out on the entire pipeline in which covered segments are present, except that application of the remediation criteria of § 192.933 may be limited to covered segments.

[68 FR 69817, Dec. 15, 2003, as amended by Amdt. 192–95, 69 FR 18232, Apr. 6, 2004]

§ 192.929 What are the requirements for using Direct Assessment for Stress Corrosion Cracking (SCCDA)?

(a) *Definition*. Stress Corrosion Cracking Direct Assessment (SCCDA) is a process to assess a covered pipe segment for the presence of SCC primarily by systematically gathering and analyzing excavation data for pipe having similar operational characteristics and residing in a similar physical environment.

(b) *General requirements*. An operator using direct assessment as an integrity assessment method to address stress corrosion cracking in a covered pipeline segment must have a plan that provides, at minimum, for—

(1) *Data gathering and integration*. An operator's plan must provide for a systematic process to collect and evaluate data for all covered segments to identify whether the conditions for SCC are present and to prioritize the covered segments for assessment. This process must include gathering and evaluating data related to SCC at all sites an operator excavates during the conduct of its pipeline operations where the criteria in ASME/ANSI B31.8S (incorporated by reference, *see* § 192.7), appendix A3.3 indicate the potential for SCC. This data includes at minimum, the data specified in ASME/ANSI B31.8S, appendix A3.

(2) *Assessment method*. The plan must provide that if conditions for SCC are identified in a covered segment, an operator must assess the covered segment using an integrity assessment method specified in ASME/ANSI B31.8S, appendix A3, and remediate the threat in accordance with ASME/ANSI B31.8S, appendix A3, section A3.4.

[68 FR 69817, Dec. 15, 2003, as amended by Amdt. 192–95, 69 FR 18233, Apr. 6, 2004]

§ 192.931 How may Confirmatory Direct Assessment (CDA) be used?

An operator using the confirmatory direct assessment (CDA) method as allowed in § 192.937 must have a plan that meets the requirements of this section and of §§ 192.925 (ECDA) and § 192.927 (ICDA).

(a) *Threats*. An operator may only use CDA on a covered segment to identify damage resulting from external corrosion or internal corrosion.

(b) *External corrosion plan*. An operator's CDA plan for identifying external corrosion must comply with § 192.925 with the following exceptions.

(1) The procedures for indirect examination may allow use of only one indirect examination tool suitable for the application.

(2) The procedures for direct examination and remediation must provide that—

(i) All immediate action indications must be excavated for each ECDA region; and

(ii) At least one high risk indication that meets the criteria of scheduled action must be excavated in each ECDA region.

(c) *Internal corrosion plan*. An operator's CDA plan for identifying internal corrosion must comply with § 192.927 except that the plan's procedures for identifying locations for excavation may require excavation of only one high risk location in each ICDA region.

(d) *Defects requiring near-term remediation*. If an assessment carried out under paragraph (b) or (c) of this section reveals any defect requiring remediation prior to the next scheduled assessment, the operator must schedule the next assessment in accordance with NACE SP0502–2008 (incorporated by reference, *see* § 192.7), section 6.2 and 6.3. If the defect requires immediate remediation, then the operator must reduce pressure consistent with § 192.933 until

the operator has completed reassessment using one of the assessment techniques allowed in § 192.937.

[68 FR 69817, Dec. 15, 2003, as amended by Amdt. 192–114, 75 FR 48604, Aug. 11, 2010]

§ 192.933 What actions must be taken to address integrity issues?

(a) *General requirements.* An operator must take prompt action to address all anomalous conditions the operator discovers through the integrity assessment. In addressing all conditions, an operator must evaluate all anomalous conditions and remediate those that could reduce a pipeline's integrity. An operator must be able to demonstrate that the remediation of the condition will ensure the condition is unlikely to pose a threat to the integrity of the pipeline until the next reassessment of the covered segment.

(1) *Temporary pressure reduction.* If an operator is unable to respond within the time limits for certain conditions specified in this section, the operator must temporarily reduce the operating pressure of the pipeline or take other action that ensures the safety of the covered segment. An operator must determine any temporary reduction in operating pressure required by this section using ASME/ANSI B31G (incorporated by reference, *see* § 192.7) or AGA Pipeline Research Committee Project PR–3–805 (''RSTRENG,'' incorporated by reference, *see* § 192.7) or reduce the operating pressure to a level not exceeding 80 percent of the level at the time the condition was discovered. (See appendix A to this part for information on availability of incorporation by reference information.) An operator must notify PHMSA in accordance with § 192.949 if it cannot meet the schedule for evaluation and remediation required under paragraph (c) of this section and cannot provide safety through temporary reduction in operating pressure or other action. An operator must also notify a State pipeline safety authority when either a covered segment is located in a State where PHMSA has an interstate agent agreement, or an intrastate covered segment is regulated by that State.

(2) *Long-term pressure reduction.* When a pressure reduction exceeds 365 days, the operator must notify PHMSA under § 192.949 and explain the reasons for the remediation delay. This notice must include a technical justification that the continued pressure reduction will not jeopardize the integrity of the pipeline. The operator also must notify a State pipeline safety authority when either a covered segment is located in a State where PHMSA has an interstate agent agreement, or an intrastate covered segment is regulated by that State.

(b) *Discovery of condition.* Discovery of a condition occurs when an operator has adequate information about a condition to determine that the condition presents a potential threat to the integrity of the pipeline. A condition that presents a potential threat includes, but is not limited to, those conditions that require remediation or monitoring listed under paragraphs (d)(1) through (d)(3) of this section. An operator must promptly, but no later than 180 days after conducting an integrity assessment, obtain sufficient information about a condition to make that determination, unless the operator demonstrates that the 180-day period is impracticable.

(c) *Schedule for evaluation and remediation.* An operator must complete remediation of a condition according to a schedule prioritizing the conditions for evaluation and remediation. Unless a special requirement for remediating certain conditions applies, as provided in paragraph (d) of this section, an operator must follow the schedule in ASME/ANSI B31.8S (incorporated by reference, see § 192.7), section 7, Figure 4. If an operator cannot meet the schedule for any condition, the operator must explain the reasons why it cannot meet the schedule and how the changed schedule will not jeopardize public safety.

(d) *Special requirements for scheduling remediation*—(1) *Immediate repair conditions.* An operator's evaluation and remediation schedule must follow ASME/ANSI B31.8S, section 7 in providing for immediate repair conditions. To maintain safety, an operator must temporarily reduce operating pressure in accordance with paragraph (a) of this section or shut down the pipeline until the operator completes the repair of these conditions. An operator must treat the

following conditions as immediate repair conditions:

(i) A calculation of the remaining strength of the pipe shows a predicted failure pressure less than or equal to 1.1 times the maximum allowable operating pressure at the location of the anomaly. Suitable remaining strength calculation methods include, ASME/ANSI B31G; RSTRENG; or an alternative equivalent method of remaining strength calculation. These documents are incorporated by reference and available at the addresses listed in appendix A to part 192.

(ii) A dent that has any indication of metal loss, cracking or a stress riser.

(iii) An indication or anomaly that in the judgment of the person designated by the operator to evaluate the assessment results requires immediate action.

(2) *One-year conditions.* Except for conditions listed in paragraph (d)(1) and (d)(3) of this section, an operator must remediate any of the following within one year of discovery of the condition:

(i) A smooth dent located between the 8 o'clock and 4 o'clock positions (upper ⅔ of the pipe) with a depth greater than 6% of the pipeline diameter (greater than 0.50 inches in depth for a pipeline diameter less than Nominal Pipe Size (NPS) 12).

(ii) A dent with a depth greater than 2% of the pipeline's diameter (0.250 inches in depth for a pipeline diameter less than NPS 12) that affects pipe curvature at a girth weld or at a longitudinal seam weld.

(3) *Monitored conditions.* An operator does not have to schedule the following conditions for remediation, but must record and monitor the conditions during subsequent risk assessments and integrity assessments for any change that may require remediation:

(i) A dent with a depth greater than 6% of the pipeline diameter (greater than 0.50 inches in depth for a pipeline diameter less than NPS 12) located between the 4 o'clock position and the 8 o'clock position (bottom ⅓ of the pipe).

(ii) A dent located between the 8 o'clock and 4 o'clock positions (upper ⅔ of the pipe) with a depth greater than 6% of the pipeline diameter (greater than 0.50 inches in depth for a pipeline diameter less than Nominal Pipe Size (NPS) 12), and engineering analyses of the dent demonstrate critical strain levels are not exceeded.

(iii) A dent with a depth greater than 2% of the pipeline's diameter (0.250 inches in depth for a pipeline diameter less than NPS 12) that affects pipe curvature at a girth weld or a longitudinal seam weld, and engineering analyses of the dent and girth or seam weld demonstrate critical strain levels are not exceeded. These analyses must consider weld properties.

[68 FR 69817, Dec. 15, 2003, as amended by Amdt. 192–95, 69 FR 18233, Apr. 6, 2004; Amdt. 192–104, 72 FR 39016, July 17, 2007]

§ 192.935 What additional preventive and mitigative measures must an operator take?

(a) *General requirements.* An operator must take additional measures beyond those already required by Part 192 to prevent a pipeline failure and to mitigate the consequences of a pipeline failure in a high consequence area. An operator must base the additional measures on the threats the operator has identified to each pipeline segment. (*See* § 192.917) An operator must conduct, in accordance with one of the risk assessment approaches in ASME/ANSI B31.8S (incorporated by reference, *see* § 192.7), section 5, a risk analysis of its pipeline to identify additional measures to protect the high consequence area and enhance public safety. Such additional measures include, but are not limited to, installing Automatic Shut-off Valves or Remote Control Valves, installing computerized monitoring and leak detection systems, replacing pipe segments with pipe of heavier wall thickness, providing additional training to personnel on response procedures, conducting drills with local emergency responders and implementing additional inspection and maintenance programs.

(b) Third party damage and outside force damage—

(1) *Third party damage.* An operator must enhance its damage prevention program, as required under § 192.614 of this part, with respect to a covered segment to prevent and minimize the consequences of a release due to third party damage. Enhanced measures to

an existing damage prevention program include, at a minimum—

(i) Using qualified personnel (*see* §192.915) for work an operator is conducting that could adversely affect the integrity of a covered segment, such as marking, locating, and direct supervision of known excavation work.

(ii) Collecting in a central database information that is location specific on excavation damage that occurs in covered and non covered segments in the transmission system and the root cause analysis to support identification of targeted additional preventative and mitigative measures in the high consequence areas. This information must include recognized damage that is not required to be reported as an incident under part 191.

(iii) Participating in one-call systems in locations where covered segments are present.

(iv) Monitoring of excavations conducted on covered pipeline segments by pipeline personnel. If an operator finds physical evidence of encroachment involving excavation that the operator did not monitor near a covered segment, an operator must either excavate the area near the encroachment or conduct an above ground survey using methods defined in NACE SP0502–2008 (incorporated by reference, *see* §192.7). An operator must excavate, and remediate, in accordance with ANSI/ASME B31.8S and §192.933 any indication of coating holidays or discontinuity warranting direct examination.

(2) *Outside force damage*. If an operator determines that outside force (*e.g.*, earth movement, floods, unstable suspension bridge) is a threat to the integrity of a covered segment, the operator must take measures to minimize the consequences to the covered segment from outside force damage. These measures include, but are not limited to, increasing the frequency of aerial, foot or other methods of patrols, adding external protection, reducing external stress, and relocating the line.

(c) *Automatic shut-off valves (ASV) or Remote control valves (RCV)*. If an operator determines, based on a risk analysis, that an ASV or RCV would be an efficient means of adding protection to a high consequence area in the event of a gas release, an operator must install the ASV or RCV. In making that determination, an operator must, at least, consider the following factors—swiftness of leak detection and pipe shutdown capabilities, the type of gas being transported, operating pressure, the rate of potential release, pipeline profile, the potential for ignition, and location of nearest response personnel.

(d) *Pipelines operating below 30% SMYS*. An operator of a transmission pipeline operating below 30% SMYS located in a high consequence area must follow the requirements in paragraphs (d)(1) and (d)(2) of this section. An operator of a transmission pipeline operating below 30% SMYS located in a Class 3 or Class 4 area but not in a high consequence area must follow the requirements in paragraphs (d)(1), (d)(2) and (d)(3) of this section.

(1) Apply the requirements in paragraphs (b)(1)(i) and (b)(1)(iii) of this section to the pipeline; and

(2) Either monitor excavations near the pipeline, or conduct patrols as required by §192.705 of the pipeline at bimonthly intervals. If an operator finds any indication of unreported construction activity, the operator must conduct a follow up investigation to determine if mechanical damage has occurred.

(3) Perform semi-annual leak surveys (quarterly for unprotected pipelines or cathodically protected pipe where electrical surveys are impractical).

(e) *Plastic transmission pipeline*. An operator of a plastic transmission pipeline must apply the requirements in paragraphs (b)(1)(i), (b)(1)(iii) and (b)(1)(iv) of this section to the covered segments of the pipeline.

[68 FR 69817, Dec. 15, 2003, as amended by Amdt. 192–95, 69 FR 18233, Apr. 6, 2004; Amdt. 192–95, 69 FR 29904, May 26, 2004; Amdt. 192–114, 75 FR 48604, Aug. 11, 2010]

§192.937 What is a continual process of evaluation and assessment to maintain a pipeline's integrity?

(a) *General*. After completing the baseline integrity assessment of a covered segment, an operator must continue to assess the line pipe of that segment at the intervals specified in §192.939 and periodically evaluate the integrity of each covered pipeline segment as provided in paragraph (b) of

this section. An operator must reassess a covered segment on which a prior assessment is credited as a baseline under § 192.921(e) by no later than December 17, 2009. An operator must reassess a covered segment on which a baseline assessment is conducted during the baseline period specified in § 192.921(d) by no later than seven years after the baseline assessment of that covered segment unless the evaluation under paragraph (b) of this section indicates earlier reassessment.

(b) *Evaluation*. An operator must conduct a periodic evaluation as frequently as needed to assure the integrity of each covered segment. The periodic evaluation must be based on a data integration and risk assessment of the entire pipeline as specified in § 192.917. For plastic transmission pipelines, the periodic evaluation is based on the threat analysis specified in 192.917(d). For all other transmission pipelines, the evaluation must consider the past and present integrity assessment results, data integration and risk assessment information (§ 192.917), and decisions about remediation (§ 192.933) and additional preventive and mitigative actions (§ 192.935). An operator must use the results from this evaluation to identify the threats specific to each covered segment and the risk represented by these threats.

(c) *Assessment methods*. In conducting the integrity reassessment, an operator must assess the integrity of the line pipe in the covered segment by any of the following methods as appropriate for the threats to which the covered segment is susceptible (*see* § 192.917), or by confirmatory direct assessment under the conditions specified in § 192.931.

(1) Internal inspection tool or tools capable of detecting corrosion, and any other threats to which the covered segment is susceptible. An operator must follow ASME/ANSI B31.8S (incorporated by reference, *see* § 192.7), section 6.2 in selecting the appropriate internal inspection tools for the covered segment.

(2) Pressure test conducted in accordance with subpart J of this part. An operator must use the test pressures specified in Table 3 of section 5 of ASME/ANSI B31.8S, to justify an extended reassessment interval in accordance with § 192.939.

(3) Direct assessment to address threats of external corrosion, internal corrosion, or stress corrosion cracking. An operator must conduct the direct assessment in accordance with the requirements listed in § 192.923 and with as applicable, the requirements specified in §§ 192.925, 192.927 or 192.929;

(4) Other technology that an operator demonstrates can provide an equivalent understanding of the condition of the line pipe. An operator choosing this option must notify the Office of Pipeline Safety (OPS) 180 days before conducting the assessment, in accordance with § 192.949. An operator must also notify a State or local pipeline safety authority when either a covered segment is located in a State where OPS has an interstate agent agreement, or an intrastate covered segment is regulated by that State.

(5) Confirmatory direct assessment when used on a covered segment that is scheduled for reassessment at a period longer than seven years. An operator using this reassessment method must comply with § 192.931.

[68 FR 69817, Dec. 15, 2003, as amended by Amdt. 192–95, 69 FR 18234, Apr. 6, 2004]

§ 192.939 What are the required reassessment intervals?

An operator must comply with the following requirements in establishing the reassessment interval for the operator's covered pipeline segments.

(a) *Pipelines operating at or above 30% SMYS*. An operator must establish a reassessment interval for each covered segment operating at or above 30% SMYS in accordance with the requirements of this section. The maximum reassessment interval by an allowable reassessment method is seven years. If an operator establishes a reassessment interval that is greater than seven years, the operator must, within the seven-year period, conduct a confirmatory direct assessment on the covered segment, and then conduct the follow-up reassessment at the interval the operator has established. A reassessment carried out using confirmatory direct assessment must be done in accordance with § 192.931. The table that follows

this section sets forth the maximum allowed reassessment intervals.

(1) *Pressure test or internal inspection or other equivalent technology*. An operator that uses pressure testing or internal inspection as an assessment method must establish the reassessment interval for a covered pipeline segment by—

(i) Basing the interval on the identified threats for the covered segment (see § 192.917) and on the analysis of the results from the last integrity assessment and from the data integration and risk assessment required by § 192.917; or

(ii) Using the intervals specified for different stress levels of pipeline (operating at or above 30% SMYS) listed in ASME/ANSI B31.8S, section 5, Table 3.

(2) *External Corrosion Direct Assessment*. An operator that uses ECDA that meets the requirements of this subpart must determine the reassessment interval according to the requirements in paragraphs 6.2 and 6.3 of NACE SP0502–2008 (incorporated by reference, *see* § 192.7).

(3) *Internal Corrosion or SCC Direct Assessment*. An operator that uses ICDA or SCCDA in accordance with the requirements of this subpart must determine the reassessment interval according to the following method. However, the reassessment interval cannot exceed those specified for direct assessment in ASME/ANSI B31.8S, section 5, Table 3.

(i) Determine the largest defect most likely to remain in the covered segment and the corrosion rate appropriate for the pipe, soil and protection conditions;

(ii) Use the largest remaining defect as the size of the largest defect discovered in the SCC or ICDA segment; and

(iii) Estimate the reassessment interval as half the time required for the largest defect to grow to a critical size.

(b) *Pipelines Operating Below 30% SMYS*. An operator must establish a reassessment interval for each covered segment operating below 30% SMYS in accordance with the requirements of this section. The maximum reassessment interval by an allowable reassessment method is seven years. An operator must establish reassessment by at least one of the following—

(1) Reassessment by pressure test, internal inspection or other equivalent technology following the requirements in paragraph (a)(1) of this section except that the stress level referenced in paragraph (a)(1)(ii) of this section would be adjusted to reflect the lower operating stress level. If an established interval is more than seven years, the operator must conduct by the seventh year of the interval either a confirmatory direct assessment in accordance with § 192.931, or a low stress reassessment in accordance with § 192.941.

(2) Reassessment by ECDA following the requirements in paragraph (a)(2) of this section.

(3) Reassessment by ICDA or SCCDA following the requirements in paragraph (a)(3) of this section.

(4) Reassessment by confirmatory direct assessment at 7-year intervals in accordance with § 192.931, with reassessment by one of the methods listed in paragraphs (b)(1) through (b)(3) of this section by year 20 of the interval.

(5) Reassessment by the low stress assessment method at 7-year intervals in accordance with § 192.941 with reassessment by one of the methods listed in paragraphs (b)(1) through (b)(3) of this section by year 20 of the interval.

(6) The following table sets forth the maximum reassessment intervals. Also refer to Appendix E.II for guidance on Assessment Methods and Assessment Schedule for Transmission Pipelines Operating Below 30% SMYS. In case of conflict between the rule and the guidance in the Appendix, the requirements of the rule control. An operator must comply with the following requirements in establishing a reassessment interval for a covered segment:

MAXIMUM REASSESSMENT INTERVAL

Assessment method	Pipeline operating at or above 50% SMYS	Pipeline operating at or above 30% SMYS, up to 50% SMYS	Pipeline operating below 30% SMYS
Internal Inspection Tool, Pressure Test or Direct Assessment.	10 years (*)	15 years (*)	20 years. (**)

MAXIMUM REASSESSMENT INTERVAL—Continued

Assessment method	Pipeline operating at or above 50% SMYS	Pipeline operating at or above 30% SMYS, up to 50% SMYS	Pipeline operating below 30% SMYS
Confirmatory Direct Assessment.	7 years	7 years	7 years.
Low Stress Reassessment	Not applicable	Not applicable	7 years + ongoing actions specified in § 192.941.

(*) A Confirmatory direct assessment as described in § 192.931 must be conducted by year 7 in a 10-year interval and years 7 and 14 of a 15-year interval.
(**) A low stress reassessment or Confirmatory direct assessment must be conducted by years 7 and 14 of the interval.

[68 FR 69817, Dec. 15, 2003, as amended by Amdt. 192–95, 69 FR 18234, Apr. 6, 2004; 192–114, 75 FR 48604, Aug. 11, 2010]

§ 192.941 What is a low stress reassessment?

(a) *General*. An operator of a transmission line that operates below 30% SMYS may use the following method to reassess a covered segment in accordance with § 192.939. This method of reassessment addresses the threats of external and internal corrosion. The operator must have conducted a baseline assessment of the covered segment in accordance with the requirements of §§ 192.919 and 192.921.

(b) *External corrosion*. An operator must take one of the following actions to address external corrosion on the low stress covered segment.

(1) *Cathodically protected pipe*. To address the threat of external corrosion on cathodically protected pipe in a covered segment, an operator must perform an electrical survey (*i.e.* indirect examination tool/method) at least every 7 years on the covered segment. An operator must use the results of each survey as part of an overall evaluation of the cathodic protection and corrosion threat for the covered segment. This evaluation must consider, at minimum, the leak repair and inspection records, corrosion monitoring records, exposed pipe inspection records, and the pipeline environment.

(2) *Unprotected pipe or cathodically protected pipe where electrical surveys are impractical*. If an electrical survey is impractical on the covered segment an operator must—

(i) Conduct leakage surveys as required by § 192.706 at 4-month intervals; and

(ii) Every 18 months, identify and remediate areas of active corrosion by evaluating leak repair and inspection records, corrosion monitoring records, exposed pipe inspection records, and the pipeline environment.

(c) *Internal corrosion*. To address the threat of internal corrosion on a covered segment, an operator must—

(1) Conduct a gas analysis for corrosive agents at least once each calendar year;

(2) Conduct periodic testing of fluids removed from the segment. At least once each calendar year test the fluids removed from each storage field that may affect a covered segment; and

(3) At least every seven (7) years, integrate data from the analysis and testing required by paragraphs (c)(1)–(c)(2) with applicable internal corrosion leak records, incident reports, safety-related condition reports, repair records, patrol records, exposed pipe reports, and test records, and define and implement appropriate remediation actions.

[68 FR 69817, Dec. 15, 2003, as amended by Amdt. 192–95, 69 FR 18234, Apr. 6, 2004]

§ 192.943 When can an operator deviate from these reassessment intervals?

(a) *Waiver from reassessment interval in limited situations*. In the following limited instances, OPS may allow a waiver from a reassessment interval required by § 192.939 if OPS finds a waiver would not be inconsistent with pipeline safety.

(1) *Lack of internal inspection tools*. An operator who uses internal inspection as an assessment method may be able to justify a longer reassessment period for a covered segment if internal inspection tools are not available to assess the line pipe. To justify this, the operator must demonstrate that it cannot obtain the internal inspection tools

within the required reassessment period and that the actions the operator is taking in the interim ensure the integrity of the covered segment.

(2) *Maintain product supply*. An operator may be able to justify a longer reassessment period for a covered segment if the operator demonstrates that it cannot maintain local product supply if it conducts the reassessment within the required interval.

(b) *How to apply*. If one of the conditions specified in paragraph (a) (1) or (a) (2) of this section applies, an operator may seek a waiver of the required reassessment interval. An operator must apply for a waiver in accordance with 49 U.S.C. 60118(c), at least 180 days before the end of the required reassessment interval, unless local product supply issues make the period impractical. If local product supply issues make the period impractical, an operator must apply for the waiver as soon as the need for the waiver becomes known.

[68 FR 69817, Dec. 15, 2003, as amended by Amdt. 192–95, 69 FR 18234, Apr. 6, 2004]

§ 192.945 What methods must an operator use to measure program effectiveness?

(a) *General*. An operator must include in its integrity management program methods to measure whether the program is effective in assessing and evaluating the integrity of each covered pipeline segment and in protecting the high consequence areas. These measures must include the four overall performance measures specified in ASME/ANSI B31.8S (incorporated by reference, *see* § 192.7 of this part), section 9.4, and the specific measures for each identified threat specified in ASME/ANSI B31.8S, Appendix A. An operator must submit the four overall performance measures as part of the annual report required by § 191.17 of this subchapter.

(b) *External Corrosion Direct assessment*. In addition to the general requirements for performance measures in paragraph (a) of this section, an operator using direct assessment to assess the external corrosion threat must define and monitor measures to determine the effectiveness of the ECDA process. These measures must meet the requirements of § 192.925.

[68 FR 69817, Dec. 15, 2003, as amended by Amdt. 192–95, 69 FR 18234, Apr. 6, 2004; 75 FR 72906, Nov. 26, 2010]

§ 192.947 What records must an operator keep?

An operator must maintain, for the useful life of the pipeline, records that demonstrate compliance with the requirements of this subpart. At minimum, an operator must maintain the following records for review during an inspection.

(a) A written integrity management program in accordance with § 192.907;

(b) Documents supporting the threat identification and risk assessment in accordance with § 192.917;

(c) A written baseline assessment plan in accordance with § 192.919;

(d) Documents to support any decision, analysis and process developed and used to implement and evaluate each element of the baseline assessment plan and integrity management program. Documents include those developed and used in support of any identification, calculation, amendment, modification, justification, deviation and determination made, and any action taken to implement and evaluate any of the program elements;

(e) Documents that demonstrate personnel have the required training, including a description of the training program, in accordance with § 192.915;

(f) Schedule required by § 192.933 that prioritizes the conditions found during an assessment for evaluation and remediation, including technical justifications for the schedule.

(g) Documents to carry out the requirements in §§ 192.923 through 192.929 for a direct assessment plan;

(h) Documents to carry out the requirements in § 192.931 for confirmatory direct assessment;

(i) Verification that an operator has provided any documentation or notification required by this subpart to be provided to OPS, and when applicable, a State authority with which OPS has an interstate agent agreement, and a State or local pipeline safety authority

that regulates a covered pipeline segment within that State.

[68 FR 69817, Dec. 15, 2003, as amended by Amdt. 192–95, 69 FR 18234, Apr. 6, 2004]

§ 192.949 How does an operator notify PHMSA?

An operator must provide any notification required by this subpart by—

(a) Sending the notification to the Office of Pipeline Safety, Pipeline and Hazardous Materials Safety Administration, U.S. Department of Transportation, Information Resources Manager, PHP–10, 1200 New Jersey Avenue, SE., Washington, DC 20590-0001;

(b) Sending the notification to the Information Resources Manager by facsimile to (202) 366–7128; or

(c) Entering the information directly on the Integrity Management Database (IMDB) Web site at *http://primis.rspa.dot.gov/gasimp/*.

[68 FR 69817, Dec. 15, 2003, as amended at 70 FR 11139, Mar. 8, 2005; Amdt. 192–103, 72 FR 4657, Feb. 1, 2007; 73 FR 16570, Mar. 28, 2008; 74 FR 2894, Jan. 16, 2009]

§ 192.951 Where does an operator file a report?

An operator must file any report required by this subpart electronically to the Pipeline and Hazardous Materials Safety Administration in accordance with § 191.7 of this subchapter.

[Amdt. No. 192–115, 75 FR 72906, Nov. 26, 2010]

Subpart P—Gas Distribution Pipeline Integrity Management (IM)

SOURCE: 74 FR 63934, Dec. 4, 2009, unless otherwise noted.

§ 192.1001 What definitions apply to this subpart?

The following definitions apply to this subpart:

Excavation Damage means any impact that results in the need to repair or replace an underground facility due to a weakening, or the partial or complete destruction, of the facility, including, but not limited to, the protective coating, lateral support, cathodic protection or the housing for the line device or facility.

Hazardous Leak means a leak that represents an existing or probable hazard to persons or property and requires immediate repair or continuous action until the conditions are no longer hazardous.

Integrity Management Plan or *IM Plan* means a written explanation of the mechanisms or procedures the operator will use to implement its integrity management program and to ensure compliance with this subpart.

Integrity Management Program or *IM Program* means an overall approach by an operator to ensure the integrity of its gas distribution system.

Mechanical fitting means a mechanical device used to connect sections of pipe. The term ''Mechanical fitting'' applies only to:

(1) Stab Type fittings;

(2) Nut Follower Type fittings;

(3) Bolted Type fittings; or

(4) Other Compression Type fittings.

Small LPG Operator means an operator of a liquefied petroleum gas (LPG) distribution pipeline that serves fewer than 100 customers from a single source.

[74 FR 63934, Dec. 4, 2009, as amended at 76 FR 5499, Feb. 1, 2011]

§ 192.1003 What do the regulations in this subpart cover?

General. This subpart prescribes minimum requirements for an IM program for any gas distribution pipeline covered under this part, including liquefied petroleum gas systems. A gas distribution operator, other than a master meter operator or a small LPG operator, must follow the requirements in §§ 192.1005–192.1013 of this subpart. A master meter operator or small LPG operator of a gas distribution pipeline must follow the requirements in § 192.1015 of this subpart.

§ 192.1005 What must a gas distribution operator (other than a master meter or small LPG operator) do to implement this subpart?

No later than August 2, 2011 a gas distribution operator must develop and implement an integrity management program that includes a written integrity management plan as specified in § 192.1007.

§ 192.1007 What are the required elements of an integrity management plan?

A written integrity management plan must contain procedures for developing and implementing the following elements:

(a) *Knowledge.* An operator must demonstrate an understanding of its gas distribution system developed from reasonably available information.

(1) Identify the characteristics of the pipeline's design and operations and the environmental factors that are necessary to assess the applicable threats and risks to its gas distribution pipeline.

(2) Consider the information gained from past design, operations, and maintenance.

(3) Identify additional information needed and provide a plan for gaining that information over time through normal activities conducted on the pipeline (for example, design, construction, operations or maintenance activities).

(4) Develop and implement a process by which the IM program will be reviewed periodically and refined and improved as needed.

(5) Provide for the capture and retention of data on any new pipeline installed. The data must include, at a minimum, the location where the new pipeline is installed and the material of which it is constructed.

(b) *Identify threats.* The operator must consider the following categories of threats to each gas distribution pipeline: corrosion, natural forces, excavation damage, other outside force damage, material or welds, equipment failure, incorrect operations, and other concerns that could threaten the integrity of its pipeline. An operator must consider reasonably available information to identify existing and potential threats. Sources of data may include, but are not limited to, incident and leak history, corrosion control records, continuing surveillance records, patrolling records, maintenance history, and excavation damage experience.

(c) *Evaluate and rank risk.* An operator must evaluate the risks associated with its distribution pipeline. In this evaluation, the operator must determine the relative importance of each threat and estimate and rank the risks posed to its pipeline. This evaluation must consider each applicable current and potential threat, the likelihood of failure associated with each threat, and the potential consequences of such a failure. An operator may subdivide its pipeline into regions with similar characteristics (e.g., contiguous areas within a distribution pipeline consisting of mains, services and other appurtenances; areas with common materials or environmental factors), and for which similar actions likely would be effective in reducing risk.

(d) *Identify and implement measures to address risks.* Determine and implement measures designed to reduce the risks from failure of its gas distribution pipeline. These measures must include an effective leak management program (unless all leaks are repaired when found).

(e) *Measure performance, monitor results, and evaluate effectiveness.*

(1) Develop and monitor performance measures from an established baseline to evaluate the effectiveness of its IM program. An operator must consider the results of its performance monitoring in periodically re-evaluating the threats and risks. These performance measures must include the following:

(i) Number of hazardous leaks either eliminated or repaired as required by § 192.703(c) of this subchapter (or total number of leaks if all leaks are repaired when found), categorized by cause;

(ii) Number of excavation damages;

(iii) Number of excavation tickets (receipt of information by the underground facility operator from the notification center);

(iv) Total number of leaks either eliminated or repaired, categorized by cause;

(v) Number of hazardous leaks either eliminated or repaired as required by § 192.703(c) (or total number of leaks if all leaks are repaired when found), categorized by material; and

(vi) Any additional measures the operator determines are needed to evaluate the effectiveness of the operator's IM program in controlling each identified threat.

(f) *Periodic Evaluation and Improvement.* An operator must re-evaluate

threats and risks on its entire pipeline and consider the relevance of threats in one location to other areas. Each operator must determine the appropriate period for conducting complete program evaluations based on the complexity of its system and changes in factors affecting the risk of failure. An operator must conduct a complete program re-evaluation at least every five years. The operator must consider the results of the performance monitoring in these evaluations.

(g) *Report results.* Report, on an annual basis, the four measures listed in paragraphs (e)(1)(i) through (e)(1)(iv) of this section, as part of the annual report required by § 191.11. An operator also must report the four measures to the state pipeline safety authority if a state exercises jurisdiction over the operator's pipeline.

[74 FR 63934, Dec. 4, 2009, as amended at 76 FR 5499, Feb. 1, 2011]

§ 192.1009 What must an operator report when a mechanical fitting fails?

(a) Except as provided in paragraph (b) of this section, each operator of a distribution pipeline system must submit a report on each mechanical fitting failure, excluding any failure that results only in a nonhazardous leak, on a Department of Transportation Form PHMSA F–7100.1–2. The report(s) must be submitted in accordance with § 191.12.

(b) The mechanical fitting failure reporting requirements in paragraph (a) of this section do not apply to the following:

(1) Master meter operators;

(2) Small LPG operator as defined in § 192.1001; or

(3) LNG facilities.

[76 FR 5499, Feb. 1, 2011]

§ 192.1011 What records must an operator keep?

An operator must maintain records demonstrating compliance with the requirements of this subpart for at least 10 years. The records must include copies of superseded integrity management plans developed under this subpart.

§ 192.1013 When may an operator deviate from required periodic inspections under this part?

(a) An operator may propose to reduce the frequency of periodic inspections and tests required in this part on the basis of the engineering analysis and risk assessment required by this subpart.

(b) An operator must submit its proposal to the PHMSA Associate Administrator for Pipeline Safety or, in the case of an intrastate pipeline facility regulated by the State, the appropriate State agency. The applicable oversight agency may accept the proposal on its own authority, with or without conditions and limitations, on a showing that the operator's proposal, which includes the adjusted interval, will provide an equal or greater overall level of safety.

(c) An operator may implement an approved reduction in the frequency of a periodic inspection or test only where the operator has developed and implemented an integrity management program that provides an equal or improved overall level of safety despite the reduced frequency of periodic inspections.

§ 192.1015 What must a master meter or small liquefied petroleum gas (LPG) operator do to implement this subpart?

(a) *General.* No later than August 2, 2011 the operator of a master meter system or a small LPG operator must develop and implement an IM program that includes a written IM plan as specified in paragraph (b) of this section. The IM program for these pipelines should reflect the relative simplicity of these types of pipelines.

(b) *Elements.* A written integrity management plan must address, at a minimum, the following elements:

(1) *Knowledge.* The operator must demonstrate knowledge of its pipeline, which, to the extent known, should include the approximate location and material of its pipeline. The operator must identify additional information needed and provide a plan for gaining knowledge over time through normal activities conducted on the pipeline (for example, design, construction, operations or maintenance activities).

(2) *Identify threats*. The operator must consider, at minimum, the following categories of threats (existing and potential): Corrosion, natural forces, excavation damage, other outside force damage, material or weld failure, equipment failure, and incorrect operation.

(3) *Rank risks*. The operator must evaluate the risks to its pipeline and estimate the relative importance of each identified threat.

(4) *Identify and implement measures to mitigate risks*. The operator must determine and implement measures designed to reduce the risks from failure of its pipeline.

(5) *Measure performance, monitor results, and evaluate effectiveness*. The operator must monitor, as a performance measure, the number of leaks eliminated or repaired on its pipeline and their causes.

(6) *Periodic evaluation and improvement*. The operator must determine the appropriate period for conducting IM program evaluations based on the complexity of its pipeline and changes in factors affecting the risk of failure. An operator must re-evaluate its entire program at least every five years. The operator must consider the results of the performance monitoring in these evaluations.

(c) *Records*. The operator must maintain, for a period of at least 10 years, the following records:

(1) A written IM plan in accordance with this section, including superseded IM plans;

(2) Documents supporting threat identification; and

(3) Documents showing the location and material of all piping and appurtenances that are installed after the effective date of the operator's IM program and, to the extent known, the location and material of all pipe and appurtenances that were existing on the effective date of the operator's program.

APPENDIX A TO PART 192 [RESERVED]

APPENDIX B TO PART 192—QUALIFICATION OF PIPE

I. Listed Pipe Specifications

API 5L—Steel pipe, ''API Specification for Line Pipe'' (incorporated by reference, *see* §192.7).

ASTM A53/A53M—Steel pipe, ''Standard Specification for Pipe, Steel Black and Hot-Dipped, Zinc-Coated, Welded and Seamless'' (incorporated by reference, *see* §192.7).

ASTM A106—Steel pipe, ''Standard Specification for Seamless Carbon Steel Pipe for High Temperature Service'' (incorporated by reference, *see* §192.7).

ASTM A333/A333M—Steel pipe, ''Standard Specification for Seamless and Welded Steel Pipe for Low Temperature Service'' (incorporated by reference, *see* §192.7).

ASTM A381—Steel pipe, ''Standard Specification for Metal-Arc-Welded Steel Pipe for Use with High-Pressure Transmission Systems'' (incorporated by reference, *see* §192.7).

ASTM A671—Steel pipe, ''Standard Specification for Electric-Fusion-Welded Pipe for Atmospheric and Lower Temperatures'' (incorporated by reference, *see* §192.7).

ASTM A672—Steel pipe, ''Standard Specification for Electric-Fusion-Welded Steel Pipe for High-Pressure Service at Moderate Temperatures'' (incorporated by reference, *see* §192.7).

ASTM A691—Steel pipe, ''Standard Specification for Carbon and Alloy Steel Pipe, Electric-Fusion-Welded for High Pressure Service at High Temperatures'' (incorporated by reference, *see* §192.7).

ASTM D2513–99—Thermoplastic pipe and tubing, ''Standard Specification for Thermoplastic Gas Pressure Pipe, Tubing, and Fittings'' (incorporated by reference, *see* §192.7).

ASTM D2517—Thermosetting plastic pipe and tubing, ''Standard Specification for Reinforced Epoxy Resin Gas Pressure Pipe and Fittings'' (incorporated by reference, *see* §192.7).

II. *Steel pipe of unknown or unlisted specification*.

A. *Bending Properties*. For pipe 2 inches (51 millimeters) or less in diameter, a length of pipe must be cold bent through at least 90 degrees around a cylindrical mandrel that has a diameter 12 times the diameter of the pipe, without developing cracks at any portion and without opening the longitudinal weld.

For pipe more than 2 inches (51 millimeters) in diameter, the pipe must meet the requirements of the flattening tests set forth in ASTM A53 (incorporated by reference, *see* §192.7), except that the number of tests must be at least equal to the minimum required in paragraph II-D of this appendix to determine yield strength.

B. *Weldability*. A girth weld must be made in the pipe by a welder who is qualified under subpart E of this part. The weld must be made under the most severe conditions under which welding will be allowed in the field and by means of the same procedure that will be used in the field. On pipe more than

4 inches (102 millimeters) in diameter, at least one test weld must be made for each 100 lengths of pipe. On pipe 4 inches (102 millimeters) or less in diameter, at least one test weld must be made for each 400 lengths of pipe. The weld must be tested in accordance with API Standard 1104 (incorporated by reference, *see* § 192.7). If the requirements of API Standard 1104 cannot be met, weldability may be established by making chemical tests for carbon and manganese, and proceeding in accordance with section IX of the ASME Boiler and Pressure Vessel Code (ibr, *see* 192.7). The same number of chemical tests must be made as are required for testing a girth weld.

C. *Inspection*. The pipe must be clean enough to permit adequate inspection. It must be visually inspected to ensure that it is reasonably round and straight and there are no defects which might impair the strength or tightness of the pipe.

D. *Tensile Properties*. If the tensile properties of the pipe are not known, the minimum yield strength may be taken as 24,000 p.s.i. (165 MPa) or less, or the tensile properties may be established by performing tensile tests as set forth in API Specification 5L (incorporated by reference, *see* § 192.7). All test specimens shall be selected at random and the following number of tests must be performed:

NUMBER OF TENSILE TESTS—ALL SIZES

10 lengths or less	1 set of tests for each length.
11 to 100 lengths	1 set of tests for each 5 lengths, but not less than 10 tests.
Over 100 lengths	1 set of tests for each 10 lengths, but not less than 20 tests.

If the yield-tensile ratio, based on the properties determined by those tests, exceeds 0.85, the pipe may be used only as provided in § 192.55(c).

III. *Steel pipe manufactured before November 12, 1970, to earlier editions of listed specifications*. Steel pipe manufactured before November 12, 1970, in accordance with a specification of which a later edition is listed in section I of this appendix, is qualified for use under this part if the following requirements are met:

A. *Inspection*. The pipe must be clean enough to permit adequate inspection. It must be visually inspected to ensure that it is reasonably round and straight and that there are no defects which might impair the strength or tightness of the pipe.

B. *Similarity of specification requirements*. The edition of the listed specification under which the pipe was manufactured must have substantially the same requirements with respect to the following properties as a later edition of that specification listed in section I of this appendix:

(1) Physical (mechanical) properties of pipe, including yield and tensile strength, elongation, and yield to tensile ratio, and testing requirements to verify those properties.

(2) Chemical properties of pipe and testing requirements to verify those properties.

C. *Inspection or test of welded pipe*. On pipe with welded seams, one of the following requirements must be met:

(1) The edition of the listed specification to which the pipe was manufactured must have substantially the same requirements with respect to nondestructive inspection of welded seams and the standards for acceptance or rejection and repair as a later edition of the specification listed in section I of this appendix.

(2) The pipe must be tested in accordance with subpart J of this part to at least 1.25 times the maximum allowable operating pressure if it is to be installed in a class 1 location and to at least 1.5 times the maximum allowable operating pressure if it is to be installed in a class 2, 3, or 4 location. Notwithstanding any shorter time period permitted under subpart J of this part, the test pressure must be maintained for at least 8 hours.

[35 FR 13257, Aug. 19, 1970]

EDITORIAL NOTE: For FEDERAL REGISTER citations affecting appendix B to part 192, see the List of CFR Sections Affected, which appears in the Finding Aids section of the printed volume and at *www.fdsys.gov*.

APPENDIX C TO PART 192—QUALIFICATION OF WELDERS FOR LOW STRESS LEVEL PIPE

I. *Basic test*. The test is made on pipe 12 inches (305 millimeters) or less in diameter. The test weld must be made with the pipe in a horizontal fixed position so that the test weld includes at least one section of overhead position welding. The beveling, root opening, and other details must conform to the specifications of the procedure under which the welder is being qualified. Upon completion, the test weld is cut into four coupons and subjected to a root bend test. If, as a result of this test, two or more of the four coupons develop a crack in the weld material, or between the weld material and base metal, that is more than ⅛-inch (3.2 millimeters) long in any direction, the weld is unacceptable. Cracks that occur on the corner of the specimen during testing are not considered. A welder who successfully passes a butt-weld qualification test under this section shall be qualified to weld on all pipe diameters less than or equal to 12 inches.

II. *Additional tests for welders of service line connections to mains*. A service line connection fitting is welded to a pipe section with the same diameter as a typical main. The

weld is made in the same position as it is made in the field. The weld is unacceptable if it shows a serious undercutting or if it has rolled edges. The weld is tested by attempting to break the fitting off the run pipe. The weld is unacceptable if it breaks and shows incomplete fusion, overlap, or poor penetration at the junction of the fitting and run pipe.

III. *Periodic tests for welders of small service lines.* Two samples of the welder's work, each about 8 inches (203 millimeters) long with the weld located approximately in the center, are cut from steel service line and tested as follows:

(1) One sample is centered in a guided bend testing machine and bent to the contour of the die for a distance of 2 inches (51 millimeters) on each side of the weld. If the sample shows any breaks or cracks after removal from the bending machine, it is unacceptable.

(2) The ends of the second sample are flattened and the entire joint subjected to a tensile strength test. If failure occurs adjacent to or in the weld metal, the weld is unacceptable. If a tensile strength testing machine is not available, this sample must also pass the bending test prescribed in subparagraph (1) of this paragraph.

[35 FR 13257, Aug. 19, 1970, as amended by Amdt. 192–85, 63 FR 37504, July 13, 1998; Amdt. 192–94, 69 FR 32896, June 14, 2004]

APPENDIX D TO PART 192—CRITERIA FOR CATHODIC PROTECTION AND DETERMINATION OF MEASUREMENTS

I. *Criteria for cathodic protection*— A. *Steel, cast iron, and ductile iron structures.* (1) A negative (cathodic) voltage of at least 0.85 volt, with reference to a saturated copper-copper sulfate half cell. Determination of this voltage must be made with the protective current applied, and in accordance with sections II and IV of this appendix.

(2) A negative (cathodic) voltage shift of at least 300 millivolts. Determination of this voltage shift must be made with the protective current applied, and in accordance with sections II and IV of this appendix. This criterion of voltage shift applies to structures not in contact with metals of different anodic potentials.

(3) A minimum negative (cathodic) polarization voltage shift of 100 millivolts. This polarization voltage shift must be determined in accordance with sections III and IV of this appendix.

(4) A voltage at least as negative (cathodic) as that originally established at the beginning of the Tafel segment of the E-log-I curve. This voltage must be measured in accordance with section IV of this appendix.

(5) A net protective current from the electrolyte into the structure surface as measured by an earth current technique applied at predetermined current discharge (anodic) points of the structure.

B. *Aluminum structures.* (1) Except as provided in paragraphs (3) and (4) of this paragraph, a minimum negative (cathodic) voltage shift of 150 millivolts, produced by the application of protective current. The voltage shift must be determined in accordance with sections II and IV of this appendix.

(2) Except as provided in paragraphs (3) and (4) of this paragraph, a minimum negative (cathodic) polarization voltage shift of 100 millivolts. This polarization voltage shift must be determined in accordance with sections III and IV of this appendix.

(3) Notwithstanding the alternative minimum criteria in paragraphs (1) and (2) of this paragraph, aluminum, if cathodically protected at voltages in excess of 1.20 volts as measured with reference to a copper-copper sulfate half cell, in accordance with section IV of this appendix, and compensated for the voltage (IR) drops other than those across the structure-electrolyte boundary may suffer corrosion resulting from the build-up of alkali on the metal surface. A voltage in excess of 1.20 volts may not be used unless previous test results indicate no appreciable corrosion will occur in the particular environment.

(4) Since aluminum may suffer from corrosion under high pH conditions, and since application of cathodic protection tends to increase the pH at the metal surface, careful investigation or testing must be made before applying cathodic protection to stop pitting attack on aluminum structures in environments with a natural pH in excess of 8.

C. *Copper structures.* A minimum negative (cathodic) polarization voltage shift of 100 millivolts. This polarization voltage shift must be determined in accordance with sections III and IV of this appendix.

D. *Metals of different anodic potentials.* A negative (cathodic) voltage, measured in accordance with section IV of this appendix, equal to that required for the most anodic metal in the system must be maintained. If amphoteric structures are involved that could be damaged by high alkalinity covered by paragraphs (3) and (4) of paragraph B of this section, they must be electrically isolated with insulating flanges, or the equivalent.

II. *Interpretation of voltage measurement.* Voltage (IR) drops other than those across the structure-electrolyte boundary must be considered for valid interpretation of the voltage measurement in paragraphs A(1) and (2) and paragraph B(1) of section I of this appendix.

III. *Determination of polarization voltage shift.* The polarization voltage shift must be determined by interrupting the protective current and measuring the polarization

decay. When the current is initially interrupted, an immediate voltage shift occurs. The voltage reading after the immediate shift must be used as the base reading from which to measure polarization decay in paragraphs A(3), B(2), and C of section I of this appendix.

IV. *Reference half cells.* A. Except as provided in paragraphs B and C of this section, negative (cathodic) voltage must be measured between the structure surface and a saturated copper-copper sulfate half cell contacting the electrolyte.

B. Other standard reference half cells may be substituted for the saturated cooper-copper sulfate half cell. Two commonly used reference half cells are listed below along with their voltage equivalent to −0.85 volt as referred to a saturated copper-copper sulfate half cell:

(1) Saturated KCl calomel half cell: −0.78 volt.

(2) Silver-silver chloride half cell used in sea water: −0.80 volt.

C. In addition to the standard reference half cells, an alternate metallic material or structure may be used in place of the saturated copper-copper sulfate half cell if its potential stability is assured and if its voltage equivalent referred to a saturated copper-copper sulfate half cell is established.

[Amdt. 192–4, 36 FR 12305, June 30, 1971]

APPENDIX E TO PART 192—GUIDANCE ON DETERMINING HIGH CONSEQUENCE AREAS AND ON CARRYING OUT REQUIREMENTS IN THE INTEGRITY MANAGEMENT RULE

I. GUIDANCE ON DETERMINING A HIGH CONSEQUENCE AREA

To determine which segments of an operator's transmission pipeline system are covered for purposes of the integrity management program requirements, an operator must identify the high consequence areas. An operator must use method (1) or (2) from the definition in §192.903 to identify a high consequence area. An operator may apply one method to its entire pipeline system, or an operator may apply one method to individual portions of the pipeline system. (Refer to figure E.I.A for a diagram of a high consequence area).

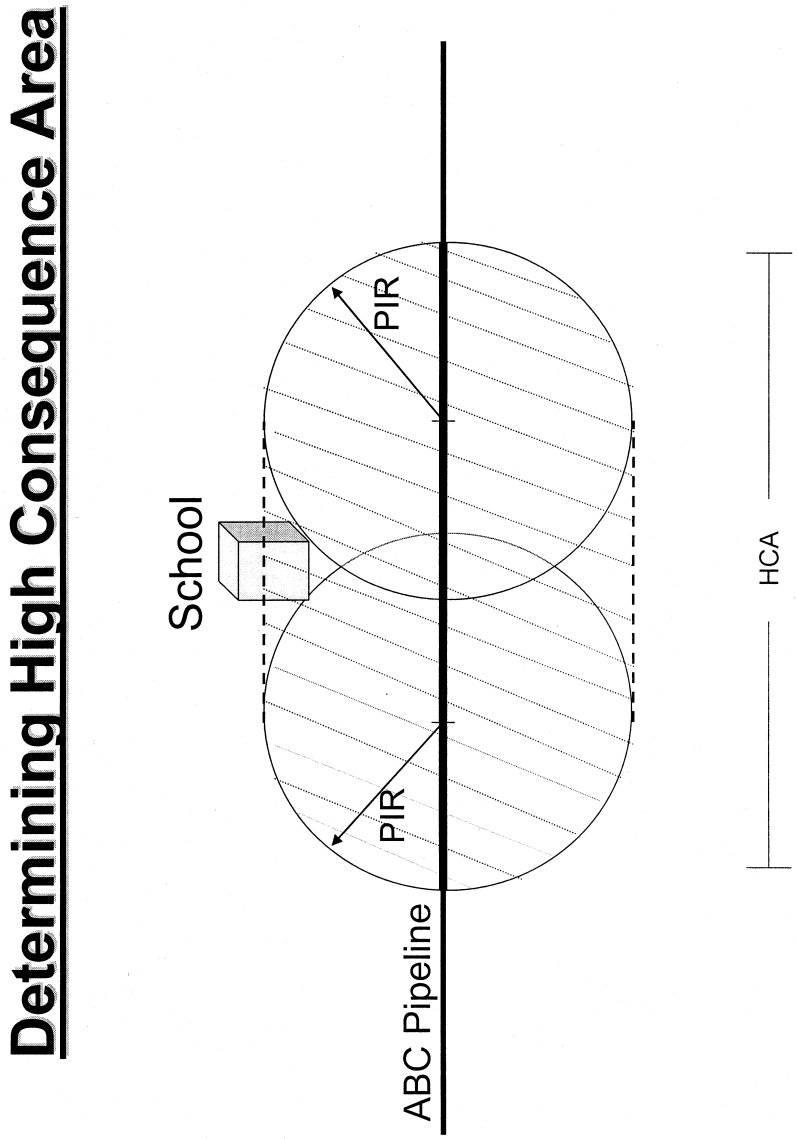

Figure E.I.A

II. GUIDANCE ON ASSESSMENT METHODS AND ADDITIONAL PREVENTIVE AND MITIGATIVE MEASURES FOR TRANSMISSION PIPELINES

(a) Table E.II.1 gives guidance to help an operator implement requirements on additional preventive and mitigative measures for addressing time dependent and independent threats for a transmission pipeline operating below 30% SMYS not in an HCA (*i.e.* outside of potential impact circle) but located within a Class 3 or Class 4 Location.

(b) Table E.II.2 gives guidance to help an operator implement requirements on assessment methods for addressing time dependent and independent threats for a transmission pipeline in an HCA.

(c) Table E.II.3 gives guidance on preventative & mitigative measures addressing time

dependent and independent threats for transmission pipelines that operate below 30% SMYS, in HCAs.

Table E.II.1: Preventive and Mitigative Measures for Transmission Pipelines Operating Below 30% SMYS not in an HCA but in a Class 3 or Class 4 Location

(Column 1) Threat	Existing 192 Requirements		(Column 4) Additional (to 192 requirements) Preventive and Mitigative Measures
	(Column 2) Primary	(Column 3) Secondary	
External Corrosion	455-(Gen. Post 1971), 457-(Gen. Pre-1971) 459-(Examination), 461-(Ext. coating) 463-(CP), 465-(Monitoring) 467-(Elect isolation), 469-Test stations) 471-(Test leads), 473-(Interference) 479-(Atmospheric), 481-(Atmospheric) 485-(Remedial), 705-(Patrol) 706-(Leak survey), 711 (Repair – gen.) 717-(Repair – perm.)	603-(Gen Oper'n) 613-(Surveillance)	For Cathodically Protected Transmission Pipeline: • Perform semi-annual leak surveys. For Unprotected Transmission Pipelines or for Cathodically Protected Pipe where Electrical Surveys are Impractical: • Perform quarterly leak surveys
Internal Corrosion	475-(Gen IC), 477-(IC monitoring) 485-(Remedial), 705-(Patrol) 706-(Leak survey), 711 (Repair – gen.) 717-(Repair – perm.)	53(a)-(Materials) 603-(Gen Oper'n) 613-(Surveillance)	• Perform semi-annual leak surveys.

3rd Party Damage	103-(Gen. Design), 111-(Design factor) 317-(Hazard prot), 327-(Cover) 614-(Dam. Prevent), 616-(Public education) 705-(Patrol), 707-(Line markers) 711 (Repair – gen.), 717-(Repair – perm.)	615–(Emerg. Plan)	• Participation in state one-call system, • Use of qualified operator employees and contractors to perform marking and locating of buried structures and in direct supervision of excavation work, AND • Either monitoring of excavations near operator's transmission pipelines, or bi-monthly patrol of transmission pipelines in class 3 and 4 locations. Any indications of unreported construction activity would require a follow up investigation to determine if mechanical damage occurred.

Table E.II.2 Assessment Requirements for Transmission Pipelines in HCAs (Re-assessment intervals are maximum allowed)

	Re-Assessment Requirements (see Note 3)					
	At or above 50% SMYS		At or above 30% SMYS up to 50% SMYS		Below 30% SMYS	
Baseline Assessment Method (see Note 3)	Max Re-Assessment Interval	Assessment Method	Max Re-Assessment Interval	Assessment Method	Max Re-Assessment Interval	Assessment Method
Pressure Testing	7	CDA	7	CDA	Ongoing	Preventative & Mitigative (P&M) Measures (see Table E.II.3), (see Note 2)
	10	Pressure Test or ILI or DA				
		Repeat inspection cycle every 10 years	15(see Note 1)	Pressure Test or ILI or DA (see Note 1)		
				Repeat inspection cycle every 15 years	20	Pressure Test or ILI or DA
						Repeat inspection cycle every 20 years
In-Line Inspection	7	CDA	7	CDA	Ongoing	Preventative & Mitigative (P&M) Measures (see Table E.II.3), (see Note 2)
	10	ILI or DA or Pressure Test				
		Repeat inspection cycle every 10 years	15(see Note 1)	ILI or DA or Pressure Test (see Note 1)		
				Repeat inspection cycle every 15 years	20	ILI or DA or Pressure Test

						Repeat inspection cycle every 20 years
Direct Assessment	7	CDA	7	CDA	Ongoing	Preventative & Mitigative (P&M) Measures (see Table E.II.3), (see Note 2)
	10	DA or ILI or Pressure Test				
		Repeat inspection cycle every 10 years	15(see Note 1)	DA or ILI or Pressure Test (see Note 1)		
				Repeat inspection cycle every 15 years	20	DA or ILI or Pressure Test
						Repeat inspection cycle every 20 years

Note 1: Operator may choose to utilize CDA at year 14, then utilize ILI, Pressure Test, or DA at year 15 as allowed under ASME B31.8S

Note 2: Operator may choose to utilize CDA at year 7 and 14 in lieu of P&M

Note 3: Operator may utilize "other technology that an operator demonstrates can provide an equivalent understanding of the condition of line pipe"

Table E.II.3

Preventative & Mitigative Measures addressing Time Dependent and Independent Threats for Transmission Pipelines that Operate Below 30% SMYS , in HCAs

Threat	Existing 192 Requirements		Additional (to 192 requirements) Preventive & Mitigative Measures
	Primary	Secondary	
External Corrosion	455-(Gen. Post 1971) 457-(Gen. Pre-1971) 459-(Examination) 461-(Ext. coating) 463-(CP) 465-(Monitoring) 467-(Elect isolation)	603-(Gen Oper) 613-(Surveil)	For Cathodically Protected Trmn. Pipelines • Perform an electrical survey (i.e. indirect examination tool/method) at least every 7 years. Results are to be utilized as part of an overall evaluation of the CP system and corrosion threat for the covered segment. Evaluation shall include consideration of leak repair and inspection records, corrosion monitoring records, exposed pipe inspection records, and the pipeline environment.

External Corrosion	469-Test stations) 471-(Test leads) 473-(Interference) 479-(Atmospheric) 481-(Atmospheric) 485-(Remedial) 705-(Patrol) 706-(Leak survey) 711 (Repair – gen.) 717-(Repair – perm.)		<u>For Unprotected Trmn. Pipelines or for Cathodically Protected Pipe where Electrical Surveys are Impracticable</u> • Conduct quarterly leak surveys AND • Every 1-1/2 years, determine areas of active corrosion by evaluation of leak repair and inspection records, corrosion monitoring records, exposed pipe inspection records, and the pipeline environment.
Internal Corrosion	475-(Gen IC) 477-(IC monitoring) 485-(Remedial) 705-(Patrol) 706-(Leak survey) 711 (Repair – gen.) 717-(Repair – perm.)	53(a)-(Materials) 603-(Gen Oper) 613-(Surveil)	• Obtain and review gas analysis data each calendar year for corrosive agents from transmission pipelines in HCAs, • Periodic testing of fluid removed from pipelines. Specifically, once each calendar year from each storage field that may affect transmission pipelines in HCAs, AND • At least every 7 years, integrate data obtained with applicable internal corrosion leak records, incident reports, safety related condition reports, repair records, patrol records, exposed pipe reports, and test records.

3rd Party Damage	103-(Gen. Design) 111-(Design factor) 317-(Hazard prot) 327-(Cover) 614-(Dam. Prevent) 616-(Public educat) 705-(Patrol) 707-(Line markers) 711 (Repair – gen.) 717-(Repair – perm.)	615 –(Emerg Plan)	• Participation in state one-call system, • Use of qualified operator employees and contractors to perform marking and locating of buried structures and in direct supervision of excavation work, AND • Either monitoring of excavations near operator's transmission pipelines, or bi-monthly patrol of transmission pipelines in HCAs or class 3 and 4 locations. Any indications of unreported construction activity would require a follow up investigation to determine if mechanical damage occurred.

[Amdt. 192–95, 69 FR 18234, Apr. 6, 2004, as amended by Amdt. 192–95, May 26, 2004]

PART 193—LIQUEFIED NATURAL GAS FACILITIES: FEDERAL SAFETY STANDARDS

Subpart A—General

Sec.
193.2001 Scope of part.
193.2003 [Reserved]
193.2005 Applicability.
193.2007 Definitions.
193.2009 Rules of regulatory construction.
193.2011 Reporting.
193.2013 Incorporation by reference.
193.2015 [Reserved]
193.2017 Plans and procedures.
193.2019 Mobile and temporary LNG facilities.

Subpart B—Siting Requirements

193.2051 Scope.
193.2055 [Reserved]
193.2057 Thermal radiation protection.
193.2059 Flammable vapor-gas dispersion protection.
193.2061–193.2065 [Reserved]
193.2067 Wind forces.
193.2069–193.2073 [Reserved]

Subpart C—Design

193.2101 Scope.

MATERIALS

193.2103–193.2117 [Reserved]
193.2119 Records.

DESIGN OF COMPONENTS AND BUILDINGS

193.2121–193.2153 [Reserved]

IMPOUNDMENT DESIGN AND CAPACITY

193.2155 Structural requirements.
193.2157–193.2159 [Reserved]
193.2161 Dikes, general.
193.2163–193.2165 [Reserved]
193.2167 Covered systems.
193.2169–193.2171 [Reserved]
193.2173 Water removal.
193.2175–193.2179 [Reserved]
193.2181 Impoundment capacity: LNG storage tanks.
193.2183–193.2185 [Reserved]

LNG STORAGE TANKS

193.2187 Nonmetallic membrane liner.
193.2189–193.2233 [Reserved]

Subpart D—Construction

193.2301 Scope.
193.2303 Construction acceptance.
193.2304 Corrosion control overview.
193.2305–193.2319 [Reserved]
193.2321 Nondestructive tests.
193.2323–193.2329 [Reserved]

Subpart E—Equipment

193.2401 Scope.

VAPORIZATION EQUIPMENT

193.2403–193.2439 [Reserved]
193.2441 Control center.
193.2443 [Reserved]
193.2445 Sources of power.

Subpart F—Operations

193.2501 Scope.
193.2503 Operating procedures.
193.2505 Cooldown.
193.2507 Monitoring operations.
193.2509 Emergency procedures.
193.2511 Personnel safety.
193.2513 Transfer procedures.
193.2515 Investigations of failures.
193.2517 Purging.
193.2519 Communication systems.
193.2521 Operating records.

Subpart G—Maintenance

193.2601 Scope.
193.2603 General.
193.2605 Maintenance procedures.
193.2607 Foreign material.
193.2609 Support systems.
193.2611 Fire protection.
193.2613 Auxiliary power sources.
193.2615 Isolating and purging.
193.2617 Repairs.
193.2619 Control systems.
193.2621 Testing transfer hoses.
193.2623 Inspecting LNG storage tanks.
193.2625 Corrosion protection.
193.2627 Atmospheric corrosion control.
193.2629 External corrosion control: buried or submerged components.
193.2631 Internal corrosion control.
193.2633 Interference currents.
193.2635 Monitoring corrosion control.
193.2637 Remedial measures.
193.2639 Maintenance records.

Subpart H—Personnel Qualifications and Training

193.2701 Scope.
193.2703 Design and fabrication.
193.2705 Construction, installation, inspection, and testing.
193.2707 Operations and maintenance.
193.2709 Security.
193.2711 Personnel health.
193.2713 Training: operations and maintenance.
193.2715 Training: security.
193.2717 Training: fire protection.
193.2719 Training: records.

Subpart I—Fire Protection

193.2801 Fire protection.
193.2803–193.2821 [Reserved]

Subpart J—Security

193.2901 Scope.
193.2903 Security procedures.
193.2905 Protective enclosures.
193.2907 Protective enclosure construction.
193.2909 Security communications.
193.2911 Security lighting.
193.2913 Security monitoring.
193.2915 Alternative power sources.
193.2917 Warning signs.

AUTHORITY: 49 U.S.C. 5103, 60102, 60103, 60104, 60108, 60109, 60110, 60113, 60118; and 49 CFR 1.53.

SOURCE: 45 FR 9203, Feb. 11, 1980, unless otherwise noted.

EDITORIAL NOTE: Nomenclature changes to part 193 appear at 71 FR 33408, June 9, 2006.

Subpart A—General

§ 193.2001 Scope of part.

(a) This part prescribes safety standards for LNG facilities used in the transportation of gas by pipeline that is subject to the pipeline safety laws (49 U.S.C. 60101 *et seq.*) and Part 192 of this chapter.

(b) This part does not apply to:

(1) LNG facilities used by ultimate consumers of LNG or natural gas.

(2) LNG facilities used in the course of natural gas treatment or hydrocarbon extraction which do not store LNG.

(3) In the case of a marine cargo transfer system and associated facilities, any matter other than siting pertaining to the system or facilities between the marine vessel and the last manifold (or in the absence of a manifold, the last valve) located immediately before a storage tank.

(4) Any LNG facility located in navigable waters (as defined in Section 3(8) of the Federal Power Act (16 U.S.C. 796(8)).

[45 FR 9203, Feb. 11, 1980, as amended by Amdt. 193–1, 45 FR 57418, Aug. 28, 1980; Amdt. 193–10, 61 FR 18517, Apr. 26, 1996]

§ 193.2003 [Reserved]

§ 193.2005 Applicability.

(a) Regulations in this part governing siting, design, installation, or construction of LNG facilities (including material incorporated by reference in these regulations) do not apply to LNG facilities in existence or under construction when the regulations go into effect.

(b) If an existing LNG facility (or facility under construction before March 31, 2000 is replaced, relocated or significantly altered after March 31, 2000, the facility must comply with the applicable requirements of this part governing, siting, design, installation, and construction, except that:

(1) The siting requirements apply only to LNG storage tanks that are significantly altered by increasing the original storage capacity or relocated, and

(2) To the extent compliance with the design, installation, and construction requirements would make the replaced, relocated, or altered facility incompatible with the other facilities or would otherwise be impractical, the replaced, relocated, or significantly altered facility may be designed, installed, or constructed in accordance with the original specifications for the facility, or in another manner subject to the approval of the Administrator.

[Amdt. 193–17, 65 FR 10958, Mar. 1, 2000, as amended by Amdt. 193–18, 69 FR 11336, Mar. 10, 2004]

§ 193.2007 Definitions.

As used in this part:

Administrator means the Administrator, Pipeline and Hazardous Materials Safety Administration or his or her delegate.

Ambient vaporizer means a vaporizer which derives heat from naturally occurring heat sources, such as the atmosphere, sea water, surface waters, or geothermal waters.

Cargo transfer system means a component, or system of components functioning as a unit, used exclusively for transferring hazardous fluids in bulk between a tank car, tank truck, or marine vessel and a storage tank.

Component means any part, or system of parts functioning as a unit, including, but not limited to, piping, processing equipment, containers, control devices, impounding systems, lighting, security devices, fire control equipment, and communication equipment,

whose integrity or reliability is necessary to maintain safety in controlling, processing, or containing a hazardous fluid.

Container means a component other than piping that contains a hazardous fluid.

Control system means a component, or system of components functioning as a unit, including control valves and sensing, warning, relief, shutdown, and other control devices, which is activated either manually or automatically to establish or maintain the performance of another component.

Controllable emergency means an emergency where reasonable and prudent action can prevent harm to people or property.

Design pressure means the pressure used in the design of components for the purpose of determining the minimum permissible thickness or physical characteristics of its various parts. When applicable, static head shall be included in the design pressure to determine the thickness of any specific part.

Determine means make an appropriate investigation using scientific methods, reach a decision based on sound engineering judgment, and be able to demonstrate the basis of the decision.

Dike means the perimeter of an impounding space forming a barrier to prevent liquid from flowing in an unintended direction.

Emergency means a deviation from normal operation, a structural failure, or severe environmental conditions that probably would cause harm to people or property.

Exclusion zone means an area surrounding an LNG facility in which an operator or government agency legally controls all activities in accordance with §193.2057 and §193.2059 for as long as the facility is in operation.

Fail-safe means a design feature which will maintain or result in a safe condition in the event of malfunction or failure of a power supply, component, or control device.

g means the standard acceleration of gravity of 9.806 meters per second^2 (32.17 feet per second^2).

Gas, except when designated as inert, means natural gas, other flammable gas, or gas which is toxic or corrosive.

Hazardous fluid means gas or hazardous liquid.

Hazardous liquid means LNG or a liquid that is flammable or toxic.

Heated vaporizer means a vaporizer which derives heat from other than naturally occurring heat sources.

Impounding space means a volume of space formed by dikes and floors which is designed to confine a spill of hazardous liquid.

Impounding system includes an impounding space, including dikes and floors for conducting the flow of spilled hazardous liquids to an impounding space.

Liquefied natural gas or *LNG* means natural gas or synthetic gas having methane (CH_4) as its major constituent which has been changed to a liquid.

LNG facility means a pipeline facility that is used for liquefying natural gas or synthetic gas or transferring, storing, or vaporizing liquefied natural gas.

LNG plant means an LNG facility or system of LNG facilities functioning as a unit.

m^3 means a volumetric unit which is one cubic metre, 6.2898 barrels, 35.3147 ft.^{3}, or 264.1720 U.S. gallons, each volume being considered as equal to the other.

Maximum allowable working pressure means the maximum gage pressure permissible at the top of the equipment, containers or pressure vessels while operating at design temperature.

Normal operation means functioning within ranges of pressure, temperature, flow, or other operating criteria required by this part.

Operator means a person who owns or operates an LNG facility.

Person means any individual, firm, joint venture, partnership, corporation, association, state, municipality, cooperative association, or joint stock association and includes any trustee, receiver, assignee, or personal representative thereof.

Pipeline facility means new and existing piping, rights-of-way, and any equipment, facility, or building used in the transportation of gas or in the treatment of gas during the course of transportation.

Piping means pipe, tubing, hoses, fittings, valves, pumps, connections, safety devices or related components for containing the flow of hazardous fluids.

Storage tank means a container for storing a hazardous fluid.

Transfer piping means a system of permanent and temporary piping used for transferring hazardous fluids between any of the following: Liquefaction process facilities, storage tanks, vaporizers, compressors, cargo transfer systems, and facilities other than pipeline facilities.

Transfer system includes transfer piping and cargo transfer system.

Vaporization means an addition of thermal energy changing a liquid to a vapor or gaseous state.

Vaporizer means a heat transfer facility designed to introduce thermal energy in a controlled manner for changing a liquid to a vapor or gaseous state.

Waterfront LNG plant means an LNG plant with docks, wharves, piers, or other structures in, on, or immediately adjacent to the navigable waters of the United States or Puerto Rico and any shore area immediately adjacent to those waters to which vessels may be secured and at which LNG cargo operations may be conducted.

[45 FR 9203, Feb. 11, 1980, as amended by Amdt. 193–1, 45 FR 57418, Aug. 28, 1980; Amdt. 193–2, 45 FR 70404, Oct. 23, 1980; Amdt. 193–10, 61 FR 18517, Apr. 26, 1996; Amdt. 193–17, 65 FR 10958, Mar. 1, 2000; 68 FR 11749, Mar. 12, 2003; 70 FR 11140, Mar. 8, 2005]

§ 193.2009 Rules of regulatory construction.

(a) As used in this part:

(1) *Includes* means including but not limited to;

(2) *May* means is permitted to or is authorized to;

(3) *May not* means is not permitted to or is not authorized to; and

(4) *Shall* or *must* is used in the mandatory and imperative sense.

(b) In this part:

(1) Words importing the singular include the plural; and

(2) Words importing the plural include the singular.

§ 193.2011 Reporting.

Incidents, safety-related conditions, and annual pipeline summary data for LNG plants or facilities must be reported in accordance with the requirements of Part 191 of this subchapter.

[75 FR 72906, Nov. 26, 2010]

§ 193.2013 Incorporation by reference.

(a) Any document or portion thereof incorporated by reference in this part is included in this part as though it were printed in full. When only a portion of a document is referenced, then this part incorporates only that referenced portion of the document and the remainder is not incorporated. Applicable editions are listed in paragraph (c) of this section in parentheses following the title of the referenced material. Earlier editions listed in previous editions of this section may be used for components manufactured, designed, or installed in accordance with those earlier editions at the time they were listed. The user must refer to the appropriate previous edition of 49 CFR for a listing of the earlier editions.

(b) All incorporated materials are available for inspection in the Pipeline and Hazardous Materials Safety Administration, PHP–30, 1200 New Jersey Avenue, SE., Washington, DC, 20590–0001, or at the National Archives and Records Administration (NARA). For information on the availability of this material at NARA, call 202–741–6030 or go to: *http://www.archives.gov/federal_register/code_of_federal_regulations/IBR_locations.html*.

Documents incorporated by reference are available from the publishers as follows:

A. American Gas Association (AGA), 400 North Capitol Street, NW., Washington, DC 20001.

B. American Society of Civil Engineers (ASCE), Parallel Centre, 1801 Alexander Bell Drive, Reston, VA 20191–4400.

C. ASME International (ASME), Three Park Avenue, New York, NY 10016–5990.

D. Gas Technology Institute (GTI), 1700 S. Mount Prospect Road, Des Plaines, IL 60018.

E. National Fire Protection Association (NFPA), 1 Batterymarch Park, P.O. Box 9101, Quincy, MA 02269–9101.

(c) Documents incorporated by reference.

Source and name of referenced material	49 CFR Reference
A. American Gas Association (AGA):	
(1) "Purging Principles and Practices" (3rd edition, 2001)	§§ 193.2513; 193.2517; 193.2615.
B. American Petroleum Institute (API):	
(1) API Standard 620 "Design and Construction of Large, Welded, Low-Pressure Storage Tanks" (11th edition February 2008, addendum 1, March 2009).	§§ 193.2101(b); 193.2321(b)(2).
C. American Society of Civil Engineers (ASCE):	
(1) ASCE/SEI 7–05 "Minimum Design Loads for Buildings and Other Structures" (2005 edition, includes supplement No. 1 and Errata).	§ 193.2067(b)(1).
D. ASME International (ASME):	
(1) 2007 ASME Boiler & Pressure Vessel Code, Section VIII, Division 1, "Rules for Construction of Pressure Vessels" (2007 edition, July 1, 2007).	§ 193.2321(a).
(2) 2007 ASME Boiler & Pressure Vessel Code, Section VIII, Division 2, "Alternative Rules, Rules for Construction of Pressure Vessels" (2007 edition, July 1, 2007).	§ 193.2321(a).
E. Gas Technology Institute (GTI) formerly the Gas Research Institute (GRI):	
(1) GTI–04/0032 LNGFIRE3: A Thermal Radiation Model for LNG Fires (March 2004).	§ 193.2057(a).
(2) GTI–04/0049 (April 2004) "LNG Vapor Dispersion Prediction with the DEGADIS 2.1: Dense Gas Dispersion Model For LNG Vapor Dispersion".	§ 193.2059.
(3) GRI–96/0396.5 "Evaluation of Mitigation Methods for Accidental LNG Releases, Volume 5: Using FEM3A for LNG Accident Consequence Analyses" (April 1997).	§ 193.2059.
F. National Fire Protection Association (NFPA):	
(1) NFPA 59A, (2001) "Standard for the Production, Storage, and Handling of Liquefied Natural Gas (LNG)".	§§ 193.2019; 193.2051; 193.2057; 193.2059; 193.2101(a); 193.2301; 193.2303; 193.2401; 193.2521; 193.2639; 193.2801.
(2) NFPA 59A, "Standard for the Production, Storage, and Handling of Liquefied Natural Gas (LNG)" (2006 edition, Approved August 18, 2005).	§§ 193.2101(b); 193.2321(b).

[Amdt. 193–19, 71 FR 33408, June 9, 2006; 73 FR 16570, Mar. 28, 2008; 74 FR 2894, Jan. 16, 2009; Amdt. 193–22, 75 FR 48604, Aug. 11, 2010]

§ 193.2015 [Reserved]

§ 193.2017 Plans and procedures.

(a) Each operator shall maintain at each LNG plant the plans and procedures required for that plant by this part. The plans and procedures must be available upon request for review and inspection by the Administrator or any State Agency that has submitted a current certification or agreement with respect to the plant under the pipeline safety laws (49 U.S.C. 60101 *et seq.*). In addition, each change to the plans or procedures must be available at the LNG plant for review and inspection within 20 days after the change is made.

(b) The Associate Administrator or the State Agency that has submitted a current certification under section 5(a) of the Natural Gas Pipeline Safety Act with respect to the pipeline facility governed by an operator's plans and procedures may, after notice and opportunity for hearing as provided in 49 CFR 190.206 or the relevant State procedures, require the operator to amend its plans and procedures as necessary to provide a reasonable level of safety.

(c) Each operator must review and update the plans and procedures required by this part—

(1) When a component is changed significantly or a new component is installed; and

(2) At intervals not exceeding 27 months, but at least once every 2 calendar years.

[Amdt. 193–2, 45 FR 70404, Oct. 23, 1980, as amended by Amdt. 193–7, 56 FR 31090, July 9, 1991; Amdt. 193–10, 61 FR 18517, Apr. 26, 1996; Amdt. 193–18, 69 FR 11336, Mar. 10, 2004; Amdt. 193–24, 78 FR 58915, Sept. 25, 2013]

§ 193.2019 Mobile and temporary LNG facilities.

(a) Mobile and temporary LNG facilities for peakshaving application, for service maintenance during gas pipeline systems repair/alteration, or for other short term applications need not meet the requirements of this part if the facilities are in compliance with applicable sections of NFPA 59A (incorporated by reference, *see* § 193.2013).

(b) The State agency having jurisdiction over pipeline safety in the State in which the portable LNG equipment is to be located must be provided with a location description for the installation at least 2 weeks in advance, including to the extent practical, the details of siting, leakage containment or control, fire fighting equipment, and methods employed to restrict public access, except that in the case of emergency where such notice is not possible, as much advance notice as possible must be provided.

[Amdt. 193–14, 62 FR 41311, Aug. 1, 1997, as amended by Amdt. 193–18, 11336, Mar. 10, 2004]

Subpart B—Siting Requirements

§ 193.2051 Scope.

Each LNG facility designed, constructed, replaced, relocated or significantly altered after March 31, 2000 must be provided with siting requirements in accordance with the requirements of this part and of NFPA 59A (incorporated by reference, *see* § 193.2013). In the event of a conflict between this part and NFPA 59A, this part prevails.

[Amdt. 193–17, 65 FR 10958, Mar. 1, 2000, as amended by Amdt. 193–18, 69 FR 11336, Mar. 10, 2004]

§ 193.2055 [Reserved]

§ 193.2057 Thermal radiation protection.

Each LNG container and LNG transfer system must have a thermal exclusion zone in accordance with section 2.2.3.2 of NFPA 59A (incorporated by reference, *see* § 193.2013) with the following exceptions:

(a) The thermal radiation distances must be calculated using Gas Technology Institute's (GTI) report or computer model GTI–04/0032 LNGFIRE3: A Thermal Radiation Model for LNG Fires (incorporated by reference, *see* § 193.2013). The use of other alternate models which take into account the same physical factors and have been validated by experimental test data may be permitted subject to the Administrator's approval.

(b) In calculating exclusion distances, the wind speed producing the maximum exclusion distances shall be used except for wind speeds that occur less than 5 percent of the time based on recorded data for the area.

(c) In calculating exclusion distances, the ambient temperature and relative humidity that produce the maximum exclusion distances shall be used except for values that occur less than five percent of the time based on recorded data for the area.

[Amdt. 193–17, 65 FR 10958, Mar. 1, 2000, as amended by Amdt. 193–18, 69 FR 11336, Mar. 10, 2004; Amdt. 193–22, 75 FR 48604, Aug. 11, 2010]

§ 193.2059 Flammable vapor-gas dispersion protection.

Each LNG container and LNG transfer system must have a dispersion exclusion zone in accordance with sections 2.2.3.3 and 2.2.3.4 of NFPA 59A (incorporated by reference, *see* § 193.2013) with the following exceptions:

(a) Flammable vapor-gas dispersion distances must be determined in accordance with the model described in the Gas Research Institute report GRI–89/0242 (incorporated by reference, *see* § 193.2013), ''LNG Vapor Dispersion Prediction with the DEGADIS Dense Gas Dispersion Model.'' Alternatively, in order to account for additional cloud dilution which may be caused by the complex flow patterns induced by tank and dike structure, dispersion distances may be calculated in accordance with the model described in the Gas Research Institute report GRI–96/0396.5 (incorporated by reference, *see* § 193.2013), ''Evaluation of Mitigation Methods for Accidental LNG Releases. Volume 5: Using FEM3A for LNG Accident Consequence Analyses''. The use of alternate models which take into account the same physical factors and have been validated by experimental test data shall be permitted, subject to the Administrator's approval.

(b) The following dispersion parameters must be used in computing dispersion distances:

(1) Average gas concentration in air = 2.5 percent.

(2) Dispersion conditions are a combination of those which result in longer predicted downwind dispersion distances than other weather conditions at the site at least 90 percent of the time, based on figures maintained by

National Weather Service of the U.S. Department of Commerce, or as an alternative where the model used gives longer distances at lower wind speeds, Atmospheric Stability (Pasquill Class) F, wind speed = 4.5 miles per hour (2.01 meters/sec) at reference height of 10 meters, relative humidity = 50.0 percent, and atmospheric temperature = average in the region.

(3) The elevation for contour (receptor) output H = 0.5 meters.

(4) A surface roughness factor of 0.03 meters shall be used. Higher values for the roughness factor may be used if it can be shown that the terrain both upwind and downwind of the vapor cloud has dense vegetation and that the vapor cloud height is more than ten times the height of the obstacles encountered by the vapor cloud.

(c) The design spill shall be determined in accordance with section 2.2.3.5 of NFPA 59A (incorporated by reference, *see* § 193.2013).

[Amdt. 193–17, 65 FR 10959, Mar. 1, 2000, as amended by Amdt. 193–18, 69 FR 11336, Mar. 10, 2004]

§§ 193.2061–193.2065 [Reserved]

§ 193.2067 Wind forces.

(a) LNG facilities must be designed to withstand without loss of structural or functional integrity:

(1) The direct effect of wind forces;

(2) The pressure differential between the interior and exterior of a confining, or partially confining, structure; and

(3) In the case of impounding systems for LNG storage tanks, impact forces and potential penetrations by wind borne missiles.

(b) The wind forces at the location of the specific facility must be based on one of the following:

(1) For shop fabricated containers of LNG or other hazardous fluids with a capacity of not more than 70,000 gallons, applicable wind load data in ASCE/SEI 7–05 (incorporated by reference, *see* § 193.2013).

(2) For all other LNG facilities:

(i) An assumed sustained wind velocity of not less than 150 miles per hour, unless the Administrator finds a lower velocity is justified by adequate supportive data; or

(ii) The most critical combination of wind velocity and duration, with respect to the effect on the structure, having a probability of exceedance in a 50-year period of 0.5 percent or less, if adequate wind data are available and the probabilistic methodology is reliable.

[45 FR 9203, Feb. 11, 1980, as amended by Amdt. 193–1, 45 FR 57419, Aug. 28, 1980; 58 FR 14522, Mar. 18, 1993; Amdt. 193–16, 63 FR 37505, July 13, 1998; Amdt. 193–17, 65 FR 10959, Mar. 1, 2000; Amdt. 193–19, 71 FR 33409, June 9, 2006; Amdt. 193–22, 75 FR 48604, Aug. 11, 2010]

§§ 193.2069–193.2073 [Reserved]

Subpart C—Design

§ 193.2101 Scope.

(a) Each LNG facility designed after March 31, 2000 must comply with requirements of this part and of NFPA 59A (2001) (incorporated by reference, *see* § 193.2013). If there is a conflict between this Part and NFPA 59A, this part prevails. Unless otherwise specified, all references to NFPA 59A in this Part are to the 2001 edition.

(b) Stationary LNG storage tanks must comply with Section 7.2.2 of NFPA 59A (2006) (incorporated by reference, *see* § 193.2013) for seismic design of field fabricated tanks. All other LNG storage tanks must comply with API Standard 620 (incorporated by reference, *see* § 193.2013) for seismic design.

[Amdt. 193–22, 75 FR 48604, Aug. 11, 2010]

MATERIALS

§§ 193.2103–193.2117 [Reserved]

§ 193.2119 Records

Each operator shall keep a record of all materials for components, buildings, foundations, and support systems, as necessary to verify that material properties meet the requirements of this part. These records must be maintained for the life of the item concerned.

DESIGN OF COMPONENTS AND BUILDINGS

§§ 193.2121–193.2153 [Reserved]

IMPOUNDMENT DESIGN AND CAPACITY

§ 193.2155 Structural requirements.

(a) The structural members of an impoundment system must be designed and constructed to prevent impairment of the system's performance reliability and structural integrity as a result of the following:

(1) The imposed loading from—

(i) Full hydrostatic head of impounded LNG;

(ii) Hydrodynamic action, including the effect of any material injected into the system for spill control;

(iii) The impingement of the trajectory of an LNG jet discharged at any predictable angle; and

(iv) Anticipated hydraulic forces from a credible opening in the component or item served, assuming that the discharge pressure equals design pressure.

(2) The erosive action from a spill, including jetting of spilling LNG, and any other anticipated erosive action including surface water runoff, ice formation, dislodgement of ice formation, and snow removal.

(3) The effect of the temperature, any thermal gradient, and any other anticipated degradation resulting from sudden or localized contact with LNG.

(4) Exposure to fire from impounded LNG or from sources other than impounded LNG.

(5) If applicable, the potential impact and loading on the dike due to—

(i) Collapse of the component or item served or adjacent components; and

(ii) If the LNG facility adjoins the right-of-way of any highway or railroad, collision by or explosion of a train, tank car, or tank truck that could reasonably be expected to cause the most severe loading.

(b) An LNG storage tank must not be located within a horizontal distance of one mile (1.6 km) from the ends, or ¼ mile (0.4 km) from the nearest point of a runway, whichever is longer. The height of LNG structures in the vicinity of an airport must also comply with Federal Aviation Administration requirements in 14 CFR Section 1.1.

[45 FR 9203, Feb. 11, 1980, as amended by Amdt. 193–17, 65 FR 10959, Mar. 1, 2000]

§§ 193.2157–193.2159 [Reserved]

§ 193.2161 Dikes, general.

An outer wall of a component served by an impounding system may not be used as a dike unless the outer wall is constructed of concrete.

[Amdt. 193–17, 65 FR 10959, Mar. 1, 2000]

§§ 193.2163–193.2165 [Reserved]

§ 193.2167 Covered systems.

A covered impounding system is prohibited except for concrete wall designed tanks where the concrete wall is an outer wall serving as a dike.

[Amdt. 193–17, 65 FR 10959, Mar. 1, 2000]

§§ 193.2169–193.2171 [Reserved]

§ 193.2173 Water removal.

(a) Impoundment areas must be constructed such that all areas drain completely to prevent water collection. Drainage pumps and piping must be provided to remove water from collecting in the impoundment area. Alternative means of draining may be acceptable subject to the Administrator's approval.

(b) The water removal system must have adequate capacity to remove water at a rate equal to 25% of the maximum predictable collection rate from a storm of 10-year frequency and 1-hour duration, and other natural causes. For rainfall amounts, operators must use the ''Rainfall Frequency Atlas of the United States'' published by the National Weather Service of the U.S. Department of Commerce.

(c) Sump pumps for water removal must—

(1) Be operated as necessary to keep the impounding space as dry as practical; and

(2) If sump pumps are designed for automatic operation, have redundant automatic shutdown controls to prevent operation when LNG is present.

[45 FR 9203, Feb. 11, 1980, as amended by Amdt. 193–17, 65 FR 10959, Mar. 1, 2000]

§§ 193.2175–193.2179 [Reserved]

§ 193.2181 Impoundment capacity: LNG storage tanks.

Each impounding system serving an LNG storage tank must have a minimum volumetric liquid impoundment capacity of:

(a) 110 percent of the LNG tank's maximum liquid capacity for an impoundment serving a single tank;

(b) 100 percent of all tanks or 110 percent of the largest tank's maximum liquid capacity, whichever is greater, for the impoundment serving more than one tank; or

(c) If the dike is designed to account for a surge in the event of catastrophic failure, then the impoundment capacity may be reduced to 100 percent in lieu of 110 percent.

[Amdt. 193–17, 65 FR 10960, Mar. 1, 2000]

§§ 193.2183–193.2185 [Reserved]

LNG STORAGE TANKS

§ 193.2187 Nonmetallic membrane liner.

A flammable nonmetallic membrane liner may not be used as an inner container in a storage tank.

[Amdt. 193–17, 65 FR 10960, Mar. 1, 2000]

§§ 193.2189–193.2233 [Reserved]

Subpart D—Construction

§ 193.2301 Scope.

Each LNG facility constructed after March 31, 2000 must comply with requirements of this part and of NFPA 59A (incorporated by reference *see* § 193.2013). In the event of a conflict between this part and NFPA 59A, this part prevails.

[Amdt. 193–17, 65 FR 10960, Mar. 1, 2000, as amended by Amdt. 193–18, 69 FR 11336, Mar. 10, 2004]

§ 193.2303 Construction acceptance.

No person may place in service any component until it passes all applicable inspections and tests prescribed by this subpart and NFPA 59A (incorporated by reference, *see* § 193.2013).

[45 FR 9203, Feb. 11, 1980, as amended by Amdt. 193–17, 65 FR 10960, Mar. 1, 2000; Amdt. 193–18, 69 FR 11337, Mar. 10, 2004]

§ 193.2304 Corrosion control overview.

(a) Subject to paragraph (b) of this section, components may not be constructed, repaired, replaced, or significantly altered until a person qualified under § 193.2707(c) reviews the applicable design drawings and materials specifications from a corrosion control viewpoint and determines that the materials involved will not impair the safety or reliability of the component or any associated components.

(b) The repair, replacement, or significant alteration of components must be reviewed only if the action to be taken—

(1) Involves a change in the original materials specified;

(2) Is due to a failure caused by corrosion; or

(3) Is occasioned by inspection revealing a significant deterioration of the component due to corrosion.

[Amdt. 193–2, 45 FR 70404, Oct. 23, 1980]

§§ 193.2305–193.2319 [Reserved]

§ 193.2321 Nondestructive tests.

(a) The butt welds in metal shells of storage tanks with internal design pressure above 15 psig must be nondestructively examined in accordance with the ASME Boiler and Pressure Vessel Code (Section VIII Division 1) (incorporated by reference, *see* § 193.2013), except that 100 percent of welds that are both longitudinal (or meridional) and circumferential (or latitudinal) of hydraulic load bearing shells with curved surfaces that are subject to cryogenic temperatures must be nondestructively examined in accordance with the ASME Boiler and Pressure Vessel Code (Section VIII Division 1) (incorporated by reference, *see* § 193.2013).

(b) For storage tanks with internal design pressures at 15 psig or less, ultrasonic examinations of welds on metal containers must comply with the following:

(1) Section 7.3.1.2 of NFPA 59A (2006) (incorporated by reference, *see* § 193.2013);

(2) Appendices Q and C of API 620 Standard (incorporated by reference, *see* § 193.2013);

(c) Ultrasonic examination records must be retained for the life of the facility. If electronic records are kept, they must be retained in a manner so that they cannot be altered by any means; and

(d) The ultrasonic equipment used in the examination of welds must be calibrated at a frequency no longer than eight hours. Such calibrations must verify the examination of welds against a calibration standard. If the ultrasonic equipment is found to be out of calibration, all previous weld inspections that are suspect must be reexamined.

[Amdt. 193–22, 75 FR 48605, Aug. 11, 2010]

§§ 193.2323–193.2329 [Reserved]

Subpart E—Equipment

§ 193.2401 Scope.

After March 31, 2000, each new, replaced, relocated or significantly altered vaporization equipment, liquefaction equipment, and control systems must be designed, fabricated, and installed in accordance with requirements of this part and of NFPA 59A. In the event of a conflict between this part and NFPA 59A (incorporated by reference, *see* § 193.2013), this part prevails.

[Amdt. 193–17, 65 FR 10960, Mar. 1, 2000, as amended by Amdt. 193–18, 69 FR 11337, Mar. 10, 2004]

VAPORIZATION EQUIPMENT

§§ 193.2403–193.2439 [Reserved]

§ 193.2441 Control center.

Each LNG plant must have a control center from which operations and warning devices are monitored as required by this part. A control center must have the following capabilities and characteristics:

(a) It must be located apart or protected from other LNG facilities so that it is operational during a controllable emergency.

(b) Each remotely actuated control system and each automatic shutdown control system required by this part must be operable from the control center.

(c) Each control center must have personnel in continuous attendance while any of the components under its control are in operation, unless the control is being performed from another control center which has personnel in continuous attendance.

(d) If more than one control center is located at an LNG Plant, each control center must have more than one means of communication with each other center.

(e) Each control center must have a means of communicating a warning of hazardous conditions to other locations within the plant frequented by personnel.

§ 193.2443 [Reserved]

§ 193.2445 Sources of power.

(a) Electrical control systems, means of communication, emergency lighting, and firefighting systems must have at least two sources of power which function so that failure of one source does not affect the capability of the other source.

(b) Where auxiliary generators are used as a second source of electrical power:

(1) They must be located apart or protected from components so that they are not unusable during a controllable emergency; and

(2) Fuel supply must be protected from hazards.

Subpart F—Operations

SOURCE: Amdt. 193–2, 45 FR 70405, Oct. 23, 1980, unless otherwise noted.

§ 193.2501 Scope.

This subpart prescribes requirements for the operation of LNG facilities.

§ 193.2503 Operating procedures.

Each operator shall follow one or more manuals of written procedures to provide safety in normal operation and in responding to an abnormal operation that would affect safety. The procedures must include provisions for:

(a) Monitoring components or buildings according to the requirements of § 193.2507.

(b) Startup and shutdown, including for initial startup, performance testing

to demonstrate that components will operate satisfactory in service.

(c) Recognizing abnormal operating conditions.

(d) Purging and inerting components according to the requirements of § 193.2517.

(e) In the case of vaporization, maintaining the vaporization rate, temperature and pressure so that the resultant gas is within limits established for the vaporizer and the downstream piping.

(f) In the case of liquefaction, maintaining temperatures, pressures, pressure differentials and flow rates, as applicable, within their design limits for:

(1) Boilers;

(2) Turbines and other prime movers;

(3) Pumps, compressors, and expanders;

(4) Purification and regeneration equipment; and

(5) Equipment within cold boxes.

(g) Cooldown of components according to the requirements of § 193.2505.

[Amdt. 193–2, 45 FR 70405, Oct. 23, 1980, as amended by Amdt. 193–18, 69 FR 11337, Mar. 10, 2004]

§ 193.2505 Cooldown.

(a) The cooldown of each system of components that is subjected to cryogenic temperatures must be limited to a rate and distribution pattern that keeps thermal stresses within design limits during the cooldown period, paying particular attention to the performance of expansion and contraction devices.

(b) After cooldown stabilization is reached, cryogenic piping systems must be checked for leaks in areas of flanges, valves, and seals.

§ 193.2507 Monitoring operations.

Each component in operation or building in which a hazard to persons or property could exist must be monitored to detect fire or any malfunction or flammable fluid that could cause a hazardous condition. Monitoring must be accomplished by watching or listening from an attended control center for warning alarms, such as gas, temperature, pressure, vacuum, and flow alarms, or by conducting an inspection or test at intervals specified in the operating procedures.

[Amdt, 193–2, 45 FR 70405, Oct. 23, 1980, as amended by Amdt. 193–18, 69 FR 11337, Mar. 10, 2004]

§ 193.2509 Emergency procedures.

(a) Each operator shall determine the types and places of emergencies other than fires that may reasonably be expected to occur at an LNG plant due to operating malfunctions, structural collapse, personnel error, forces of nature, and activities adjacent to the plant.

(b) To adequately handle each type of emergency identified under paragraph (a) of this section and each fire emergency, each operator must follow one or more manuals of written procedures. The procedures must provide for the following:

(1) Responding to controllable emergencies, including notifying personnel and using equipment appropriate for handling the emergency.

(2) Recognizing an uncontrollable emergency and taking action to minimize harm to the public and personnel, including prompt notification of appropriate local officials of the emergency and possible need for evacuation of the public in the vicinity of the LNG plant.

(3) Coordinating with appropriate local officials in preparation of an emergency evacuation plan, which sets forth the steps required to protect the public in the event of an emergency, including catastrophic failure of an LNG storage tank.

(4) Cooperating with appropriate local officials in evacuations and emergencies requiring mutual assistance and keeping these officials advised of:

(i) The LNG plant fire control equipment, its location, and quantity of units located throughout the plant;

(ii) Potential hazards at the plant, including fires;

(iii) Communication and emergency control capabilities at the LNG plant; and

(iv) The status of each emergency.

[Amdt. 193–2, 45 FR 70405, Oct. 23, 1980, as amended by Amdt. 193–18, 69 FR 11337, Mar. 10, 2004]

§ 193.2511 Personnel safety.

(a) Each operator shall provide any special protective clothing and equipment necessary for the safety of personnel while they are performing emergency response duties.

(b) All personnel who are normally on duty at a fixed location, such as a building or yard, where they could be harmed by thermal radiation from a burning pool of impounded liquid, must be provided a means of protection at that location from the harmful effects of thermal radiation or a means of escape.

(c) Each LNG plant must be equipped with suitable first-aid material, the location of which is clearly marked and readily available to personnel.

§ 193.2513 Transfer procedures.

(a) Each transfer of LNG or other hazardous fluid must be conducted in accordance with one or more manuals of written procedures to provide for safe transfers.

(b) The transfer procedures must include provisions for personnel to:

(1) Before transfer, verify that the transfer system is ready for use, with connections and controls in proper positions, including if the system could contain a combustible mixture, verifying that it has been adequately purged in accordance with a procedure which meets the requirements of AGA ''Purging Principles and Practice.''

(2) Before transfer, verify that each receiving container or tank vehicle does not contain any substance that would be incompatible with the incoming fluid and that there is sufficient capacity available to receive the amount of fluid to be transferred;

(3) Before transfer, verify the maximum filling volume of each receiving container or tank vehicle to ensure that expansion of the incoming fluid due to warming will not result in overfilling or overpressure;

(4) When making bulk transfer of LNG into a partially filled (excluding cooldown heel) container, determine any differences in temperature or specific gravity between the LNG being transferred and the LNG already in the container and, if necessary, provide a means to prevent rollover due to stratification.

(5) Verify that the transfer operations are proceeding within design conditions and that overpressure or overfilling does not occur by monitoring applicable flow rates, liquid levels, and vapor returns.

(6) Manually terminate the flow before overfilling or overpressure occurs; and

(7) Deactivate cargo transfer systems in a safe manner by depressurizing, venting, and disconnecting lines and conducting any other appropriate operations.

(c) In addition to the requirements of paragraph (b) of this section, the procedures for cargo transfer must be located at the transfer area and include provisions for personnel to:

(1) Be in constant attendance during all cargo transfer operations;

(2) Prohibit the backing of tank trucks in the transfer area, except when a person is positioned at the rear of the truck giving instructions to the driver;

(3) Before transfer, verify that:

(i) Each tank car or tank truck complies with applicable regulations governing its use;

(ii) All transfer hoses have been visually inspected for damage and defects;

(iii) Each tank truck is properly immobilized with chock wheels, and electrically grounded; and

(iv) Each tank truck engine is shut off unless it is required for transfer operations;

(4) Prevent a tank truck engine that is off during transfer operations from being restarted until the transfer lines have been disconnected and any released vapors have dissipated;

(5) Prevent loading LNG into a tank car or tank truck that is not in exclusive LNG service or that does not contain a positive pressure if it is in exclusive LNG service, until after the oxygen content in the tank is tested and if it exceeds 2 percent by volume, purged in accordance with a procedure that meets the requirements of AGA ''Purging Principles and Practice;''

(6) Verify that all transfer lines have been disconnected and equipment cleared before the tank car or tank truck is moved from the transfer position; and

(7) Verify that transfers into a pipeline system will not exceed the pressure or temperature limits of the system.

§ 193.2515 Investigations of failures.

(a) Each operator shall investigate the cause of each explosion, fire, or LNG spill or leak which results in:

(1) Death or injury requiring hospitalization; or

(2) Property damage exceeding $10,000.

(b) As a result of the investigation, appropriate action must be taken to minimize recurrence of the incident.

(c) If the Administrator or relevant state agency under the pipeline safety laws (49 U.S.C. 60101 *et seq.*) investigates an incident, the operator involved shall make available all relevant information and provide reasonable assistance in conducting the investigation. Unless necessary to restore or maintain service, or for safety, no component involved in the incident may be moved from its location or otherwise altered until the investigation is complete or the investigating agency otherwise provides. Where components must be moved for operational or safety reasons, they must not be removed from the plant site and must be maintained intact to the extent practicable until the investigation is complete or the investigating agency otherwise provides.

[Amdt. 193–2, 45 FR 70405, Oct. 23, 1980, as amended by Amdt. 193–10, 61 FR 18517, Apr. 26, 1996]

§ 193.2517 Purging.

When necessary for safety, components that could accumulate significant amounts of combustible mixtures must be purged in accordance with a procedure which meets the provisions of the AGA ''Purging Principles and Practice'' after being taken out of service and before being returned to service.

§ 193.2519 Communication systems.

(a) Each LNG plant must have a primary communication system that provides for verbal communications between all operating personnel at their work stations in the LNG plant.

(b) Each LNG plant in excess of 70,000 gallons (265,000 liters) storage capacity must have an emergency communication system that provides for verbal communications between all persons and locations necessary for the orderly shutdown of operating equipment and the operation of safety equipment in time of emergency. The emergency communication system must be independent of and physically separated from the primary communication system and the security communication system under § 193.2909.

(c) Each communication system required by this part must have an auxiliary source of power, except sound-powered equipment.

[45 FR 9203, Feb. 11, 1980, as amended by Amdt. 193–16, 63 FR 37505, July 13, 1998]

§ 193.2521 Operating records.

Each operator shall maintain a record of results of each inspection, test and investigation required by this subpart. For each LNG facility that is designed and constructed after March 31, 2000 the operator shall also maintain related inspection, testing, and investigation records that NFPA 59A (incorporated by reference, *see* § 193.2013) requires. Such records, whether required by this part or NFPA 59A, must be kept for a period of not less than five years.

[Amdt. 193–17, 65 FR 10960, Mar. 1, 2000, as amended by Amdt. 193–18, 69 FR 11337, Mar. 10, 2004]

Subpart G—Maintenance

SOURCE: Amdt. 193–2, 45 FR 70407, Oct. 23, 1980, unless otherwise noted.

§ 193.2601 Scope.

This subpart prescribes requirements for maintaining components at LNG plants.

§ 193.2603 General.

(a) Each component in service, including its support system, must be maintained in a condition that is compatible with its operational or safety purpose by repair, replacement, or other means.

(b) An operator may not place, return, or continue in service any component which is not maintained in accordance with this subpart.

(c) Each component taken out of service must be identified in the records kept under § 193.2639.

(d) If a safety device is taken out of service for maintenance, the component being served by the device must be taken out of service unless the same safety function is provided by an alternate means.

(e) If the inadvertent operation of a component taken out of service could cause a hazardous condition, that component must have a tag attached to the controls bearing the words ''do not operate'' or words of comparable meaning.

§ 193.2605 Maintenance procedures.

(a) Each operator shall determine and perform, consistent with generally accepted engineering practice, the periodic inspections or tests needed to meet the applicable requirements of this subpart and to verify that components meet the maintenance standards prescribed by this subpart.

(b) Each operator shall follow one or more manuals of written procedures for the maintenance of each component, including any required corrosion control. The procedures must include:

(1) The details of the inspections or tests determined under paragraph (a) of this section and their frequency of performance; and

(2) A description of other actions necessary to maintain the LNG plant according to the requirements of this subpart.

(c) Each operator shall include in the manual required by paragraph (b) of this section instructions enabling personnel who perform operation and maintenance activities to recognize conditions that potentially may be safety-related conditions that are subject to the reporting requirements of § 191.23 of this subchapter.

[Amdt. 193–2, 45 FR 70407, Oct. 23, 1980, as amended by Amdt. 193–5, 53 FR 24950, July 1, 1988; 53 FR 26560, July 13, 1988; Amdt. 193–18, 69 FR 11337, Mar. 10, 2004]

§ 193.2607 Foreign material.

(a) The presence of foreign material, contaminants, or ice shall be avoided or controlled to maintain the operational safety of each component.

(b) LNG plant grounds must be free from rubbish, debris, and other material which present a fire hazard. Grass areas on the LNG plant grounds must be maintained in a manner that does not present a fire hazard.

§ 193.2609 Support systems.

Each support system or foundation of each component must be inspected for any detrimental change that could impair support.

§ 193.2611 Fire protection.

(a) Maintenance activities on fire control equipment must be scheduled so that a minimum of equipment is taken out of service at any one time and is returned to service in a reasonable period of time.

(b) Access routes for movement of fire control equipment within each LNG plant must be maintained to reasonably provide for use in all weather conditions.

§ 193.2613 Auxiliary power sources.

Each auxiliary power source must be tested monthly to check its operational capability and tested annually for capacity. The capacity test must take into account the power needed to start up and simultaneously operate equipment that would have to be served by that power source in an emergency.

§ 193.2615 Isolating and purging.

(a) Before personnel begin maintenance activities on components handling flammable fluids which are isolated for maintenance, the component must be purged in accordance with a procedure which meets the requirements of AGA ''Purging Principles and Practices,'' unless the maintenance procedures under § 193.2605 provide that the activity can be safely performed without purging.

(b) If the component or maintenance activity provides an ignition source, a technique in addition to isolation valves (such as removing spool pieces

or valves and blank flanging the piping, or double block and bleed valving) must be used to ensure that the work area is free of flammable fluids.

§ 193.2617 Repairs.

(a) Repair work on components must be performed and tested in a manner which:

(1) As far as practicable, complies with the applicable requirements of Subpart D of this part; and

(2) Assures the integrity and operational safety of the component being repaired.

(b) For repairs made while a component is operating, each operator shall include in the maintenance procedures under § 193.2605 appropriate precautions to maintain the safety of personnel and property during repair activities.

§ 193.2619 Control systems.

(a) Each control system must be properly adjusted to operate within design limits.

(b) If a control system is out of service for 30 days or more, it must be inspected and tested for operational capability before returning it to service.

(c) Control systems in service, but not normally in operation, such as relief valves and automatic shutdown devices, and control systems for internal shutoff valves for bottom penetration tanks must be inspected and tested once each calendar year, not exceeding 15 months, with the following exceptions:

(1) Control systems used seasonally, such as for liquefaction or vaporization, must be inspected and tested before use each season.

(2) Control systems that are intended for fire protection must be inspected and tested at regular intervals not to exceed 6 months.

(d) Control systems that are normally in operation, such as required by a base load system, must be inspected and tested once each calendar year but with intervals not exceeding 15 months.

(e) Relief valves must be inspected and tested for verification of the valve seat lifting pressure and reseating.

[Amdt. 193–2, 45 FR 70407, Oct. 23, 1980, as amended by Amdt. 193–17, 65 FR 10960, Mar. 1, 2000]

§ 193.2621 Testing transfer hoses.

Hoses used in LNG or flammable refrigerant transfer systems must be:

(a) Tested once each calendar year, but with intervals not exceeding 15 months, to the maximum pump pressure or relief valve setting; and

(b) Visually inspected for damage or defects before each use.

§ 193.2623 Inspecting LNG storage tanks.

Each LNG storage tank must be inspected or tested to verify that each of the following conditions does not impair the structural integrity or safety of the tank:

(a) Foundation and tank movement during normal operation and after a major meteorological or geophysical disturbance.

(b) Inner tank leakage.

(c) Effectiveness of insulation.

(d) Frost heave.

[Amdt. 193–2, 45 FR 70407, Oct. 23, 1980, as amended at 47 FR 32720, July 29, 1982]

§ 193.2625 Corrosion protection.

(a) Each operator shall determine which metallic components could, unless corrosion is controlled, have their integrity or reliability adversely affected by external, internal, or atmospheric corrosion during their intended service life.

(b) Components whose integrity or reliability could be adversely affected by corrosion must be either—

(1) Protected from corrosion in accordance with §§ 193.2627 through 193.2635, as applicable; or

(2) Inspected and replaced under a program of scheduled maintenance in accordance with procedures established under § 193.2605.

§ 193.2627 Atmospheric corrosion control.

Each exposed component that is subject to atmospheric corrosive attack must be protected from atmospheric corrosion by—

(a) Material that has been designed and selected to resist the corrosive atmosphere involved; or

(b) Suitable coating or jacketing.

§ 193.2629 External corrosion control: buried or submerged components.

(a) Each buried or submerged component that is subject to external corrosive attack must be protected from external corrosion by—

(1) Material that has been designed and selected to resist the corrosive environment involved; or

(2) The following means:

(i) An external protective coating designed and installed to prevent corrosion attack and to meet the requirements of § 192.461 of this chapter; and

(ii) A cathodic protection system designed to protect components in their entirety in accordance with the requirements of § 192.463 of this chapter and placed in operation before October 23, 1981, or within 1 year after the component is constructed or installed, whichever is later.

(b) Where cathodic protection is applied, components that are electrically interconnected must be protected as a unit.

[Amdt. 193–2, 45 FR 70407, Oct. 23, 1980, as amended at 47 FR 32720, July 29, 1982]

§ 193.2631 Internal corrosion control.

Each component that is subject to internal corrosive attack must be protected from internal corrosion by—

(a) Material that has been designed and selected to resist the corrosive fluid involved; or

(b) Suitable coating, inhibitor, or other means.

§ 193.2633 Interference currents.

(a) Each component that is subject to electrical current interference must be protected by a continuing program to minimize the detrimental effects of currents.

(b) Each cathodic protection system must be designed and installed so as to minimize any adverse effects it might cause to adjacent metal components.

(c) Each impressed current power source must be installed and maintained to prevent adverse interference with communications and control systems.

§ 193.2635 Monitoring corrosion control.

Corrosion protection provided as required by this subpart must be periodically monitored to give early recognition of ineffective corrosion protection, including the following, as applicable:

(a) Each buried or submerged component under cathodic protection must be tested at least once each calendar year, but with intervals not exceeding 15 months, to determine whether the cathodic protection meets the requirements of § 192.463 of this chapter.

(b) Each cathodic protection rectifier or other impressed current power source must be inspected at least 6 times each calendar year, but with intervals not exceeding 2½ months, to ensure that it is operating properly.

(c) Each reverse current switch, each diode, and each interference bond whose failure would jeopardize component protection must be electrically checked for proper performance at least 6 times each calendar year, but with intervals not exceeding 2½ months. Each other interference bond must be checked at least once each calendar year, but with intervals not exceeding 15 months.

(d) Each component that is protected from atmospheric corrosion must be inspected at intervals not exceeding 3 years.

(e) If a component is protected from internal corrosion, monitoring devices designed to detect internal corrosion, such as coupons or probes, must be located where corrosion is most likely to occur. However, monitoring is not required for corrosion resistant materials if the operator can demonstrate that the component will not be adversely affected by internal corrosion during its service life. Internal corrosion control monitoring devices must be checked at least two times each calendar year, but with intervals not exceeding 7½ months.

§ 193.2637 Remedial measures.

Prompt corrective or remedial action must be taken whenever an operator learns by inspection or otherwise that atmospheric, external, or internal corrosion is not controlled as required by this subpart.

§ 193.2639 Maintenance records.

(a) Each operator shall keep a record at each LNG plant of the date and type of each maintenance activity performed on each component to meet the requirements of this part. For each LNG facility that is designed and constructed after March 31, 2000 the operator shall also maintain related periodic inspection and testing records that NFPA 59A (incorporated by reference, *see* § 193.2013) requires. Maintenance records, whether required by this part or NFPA 59A, must be kept for a period of not less than five years.

(b) Each operator shall maintain records or maps to show the location of cathodically protected components, neighboring structures bonded to the cathodic protection system, and corrosion protection equipment.

(c) Each of the following records must be retained for as long as the LNG facility remains in service:

(1) Each record or map required by paragraph (b) of this section.

(2) Records of each test, survey, or inspection required by this subpart in sufficient detail to demonstrate the adequacy of corrosion control measures.

[Amdt. 193–2, 45 FR 70407, Oct. 23, 1980, as amended by Amdt. 193–17, 65 FR 10960, Mar. 1, 2000; Amdt. 193–18, 69 FR 11337, Mar. 10, 2004]

Subpart H—Personnel Qualifications and Training

SOURCE: Sections 193.2707 through 193.2719 appear at Amdt. 193–2, 45 FR 70404, Oct. 23, 1980 , unless otherwise noted.

§ 193.2701 Scope.

This subpart prescribes requirements for personnel qualifications and training.

[45 FR 9219, Feb. 11, 1980]

§ 193.2703 Design and fabrication.

For the design and fabrication of components, each operator shall use—

(a) With respect to design, persons who have demonstrated competence by training or experience in the design of comparable components.

(b) With respect to fabrication, persons who have demonstrated competence by training or experience in the fabrication of comparable components.

[45 FR 9219, Feb. 11, 1980]

§ 193.2705 Construction, installation, inspection, and testing.

(a) Supervisors and other personnel utilized for construction, installation, inspection, or testing must have demonstrated their capability to perform satisfactorily the assigned function by appropriate training in the methods and equipment to be used or related experience and accomplishments.

(b) Each operator must periodically determine whether inspectors performing construction, installation, and testing duties required by this part are satisfactorily performing their assigned functions.

[45 FR 9219, Feb. 11, 1980, as amended by Amdt. 193–18, 69 FR 11337, Mar. 10, 2004]

§ 193.2707 Operations and maintenance.

(a) Each operator shall utilize for operation or maintenance of components only those personnel who have demonstrated their capability to perform their assigned functions by—

(1) Successful completion of the training required by §§ 193.2713 and 193.2717; and

(2) Experience related to the assigned operation or maintenance function; and

(3) Acceptable performance on a proficiency test relevant to the assigned function.

(b) A person who does not meet the requirements of paragraph (a) of this section may operate or maintain a component when accompanied and directed by an individual who meets the requirements.

(c) Corrosion control procedures under § 193.2605(b), including those for the design, installation, operation, and maintenance of cathodic protection systems, must be carried out by, or under the direction of, a person qualified by experience and training in corrosion control technology.

§ 193.2709 Security.

Personnel having security duties must be qualified to perform their assigned duties by successful completion of the training required under § 193.2715.

§ 193.2711 Personnel health.

Each operator shall follow a written plan to verify that personnel assigned operating, maintenance, security, or fire protection duties at the LNG plant do not have any physical condition that would impair performance of their assigned duties. The plan must be designed to detect both readily observable disorders, such as physical handicaps or injury, and conditions requiring professional examination for discovery.

§ 193.2713 Training: operations and maintenance.

(a) Each operator shall provide and implement a written plan of initial training to instruct—

(1) All permanent maintenance, operating, and supervisory personnel—

(i) About the characteristics and hazards of LNG and other flammable fluids used or handled at the facility, including, with regard to LNG, low temperatures, flammability of mixtures with air, odorless vapor, boiloff characteristics, and reaction to water and water spray;

(ii) About the potential hazards involved in operating and maintenance activities; and

(iii) To carry out aspects of the operating and maintenance procedures under §§ 193.2503 and 193.2605 that relate to their assigned functions; and

(2) All personnel—

(i) To carry out the emergency procedures under § 193.2509 that relate to their assigned functions; and

(ii) To give first-aid; and

(3) All operating and appropriate supervisory personnel—

(i) To understand detailed instructions on the facility operations, including controls, functions, and operating procedures; and

(ii) To understand the LNG transfer procedures provided under § 193.2513.

(b) A written plan of continuing instruction must be conducted at intervals of not more than two years to keep all personnel current on the knowledge and skills they gained in the program of initial instruction.

§ 193.2715 Training: security.

(a) Personnel responsible for security at an LNG plant must be trained in accordance with a written plan of initial instruction to:

(1) Recognize breaches of security;

(2) Carry out the security procedures under § 193.2903 that relate to their assigned duties;

(3) Be familiar with basic plant operations and emergency procedures, as necessary to effectively perform their assigned duties; and

(4) Recognize conditions where security assistance is needed.

(b) A written plan of continuing instruction must be conducted at intervals of not more than two years to keep all personnel having security duties current on the knowledge and skills they gained in the program of initial instruction.

§ 193.2717 Training: fire protection.

(a) All personnel involved in maintenance and operations of an LNG plant, including their immediate supervisors, must be trained according to a written plan of initial instruction, including plant fire drills, to:

(1) Know the potential causes and areas of fire;

(2) Know the types, sizes, and predictable consequences of fire; and

(3) Know and be able to perform their assigned fire control duties according to the procedures established under § 193.2509 and by proper use of equipment provided under § 193.2801.

(b) A written plan of continuing instruction, including plant fire drills, must be conducted at intervals of not more than two years to keep personnel current on the knowledge and skills they gained in the instruction under paragraph (a) of the section.

(c) Plant fire drills must provide personnel hands-on experience in carrying out their duties under the fire emergency procedures required by § 193.2509.

[Amdt. 193–2, 45 FR 70404, Oct. 23, 1980, as amended by Amdt. 193–18, 69 FR 11337, Mar. 10, 2004]

§ 193.2719 Training: records.

(a) Each operator shall maintain a system of records which—

(1) Provide evidence that the training programs required by this subpart have been implemented; and

(2) Provide evidence that personnel have undergone and satisfactorily completed the required training programs.

(b) Records must be maintained for one year after personnel are no longer assigned duties at the LNG plant.

Subpart I—Fire Protection

SOURCE: Amdt. 193–2, 45 FR 70408, Oct. 23, 1980, unless otherwise noted.

§ 193.2801 Fire protection.

Each operator must provide and maintain fire protection at LNG plants according to sections 9.1 through 9.7 and section 9.9 of NFPA 59A (incorporated by reference, *see* § 193.2013). However, LNG plants existing on March 31, 2000, need not comply with provisions on emergency shutdown systems, water delivery systems, detection systems, and personnel qualification and training until September 12, 2005.

[Amdt. 193–18, 69 FR 11337, Mar. 10, 2004]

§§ 193.2803–193.2821 [Reserved]

Subpart J—Security

SOURCE: Amdt. 193–2, 45 FR 70409, Oct. 23, 1980, unless otherwise noted.

§ 193.2901 Scope.

This subpart prescribes requirements for security at LNG plants. However, the requirements do not apply to existing LNG plants that do not contain LNG.

[Amdt. 193–4, 52 FR 675, Jan. 8, 1987]

§ 193.2903 Security procedures.

Each operator shall prepare and follow one or more manuals of written procedures to provide security for each LNG plant. The procedures must be available at the plant in accordance with § 193.2017 and include at least:

(a) A description and schedule of security inspections and patrols performed in accordance with § 193.2913;

(b) A list of security personnel positions or responsibilities utilized at the LNG plant;

(c) A brief description of the duties associated with each security personnel position or responsibility;

(d) Instructions for actions to be taken, including notification of other appropriate plant personnel and law enforcement officials, when there is any indication of an actual or attempted breach of security;

(e) Methods for determining which persons are allowed access to the LNG plant;

(f) Positive identification of all persons entering the plant and on the plant, including methods at least as effective as picture badges; and

(g) Liaison with local law enforcement officials to keep them informed about current security procedures under this section.

§ 193.2905 Protective enclosures.

(a) The following facilities must be surrounded by a protective enclosure:

(1) Storage tanks;

(2) Impounding systems;

(3) Vapor barriers;

(4) Cargo transfer systems;

(5) Process, liquefaction, and vaporization equipment;

(6) Control rooms and stations;

(7) Control systems;

(8) Fire control equipment;

(9) Security communications systems; and

(10) Alternative power sources.

The protective enclosure may be one or more separate enclosures surrounding a single facility or multiple facilities.

(b) Ground elevations outside a protective enclosure must be graded in a manner that does not impair the effectiveness of the enclosure.

(c) Protective enclosures may not be located near features outside of the facility, such as trees, poles, or buildings, which could be used to breach the security.

(d) At least two accesses must be provided in each protective enclosure and be located to minimize the escape distance in the event of emergency.

(e) Each access must be locked unless it is continuously guarded. During normal operations, an access may be unlocked only by persons designated in writing by the operator. During an emergency, a means must be readily available to all facility personnel within the protective enclosure to open each access.

§ 193.2907 Protective enclosure construction.

(a) Each protective enclosure must have sufficient strength and configuration to obstruct unauthorized access to the facilities enclosed.

(b) Openings in or under protective enclosures must be secured by grates, doors or covers of construction and fastening of sufficient strength such that the integrity of the protective enclosure is not reduced by any opening.

[Amdt. 193–2, 45 FR 70409, Oct. 23, 1980, as amended by Amdt. 193–12, 61 FR 27793, June 3, 1996; 61 FR 45905, Aug. 30, 1996]

§ 193.2909 Security communications.

A means must be provided for:

(a) Prompt communications between personnel having supervisory security duties and law enforcement officials; and

(b) Direct communications between all on-duty personnel having security duties and all control rooms and control stations.

§ 193.2911 Security lighting.

Where security warning systems are not provided for security monitoring under § 193.2913, the area around the facilities listed under § 193.2905(a) and each protective enclosure must be illuminated with a minimum in service lighting intensity of not less than 2.2 lux (0.2 ft^c) between sunset and sunrise.

§ 193.2913 Security monitoring.

Each protective enclosure and the area around each facility listed in § 193.2905(a) must be monitored for the presence of unauthorized persons. Monitoring must be by visual observation in accordance with the schedule in the security procedures under § 193.2903(a) or by security warning systems that continuously transmit data to an attended location. At an LNG plant with less than 40,000 m^3 (250,000 bbl) of storage capacity, only the protective enclosure must be monitored.

§ 193.2915 Alternative power sources.

An alternative source of power that meets the requirements of § 193.2445 must be provided for security lighting and security monitoring and warning systems required under §§ 193.2911 and 193.2913.

§ 193.2917 Warning signs.

(a) Warning signs must be conspicuously placed along each protective enclosure at intervals so that at least one sign is recognizable at night from a distance of 30m (100 ft.) from any way that could reasonably be used to approach the enclosure.

(b) Signs must be marked with at least the following on a background of sharply contrasting color:

The words ''NO TRESPASSING,'' or words of comparable meaning.

[Amdt. 193–2, 45 FR 70409, Oct. 23, 1980, as amended at 47 FR 32720, July 29, 1982]

PART 194—RESPONSE PLANS FOR ONSHORE OIL PIPELINES

Subpart A—General

Sec.
194.1 Purpose.
194.3 Applicability.
194.5 Definitions.
194.7 Operating restrictions and interim operating authorization.

Subpart B—Response Plans

194.101 Operators required to submit plans.
194.103 Significant and substantial harm; operator's statement.
194.105 Worst case discharge.
194.107 General response plan requirements.
194.109 Submission of state response plans.
194.111 Response plan retention.
194.113 Information summary.
194.115 Response resources.
194.117 Training.
194.119 Submission and approval procedures.
194.121 Response plan review and update procedures.

APPENDIX A TO PART 194—GUIDELINES FOR THE PREPARATION OF RESPONSE PLANS

APPENDIX B TO PART 194—HIGH VOLUME AREAS

AUTHORITY: 33 U.S.C. 1231, 1321(j)(1)(C), (j)(5) and (j)(6); sec. 2, E.O. 12777, 56 FR 54757, 3 CFR, 1991 Comp., p. 351; 49 CFR 1.53.

SOURCE: 58 FR 253, Jan. 5, 1993, unless otherwise noted.

Subpart A—General

§ 194.1 Purpose.

This part contains requirements for oil spill response plans to reduce the environmental impact of oil discharged from onshore oil pipelines.

§ 194.3 Applicability.

This part applies to an operator of an onshore oil pipeline that, because of its location, could reasonably be expected to cause substantial harm, or significant and substantial harm to the environment by discharging oil into or on any navigable waters of the United States or adjoining shorelines.

§ 194.5 Definitions.

Adverse weather means the weather conditions that the operator will consider when identifying response systems and equipment to be deployed in accordance with a response plan. Factors to consider include ice conditions, temperature ranges, weather-related visibility, significant wave height as specified in 33 CFR Part 154, Appendix C, Table 1, and currents within the areas in which those systems or equipment are intended to function.

Barrel means 42 United States gallons (159 liters) at 60 °Fahrenheit (15.6 °Celsius).

Breakout tank means a tank used to:

(1) Relieve surges in an oil pipeline system or

(2) Receive and store oil transported by a pipeline for reinjection and continued transportation by pipeline.

Contract or other approved means is:

(1) A written contract or other legally binding agreement between the operator and a response contractor or other spill response organization identifying and ensuring the availability of the specified personnel and equipment within stipulated response times for a specified geographic area;

(2) Certification that specified equipment is owned or operated by the pipeline operator, and operator personnel and equipment are available within stipulated response times for a specified geographic area; or

(3) Active membership in a local or regional oil spill removal organization that has identified specified personnel and equipment to be available within stipulated response times for a specified geographic area.

Environmentally sensitive area means an area of environmental importance which is in or adjacent to navigable waters.

High volume area means an area which an oil pipeline having a nominal outside diameter of 20 inches (508 millimeters) or more crosses a major river or other navigable waters, which, because of the velocity of the river flow and vessel traffic on the river, would require a more rapid response in case of a worst case discharge or substantial threat of such a discharge. Appendix B to this part contains a list of some of the high volume areas in the United States.

Line section means a continuous run of pipe that is contained between adjacent pressure pump stations, between a pressure pump station and a terminal or breakout tank, between a pressure pump station and a block valve, or between adjacent block valves.

Major river means a river that, because of its velocity and vessel traffic, would require a more rapid response in case of a worst case discharge. For a list of rivers see ''*Rolling Rivers, An Encyclopedia of America's Rivers,*'' Richard A. Bartlett, Editor, McGraw-Hill Book Company, 1984.

Maximum extent practicable means the limits of available technology and the practical and technical limits on a pipeline operator in planning the response resources required to provide the on-water recovery capability and the shoreline protection and cleanup capability to conduct response activities for a worst case discharge from a pipeline in adverse weather.

Navigable waters means the waters of the United States, including the territorial sea and such waters as lakes, rivers, streams; waters which are used for recreation; and waters from which fish or shellfish are taken and sold in interstate or foreign commerce.

Oil means oil of any kind or in any form, including, but not limited to, petroleum, fuel oil, vegetable oil, animal

oil, sludge, oil refuse, oil mixed with wastes other than dredged spoil.

Oil spill removal organization means an entity that provides response resources.

On-Scene Coordinator (OSC) means the federal official designated by the Administrator of the EPA or by the Commandant of the USCG to coordinate and direct federal response under subpart D of the National Contingency Plan (40 CFR part 300).

Onshore oil pipeline facilities means new and existing pipe, rights-of-way and any equipment, facility, or building used in the transportation of oil located in, on, or under, any land within the United States other than submerged land.

Operator means a person who owns or operates onshore oil pipeline facilities.

Pipeline means all parts of an onshore pipeline facility through which oil moves including, but not limited to, line pipe, valves, and other appurtenances connected to line pipe, pumping units, fabricated assemblies associated with pumping units, metering and delivery stations and fabricated assemblies therein, and breakout tanks.

Qualified individual means an English-speaking representative of an operator, located in the United States, available on a 24-hour basis, with full authority to: activate and contract with required oil spill removal organization(s); activate personnel and equipment maintained by the operator; act as liaison with the OSC; and obligate any funds required to carry out all required or directed oil response activities.

Response activities means the containment and removal of oil from the water and shorelines, the temporary storage and disposal of recovered oil, or the taking of other actions as necessary to minimize or mitigate damage to the environment.

Response plan means the operator's core plan and the response zone appendices for responding, to the maximum extent practicable, to a worse case discharge of oil, or the substantial threat of such a discharge.

Response resources means the personnel, equipment, supplies, and other resources necessary to conduct response activities.

Response zone means a geographic area either along a length of pipeline or including multiple pipelines, containing one or more adjacent line sections, for which the operator must plan for the deployment of, and provide, spill response capabilities. The size of the zone is determined by the operator after considering available capability, resources, and geographic characteristics.

Specified minimum yield strength means the minimum yield strength, expressed in pounds per square inch, prescribed by the specification under which the material is purchased from the manufacturer.

Stress level means the level of tangential or hoop stress, usually expressed as a percentage of specified minimum yield strength.

Worst case discharge means the largest foreseeable discharge of oil, including a discharge from fire or explosion, in adverse weather conditions. This volume will be determined by each pipeline operator for each response zone and is calculated according to § 194.105.

[58 FR 253, Jan. 5, 1993, as amended by Amdt. 194–3, 63 FR 37505, July 13, 1998; Amdt. 194–4, 70 FR 8746, Feb. 23, 2005]

§ 194.7 Operating restrictions and interim operating authorization.

(a) An operator of a pipeline for which a response plan is required under § 194.101, may not handle, store, or transport oil in that pipeline unless the operator has submitted a response plan meeting the requirements of this part.

(b) An operator must operate its onshore pipeline facilities in accordance with the applicable response plan.

(c) The operator of a pipeline line section described in § 194.103(c), may continue to operate the pipeline for two years after the date of submission of a response plan, pending approval or disapproval of that plan, only if the operator has submitted the certification required by § 194.119(e).

[Amdt. 194–4, 70 FR 8746, Feb. 23, 2005]

Subpart B—Response Plans

§ 194.101 Operators required to submit plans.

(a) Except as provided in paragraph (b) of this section, unless OPS grants a request from an Federal On-Scene Coordinator (FOSC) to require an operator of a pipeline in paragraph (b) to submit a response plan, each operator of an onshore pipeline facility shall prepare and submit a response plan to PHMSA as provided in § 194.119. A pipeline which does not meet the criteria for significant and substantial harm as defined in § 194.103(c) and is not eligible for an exception under § 194.101(b), can be expected to cause substantial harm. Operators of substantial harm pipeline facilities must prepare and submit plans to PHMSA for review.

(b) *Exception*. An operator need not submit a response plan for:

(1) A pipeline that is 6⅝ inches (168 millimeters) or less in outside nominal diameter, is 10 miles (16 kilometers) or less in length, and all of the following conditions apply to the pipeline:

(i) The pipeline has not experienced a release greater than 1,000 barrels (159 cubic meters) within the previous five years,

(ii) The pipeline has not experienced at least two reportable releases, as defined in § 195.50, within the previous five years,

(iii) A pipeline containing any electric resistance welded pipe, manufactured prior to 1970, does not operate at a maximum operating pressure established under § 195.406 that corresponds to a stress level greater than 50 percent of the specified minimum yield strength of the pipe, and

(iv) The pipeline is not in proximity to navigable waters, public drinking water intakes, or environmentally sensitive areas.

(2)(i) A line section that is greater than 6⅝ inches in outside nominal diameter and is greater than 10 miles in length, where the operator determines that it is unlikely that the worst case discharge from any point on the line section would adversely affect, within 12 hours after the initiation of the discharge, any navigable waters, public drinking water intake, or environmentally sensitive areas.

(ii) A line section that is 6⅝ inches (168 millimeters) or less in outside nominal diameter and is 10 miles (16 kilometers) or less in length, where the operator determines that it is unlikely that the worst case discharge from any point on the line section would adversely affect, within 4 hours after the initiation of the discharge, any navigable waters, public drinking water intake, or environmentally sensitive areas.

[58 FR 253, Jan. 5, 1993, as amended by Amdt. 194–3, 63 FR 37505, July 13, 1998; Amdt. 194–4, 70 FR 8747, Feb. 23, 2005; 70 FR 11140, Mar. 8, 2005]

§ 194.103 Significant and substantial harm; operator's statement.

(a) Each operator shall submit a statement with its response plan, as required by §§ 194.107 and 194.113, identifying which line sections in a response zone can be expected to cause significant and substantial harm to the environment in the event of a discharge of oil into or on the navigable waters or adjoining shorelines.

(b) If an operator expects a line section in a response zone to cause significant and substantial harm, then the entire response zone must, for the purpose of response plan review and approval, be treated as if it is expected to cause significant and substantial harm. However, an operator will not have to submit separate plans for each line section.

(c) A line section can be expected to cause significant and substantial harm to the environment in the event of a discharge of oil into or on the navigable waters or adjoining shorelines if; the pipeline is greater than 6⅝ inches (168 millimeters) in outside nominal diameter, greater than 10 miles (16 kilometers) in length, and the line section—

(1) Has experienced a release greater than 1,000 barrels (159 cubic meters) within the previous five years,

(2) Has experienced two or more reportable releases, as defined in § 195.50, within the previous five years,

(3) Containing any electric resistance welded pipe, manufactured prior to 1970, operates at a maximum operating pressure established under § 195.406 that corresponds to a stress level greater

than 50 percent of the specified minimum yield strength of the pipe,

(4) Is located within a 5 mile (8 kilometer) radius of potentially affected public drinking water intakes and could reasonably be expected to reach public drinking water intakes, or

(5) Is located within a 1 mile (1.6 kilometer) radius of potentially affected environmentally sensitive areas, and could reasonably be expected to reach these areas.

[58 FR 253, Jan. 5, 1993, as amended by Amdt. 194–3, 63 FR 37505, July 13, 1998]

§ 194.105 Worst case discharge.

(a) Each operator shall determine the worst case discharge for each of its response zones and provide the methodology, including calculations, used to arrive at the volume.

(b) The worst case discharge is the largest volume, in barrels (cubic meters), of the following:

(1) The pipeline's maximum release time in hours, plus the maximum shutdown response time in hours (based on historic discharge data or in the absence of such historic data, the operator's best estimate), multiplied by the maximum flow rate expressed in barrels per hour (based on the maximum daily capacity of the pipeline), plus the largest line drainage volume after shutdown of the line section(s) in the response zone expressed in barrels (cubic meters); or

(2) The largest foreseeable discharge for the line section(s) within a response zone, expressed in barrels (cubic meters), based on the maximum historic discharge, if one exists, adjusted for any subsequent corrective or preventive action taken; or

(3) If the response zone contains one or more breakout tanks, the capacity of the single largest tank or battery of tanks within a single secondary containment system, adjusted for the capacity or size of the secondary containment system, expressed in barrels (cubic meters).

(4) Operators may claim prevention credits for breakout tank secondary containment and other specific spill prevention measures as follows:

Prevention measure	Standard	Credit (percent)
Secondary containment >100%	NFPA 30	50
Built/repaired to API standards	API STD 620/650/653.	10
Overfill protection standards	API RP 2350	5
Testing/cathodic protection	API STD 650/651/653.	5
Tertiary containment/drainage/treatment	NFPA 30	5
Maximum allowable credit		75

[58 FR 253, Jan. 5, 1993, as amended by Amdt. 194–3, 63 FR 37505, July 13, 1998; Amdt. 194–4, 70 FR 8747, Feb. 23, 2005; Amdt. 194–5, 70 FR 35042, June 16, 2005]

§ 194.107 General response plan requirements.

(a) Each response plan must include procedures and a list of resources for responding, to the maximum extent practicable, to a worst case discharge and to a substantial threat of such a discharge. The ''substantial threat'' term is equivalent to abnormal operations outlined in 49 CFR 195.402(d). To comply with this requirement, an operator can incorporate by reference into the response plan the appropriate procedures from its manual for operations, maintenance, and emergencies, which is prepared in compliance with 49 CFR 195.402.

(b) An operator must certify in the response plan that it reviewed the NCP and each applicable ACP and that its response plan is consistent with the NCP and each applicable ACP as follows:

(1) As a minimum to be consistent with the NCP a facility response plan must:

(i) Demonstrate an operator's clear understanding of the function of the Federal response structure, including procedures to notify the National Response Center reflecting the relationship between the operator's response organization's role and the Federal On

Scene Coordinator's role in pollution response;

(ii) Establish provisions to ensure the protection of safety at the response site; and

(iii) Identify the procedures to obtain any required Federal and State permissions for using alternative response strategies such as in-situ burning and dispersants as provided for in the applicable ACPs; and

(2) As a minimum, to be consistent with the applicable ACP the plan must:

(i) Address the removal of a worst case discharge and the mitigation or prevention of a substantial threat of a worst case discharge;

(ii) Identify environmentally and economically sensitive areas;

(iii) Describe the responsibilities of the operator and of Federal, State and local agencies in removing a discharge and in mitigating or preventing a substantial threat of a discharge; and

(iv) Establish the procedures for obtaining an expedited decision on use of dispersants or other chemicals.

(c) Each response plan must include:

(1) A core plan consisting of—

(i) An information summary as required in § 194.113,

(ii) Immediate notification procedures,

(iii) Spill detection and mitigation procedures,

(iv) The name, address, and telephone number of the oil spill response organization, if appropriate,

(v) Response activities and response resources,

(vi) Names and telephone numbers of Federal, State and local agencies which the operator expects to have pollution control responsibilities or support,

(vii) Training procedures,

(viii) Equipment testing,

(ix) Drill program—an operator will satisfy the requirement for a drill program by following the National Preparedness for Response Exercise Program (PREP) guidelines. An operator choosing not to follow PREP guidelines must have a drill program that is equivalent to PREP. The operator must describe the drill program in the response plan and OPS will determine if the program is equivalent to PREP.

(x) Plan review and update procedures;

(2) An appendix for each response zone that includes the information required in paragraph (c)(1)(i)–(ix) of this section and the worst case discharge calculations that are specific to that response zone. An operator submitting a response plan for a single response zone does not need to have a core plan and a response zone appendix. The operator of a single response zone onshore pipeline shall have a single summary in the plan that contains the required information in § 194.113.7; and

(3) A description of the operator's response management system including the functional areas of finance, logistics, operations, planning, and command. The plan must demonstrate that the operator's response management system uses common terminology and has a manageable span of control, a clearly defined chain of command, and sufficient trained personnel to fill each position.

[Amdt. 194–4, 70 FR 8747, Feb. 23, 2005]

§ 194.109 Submission of state response plans.

(a) In lieu of submitting a response plan required by § 194.103, an operator may submit a response plan that complies with a state law or regulation, if the state law or regulation requires a plan that provides equivalent or greater spill protection than a plan required under this part.

(b) A plan submitted under this section must

(1) Have an information summary required by § 194.113;

(2) List the names or titles and 24-hour telephone numbers of the qualified individual(s) and at least one alternate qualified individual(s); and

(3) Ensure through contract or other approved means the necessary private personnel and equipment to respond to a worst case discharge or a substantial threat of such a discharge.

[58 FR 253, Jan. 5, 1993, as amended by Amdt. 194–4, 70 FR 8748, Feb. 23, 2005]

§ 194.111 Response plan retention.

(a) Each operator shall maintain relevant portions of its response plan at the operator's headquarters and at

other locations from which response activities may be conducted, for example, in field offices, supervisors' vehicles, or spill response trailers.

(b) Each operator shall provide a copy of its response plan to each qualified individual.

[58 FR 253, Jan. 5, 1993, as amended by Amdt. 194–4, 70 FR 8748, Feb. 23, 2005]

§ 194.113 Information summary.

(a) The information summary for the core plan, required by § 194.107, must include:

(1) The name and address of the operator; and

(2) For each response zone which contains one or more line sections that meet the criteria for determining significant and substantial harm as described in § 194.103, a listing and description of the response zones, including county(s) and state(s).

(b) The information summary for the response zone appendix, required in § 194.107, must include:

(1) The information summary for the core plan;

(2) The names or titles and 24-hour telephone numbers of the qualified individual(s) and at least one alternate qualified individual(s);

(3) The description of the response zone, including county(s) and state(s), for those zones in which a worst case discharge could cause substantial harm to the environment;

(4) A list of line sections for each pipeline contained in the response zone, identified by milepost or survey station number, or other operator designation;

(5) The basis for the operator's determination of significant and substantial harm; and

(6) The type of oil and volume of the worst case discharge.

[58 FR 253, Jan. 5, 1993, as amended by Amdt. 194–4, 70 FR 8748, Feb. 23, 2005]

§ 194.115 Response resources.

(a) Each operator shall identify and ensure, by contract or other approved means, the resources necessary to remove, to the maximum extent practicable, a worst case discharge and to mitigate or prevent a substantial threat of a worst case discharge.

(b) An operator shall identify in the response plan the response resources which are available to respond within the time specified, after discovery of a worst case discharge, or to mitigate the substantial threat of such a discharge, as follows:

	Tier 1	Tier 2	Tier 3
High volume area	6 hrs	30 hrs	54 hrs.
All other areas	12 hrs	36 hrs	60 hrs.

§ 194.117 Training.

(a) Each operator shall conduct training to ensure that:

(1) All personnel know—

(i) Their responsibilities under the response plan,

(ii) The name and address of, and the procedure for contacting, the operator on a 24-hour basis, and

(iii) The name of, and procedures for contacting, the qualified individual on a 24-hour basis;

(2) Reporting personnel know—

(i) The content of the information summary of the response plan,

(ii) The toll-free telephone number of the National Response Center, and

(iii) The notification process; and

(3) Personnel engaged in response activities know—

(i) The characteristics and hazards of the oil discharged,

(ii) The conditions that are likely to worsen emergencies, including the consequences of facility malfunctions or failures, and the appropriate corrective actions,

(iii) The steps necessary to control any accidental discharge of oil and to minimize the potential for fire, explosion, toxicity, or environmental damage, and

(iv) The proper firefighting procedures and use of equipment, fire suits, and breathing apparatus.

(b) Each operator shall maintain a training record for each individual that has been trained as required by this section. These records must be maintained in the following manner as long as the individual is assigned duties under the response plan:

(1) Records for operator personnel must be maintained at the operator's headquarters; and

(2) Records for personnel engaged in response, other than operator personnel, shall be maintained as determined by the operator.

(c) Nothing in this section relieves an operator from the responsibility to ensure that all response personnel are trained to meet the Occupational Safety and Health Administration (OSHA) standards for emergency response operations in 29 CFR 1910.120, including volunteers or casual laborers employed during a response who are subject to those standards pursuant to 40 CFR part 311.

§ 194.119 Submission and approval procedures.

(a) Each operator shall submit two copies of the response plan required by this part. Copies of the response plan shall be submitted to: Office of Pipeline Safety, Pipeline and Hazardous Materials Safety Administration, Department of Transportation, PHP 80, 1200 New Jersey Avenue, SE., Washington, DC 20590–0001. Note: Submission of plans in electronic format is preferred.

(b) If PHMSA determines that a response plan requiring approval does not meet all the requirements of this part, PHMSA will notify the operator of any alleged deficiencies, and to provide the operator an opportunity to respond, including the opportunity for an informal conference, on any proposed plan revisions and an opportunity to correct any deficiencies.

(c) An operator who disagrees with the PHMSA determination that a plan contains alleged deficiencies may petition PHMSA for reconsideration within 30 days from the date of receipt of PHMSA's notice. After considering all relevant material presented in writing or at an informal conference, PHMSA will notify the operator of its final decision. The operator must comply with the final decision within 30 days of issuance unless PHMSA allows additional time.

(d) For response zones of pipelines described in § 194.103(c) OPS will approve the response plan if OPS determines that the response plan meets all requirements of this part. OPS may consult with the U.S. Environmental Protection Agency (EPA) or the U.S. Coast Guard (USCG) if a Federal on-scene coordinator (FOSC) has concerns about the operator's ability to respond to a worst case discharge.

(e) If OPS has not approved a response plan for a pipeline described in § 194.103(c), the operator may submit a certification to OPS that the operator has obtained, through contract or other approved means, the necessary personnel and equipment to respond, to the maximum extent practicable, to a worst case discharge or a substantial threat of such a discharge. The certificate must be signed by the qualified individual or an appropriate corporate officer.

(f) If OPS receives a request from a FOSC to review a response plan, OPS may require an operator to give a copy of the response plan to the FOSC. OPS may consider FOSC comments on response techniques, protecting fish, wildlife and sensitive environments, and on consistency with the ACP. OPS remains the approving authority for the response plan.

[58 FR 253, Jan. 5, 1993, as amended byAmdt. 194–4, 70 FR 8748, Feb. 23, 2005; 70 FR 1140, Mar. 8, 2005; 73 FR 16570, Mar. 28, 2008; 74 FR 2894, Jan. 16, 2009]

§ 194.121 Response plan review and update procedures.

(a) Each operator shall update its response plan to address new or different operating conditions or information. In addition, each operator shall review its response plan in full at least every 5 years from the date of the last submission or the last approval as follows:

(1) For substantial harm plans, an operator shall resubmit its response plan to OPS every 5 years from the last submission date.

(2) For significant and substantial harm plans, an operator shall resubmit every 5 years from the last approval date.

(b) If a new or different operating condition or information would substantially affect the implementation of a response plan, the operator must immediately modify its response plan to address such a change and, within 30 days of making such a change, submit the change to PHMSA. Examples of changes in operating conditions that

would cause a significant change to an operator's response plan are:

(1) An extension of the existing pipeline or construction of a new pipeline in a response zone not covered by the previously approved plan;

(2) Relocation or replacement of the pipeline in a way that substantially affects the information included in the response plan, such as a change to the worst case discharge volume;

(3) The type of oil transported, if the type affects the required response resources, such as a change from crude oil to gasoline;

(4) The name of the oil spill removal organization;

(5) Emergency response procedures;

(6) The qualified individual;

(7) A change in the NCP or an ACP that has significant impact on the equipment appropriate for response activities; and

(8) Any other information relating to circumstances that may affect full implementation of the plan.

(c) If PHMSA determines that a change to a response plan does not meet the requirements of this part, PHMSA will notify the operator of any alleged deficiencies, and provide the operator an opportunity to respond, including an opportunity for an informal conference, to any proposed plan revisions and an opportunity to correct any deficiencies.

(d) An operator who disagrees with a determination that proposed revisions to a plan are deficient may petition PHMSA for reconsideration, within 30 days from the date of receipt of PHMSA's notice. After considering all relevant material presented in writing or at the conference, PHMSA will notify the operator of its final decision. The operator must comply with the final decision within 30 days of issuance unless PHMSA allows additional time.

[58 FR 253, Jan. 5, 1993, as amended by Amdt. 194–1, 62 FR 67293, Dec. 24, 1997; Amdt. 194–4, 70 FR 8748, Feb. 23, 2005; 70 FR 11140, Mar. 8, 2005]

APPENDIX A TO PART 194—GUIDELINES FOR THE PREPARATION OF RESPONSE PLANS

This appendix provides a recommended format for the preparation and submission of the response plans required by 49 CFR Part 194. Operators are referenced to the most current version of the guidance documents listed below. Although these documents contain guidance to assist in preparing response plans, their use is not mandatory:

(1) The ''National Preparedness for Response Exercise Program (PREP) Guidelines'' (PREP), which can be found using the search function on the USCG's PREP Web page, *http://www.uscg.mil*;

(2) The National Response Team's ''Integrated Contingency Plan Guidance,'' which can be found using the search function at the National Response Center's Web site, *http://www.nrt.org and*;

(3) 33 CFR Part 154, Appendix C, ''Guidelines for Determining and Evaluating Required Response Resources for Facility Response Plans.''

Response Plan: Section 1. Information Summary

Section 1 would include the following:

(a) For the core plan:

(1) The name and address of the operator; and

(2) For each response zone which contains one or more line sections that meet the criteria for determining significant and substantial harm as described in §194.103, a listing and description of the response zones, including county(s) and state(s).

(b) For each response zone appendix:

(1) The information summary for the core plan;

(2) The name and telephone number of the qualified individual, available on a 24-hour basis;

(3) A description of the response zone, including county(s) and state(s) in which a worst case discharge could cause substantial harm to the environment;

(4) A list of line sections contained in the response zone, identified by milepost or survey station number or other operator designation.

(5) The basis for the operator's determination of significant and substantial harm; and

(6) The type of oil and volume of the worst case discharge.

(c) The certification that the operator has obtained, through contract or other approved means, the necessary private personnel and equipment to respond, to the maximum extent practicable, to a worst case discharge or a substantial threat of such a discharge.

Response Plan: Section 2. Notification Procedures

Section 2 would include the following:

(a) Notification requirements that apply in each area of operation of pipelines covered by the plan, including applicable State or local requirements;

(b) A checklist of notifications the operator or qualified individual is required to make under the response plan, listed in the order of priority;

(c) Names of persons (individuals or organizations) to be notified of a discharge, indicating whether notification is to be performed by operating personnel or other personnel;

(d) Procedures for notifying qualified individuals;

(e) The primary and secondary communication methods by which notifications can be made; and

(f) The information to be provided in the initial and each follow-up notification, including the following:

(1) Name of pipeline;

(2) Time of discharge;

(3) Location of discharge;

(4) Name of oil involved;

(5) Reason for discharge (e.g., material failure, excavation damage, corrosion);

(6) Estimated volume of oil discharged;

(7) Weather conditions on scene; and

(8) Actions taken or planned by persons on scene.

Response Plan: Section 3. Spill Detection and On-Scene Spill Mitigation Procedures

Section 3 would include the following:

(a) Methods of initial discharge detection;

(b) Procedures, listed in the order of priority, that personnel are required to follow in responding to a pipeline emergency to mitigate or prevent any discharge from the pipeline;

(c) A list of equipment that may be needed in response activities on land and navigable waters, including—

(1) Transfer hoses and connection equipment;

(2) Portable pumps and ancillary equipment; and

(3) Facilities available to transport and receive oil from a leaking pipeline;

(d) Identification of the availability, location, and contact telephone numbers to obtain equipment for response activities on a 24-hour basis; and

(e) Identification of personnel and their location, telephone numbers, and responsibilities for use of equipment in response activities on a 24-hour basis.

Response Plan: Section 4. Response Activities

Section 4 would include the following:

(a) Responsibilities of, and actions to be taken by, operating personnel to initiate and supervise response actions pending the arrival of the qualified individual or other response resources identified in the response plan;

(b) The qualified individual's responsibilities and authority, including notification of the response resources identified in the plan;

(c) Procedures for coordinating the actions of the operator or qualified individual with the action of the OSC responsible for monitoring or directing those actions;

(d) Oil spill response organizations available, through contract or other approved means, to respond to a worst case discharge to the maximum extent practicable; and

(e) For each organization identified under paragraph (d) of this section, a listing of:

(1) Equipment and supplies available; and

(2) Trained personnel necessary to continue operation of the equipment and staff the oil spill removal organization for the first 7 days of the response.

Response Plan: Section 5. List of Contacts

Section 5 would include the names and addresses of the following individuals or organizations, with telephone numbers at which they can be contacted on a 24-hour basis:

(a) A list of persons the plan requires the operator to contact;

(b) Qualified individuals for the operator's areas of operation;

(c) Applicable insurance representatives or surveyors for the operator's areas of operation; and

(d) Persons or organizations to notify for activation of response resources.

Response plan: Section 6. Training Procedures

Section 6 would include a description of the training procedures and programs of the operator.

Response plan: Section 7. Drill Procedures

Section 7 would include a description of the drill procedures and programs the operator uses to assess whether its response plan will function as planned. It would include:

(a) Announced and unannounced drills;

(b) The types of drills and their frequencies. For example, drills could be described as follows:

(1) Manned pipeline emergency procedures and qualified individual notification drills conducted quarterly.

(2) Drills involving emergency actions by assigned operating or maintenance personnel and notification of the qualified individual on pipeline facilities which are normally unmanned, conducted quarterly.

(3) Shore-based spill management team tabletop drills conducted yearly.

(4) Oil spill removal organization field equipment deployment drills conducted yearly.

(5) A drill that exercises the entire response plan for each response zone, would be conducted at least once every 3 years.

Response plan: Section 8. Response Plan Review and Update Procedures

Section 8 would include the following:

(a) Procedures to meet § 194.121; and

(b) Procedures to review the plan after a worst case discharge and to evaluate and record the plan's effectiveness.

Response plan: Section 9. Response Zone Appendices.

Each response zone appendix would provide the following information:

(a) The name and telephone number of the qualified individual;

(b) Notification procedures;

(c) Spill detection and mitigation procedures;

(d) Name, address, and telephone number of oil spill response organization;

(e) Response activities and response resources including—

(1) Equipment and supplies necessary to meet §194.115, and

(2) The trained personnel necessary to sustain operation of the equipment and to staff the oil spill removal organization and spill management team for the first 7 days of the response;

(f) Names and telephone numbers of Federal, state and local agencies which the operator expects to assume pollution response responsibilities;

(g) The worst case discharge volume;

(h) The method used to determine the worst case discharge volume, with calculations;

(i) A map that clearly shows—

(1) The location of the worst case discharge, and

(2) The distance between each line section in the response zone and—

(i) Each potentially affected public drinking water intake, lake, river, and stream within a radius of 5 miles (8 kilometers) of the line section, and

(ii) Each potentially affected environmentally sensitive area within a radius of 1 mile (1.6 kilometer) of the line section;

(j) A piping diagram and plan-profile drawing of each line section, which may be kept separate from the response plan if the location is identified; and

(k) For every oil transported by each pipeline in the response zone, emergency response data that—

(1) Include the name, description, physical and chemical characteristics, health and safety hazards, and initial spill-handling and firefighting methods; and

(2) Meet 29 CFR 1910.1200 or 49 CFR 172.602.

[58 FR 253, Jan. 5, 1993, as amended by Amdt. 194–3, 63 FR 37505, July 13, 1998; Amdt. 194–4, 70 FR 8748, Feb. 23, 2005]

APPENDIX B TO PART 194—HIGH VOLUME AREAS

As of January 5, 1993 the following areas are high volume areas:

Major rivers	Nearest town and state
Arkansas River	N. Little Rock, AR.
Arkansas River	Jenks, OK.
Arkansas River	Little Rock, AR.
Black Warrior River	Moundville, AL.
Black Warrior River	Akron, AL.
Brazos River	Glen Rose, TX.
Brazos River	Sealy, TX.
Catawba River	Mount Holly, NC.
Chattahoochee River	Sandy Springs, GA.
Colorado River	Yuma, AZ.
Colorado River	LaPaz, AZ.
Connecticut River	Lancaster, NH.
Coosa River	Vincent, AL.
Cumberland River	Clarksville, TN.
Delaware River	Frenchtown, NJ.
Delaware River	Lower Chichester, NJ.
Gila River	Gila Bend, AZ.
Grand River	Bosworth, MO.
Illinois River	Chillicothe, IL.
Illinois River	Havanna, IL.
James River	Arvonia, VA.
Kankakee River	Kankakee, IL.
Kankakee River	South Bend, IN.
Kankakee River	Wilmington, IL.
Kentucky River	Salvisa, KY.
Kentucky River	Worthville, KY.
Maumee River	Defiance, OH.
Maumee River	Toledo, OH.
Mississippi River	Myrtle Grove, LA.
Mississippi River	Woodriver, IL.
Mississippi River	Chester, IL.
Mississippi River	Cape Girardeau, MO.
Mississippi River	Woodriver, IL.
Mississippi River	St. James, LA.
Mississippi River	New Roads, LA.
Mississippi River	Ball Club, MN.
Mississippi River	Mayersville, MS.
Mississippi River	New Roads, LA.
Mississippi River	Quincy, IL.
Mississippi River	Ft. Madison, IA.
Missouri River	Waverly, MO.
Missouri River	St. Joseph, MO.
Missouri River	Weldon Springs, MO.
Missouri River	New Frankfort, MO.
Naches River	Beaumont, TX.
Ohio River	Joppa, IL.
Ohio River	Cincinnati, OH.
Ohio River	Owensboro, KY.
Pascagoula River	Lucedale, MS.
Pascagoula River	Wiggins, MS.
Pearl River	Columbia, MS.
Pearl River	Oria, TX.
Platte River	Ogaliala, NE.
Potomac River	Reston, VA.
Rappahannock River	Midland, VA.
Raritan River	South Bound Brook, NJ.
Raritan River	Highland Park, NJ.
Red River (of the South)	Hanna, LA.
Red River (of the South)	Bonham, TX.
Red River (of the South)	Dekalb, TX.
Red River (of the South)	Sentell Plantation, LA.
Red River (of the North)	Wahpeton, ND.
Rio Grande	Anthony, NM.
Sabine River	Edgewood, TX.
Sabine River	Leesville, LA.
Sabine River	Orange, TX.
Sabine River	Echo, TX.
Savannah River	Hartwell, GA.
Smokey Hill River	Abilene, KS.
Susquehanna River	Darlington, MD.
Tenessee River	New Johnsonville, TN.
Wabash River	Harmony, IN.
Wabash River	Terre Haute, IN.
Wabash River	Mt. Carmel, IL.

Major rivers	Nearest town and state
White River	Batesville, AR.
White River	Grand Glaise, AR.
Wisconsin River	Wisconsin Rapids, WI.
Yukon River	Fairbanks, AK.

Other Navigable Waters

Arthur Kill Channel, NY
Cook Inlet, AK
Freeport, TX
Los Angeles/Long Beach Harbor, CA
Port Lavaca, TX
San Fransico/San Pablo Bay, CA

PART 195—TRANSPORTATION OF HAZARDOUS LIQUIDS BY PIPELINE

Subpart A—General

Sec.
195.0 Scope.
195.1 Which pipelines are covered by this part?
195.2 Definitions.
195.3 Incorporation by reference.
195.4 Compatibility necessary for transportation of hazardous liquids or carbon dioxide.
195.5 Conversion to service subject to this part.
195.6 Unusually Sensitive Areas (USAs).
195.8 Transportation of hazardous liquid or carbon dioxide in pipelines constructed with other than steel pipe.
195.9 Outer continental shelf pipelines.
195.10 Responsibility of operator for compliance with this part.
195.11 What is a regulated rural gathering line and what requirements apply?
195.12 What requirements apply to low-stress pipelines in rural areas?

Subpart B—Annual, Accident, and Safety-Related Condition Reporting

195.48 Scope.
195.49 Annual report.
195.50 Reporting accidents.
195.52 Immediate notice of certain accidents.
195.54 Accident reports.
195.55 Reporting safety-related conditions.
195.56 Filing safety-related condition reports.
195.57 Filing offshore pipeline condition reports.
195.58 Report submission requirements.
195.59 Abandonment or deactivation of facilities.
195.60 Operator assistance in investigation.
195.63 OMB control number assigned to information collection.
195.64 National Registry of Pipeline and LNG operators.

Subpart C—Design Requirements

195.100 Scope.
195.101 Qualifying metallic components other than pipe.
195.102 Design temperature.
195.104 Variations in pressure.
195.106 Internal design pressure.
195.108 External pressure.
195.110 External loads.
195.111 Fracture propagation.
195.112 New pipe.
195.114 Used pipe.
195.116 Valves.
195.118 Fittings.
195.120 Passage of internal inspection devices.
195.122 Fabricated branch connections.
195.124 Closures.
195.126 Flange connection.
195.128 Station piping.
195.130 Fabricated assemblies.
195.132 Design and construction of aboveground breakout tanks.
195.134 CPM leak detection.

Subpart D—Construction

195.200 Scope.
195.202 Compliance with specifications or standards.
195.204 Inspection—general.
195.205 Repair, alteration and reconstruction of aboveground breakout tanks that have been in service.
195.206 Material inspection.
195.207 Transportation of pipe.
195.208 Welding of supports and braces.
195.210 Pipeline location.
195.212 Bending of pipe.
195.214 Welding: General.
195.216 Welding: Miter joints.
195.222 Welders: Qualification of welders.
195.224 Welding: Weather.
195.226 Welding: Arc burns.
195.228 Welds and welding inspection: Standards of acceptability.
195.230 Welds: Repair or removal of defects.
195.234 Welds: Nondestructive testing.
195.236–195.244 [Reserved]
195.246 Installation of pipe in a ditch.
195.248 Cover over buried pipeline.
195.250 Clearance between pipe and underground structures.
195.252 Backfilling.
195.254 Above ground components.
195.256 Crossing of railroads and highways.
195.258 Valves: General.
195.260 Valves: Location.
195.262 Pumping equipment.
195.264 Impoundment, protection against entry, normal/emergency venting or pressure/vacuum relief for aboveground breakout tanks.
195.266 Construction records.

Subpart E—Pressure Testing

195.300 Scope.
195.302 General requirements.
195.303 Risk-based alternative to pressure testing older hazardous liquid and carbon dioxide pipelines.
195.304 Test pressure.
195.305 Testing of components.
195.306 Test medium.
195.307 Pressure testing aboveground breakout tanks.
195.308 Testing of tie-ins.
195.310 Records.

Subpart F—Operation and Maintenance

195.400 Scope.
195.401 General requirements.
195.402 Procedural manual for operations, maintenance, and emergencies.
195.403 Emergency response training.
195.404 Maps and records.
195.405 Protection against ignitions and safe access/egress involving floating roofs.
195.406 Maximum operating pressure.
195.408 Communications.
195.410 Line markers.
195.412 Inspection of rights-of-way and crossings under navigable waters.
195.413 Underwater inspection and reburial of pipelines in the Gulf of Mexico and its inlets.
195.414–195.418 [Reserved]
195.420 Valve maintenance.
195.422 Pipeline repairs.
195.424 Pipe movement.
195.426 Scraper and sphere facilities.
195.428 Overpressure safety devices and overfill protection systems.
195.430 Firefighting equipment.
195.432 Inspection of in-service breakout tanks.
195.434 Signs.
195.436 Security of facilities.
195.438 Smoking or open flames.
195.440 Public awareness.
195.442 Damage prevention program.
195.444 CPM leak detection.
195.446 Control room management.

HIGH CONSEQUENCE AREAS

195.450 Definitions.

PIPELINE INTEGRITY MANAGEMENT

195.452 Pipeline integrity management in high consequence areas.

Subpart G—Qualification of Pipeline Personnel

195.501 Scope.
195.503 Definitions.
195.505 Qualification program.
195.507 Recordkeeping.
195.509 General.

Subpart H—Corrosion Control

195.551 What do the regulations in this subpart cover?
195.553 What special definitions apply to this subpart?
195.555 What are the qualifications for supervisors?
195.557 Which pipelines must have coating for external corrosion control?
195.559 What coating material may I use for external corrosion control?
195.561 When must I inspect pipe coating used for external corrosion control?
195.563 Which pipelines must have cathodic protection?
195.565 How do I install cathodic protection on breakout tanks?
195.567 Which pipelines must have test leads and what must I do to install and maintain the leads?
195.569 Do I have to examine exposed portions of buried pipelines?
195.571 What criteria must I use to determine the adequacy of cathodic protection?
195.573 What must I do to monitor external corrosion control?
195.575 Which facilities must I electrically isolate and what inspections, tests, and safeguards are required?
195.577 What must I do to alleviate interference currents?
195.579 What must I do to mitigate internal corrosion?
195.581 Which pipelines must I protect against atmospheric corrosion and what coating material may I use?
195.583 What must I do to monitor atmospheric corrosion control?
195.585 What must I do to correct corroded pipe?
195.587 What methods are available to determine the strength of corroded pipe?
195.588 What standards apply to direct assessment?
195.589 What corrosion control information do I have to maintain?

APPENDIX A TO PART 195—DELINEATION BETWEEN FEDERAL AND STATE JURISDICTION—STATEMENT OF AGENCY POLICY AND INTERPRETATION

APPENDIX B TO PART 195—RISK-BASED ALTERNATIVE TO PRESSURE TESTING OLDER HAZARDOUS LIQUID AND CARBON DIOXIDE PIPELINES

APPENDIX C TO PART 195—GUIDANCE FOR IMPLEMENTATION OF AN INTEGRITY MANAGEMENT PROGRAM

AUTHORITY: 49 U.S.C. 5103, 60102, 60104, 60108, 60109, 60116, 60118, and 60137; and 49 CFR 1.53.

SOURCE: Amdt. 195–22, 46 FR 38360, July 27, 1981, unless otherwise noted.

EDITORIAL NOTE: Nomenclature changes to part 195 appear at 71 FR 33409, June 9, 2006.

Subpart A—General

§ 195.0 Scope.

This part prescribes safety standards and reporting requirements for pipeline facilities used in the transportation of hazardous liquids or carbon dioxide.

[Amdt. 195–45, 56 FR 26925, June 12, 1991]

§ 195.1 Which pipelines are covered by this Part?

(a) *Covered*. Except for the pipelines listed in paragraph (b) of this Section, this Part applies to pipeline facilities and the transportation of hazardous liquids or carbon dioxide associated with those facilities in or affecting interstate or foreign commerce, including pipeline facilities on the Outer Continental Shelf (OCS). Covered pipelines include, but are not limited to:

(1) Any pipeline that transports a highly volatile liquid;

(2) Any pipeline segment that crosses a waterway currently used for commercial navigation;

(3) Except for a gathering line not covered by paragraph (a)(4) of this Section, any pipeline located in a rural or non-rural area of any diameter regardless of operating pressure;

(4) Any of the following onshore gathering lines used for transportation of petroleum:

(i) A pipeline located in a non-rural area;

(ii) A regulated rural gathering line as provided in § 195.11; or

(iii) A pipeline located in an inlet of the Gulf of Mexico as provided in § 195.413.

(b) *Excepted*. This Part does not apply to any of the following:

(1) Transportation of a hazardous liquid transported in a gaseous state;

(2) Transportation of a hazardous liquid through a pipeline by gravity;

(3) Transportation of a hazardous liquid through any of the following low-stress pipelines:

(i) A pipeline subject to safety regulations of the U.S. Coast Guard; or

(ii) A pipeline that serves refining, manufacturing, or truck, rail, or vessel terminal facilities, if the pipeline is less than one mile long (measured outside facility grounds) and does not cross an offshore area or a waterway currently used for commercial navigation;

(4) Transportation of petroleum through an onshore rural gathering line that does not meet the definition of a ''regulated rural gathering line'' as provided in § 195.11. This exception does not apply to gathering lines in the inlets of the Gulf of Mexico subject to § 195.413;

(5) Transportation of hazardous liquid or carbon dioxide in an offshore pipeline in state waters where the pipeline is located upstream from the outlet flange of the following farthest downstream facility: The facility where hydrocarbons or carbon dioxide are produced or the facility where produced hydrocarbons or carbon dioxide are first separated, dehydrated, or otherwise processed;

(6) Transportation of hazardous liquid or carbon dioxide in a pipeline on the OCS where the pipeline is located upstream of the point at which operating responsibility transfers from a producing operator to a transporting operator;

(7) A pipeline segment upstream (generally seaward) of the last valve on the last production facility on the OCS where a pipeline on the OCS is producer-operated and crosses into state waters without first connecting to a transporting operator's facility on the OCS. Safety equipment protecting PHMSA-regulated pipeline segments is not excluded. A producing operator of a segment falling within this exception may petition the Administrator, under § 190.9 of this chapter, for approval to operate under PHMSA regulations governing pipeline design, construction, operation, and maintenance;

(8) Transportation of hazardous liquid or carbon dioxide through onshore production (including flow lines), refining, or manufacturing facilities or storage or in-plant piping systems associated with such facilities;

(9) Transportation of hazardous liquid or carbon dioxide:

(i) By vessel, aircraft, tank truck, tank car, or other non-pipeline mode of transportation; or

(ii) Through facilities located on the grounds of a materials transportation

terminal if the facilities are used exclusively to transfer hazardous liquid or carbon dioxide between non-pipeline modes of transportation or between a non-pipeline mode and a pipeline. These facilities do not include any device and associated piping that are necessary to control pressure in the pipeline under § 195.406(b); or

(10) Transportation of carbon dioxide downstream from the applicable following point:

(i) The inlet of a compressor used in the injection of carbon dioxide for oil recovery operations, or the point where recycled carbon dioxide enters the injection system, whichever is farther upstream; or

(ii) The connection of the first branch pipeline in the production field where the pipeline transports carbon dioxide to an injection well or to a header or manifold from which a pipeline branches to an injection well.

(c) *Breakout tanks.* Breakout tanks subject to this Part must comply with requirements that apply specifically to breakout tanks and, to the extent applicable, with requirements that apply to pipeline systems and pipeline facilities. If a conflict exists between a requirement that applies specifically to breakout tanks and a requirement that applies to pipeline systems or pipeline facilities, the requirement that applies specifically to breakout tanks prevails. Anhydrous ammonia breakout tanks need not comply with §§ 195.132(b), 195.205(b), 195.242(c) and (d), 195.264(b) and (e), 195.307, 195.428(c) and (d), and 195.432(b) and (c).

EDITORIAL NOTE: For FEDERAL REGISTER citations affecting § 195.1, see the List of CFR Sections Affected, which appears in the Finding Aids section of the printed volume and at *www.fdsys.gov*.

§ 195.2 Definitions.

As used in this part—

Abandoned means permanently removed from service.

Administrator means the Administrator, Pipeline and Hazardous Materials Safety Administration or his or her delegate.

Alarm means an audible or visible means of indicating to the controller that equipment or processes are outside operator-defined, safety-related parameters.

Barrel means a unit of measurement equal to 42 U.S. standard gallons.

Breakout tank means a tank used to (a) relieve surges in a hazardous liquid pipeline system or (b) receive and store hazardous liquid transported by a pipeline for reinjection and continued transportation by pipeline.

Carbon dioxide means a fluid consisting of more than 90 percent carbon dioxide molecules compressed to a supercritical state.

Component means any part of a pipeline which may be subjected to pump pressure including, but not limited to, pipe, valves, elbows, tees, flanges, and closures.

Computation Pipeline Monitoring (CPM) means a software-based monitoring tool that alerts the pipeline dispatcher of a possible pipeline operating anomaly that may be indicative of a commodity release.

Control room means an operations center staffed by personnel charged with the responsibility for remotely monitoring and controlling a pipeline facility.

Controller means a qualified individual who remotely monitors and controls the safety-related operations of a pipeline facility via a SCADA system from a control room, and who has operational authority and accountability for the remote operational functions of the pipeline facility.

Corrosive product means ''corrosive material'' as defined by § 173.136 Class 8–Definitions of this chapter.

Exposed underwater pipeline means an underwater pipeline where the top of the pipe protrudes above the underwater natural bottom (as determined by recognized and generally accepted practices) in waters less than 15 feet (4.6 meters) deep, as measured from mean low water.

Flammable product means ''flammable liquid'' as defined by § 173.120 Class 3–Definitions of this chapter.

Gathering line means a pipeline 219.1 mm (8⅝ in) or less nominal outside diameter that transports petroleum from a production facility.

Gulf of Mexico and its inlets means the waters from the mean high water mark of the coast of the Gulf of Mexico and

its inlets open to the sea (excluding rivers, tidal marshes, lakes, and canals) seaward to include the territorial sea and Outer Continental Shelf to a depth of 15 feet (4.6 meters), as measured from the mean low water.

Hazard to navigation means, for the purposes of this part, a pipeline where the top of the pipe is less than 12 inches (305 millimeters) below the underwater natural bottom (as determined by recognized and generally accepted practices) in waters less than 15 feet (4.6 meters) deep, as measured from the mean low water.

Hazardous liquid means petroleum, petroleum products, or anhydrous ammonia.

Highly volatile liquid or *HVL* means a hazardous liquid which will form a vapor cloud when released to the atmosphere and which has a vapor pressure exceeding 276 kPa (40 psia) at 37.8 °C (100 °F).

In-plant piping system means piping that is located on the grounds of a plant and used to transfer hazardous liquid or carbon dioxide between plant facilities or between plant facilities and a pipeline or other mode of transportation, not including any device and associated piping that are necessary to control pressure in the pipeline under § 195.406(b).

Interstate pipeline means a pipeline or that part of a pipeline that is used in the transportation of hazardous liquids or carbon dioxide in interstate or foreign commerce.

Intrastate pipeline means a pipeline or that part of a pipeline to which this part applies that is not an interstate pipeline.

Line section means a continuous run of pipe between adjacent pressure pump stations, between a pressure pump station and terminal or breakout tanks, between a pressure pump station and a block valve, or between adjacent block valves.

Low-stress pipeline means a hazardous liquid pipeline that is operated in its entirety at a stress level of 20 percent or less of the specified minimum yield strength of the line pipe.

Maximum operating pressure (MOP) means the maximum pressure at which a pipeline or segment of a pipeline may be normally operated under this part.

Nominal wall thickness means the wall thickness listed in the pipe specifications.

Offshore means beyond the line of ordinary low water along that portion of the coast of the United States that is in direct contact with the open seas and beyond the line marking the seaward limit of inland waters.

Operator means a person who owns or operates pipeline facilities.

Outer Continental Shelf means all submerged lands lying seaward and outside the area of lands beneath navigable waters as defined in Section 2 of the Submerged Lands Act (43 U.S.C. 1301) and of which the subsoil and seabed appertain to the United States and are subject to its jurisdiction and control.

Person means any individual, firm, joint venture, partnership, corporation, association, State, municipality, cooperative association, or joint stock association, and includes any trustee, receiver, assignee, or personal representative thereof.

Petroleum means crude oil, condensate, natural gasoline, natural gas liquids, and liquefied petroleum gas.

Petroleum product means flammable, toxic, or corrosive products obtained from distilling and processing of crude oil, unfinished oils, natural gas liquids, blend stocks and other miscellaneous hydrocarbon compounds.

Pipe or *line pipe* means a tube, usually cylindrical, through which a hazardous liquid or carbon dioxide flows from one point to another.

Pipeline or *pipeline system* means all parts of a pipeline facility through which a hazardous liquid or carbon dioxide moves in transportation, including, but not limited to, line pipe, valves, and other appurtenances connected to line pipe, pumping units, fabricated assemblies associated with pumping units, metering and delivery stations and fabricated assemblies therein, and breakout tanks.

Pipeline facility means new and existing pipe, rights-of-way and any equipment, facility, or building used in the transportation of hazardous liquids or carbon dioxide.

Production facility means piping or equipment used in the production, extraction, recovery, lifting, stabilization, separation or treating of petroleum or carbon dioxide, or associated storage or measurement. (To be a production facility under this definition, piping or equipment must be used in the process of extracting petroleum or carbon dioxide from the ground or from facilities where CO_2 is produced, and preparing it for transportation by pipeline. This includes piping between treatment plants which extract carbon dioxide, and facilities utilized for the injection of carbon dioxide for recovery operations.)

Rural area means outside the limits of any incorporated or unincorpated city, town, village, or any other designated residential or commercial area such as a subdivision, a business or shopping center, or community development.

Specified minimum yield strength means the minimum yield strength, expressed in p.s.i. (kPa) gage, prescribed by the specification under which the material is purchased from the manufacturer.

Stress level means the level of tangential or hoop stress, usually expressed as a percentage of specified minimum yield strength.

Supervisory Control and Data Acquisition (SCADA) system means a computer-based system or systems used by a controller in a control room that collects and displays information about a pipeline facility and may have the ability to send commands back to the pipeline facility.

Surge pressure means pressure produced by a change in velocity of the moving stream that results from shutting down a pump station or pumping unit, closure of a valve, or any other blockage of the moving stream.

Toxic product means ''poisonous material'' as defined by § 173.132 Class 6, Division 6.1–Definitions of this chapter.

Unusually Sensitive Area (USA) means a drinking water or ecological resource area that is unusually sensitive to environmental damage from a hazardous liquid pipeline release, as identified under § 195.6.

[Amdt. 195–22, 46 FR 38360, July 27, 1981; 47 FR 32721, July 29, 1982, as amended by Amdt. 195–33, 50 FR 15898, Apr. 23, 1985; 50 FR 38660, Sept. 24, 1985; Amdt. 195–36, 51 FR 15007, Apr. 22, 1986; Amdt. 195–45, 56 FR 26925, June 12, 1991; Amdt. 195–47, 56 FR 63771, Dec. 5, 1991; Amdt. 195–50, 59 FR 17281, Apr. 12, 1994; Amdt. 195–52, 59 FR 33395, 33396, June 28, 1994; Amdt. 195–53, 59 FR 35471, July 12, 1994; Amdt. 195–59, 62 FR 61695, Nov. 19, 1997; Amdt. 195–62, 63 FR 36376, July 6, 1998; Amdt. 195–63, 63 FR 37506, July 13, 1998; Amdt. 195–69, 65 FR 54444, Sept. 8, 2000; Amdt. 195–71, 65 FR 80544, Dec. 21, 2000; 68 FR 11749, Mar. 12, 2003; Amdt. 195–81, 69 FR 32896, June 14, 2004; Amdt. 195–82, 69 FR 48406, Aug. 10, 2004; 70 FR 11140, Mar. 8, 2005; Amdt. 195–93, 74 FR 63328, Dec. 3, 2009]

§ 195.3 Incorporation by reference.

(a) Any document or portion thereof incorporated by reference in this part is included in this part as though it were printed in full. When only a portion of a document is referenced, then this part incorporates only that referenced portion of the document and the remainder is not incorporated. Applicable editions are listed in paragraph (c) of this section in parentheses following the title of the referenced material. Earlier editions listed in previous editions of this section may be used for components manufactured, designed, or installed in accordance with those earlier editions at the time they were listed. The user must refer to the appropriate previous edition of 49 CFR for a listing of the earlier editions.

(b) All incorporated materials are available for inspection in the Office of Pipelline Safety, Pipeline and Hazardous Materials Safety Administration, U.S. Department of Transportation, 1200 New Jersey Avenue, SE., Washington, DC, 20590–0001, 202–366–4595, or at the National Archives and Records Administration (NARA). For information on the availability of this material at NARA, call 202–741–6030 or go to: *http://www.archives.gov/federal_register/code_of_federal_regulations/ibr_locations.html*. These materials have been approved for incorporation by reference by the Director of the Federal Register in accordance with 5

U.S.C. 552(a) and 1 CFR part 51. In addition, materials incorporated by reference are available as follows:

1. Pipeline Research Council International, Inc. (PRCI), c/o Technical Toolboxes, 3801 Kirby Drive, Suite 520, Houston, TX 77098.

2. American Petroleum Institute (API), 1220 L Street, NW., Washington, DC 20005.

3. ASME International (ASME), Three Park Avenue, New York, NY 10016–5990.

4. Manufacturers Standardization Society of the Valve and Fittings Industry, Inc. (MSS), 127 Park Street, NE., Vienna, VA 22180.

5. American Society for Testing and Materials (ASTM), 100 Barr Harbor Drive, West Conshohocken, PA 19428.

6. National Fire Protection Association (NFPA), 1 Batterymarch Park, P.O. Box 9101, Quincy, MA 02269–9101.

7. NACE International, 1440 South Creek Drive, Houston, TX 77084.

(c) The full titles of publications incorporated by reference wholly or partially in this part are as follows. Numbers in parentheses indicate applicable editions:

Source and name of referenced material	49 CFR reference
A. Pipeline Research Council International, Inc. (PRCI):	
(1) AGA Pipeline Research Committee, Project PR–3–805, ''A Modified Criterion for Evaluating the Remaining Strength of Corroded Pipe,'' (December 22, 1989). The RSTRENG program may be used for calculating remaining strength.	§§ 195.452(h)(4)(i)(B); 195.452(h)(4)(iii)(D); 195.587.
B. American Petroleum Institute (API):	
(1) ANSI/API Specification 5L/ISO 3183, ''Specification for Line Pipe'' (44th edition, October 2007, including errata (January 2009) and addendum (February 2009)).	§§ 195.106(b)(1)(i); 195.106(e).
(2) API Recommended Practice 5L1, ''Recommended Practice for Railroad Transportation of Line Pipe'' (6th edition, July 2002).	§ 195.207(a).
(3) API Recommended Practice 5LW, ''Transportation of Line Pipe on Barges and Marine Vessels'' (2nd edition, December 1996, effective March 1, 1997).	§ 195.207(b).
(4) ANSI/API Specification 6D, ''Specification for Pipeline Valves'' (23rd edition, April 2008, effective October 1, 2008) and errata 3 (includes 1 & 2 (2009).	§ 195.116(d).
(5) API Specification 12F, ''Specification for Shop Welded Tanks for Storage of Production Liquids'' (11th edition, November 1, 1994, reaffirmed 2000, errata, February 2007).	§§ 195.132(b)(1); 195.205(b)(2); 195.264(b)(1); 195.264(e)(1); 195.307(a); 195.565; 195.579(d).
(6) API Standard 510, ''Pressure Vessel Inspection Code: In-Service Inspection, Rating, Repair, and Alteration'' (9th edition, June 2006).	§§ 195.205(b)(3); 195.432(c).
(7) API Standard 620, ''Design and Construction of Large, Welded, Low-Pressure Storage Tanks'' (11th edition, February 2008, addendum 1 March 2009).	§§ 195.132(b)(2); 195.205(b)(2); 195.264(b)(1); 195.264(e)(3); 195.307(b).
(8) API Standard 650, ''Welded Steel Tanks for Oil Storage'' (11th edition, June 2007, addendum 1, November 2008).	§§ 195.132(b)(3); 195.205(b)(1); 195.264(b)(1);195.264(e)(2); 195.307(c); 195.307(d); 195.565; 195.579(d).
(9) ANSI/API Recommended Practice 651, ''Cathodic Protection of Aboveground Petroleum Storage Tanks'' (3rd edition, January 2007).	§§ 195.565; 195.579(d).
(10) ANSI/API Recommended Practice 652, ''Linings of Aboveground Petroleum Storage Tank Bottoms'' (3rd edition, October 2005).	§ 195.579(d).
(11) API Standard 653, ''Tank Inspection, Repair, Alteration, and Reconstruction'' (3rd edition, December 2001, includes addendum 1 (September 2003), addendum 2 (November 2005), addendum 3 (February 2008), and errata (April 2008)).	§§ 195.205(b)(1); 195.432(b).
(12) API Standard 1104, ''Welding of Pipelines and Related Facilities'' (20th edition, October 2005, errata/addendum (July 2007), and errata 2 December 2008)).	§§ 195.222(a); 195.228(b); 195.214(a).
(13) API Recommended Practice 1130, ''Computational Pipeline Monitoring for Liquids: Pipeline Segment'' (3rd edition, September 2007).	§§ 195.134; 195.444.
(14) API Recommended Practice 1162, ''Public Awareness Programs for Pipeline Operators'' (1st edition, December 2003).	§§ 195.440(a); 195.440(b); 195.440(c).
(15) API Recommended Practice 1165, ''Recommended Practice for Pipeline SCADA Displays,'' (API RP 1165) First Edition (January 2007).	§ 195.446(c)(1).
(16) API Standard 2000, ''Venting Atmospheric and Low-Pressure Storage Tanks Nonrefrigerated and Refrigerated'' (5th edition, April 1998, errata, November 15, 1999).	§§ 195.264(e)(2); 195.264(e)(3).
(17) API Recommended Practice 2003, ''Protection Against Ignitions Arising Out of Static, Lightning, and Stray Currents'' (7th edition, January 2008).	§ 195.405(a).
(18) API Publication 2026, ''Safe Access/Egress Involving Floating Roofs of Storage Tanks in Petroleum Service'' (2nd edition, April 1998, reaffirmed June 2006).	§ 195.405(b).

Source and name of referenced material	49 CFR reference
(19) API Recommended Practice 2350, ''Overfill Protection for Storage Tanks In Petroleum Facilities''' (3rd edition, January 2005).	§ 195.428(c).
(20) API 2510, ''Design and Construction of LPG Installations'' (8th edition, 2001).	§§ 195.132(b)(3); 195.205(b)(3); 195.264(b)(2); 195.264(e)(4); 195.307(e); 195.428(c); 195.432(c).
(21) API Recommended Practice 1168 ''Pipeline Control Room Management,'' (API RP1168) First Edition (September 2008).	§ 195.446(c)(5), (f)(1).
C. ASME International (ASME):	
(1) ASME/ANSI B16.9–2007, ''Factory-Made Wrought Buttwelding Fittings'' (December 7, 2007).	§ 195.118(a).
(2) ASME/ANSI B31.4–2006, ''Pipeline Transportation Systems for Liquid Hydrocarbons and Other Liquids'' (October 20, 2006).	§ 195.452(h)(4)(i).
(3) ASME/ANSI B31G–1991 (Reaffirmed; 2004), ''Manual for Determining the Remaining Strength of Corroded Pipelines.''.	§§ 195.452(h)(4)(i)(B); 195.452(h)(4)(iii)(D).
(4) ASME/ANSI B31.8–2007, ''Gas Transmission and Distribution Piping Systems'' (November 30, 2007).	§ 195.5(a)(1)(i); 195.406(a)(1)(i).
(5) 2007 ASME Boiler & Pressure Vessel Code, Section VIII, Division 1 ''Rules for Construction of Pressure Vessels'' (2007 edition, July 1, 2007).	§ 195.124; 195.307(e).
(6) 2007 ASME Boiler & Pressure Vessel Code, Section VIII, Division 2 ''Alternate Rules, Rules for Construction of Pressure Vessels'' (2007 edition, July 1, 2007).	§ 195.307(e).
(7) 2007 ASME Boiler & Pressure Vessel Code, Section IX: ''Qualification Standard for Welding and Brazing Procedures, Welders, Brazers, and Welding and Brazing Operators,'' (2007 edition, July 1, 2007).	§ 195.222(a).
D. Manufacturers Standardization Society of the Valve and Fittings Industry, Inc. (MSS):	
(1) MSS SP–75–2004, ''Specification for High Test Wrought Butt Welding Fittings.''.	§ 195.118(a).
(2) [Reserved]	
E. American Society for Testing and Materials (ASTM):	
(1) ASTM A53/A53M–07, ''Standard Specification for Pipe, Steel, Black and Hot-Dipped, Zinc-Coated Welded and Seamless'' (September 1, 2007).	§ 195.106(e).
(2) ASTM A106/A106M–08, ''Standard Specification for Seamless Carbon Steel Pipe for High-Temperature Service'' (July 15, 2008).	§ 195.106(e).
(3) ASTM A333/A 333M–05, ''Standard Specification for Seamless and Welded Steel Pipe for Low-Temperature Service.''.	§ 195.106(e).
(4) ASTM A381–96 (Reapproved 2005), ''Standard Specification for Metal-Arc-Welded Steel Pipe for Use With High-Pressure Transmission Systems'' (October 1, 2005).	§ 195.106(e).
(5) ASTM A671–06, ''Standard Specification for Electric-Fusion-Welded Steel Pipe for Atmospheric and Lower Temperatures'' (May 1, 2006).	§ 195.106(e).
(6) ASTM A672–08, ''Standard Specification for Electric-Fusion-Welded Steel Pipe for High-Pressure Service at Moderate Temperatures'' (May 1, 2008).	§ 195.106(e).
(7) ASTM A691–98 (reapproved 2007), ''Standard Specification for Carbon and Alloy Steel Pipe Electric-Fusion-Welded for High-Pressure Service at High Temperatures.''.	§ 195.106(e).
F. National Fire Protection Association (NFPA):	
(1) NFPA 30, ''Flammable and Combustible Liquids Code'' (2008 edition, approved August 15, 2007).	§ 195.264(b)(1).
(2) [Reserved]	
G. NACE International (NACE):	
(1) NACE SP0169–2007, Standard Practice, ''Control of External Corrosion on Underground or Submerged Metallic Piping Systems'' (reaffirmed March 15, 2007).	§§ 195.571; 195.573(a)(2).
(2) NACE SP0502–2008, Standard Practice, ''Pipeline External Corrosion Direct Assessment Methodology'' (reaffirmed March 20, 2008).	§ 195.588.

[Amdt. 195–22, 46 FR 38360, July 27, 1981; 47 FR 32721, July 29, 1982]

EDITORIAL NOTE: For FEDERAL REGISTER citations affecting § 195.3, see the List of CFR Sections Affected, which appears in the Finding Aids section of the printed volume and at *www.fdsys.gov*.

§ 195.4 Compatibility necessary for transportation of hazardous liquids or carbon dioxide.

No person may transport any hazardous liquid or carbon dioxide unless the hazardous liquid or carbon dioxide is chemically compatible with both the pipeline, including all components, and

any other commodity that it may come into contact with while in the pipeline.

[Amdt. 195–45, 56 FR 26925, June 12, 1991]

§ 195.5 Conversion to service subject to this part.

(a) A steel pipeline previously used in service not subject to this part qualifies for use under this part if the operator prepares and follows a written procedure to accomplish the following:

(1) The design, construction, operation, and maintenance history of the pipeline must be reviewed and, where sufficient historical records are not available, appropriate tests must be performed to determine if the pipeline is in satisfactory condition for safe operation. If one or more of the variables necessary to verify the design pressure under § 195.106 or to perform the testing under paragraph (a)(4) of this section is unknown, the design pressure may be verified and the maximum operating pressure determined by—

(i) Testing the pipeline in accordance with ASME B31.8, Appendix N, to produce a stress equal to the yield strength; and

(ii) Applying, to not more than 80 percent of the first pressure that produces a yielding, the design factor F in § 195.106(a) and the appropriate factors in § 195.106(e).

(2) The pipeline right-of-way, all aboveground segments of the pipeline, and appropriately selected underground segments must be visually inspected for physical defects and operating conditions which reasonably could be expected to impair the strength or tightness of the pipeline.

(3) All known unsafe defects and conditions must be corrected in accordance with this part.

(4) The pipeline must be tested in accordance with subpart E of this part to substantiate the maximum operating pressure permitted by § 195.406.

(b) A pipeline that qualifies for use under this section need not comply with the corrosion control requirements of subpart H of this part until 12 months after it is placed into service, notwithstanding any previous deadlines for compliance.

(c) Each operator must keep for the life of the pipeline a record of the investigations, tests, repairs, replacements, and alterations made under the requirements of paragraph (a) of this section.

[Amdt. 195–22, 46 FR 38360, July 27, 1981, as amended by Amdt. 195–52, 59 FR 33396, June 28, 1994; Amdt. 195–173, 66 FR 67004, Dec. 27, 2001]

§ 195.6 Unusually Sensitive Areas (USAs).

As used in this part, a USA means a drinking water or ecological resource area that is unusually sensitive to environmental damage from a hazardous liquid pipeline release.

(a) An USA drinking water resource is:

(1) The water intake for a Community Water System (CWS) or a Nontransient Non-community Water System (NTNCWS) that obtains its water supply primarily from a surface water source and does not have an adequate alternative drinking water source;

(2) The Source Water Protection Area (SWPA) for a CWS or a NTNCWS that obtains its water supply from a Class I or Class IIA aquifer and does not have an adequate alternative drinking water source. Where a state has not yet identified the SWPA, the Wellhead Protection Area (WHPA) will be used until the state has identified the SWPA; or

(3) The sole source aquifer recharge area where the sole source aquifer is a karst aquifer in nature.

(b) An USA ecological resource is:

(1) An area containing a critically imperiled species or ecological community;

(2) A multi-species assemblage area;

(3) A migratory waterbird concentration area;

(4) An area containing an imperiled species, threatened or endangered species, depleted marine mammal species, or an imperiled ecological community where the species or community is aquatic, aquatic dependent, or terrestrial with a limited range; or

(5) An area containing an imperiled species, threatened or endangered species, depleted marine mammal species, or imperiled ecological community where the species or community occurrence is considered to be one of the most viable, highest quality, or in the best condition, as identified by an element occurrence ranking (EORANK) of

A (excellent quality) or B (good quality).

(c) As used in this part—

Adequate Alternative Drinking Water Source means a source of water that currently exists, can be used almost immediately with a minimal amount of effort and cost, involves no decline in water quality, and will meet the consumptive, hygiene, and fire fighting requirements of the existing population of impacted customers for at least one month for a surface water source of water and at least six months for a groundwater source.

Aquatic or Aquatic Dependent Species or Community means a species or community that primarily occurs in aquatic, marine, or wetland habitats, as well as species that may use terrestrial habitats during all or some portion of their life cycle, but that are still closely associated with or dependent upon aquatic, marine, or wetland habitats for some critical component or portion of their life-history (*i.e.*, reproduction, rearing and development, feeding, etc).

Class I Aquifer means an aquifer that is surficial or shallow, permeable, and is highly vulnerable to contamination. Class I aquifers include:

(1) Unconsolidated Aquifers (Class Ia) that consist of surficial, unconsolidated, and permeable alluvial, terrace, outwash, beach, dune and other similar deposits. These aquifers generally contain layers of sand and gravel that, commonly, are interbedded to some degree with silt and clay. Not all Class Ia aquifers are important water-bearing units, but they are likely to be both permeable and vulnerable. The only natural protection of these aquifers is the thickness of the unsaturated zone and the presence of fine-grained material;

(2) Soluble and Fractured Bedrock Aquifers (Class Ib). Lithologies in this class include limestone, dolomite, and, locally, evaporitic units that contain documented karst features or solution channels, regardless of size. Generally these aquifers have a wide range of permeability. Also included in this class are sedimentary strata, and metamorphic and igneous (intrusive and extrusive) rocks that are significantly faulted, fractured, or jointed. In all cases groundwater movement is largely controlled by secondary openings. Well yields range widely, but the important feature is the potential for rapid vertical and lateral ground water movement along preferred pathways, which result in a high degree of vulnerability;

(3) Semiconsolidated Aquifers (Class Ic) that generally contain poorly to moderately indurated sand and gravel that is interbedded with clay and silt. This group is intermediate to the unconsolidated and consolidated end members. These systems are common in the Tertiary age rocks that are exposed throughout the Gulf and Atlantic coastal states. Semiconsolidated conditions also arise from the presence of intercalated clay and caliche within primarily unconsolidated to poorly consolidated units, such as occurs in parts of the High Plains Aquifer; or

(4) Covered Aquifers (Class Id) that are any Class I aquifer overlain by less than 50 feet of low permeability, unconsolidated material, such as glacial till, lacustrian, and loess deposits.

Class IIa aquifer means a Higher Yield Bedrock Aquifer that is consolidated and is moderately vulnerable to contamination. These aquifers generally consist of fairly permeable sandstone or conglomerate that contain lesser amounts of interbedded fine grained clastics (shale, siltstone, mudstone) and occasionally carbonate units. In general, well yields must exceed 50 gallons per minute to be included in this class. Local fracturing may contribute to the dominant primary porosity and permeability of these systems.

Community Water System (CWS) means a public water system that serves at least 15 service connections used by year-round residents of the area or regularly serves at least 25 year-round residents.

Critically imperiled species or ecological community (habitat) means an animal or plant species or an ecological community of extreme rarity, based on The Nature Conservancy's Global Conservation Status Rank. There are generally 5 or fewer occurrences, or very few remaining individuals (less than 1,000) or acres (less than 2,000). These species and ecological communities are extremely vulnerable to extinction due to some natural or man-made factor.

Depleted marine mammal species means a species that has been identified and is protected under the Marine Mammal Protection Act of 1972, as amended (MMPA) (16 U.S.C. 1361 *et seq.*). The term ''depleted'' refers to marine mammal species that are listed as threatened or endangered, or are below their optimum sustainable populations (16 U.S.C. 1362). The term ''marine mammal'' means ''any mammal which is morphologically adapted to the marine environment (including sea otters and members of the orders Sirenia, Pinnipedia, and Cetacea), or primarily inhabits the marine environment (such as the polar bear)'' (16 U.S.C. 1362). The order Sirenia includes manatees, the order Pinnipedia includes seals, sea lions, and walruses, and the order Cetacea includes dolphins, porpoises, and whales.

Ecological community means an interacting assemblage of plants and animals that recur under similar environmental conditions across the landscape.

Element occurrence rank (EORANK) means the condition or viability of a species or ecological community occurrence, based on a population's size, condition, and landscape context. EORANKs are assigned by the Natural Heritage Programs. An EORANK of A means an excellent quality and an EORANK of B means good quality.

Imperiled species or ecological community (habitat) means a rare species or ecological community, based on The Nature Conservancy's Global Conservation Status Rank. There are generally 6 to 20 occurrences, or few remaining individuals (1,000 to 3,000) or acres (2,000 to 10,000). These species and ecological communities are vulnerable to extinction due to some natural or man-made factor.

Karst aquifer means an aquifer that is composed of limestone or dolomite where the porosity is derived from connected solution cavities. Karst aquifers are often cavernous with high rates of flow.

Migratory waterbird concentration area means a designated Ramsar site or a Western Hemisphere Shorebird Reserve Network site.

Multi-species assemblage area means an area where three or more different critically imperiled or imperiled species or ecological communities, threatened or endangered species, depleted marine mammals, or migratory waterbird concentrations co-occur.

Non-transient Non-community Water System (NTNCWS) means a public water system that regularly serves at least 25 of the same persons over six months per year. Examples of these systems include schools, factories, and hospitals that have their own water supplies.

Public Water System (PWS) means a system that provides the public water for human consumption through pipes or other constructed conveyances, if such system has at least 15 service connections or regularly serves an average of at least 25 individuals daily at least 60 days out of the year. These systems include the sources of the water supplies—*i.e.*, surface or ground. PWS can be community, non-transient non-community, or transient non-community systems.

Ramsar site means a site that has been designated under The Convention on Wetlands of International Importance Especially as Waterfowl Habitat program. Ramsar sites are globally critical wetland areas that support migratory waterfowl. These include wetland areas that regularly support 20,000 waterfowl; wetland areas that regularly support substantial numbers of individuals from particular groups of waterfowl, indicative of wetland values, productivity, or diversity; and wetland areas that regularly support 1% of the individuals in a population of one species or subspecies of waterfowl.

Sole source aquifer (SSA) means an area designated by the U.S. Environmental Protection Agency under the Sole Source Aquifer program as the ''sole or principal'' source of drinking water for an area. Such designations are made if the aquifer's ground water supplies 50% or more of the drinking water for an area, and if that aquifer were to become contaminated, it would pose a public health hazard. A sole source aquifer that is karst in nature is one composed of limestone where the porosity is derived from connected solution cavities. They are often cavernous, with high rates of flow.

Source Water Protection Area (SWPA) means the area delineated by the state

for a public water supply system (PWS) or including numerous PWSs, whether the source is ground water or surface water or both, as part of the state source water assessment program (SWAP) approved by EPA under section 1453 of the Safe Drinking Water Act.

Species means species, subspecies, population stocks, or distinct vertebrate populations.

Terrestrial ecological community with a limited range means a non-aquatic or non-aquatic dependent ecological community that covers less than five (5) acres.

Terrestrial species with a limited range means a non-aquatic or non-aquatic dependent animal or plant species that has a range of no more than five (5) acres.

Threatened and endangered species (T&E) means an animal or plant species that has been listed and is protected under the Endangered Species Act of 1973, as amended (ESA73) (16 U.S.C. 1531 et seq.). ''Endangered species'' is defined as ''any species which is in danger of extinction throughout all or a significant portion of its range'' (16 U.S.C. 1532). ''Threatened species'' is defined as ''any species which is likely to become an endangered species within the foreseeable future throughout all or a significant portion of its range'' (16 U.S.C. 1532).

Transient Non-community Water System (TNCWS) means a public water system that does not regularly serve at least 25 of the same persons over six months per year. This type of water system serves a transient population found at rest stops, campgrounds, restaurants, and parks with their own source of water.

Wellhead Protection Area (WHPA) means the surface and subsurface area surrounding a well or well field that supplies a public water system through which contaminants are likely to pass and eventually reach the water well or well field.

Western Hemisphere Shorebird Reserve Network (WHSRN) site means an area that contains migratory shorebird concentrations and has been designated as a hemispheric reserve, international reserve, regional reserve, or endangered species reserve. Hemispheric reserves host at least 500,000 shorebirds annually or 30% of a species flyway population. International reserves host 100,000 shorebirds annually or 15% of a species flyway population. Regional reserves host 20,000 shorebirds annually or 5% of a species flyway population. Endangered species reserves are critical to the survival of endangered species and no minimum number of birds is required.

[Amdt. 195–71, 65 FR 80544, Dec. 21, 2000]

§ 195.8 Transportation of hazardous liquid or carbon dioxide in pipelines constructed with other than steel pipe.

No person may transport any hazardous liquid or carbon dioxide through a pipe that is constructed after October 1, 1970, for hazardous liquids or after July 12, 1991 for carbon dioxide of material other than steel unless the person has notified the Administrator in writing at least 90 days before the transportation is to begin. The notice must state whether carbon dioxide or a hazardous liquid is to be transported and the chemical name, common name, properties and characteristics of the hazardous liquid to be transported and the material used in construction of the pipeline. If the Administrator determines that the transportation of the hazardous liquid or carbon dioxide in the manner proposed would be unduly hazardous, he will, within 90 days after receipt of the notice, order the person that gave the notice, in writing, not to transport the hazardous liquid or carbon dioxide in the proposed manner until further notice.

[Amdt. 195–45, 56 FR 26925, June 12, 1991, as amended by Amdt. 195–50, 59 FR 17281, Apr. 12, 1994]

§ 195.9 Outer continental shelf pipelines.

Operators of transportation pipelines on the Outer Continental Shelf must identify on all their respective pipelines the specific points at which operating responsibility transfers to a producing operator. For those instances in which the transfer points are not identifiable by a durable marking, each operator will have until September 15, 1998 to identify the transfer points. If it is not practicable to durably mark a

transfer point and the transfer point is located above water, the operator must depict the transfer point on a schematic maintained near the transfer point. If a transfer point is located subsea, the operator must identify the transfer point on a schematic which must be maintained at the nearest upstream facility and provided to PHMSA upon request. For those cases in which adjoining operators have not agreed on a transfer point by September 15, 1998 the Regional Director and the MMS Regional Supervisor will make a joint determination of the transfer point.

[Amdt. 195–59, 62 FR 61695, Nov. 19, 1997, as amended at 70 FR 11140, Mar. 8, 2005]

§ 195.10 Responsibility of operator for compliance with this part.

An operator may make arrangements with another person for the performance of any action required by this part. However, the operator is not thereby relieved from the responsibility for compliance with any requirement of this part.

§ 195.11 What is a regulated rural gathering line and what requirements apply?

Each operator of a regulated rural gathering line, as defined in paragraph (a) of this section, must comply with the safety requirements described in paragraph (b) of this section.

(a) *Definition.* As used in this section, a regulated rural gathering line means an onshore gathering line in a rural area that meets all of the following criteria—

(1) Has a nominal diameter from 6⅝ inches (168 mm) to 8⅝ inches (219.1 mm);

(2) Is located in or within one-quarter mile (.40 km) of an unusually sensitive area as defined in § 195.6; and

(3) Operates at a maximum pressure established under § 195.406 corresponding to—

(i) A stress level greater than 20-percent of the specified minimum yield strength of the line pipe; or

(ii) If the stress level is unknown or the pipeline is not constructed with steel pipe, a pressure of more than 125 psi (861 kPa) gage.

(b) *Safety requirements.* Each operator must prepare, follow, and maintain written procedures to carry out the requirements of this section. Except for the requirements in paragraphs (b)(2), (b)(3), (b)(9) and (b)(10) of this section, the safety requirements apply to all materials of construction.

(1) Identify all segments of pipeline meeting the criteria in paragraph (a) of this section before April 3, 2009.

(2) For steel pipelines constructed, replaced, relocated, or otherwise changed after July 3, 2009, design, install, construct, initially inspect, and initially test the pipeline in compliance with this part, unless the pipeline is converted under § 195.5.

(3) For non-steel pipelines constructed after July 3, 2009, notify the Administrator according to § 195.8.

(4) Beginning no later than January 3, 2009, comply with the reporting requirements in subpart B of this part.

(5) Establish the maximum operating pressure of the pipeline according to § 195.406 before transportation begins, or if the pipeline exists on July 3, 2008, before July 3, 2009.

(6) Install line markers according to § 195.410 before transportation begins, or if the pipeline exists on July 3, 2008, before July 3, 2009. Continue to maintain line markers in compliance with § 195.410.

(7) Establish a continuing public education program in compliance with § 195.440 before transportation begins, or if the pipeline exists on July 3, 2008, before January 3, 2010. Continue to carry out such program in compliance with § 195.440.

(8) Establish a damage prevention program in compliance with § 195.442 before transportation begins, or if the pipeline exists on July 3, 2008, before July 3, 2009. Continue to carry out such program in compliance with § 195.442.

(9) For steel pipelines, comply with subpart H of this part, except corrosion control is not required for pipelines existing on July 3, 2008 before July 3, 2011.

(10) For steel pipelines, establish and follow a comprehensive and effective program to continuously identify operating conditions that could contribute to internal corrosion. The program must include measures to prevent and mitigate internal corrosion, such as

cleaning the pipeline and using inhibitors. This program must be established before transportation begins or if the pipeline exists on July 3, 2008, before July 3, 2009.

(11) To comply with the Operator Qualification program requirements in subpart G of this part, have a written description of the processes used to carry out the requirements in § 195.505 to determine the qualification of persons performing operations and maintenance tasks. These processes must be established before transportation begins or if the pipeline exists on July 3, 2008, before July 3, 2009.

(c) *New unusually sensitive areas.* If, after July 3, 2008, a new unusually sensitive area is identified and a segment of pipeline becomes regulated as a result, except for the requirements of paragraphs (b)(9) and (b)(10) of this section, the operator must implement the requirements in paragraphs (b)(2) through (b)(11) of this section for the affected segment within 6 months of identification. For steel pipelines, comply with the deadlines in paragraph (b)(9) and (b)(10).

(d) *Record Retention.* An operator must maintain records demonstrating compliance with each requirement according to the following schedule.

(1) An operator must maintain the segment identification records required in paragraph (b)(1) of this section and the records required to comply with (b)(10) of this section, for the life of the pipe.

(2) An operator must maintain the records necessary to demonstrate compliance with each requirement in paragraphs (b)(2) through (b)(9), and (b)(11) of this section according to the record retention requirements of the referenced section or subpart.

[73 FR 31644, June 3, 2008]

§ 195.12 What requirements apply to low-stress pipelines in rural areas?

(a) *General.* This Section sets forth the requirements for each category of low-stress pipeline in a rural area set forth in paragraph (b) of this Section. This Section does not apply to a rural low-stress pipeline regulated under this Part as a low-stress pipeline that crosses a waterway currently used for commercial navigation; these pipelines are regulated pursuant to § 195.1(a)(2).

(b) *Categories.* An operator of a rural low-stress pipeline must meet the applicable requirements and compliance deadlines for the category of pipeline set forth in paragraph (c) of this Section. For purposes of this Section, a rural low-stress pipeline is a Category 1, 2, or 3 pipeline based on the following criteria:

(1) A Category 1 rural low-stress pipeline:

(i) Has a nominal diameter of 8⅝ inches (219.1 mm) or more;

(ii) Is located in or within one-half mile (.80 km) of an unusually sensitive area (USA) as defined in § 195.6; and

(iii) Operates at a maximum pressure established under § 195.406 corresponding to:

(A) A stress level equal to or less than 20-percent of the specified minimum yield strength of the line pipe; or

(B) If the stress level is unknown or the pipeline is not constructed with steel pipe, a pressure equal to or less than 125 psi (861 kPa) gauge.

(2) A Category 2 rural pipeline:

(i) Has a nominal diameter of less than 8⅝ inches (219.1mm);

(ii) Is located in or within one-half mile (.80 km) of an unusually sensitive area (USA) as defined in § 195.6; and

(iii) Operates at a maximum pressure established under § 195.406 corresponding to:

(A) A stress level equal to or less than 20-percent of the specified minimum yield strength of the line pipe; or

(B) If the stress level is unknown or the pipeline is not constructed with steel pipe, a pressure equal to or less than 125 psi (861 kPa) gage.

(3) A Category 3 rural low-stress pipeline:

(i) Has a nominal diameter of any size and is not located in or within one-half mile (.80 km) of an unusually sensitive area (USA) as defined in § 195.6; and

(ii) Operates at a maximum pressure established under § 195.406 corresponding to a stress level equal to or less than 20-percent of the specified minimum yield strength of the line pipe; or

(iii) If the stress level is unknown or the pipeline is not constructed with

steel pipe, a pressure equal to or less than 125 psi (861 kPa) gage.

(c) *Applicable requirements and deadlines for compliance.* An operator must comply with the following compliance dates depending on the category of pipeline determined by the criteria in paragraph (b):

(1) An operator of a Category 1 pipeline must:

(i) Identify all segments of pipeline meeting the criteria in paragraph (b)(1) of this Section before April 3, 2009.

(ii) Beginning no later than January 3, 2009, comply with the reporting requirements of Subpart B for the identified segments.

(iii) IM requirements—

(A) Establish a written program that complies with §195.452 before July 3, 2009, to assure the integrity of the pipeline segments. Continue to carry out such program in compliance with §195.452.

(B) An operator may conduct a determination per §195.452(a) in lieu of the one-half mile buffer.

(C) Complete the baseline assessment of all segments in accordance with §195.452(c) before July 3, 2015, and complete at least 50-percent of the assessments, beginning with the highest risk pipe, before January 3, 2012.

(iv) Comply with all other safety requirements of this Part, except Subpart H, before July 3, 2009. Comply with the requirements of Subpart H before July 3, 2011.

(2) An operator of a Category 2 pipeline must:

(i) Identify all segments of pipeline meeting the criteria in paragraph (b)(2) of this Section before July 1, 2012.

(ii) Beginning no later than January 3, 2009, comply with the reporting requirements of Subpart B for the identified segments.

(iii) IM—

(A) Establish a written IM program that complies with §195.452 before October 1, 2012 to assure the integrity of the pipeline segments. Continue to carry out such program in compliance with §195.452.

(B) An operator may conduct a determination per §195.452(a) in lieu of the one-half mile buffer.

(C) Complete the baseline assessment of all segments in accordance with §195.452(c) before October 1, 2016 and complete at least 50-percent of the assessments, beginning with the highest risk pipe, before April 1, 2014.

(iv) Comply with all other safety requirements of this Part, except Subpart H, before October 1, 2012. Comply with Subpart H of this Part before October 1, 2014.

(3) An operator of a Category 3 pipeline must:

(i) Identify all segments of pipeline meeting the criteria in paragraph (b)(3) of this Section before July 1, 2012.

(ii) Beginning no later than January 3, 2009, comply with the reporting requirements of Subpart B for the identified segments.

(A)(iii) Comply with all safety requirements of this Part, except the requirements in §195.452, Subpart B, and the requirements in Subpart H, before October 1, 2012. Comply with Subpart H of this Part before October 1, 2014.

(d) *Economic compliance burden.*

(1) An operator may notify PHMSA in accordance with §195.452(m) of a situation meeting the following criteria:

(i) The pipeline is a Category 1 rural low-stress pipeline;

(ii) The pipeline carries crude oil from a production facility;

(iii) The pipeline, when in operation, operates at a flow rate less than or equal to 14,000 barrels per day; and

(iv) The operator determines it would abandon or shut-down the pipeline as a result of the economic burden to comply with the assessment requirements in §195.452(d) or 195.452(j).

(2) A notification submitted under this provision must include, at minimum, the following information about the pipeline: its operating, maintenance and leak history; the estimated cost to comply with the integrity assessment requirements (with a brief description of the basis for the estimate); the estimated amount of production from affected wells per year, whether wells will be shut in or alternate transportation used, and if alternate transportation will be used, the estimated cost to do so.

(3) When an operator notifies PHMSA in accordance with paragraph (d)(1) of this Section, PHMSA will stay compliance with §§195.452(d) and 195.452(j)(3) until it has completed an analysis of

the notification. PHMSA will consult the Department of Energy, as appropriate, to help analyze the potential energy impact of loss of the pipeline. Based on the analysis, PHMSA may grant the operator a special permit to allow continued operation of the pipeline subject to alternative safety requirements.

(e) *Changes in unusually sensitive areas.*

(1) If, after June 3, 2008, for Category 1 rural low-stress pipelines or October 1, 2011 for Category 2 rural low-stress pipelines, an operator identifies a new USA that causes a segment of pipeline to meet the criteria in paragraph (b) of this Section as a Category 1 or Category 2 rural low-stress pipeline, the operator must:

(i) Comply with the IM program requirement in paragraph (c)(1)(iii)(A) or (c)(2)(iii)(A) of this Section, as appropriate, within 12 months following the date the area is identified regardless of the prior categorization of the pipeline; and

(ii) Complete the baseline assessment required by paragraph (c)(1)(iii)(C) or (c)(2)(iii)(C) of this Section, as appropriate, according to the schedule in § 195.452(d)(3).

(2) If a change to the boundaries of a USA causes a Category 1 or Category 2 pipeline segment to no longer be within one-half mile of a USA, an operator must continue to comply with paragraph (c)(1)(iii) or paragraph (c)(2)(iii) of this section, as applicable, with respect to that segment unless the operator determines that a release from the pipeline could not affect the USA.

(f) *Record Retention.* An operator must maintain records demonstrating compliance with each requirement applicable to the category of pipeline according to the following schedule.

(1) An operator must maintain the segment identification records required in paragraph (c)(1)(i), (c)(2)(i) or (c)(3)(i) of this Section for the life of the pipe.

(2) Except for the segment identification records, an operator must maintain the records necessary to demonstrate compliance with each applicable requirement set forth in paragraph (c) of this section according to the record retention requirements of the referenced section or subpart.

[76 FR 25587, May 5, 2011, as amended at 76 FR 43605, July 21, 2011]

Subpart B—Annual, Accident, and Safety-Related Condition Reporting

§ 195.48 Scope.

This Subpart prescribes requirements for periodic reporting and for reporting of accidents and safety-related conditions. This Subpart applies to all pipelines subject to this Part. An operator of a Category 3 rural low-stress pipeline meeting the criteria in § 195.12 is not required to complete those parts of the hazardous liquid annual report form PHMSA F 7000–1.1 associated with IM or high consequence areas.

[76 FR 25588, May 5, 2011]

§ 195.49 Annual report.

Each operator must annually complete and submit DOT Form PHMSA F 7000–1.1 for each type of hazardous liquid pipeline facility operated at the end of the previous year. An operator must submit the annual report by June 15 each year, except that for the 2010 reporting year the report must be submitted by August 15, 2011. A separate report is required for crude oil, HVL (including anhydrous ammonia), petroleum products, carbon dioxide pipelines, and fuel grade ethanol pipelines. For each state a pipeline traverses, an operator must separately complete those sections on the form requiring information to be reported for each state.

[75 FR 72907, Nov. 26, 2010]

§ 195.50 Reporting accidents.

An accident report is required for each failure in a pipeline system subject to this part in which there is a release of the hazardous liquid or carbon dioxide transported resulting in any of the following:

(a) Explosion or fire not intentionally set by the operator.

(b) Release of 5 gallons (19 liters) or more of hazardous liquid or carbon dioxide, except that no report is required for a release of less than 5 barrels (0.8

cubic meters) resulting from a pipeline maintenance activity if the release is:

(1) Not otherwise reportable under this section;

(2) Not one described in § 195.52(a)(4);

(3) Confined to company property or pipeline right-of-way; and

(4) Cleaned up promptly;

(c) Death of any person;

(d) Personal injury necessitating hospitalization;

(e) Estimated property damage, including cost of clean-up and recovery, value of lost product, and damage to the property of the operator or others, or both, exceeding $50,000.

[Amdt. 195–22, 46 FR 38360, July 27, 1981, as amended by Amdt. 195–39, 53 FR 24950, July 1, 1988; Amdt. 195–45, 56 FR 26925, June 12, 1991; Amdt. 195–52, 59 FR 33396, June 28, 1994; Amdt. 195–63, 63 FR 37506, July 13, 1998; Amdt. 195–75, 67 FR 836, Jan. 8, 2002]

§ 195.52 Immediate notice of certain accidents.

(a) Notice requirements. At the earliest practicable moment following discovery of a release of the hazardous liquid or carbon dioxide transported resulting in an event described in § 195.50, the operator of the system must give notice, in accordance with paragraph (b) of this section, of any failure that:

(1) Caused a death or a personal injury requiring hospitalization;

(2) Resulted in either a fire or explosion not intentionally set by the operator;

(3) Caused estimated property damage, including cost of cleanup and recovery, value of lost product, and damage to the property of the operator or others, or both, exceeding $50,000;

(4) Resulted in pollution of any stream, river, lake, reservoir, or other similar body of water that violated applicable water quality standards, caused a discoloration of the surface of the water or adjoining shoreline, or deposited a sludge or emulsion beneath the surface of the water or upon adjoining shorelines; or

(5) In the judgment of the operator was significant even though it did not meet the criteria of any other paragraph of this section.

(b) Information required. Each notice required by paragraph (a) of this section must be made to the National Response Center either by telephone to 800–424–8802 (in Washington, DC, 202–267–2675) or electronically at *http://www.nrc.uscg.mil* and must include the following information:

(1) Name, address and identification number of the operator.

(2) Name and telephone number of the reporter.

(3) The location of the failure.

(4) The time of the failure.

(5) The fatalities and personal injuries, if any.

(6) Initial estimate of amount of product released in accordance with paragraph (c) of this section.

(7) All other significant facts known by the operator that are relevant to the cause of the failure or extent of the damages.

(c) Calculation. A pipeline operator must have a written procedure to calculate and provide a reasonable initial estimate of the amount of released product.

(d) New information. An operator must provide an additional telephonic report to the NRC if significant new information becomes available during the emergency response phase of a reported event at the earliest practicable moment after such additional information becomes known.

[75 FR 72907, Nov. 26, 2010]

§ 195.54 Accident reports.

(a) Each operator that experiences an accident that is required to be reported under § 195.50 must, as soon as practicable, but not later than 30 days after discovery of the accident, file an accident report on DOT Form 7000–1.

(b) Whenever an operator receives any changes in the information reported or additions to the original report on DOT Form 7000–1, it shall file a supplemental report within 30 days.

[Amdt. 195–39, 53 FR 24950, July 1, 1988, as amended by Amdt. 195–95, 75 FR 72907, Nov. 26, 2010]

§ 195.55 Reporting safety-related conditions.

(a) Except as provided in paragraph (b) of this section, each operator shall report in accordance with § 195.56 the existence of any of the following safety-related conditions involving pipelines in service:

(1) General corrosion that has reduced the wall thickness to less than that required for the maximum operating pressure, and localized corrosion pitting to a degree where leakage might result.

(2) Unintended movement or abnormal loading of a pipeline by environmental causes, such as an earthquake, landslide, or flood, that impairs its serviceability.

(3) Any material defect or physical damage that impairs the serviceability of a pipeline.

(4) Any malfunction or operating error that causes the pressure of a pipeline to rise above 110 percent of its maximum operating pressure.

(5) A leak in a pipeline that constitutes an emergency.

(6) Any safety-related condition that could lead to an imminent hazard and causes (either directly or indirectly by remedial action of the operator), for purposes other than abandonment, a 20 percent or more reduction in operating pressure or shutdown of operation of a pipeline.

(b) A report is not required for any safety-related condition that—

(1) Exists on a pipeline that is more than 220 yards (200 meters) from any building intended for human occupancy or outdoor place of assembly, except that reports are required for conditions within the right-of-way of an active railroad, paved road, street, or highway, or that occur offshore or at onshore locations where a loss of hazardous liquid could reasonably be expected to pollute any stream, river, lake, reservoir, or other body of water;

(2) Is an accident that is required to be reported under § 195.50 or results in such an accident before the deadline for filing the safety-related condition report; or

(3) Is corrected by repair or replacement in accordance with applicable safety standards before the deadline for filing the safety-related condition report, except that reports are required for all conditions under paragraph (a)(1) of this section other than localized corrosion pitting on an effectively coated and cathodically protected pipeline.

[Amdt. 195–39, 53 FR 24950, July 1, 1988; 53 FR 29800, Aug. 8, 1988, as amended by Amdt. 195–63, 63 FR 37506, July 13, 1998]

§ 195.56 Filing safety-related condition reports.

(a) Each report of a safety-related condition under § 195.55(a) must be filed (received by the Administrator) in writing within 5 working days (not including Saturdays, Sundays, or Federal holidays) after the day a representative of the operator first determines that the condition exists, but not later than 10 working days after the day a representative of the operator discovers the condition. Separate conditions may be described in a single report if they are closely related. To file a report by facsimile (fax), dial (202) 366–7128.

(b) The report must be headed ''Safety-Related Condition Report'' and provide the following information:

(1) Name and principal address of operator.

(2) Date of report.

(3) Name, job title, and business telephone number of person submitting the report.

(4) Name, job title, and business telephone number of person who determined that the condition exists.

(5) Date condition was discovered and date condition was first determined to exist.

(6) Location of condition, with reference to the State (and town, city, or county) or offshore site, and as appropriate nearest street address, offshore platform, survey station number, milepost, landmark, or name of pipeline.

(7) Description of the condition, including circumstances leading to its discovery, any significant effects of the condition on safety, and the name of the commodity transported or stored.

(8) The corrective action taken (including reduction of pressure or shutdown) before the report is submitted and the planned follow-up or future

corrective action, including the anticipated schedule for starting and concluding such action.

[Amdt. 195–39, 53 FR 24950, July 1, 1988; 53 FR 29800, Aug. 8, 1988, as amended by Amdt. 195–42, 54 FR 32344, Aug. 7, 1989; Amdt. 195–44, 54 FR 40878, Oct. 4, 1989; Amdt. 195–50, 59 FR 17281, Apr. 12, 1994; Amdt. 195–61, 63 FR 7723, Feb. 17, 1998]

§ 195.57 Filing offshore pipeline condition reports.

(a) Each operator shall, within 60 days after completion of the inspection of all its underwater pipelines subject to § 195.413(a), report the following information:

(1) Name and principal address of operator.

(2) Date of report.

(3) Name, job title, and business telephone number of person submitting the report.

(4) Total number of miles (kilometers) of pipeline inspected.

(5) Length and date of installation of each exposed pipeline segment, and location; including, if available, the location according to the Minerals Management Service or state offshore area and block number tract.

(6) Length and date of installation of each pipeline segment, if different from a pipeline segment identified under paragraph (a)(5) of this section, that is a hazard to navigation, and the location; including, if available, the location according to the Minerals Management Service or state offshore area and block number tract.

(b) The report shall be mailed to the Office of Pipeline Safety, Pipeline and Hazardous Materials Safety Administration, Department of Transportation, Information Resources Manager, PHP–10, 1200 New Jersey Avenue, SE., Washington, DC 20590.

[Amdt. 195–47, 56 FR 63771, Dec. 5, 1991, as amended by Amdt. 195–63, 63 FR 37506, July 13, 1998; 70 FR 11140, Mar. 8, 2005; 73 FR 16570, Mar. 28, 2008; 74 FR 2894, Jan. 16, 2009]

§ 195.58 Report submission requirements.

(a) *General*. Except as provided in paragraph (b) of this section, an operator must submit each report required by this part electronically to PHMSA at h*ttp://opsweb.phmsa.dot.gov* unless an alternative reporting method is authorized in accordance with paragraph (d) of this section.

(b) *Exceptions*. An operator is not required to submit a safety-related condition report (§ 195.56) or an offshore pipeline condition report (§ 195.67) electronically.

(c) *Safety-related conditions*. An operator must submit concurrently to the applicable State agency a safety-related condition report required by § 195.55 for an intrastate pipeline or when the State agency acts as an agent of the Secretary with respect to interstate pipelines.

(d) *Alternate Reporting Method*. If electronic reporting imposes an undue burden and hardship, the operator may submit a written request for an alternative reporting method to the Information Resources Manager, Office of Pipeline Safety, Pipeline and Hazardous Materials Safety Administration, PHP–20, 1200 New Jersey Avenue, SE., Washington DC 20590. The request must describe the undue burden and hardship. PHMSA will review the request and may authorize, in writing, an alternative reporting method. An authorization will state the period for which it is valid, which may be indefinite. An operator must contact PHMSA at 202–366–8075, or electronically to ''*informationresourcesmanager@dot.gov*'' to make arrangements for submitting a report that is due after a request for alternative reporting is submitted but before an authorization or denial is received.

[Amdt. 195–95, 75 FR 72907, Nov. 26, 2010]

§ 195.59 Abandonment or deactivation of facilities.

For each abandoned offshore pipeline facility or each abandoned onshore pipeline facility that crosses over, under or through a commercially navigable waterway, the last operator of that facility must file a report upon abandonment of that facility.

(a) The preferred method to submit data on pipeline facilities abandoned after October 10, 2000 is to the National Pipeline Mapping System (NPMS) in accordance with the NPMS ''Standards for Pipeline and Liquefied Natural Gas Operator Submissions.'' To obtain a

copy of the NPMS Standards, please refer to the NPMS homepage at *http://www.npms.phmsa.dot.gov* or contact the NPMS National Repository at 703–317–3073. A digital data format is preferred, but hard copy submissions are acceptable if they comply with the NPMS Standards. In addition to the NPMS-required attributes, operators must submit the date of abandonment, diameter, method of abandonment, and certification that, to the best of the operator's knowledge, all of the reasonably available information requested was provided and, to the best of the operator's knowledge, the abandonment was completed in accordance with applicable laws. Refer to the NPMS Standards for details in preparing your data for submission. The NPMS Standards also include details of how to submit data. Alternatively, operators may submit reports by mail, fax or e-mail to the Office of Pipeline Safety, Pipeline and Hazardous Materials Safety Administration, U.S. Department of Transportation, Information Resources Manager, PHP–10, 1200 New Jersey Avenue, SE., Washington, DC 20590-0001; fax (202) 366–4566; e-mail, ''*InformationResourcesManager@phmsa.dot.gov*. The information in the report must contain all reasonably available information related to the facility, including information in the possession of a third party. The report must contain the location, size, date, method of abandonment, and a certification that the facility has been abandoned in accordance with all applicable laws.

(b) [Reserved]

[Amdt. 195–69, 65 FR 54444, Sept. 8, 2000, as amended at 70 FR 11140, Mar. 8, 2005; Amdt. 195–86, 72 FR 4657, Feb. 1, 2007; 73 FR 16570, Mar. 28, 2008; 74 FR 2894, Jan. 16, 2009]

§ 195.60 Operator assistance in investigation.

If the Department of Transportation investigates an accident, the operator involved shall make available to the representative of the Department all records and information that in any way pertain to the accident, and shall afford all reasonable assistance in the investigation of the accident.

§ 195.63 OMB control number assigned to information collection.

The control numbers assigned by the Office of Management and Budget to the hazardous liquid pipeline information collection pursuant to the Paperwork Reduction Act are 2137–0047, 2137–0601, 2137–0604, 2137–0605, 2137–0618, and 2137–0622.

[Amdt. 195–95, 75 FR 72907, Nov. 26, 2010]

§ 195.64 National Registry of Pipeline and LNG Operators.

(a) OPID Request. Effective January 1, 2012, each operator of a hazardous liquid pipeline or pipeline facility must obtain from PHMSA an Operator Identification Number (OPID). An OPID is assigned to an operator for the pipeline or pipeline system for which the operator has primary responsibility. To obtain an OPID or a change to an OPID, an operator must complete an OPID Assignment Request DOT Form PHMSA F 1000.1 through the National Registry of Pipeline and LNG Operators in accordance with § 195.58.

(b) OPID validation. An operator who has already been assigned one or more OPID by January 1, 2011 must validate the information associated with each such OPID through the National Registry of Pipeline and LNG Operators at *http://opsweb.phmsa.dot.gov*, and correct that information as necessary, no later than June 30, 2012.

(c) Changes. Each operator must notify PHMSA electronically through the National Registry of Pipeline and LNG Operators at *http://opsweb.phmsa.dot.gov*, of certain events.

(1) An operator must notify PHMSA of any of the following events not later than 60 days before the event occurs:

(i) Construction or any planned rehabilitation, replacement, modification, upgrade, uprate, or update of a facility, other than a section of line pipe, that costs $10 million or more. If 60 day notice is not feasible because of an emergency, an operator must notify PHMSA as soon as practicable;

(ii) Construction of 10 or more miles of a new hazardous liquid pipeline; or

(iii) Construction of a new pipeline facility.

(2) An operator must notify PHMSA of any following event not later than 60 days after the event occurs:

(i) A change in the primary entity responsible (i.e., with an assigned OPID) for managing or administering a safety program required by this part covering pipeline facilities operated under multiple OPIDs.

(ii) A change in the name of the operator;

(iii) A change in the entity (*e.g.*, company, municipality) responsible for operating an existing pipeline, pipeline segment, or pipeline facility;

(iv) The acquisition or divestiture of 50 or more miles of pipeline or pipeline system subject to this part; or

(v) The acquisition or divestiture of an existing pipeline facility subject to this part.

(d) Reporting. An operator must use the OPID issued by PHMSA for all reporting requirements covered under this subchapter and for submissions to the National Pipeline Mapping System.

[Amdt. 195–95, 75 FR 72907, Nov. 26, 2010]

Subpart C—Design Requirements

§ 195.100 Scope.

This subpart prescribes minimum design requirements for new pipeline systems constructed with steel pipe and for relocating, replacing, or otherwise changing existing systems constructed with steel pipe. However, it does not apply to the movement of line pipe covered by § 195.424.

§ 195.101 Qualifying metallic components other than pipe.

Notwithstanding any requirement of the subpart which incorporates by reference an edition of a document listed in § 195.3, a metallic component other than pipe manufactured in accordance with any other edition of that document is qualified for use if—

(a) It can be shown through visual inspection of the cleaned component that no defect exists which might impair the strength or tightness of the component: and

(b) The edition of the document under which the component was manufactured has equal or more stringent requirements for the following as an edition of that document currently or previously listed in § 195.3:

(1) Pressure testing;

(2) Materials; and

(3) Pressure and temperature ratings.

[Amdt. 195–28, 48 FR 30639, July 5, 1983]

§ 195.102 Design temperature.

(a) Material for components of the system must be chosen for the temperature environment in which the components will be used so that the pipeline will maintain its structural integrity.

(b) Components of carbon dioxide pipelines that are subject to low temperatures during normal operation because of rapid pressure reduction or during the initial fill of the line must be made of materials that are suitable for those low temperatures.

[Admt. 195–45, 56 FR 26925, June 12, 1991]

§ 195.104 Variations in pressure.

If, within a pipeline system, two or more components are to be connected at a place where one will operate at a higher pressure than another, the system must be designed so that any component operating at the lower pressure will not be overstressed.

§ 195.106 Internal design pressure.

(a) Internal design pressure for the pipe in a pipeline is determined in accordance with the following formula:

$$P=(2St/D)\times E\times F$$

P=Internal design pressure in p.s.i. (kPa) gage.

S=Yield strength in pounds per square inch (kPa) determined in accordance with paragraph (b) of this section.

t=Nominal wall thickness of the pipe in inches (millimeters). If this is unknown, it is determined in accordance with paragraph (c) of this section.

D=Nominal outside diameter of the pipe in inches (millimeters).

E=Seam joint factor determined in accordance with paragraph (e) of this section.

F=A design factor of 0.72, except that a design factor of 0.60 is used for pipe, including risers, on a platform located offshore or on a platform in inland navigable waters, and 0.54 is used for pipe that has been subjected to cold expansion to meet the specified minimum yield strength and is subsequently heated, other than by welding or stress relieving as a part of welding, to a temperature higher than

900 °F (482 °C) for any period of time or over 600 °F (316 °C) for more than 1 hour.

(b) The yield strength to be used in determining the internal design pressure under paragraph (a) of this section is the specified minimum yield strength. If the specified minimum yield strength is not known, the yield strength to be used in the design formula is one of the following:

(1)(i) The yield strength determined by performing all of the tensile tests of API Specification 5L on randomly selected specimens with the following number of tests:

Pipe size	No. of tests
Less than 6⅝ in (168 mm) nominal outside diameter.	One test for each 200 lengths.
6⅝ in through 12¾ in (168 mm through 324 mm) nominal outside diameter.	One test for each 100 lengths.
Larger than 12¾ in (324 mm) nominal outside diameter.	One test for each 50 lengths.

(ii) If the average yield-tensile ratio exceeds 0.85, the yield strength shall be taken as 24,000 p.s.i. (165,474 kPa). If the average yield-tensile ratio is 0.85 or less, the yield strength of the pipe is taken as the lower of the following:

(A) Eighty percent of the average yield strength determined by the tensile tests.

(B) The lowest yield strength determined by the tensile tests.

(2) If the pipe is not tensile tested as provided in paragraph (b) of this section, the yield strength shall be taken as 24,000 p.s.i. (165,474 kPa).

(c) If the nominal wall thickness to be used in determining internal design pressure under paragraph (a) of this section is not known, it is determined by measuring the thickness of each piece of pipe at quarter points on one end. However, if the pipe is of uniform grade, size, and thickness, only 10 individual lengths or 5 percent of all lengths, whichever is greater, need be measured. The thickness of the lengths that are not measured must be verified by applying a gage set to the minimum thickness found by the measurement. The nominal wall thickness to be used is the next wall thickness found in commercial specifications that is below the average of all the measurements taken. However, the nominal wall thickness may not be more than 1.14 times the smallest measurement taken on pipe that is less than 20 inches (508 mm) nominal outside diameter, nor more than 1.11 times the smallest measurement taken on pipe that is 20 inches (508 mm) or more in nominal outside diameter.

(d) The minimum wall thickness of the pipe may not be less than 87.5 percent of the value used for nominal wall thickness in determining the internal design pressure under paragraph (a) of this section. In addition, the anticipated external loads and external pressures that are concurrent with internal pressure must be considered in accordance with §§ 195.108 and 195.110 and, after determining the internal design pressure, the nominal wall thickness must be increased as necessary to compensate for these concurrent loads and pressures.

(e) The seam joint factor used in paragraph (a) of this section is determined in accordance with the following table:

Specification	Pipe class	Seam joint factor
ASTM A53	Seamless	1.00
	Electric resistance welded	1.00
	Furnace lap welded	0.80
	Furnace butt welded	0.60
ASTM A106	Seamless	1.00
ASTM A 333/ A 333M.	Seamless	1.00
	Welded	1.00
ASTM A381	Double submerged arc welded	1.00
ASTM A671	Electric-fusion-welded	1.00
ASTM A672	Electric-fusion-welded	1.00
ASTM A691	Electric-fusion-welded	1.00
API 5L	Seamless	1.00
	Electric resistance welded	1.00
	Electric flash welded	1.00
	Submerged arc welded	1.00
	Furnace lap welded	0.80
	Furnace butt welded	0.60

The seam joint factor for pipe which is not covered by this paragraph must be approved by the Administrator.

[Amdt. 195–22, 46 FR 38360, July 27, 1981; 47 FR 32721, July 29, 1982, as amended by Amdt. 195–30, 49 FR 7569, Mar. 1, 1984; Amdt. 195–37, 51 FR 15335, Apr. 23, 1986; Amdt. 195–40, 54 FR 5628, Feb. 6, 1989; 58 FR 14524, Mar. 18, 1993; Amdt. 195–50, 59 FR 17281, Apr. 12, 1994; Amdt. 195–52, 59 FR 33396, 33397, June 28, 1994; Amdt. 195–63, 63 FR 37506, July 13, 1998]

§ 195.108 External pressure.

Any external pressure that will be exerted on the pipe must be provided for in designing a pipeline system.

§ 195.110 External loads.

(a) Anticipated external loads (e.g.), earthquakes, vibration, thermal expansion, and contraction must be provided for in designing a pipeline system. In providing for expansion and flexibility, section 419 of ASME/ANSI B31.4 must be followed.

(b) The pipe and other components must be supported in such a way that the support does not cause excess localized stresses. In designing attachments to pipe, the added stress to the wall of the pipe must be computed and compensated for.

[Amdt. 195–22, 46 FR 38360, July 27, 1981, as amended at 58 FR 14524, Mar. 18, 1993]

§ 195.111 Fracture propagation.

A carbon dioxide pipeline system must be designed to mitigate the effects of fracture propagation.

[Amdt. 195–45, 56 FR 26926, June 12, 1991]

§ 195.112 New pipe.

Any new pipe installed in a pipeline system must comply with the following:

(a) The pipe must be made of steel of the carbon, low alloy-high strength, or alloy type that is able to withstand the internal pressures and external loads and pressures anticipated for the pipeline system.

(b) The pipe must be made in accordance with a written pipe specification that sets forth the chemical requirements for the pipe steel and mechanical tests for the pipe to provide pipe suitable for the use intended.

(c) Each length of pipe with a nominal outside diameter of 4 ½ in (114.3 mm) or more must be marked on the pipe or pipe coating with the specification to which it was made, the specified minimum yield strength or grade, and the pipe size. The marking must be applied in a manner that does not damage the pipe or pipe coating and must remain visible until the pipe is installed.

[Amdt. 195–22, 46 FR 38360, July 27, 1981, as amended by Amdt. 195–52, 59 FR 33396, June 28, 1994; Amdt. 195–63, 63 FR 37506, July 13, 1998]

§ 195.114 Used pipe.

Any used pipe installed in a pipeline system must comply with § 195.112 (a) and (b) and the following:

(a) The pipe must be of a known specification and the seam joint factor must be determined in accordance with § 195.106(e). If the specified minimum yield strength or the wall thickness is not known, it is determined in accordance with § 195.106 (b) or (c) as appropriate.

(b) There may not be any:

(1) Buckles;

(2) Cracks, grooves, gouges, dents, or other surface defects that exceed the maximum depth of such a defect permitted by the specification to which the pipe was manufactured; or

(3) Corroded areas where the remaining wall thickness is less than the minimum thickness required by the tolerances in the specification to which the pipe was manufactured.

However, pipe that does not meet the requirements of paragraph (b)(3) of this section may be used if the operating pressure is reduced to be commensurate with the remaining wall thickness.

[Amdt. 195–22, 46 FR 38360, July 27, 1981; 47 FR 32721, July 29, 1982]

§ 195.116 Valves.

Each valve installed in a pipeline system must comply with the following:

(a) The valve must be of a sound engineering design.

(b) Materials subject to the internal pressure of the pipeline system, including welded and flanged ends, must be compatible with the pipe or fittings to which the valve is attached.

(c) Each part of the valve that will be in contact with the carbon dioxide or hazardous liquid stream must be made of materials that are compatible with carbon dioxide or each hazardous liquid that it is anticipated will flow through the pipeline system.

(d) Each valve must be both hydrostatically shell tested and hydrostatically seat tested without leakage to at least the requirements set forth in Section 11 of API Standard 6D (incorporated by reference, *see* § 195.3).

(e) Each valve other than a check valve must be equipped with a means for clearly indicating the position of the valve (open, closed, etc.).

(f) Each valve must be marked on the body or the nameplate, with at least the following:

(1) Manufacturer's name or trademark.

(2) Class designation or the maximum working pressure to which the valve may be subjected.

(3) Body material designation (the end connection material, if more than one type is used).

(4) Nominal valve size.

[Amdt. 195–22, 46 FR 38360, July 27, 1981 as amended by Amdt. 195–45, 56 FR 26926, June 12, 1991; Amdt. 195–86, 71 FR 33410, June 9, 2006; Amdt. 195–94, 75 FR 48606, Aug. 11, 2010]

§ 195.118 Fittings.

(a) Butt-welding type fittings must meet the marking, end preparation, and the bursting strength requirements of ASME/ANSI B16.9 or MSS Standard Practice SP–75.

(b) There may not be any buckles, dents, cracks, gouges, or other defects in the fitting that might reduce the strength of the fitting.

(c) The fitting must be suitable for the intended service and be at least as strong as the pipe and other fittings in the pipeline system to which it is attached.

[Amdt. 195–22, 46 FR 38360, July 27, 1981; 47 FR 32721, July 29, 1982, as amended at 58 FR 14524, Mar. 18, 1993]

§ 195.120 Passage of internal inspection devices.

(a) Except as provided in paragraphs (b) and (c) of this section, each new pipeline and each line section of a pipeline where the line pipe, valve, fitting or other line component is replaced; must be designed and constructed to accommodate the passage of instrumented internal inspection devices.

(b) This section does not apply to:

(1) Manifolds;

(2) Station piping such as at pump stations, meter stations, or pressure reducing stations;

(3) Piping associated with tank farms and other storage facilities;

(4) Cross-overs;

(5) Sizes of pipe for which an instrumented internal inspection device is not commercially available;

(6) Offshore pipelines, other than main lines 10 inches (254 millimeters) or greater in nominal diameter, that transport liquids to onshore facilities; and

(7) Other piping that the Administrator under § 190.9 of this chapter, finds in a particular case would be impracticable to design and construct to accommodate the passage of instrumented internal inspection devices.

(c) An operator encountering emergencies, construction time constraints and other unforeseen construction problems need not construct a new or replacement segment of a pipeline to meet paragraph (a) of this section, if the operator determines and documents why an impracticability prohibits compliance with paragraph (a) of this section. Within 30 days after discovering the emergency or construction problem the operator must petition, under § 190.9 of this chapter, for approval that design and construction to accommodate passage of instrumented internal inspection devices would be impracticable. If the petition is denied, within 1 year after the date of the notice of the denial, the operator must modify that segment to allow passage of instrumented internal inspection devices.

[Amdt. 195–50, 59 FR 17281, Apr. 12, 1994, as amended by Amdt. 195–63, 63 FR 37506, July 13, 1998]

§ 195.122 Fabricated branch connections.

Each pipeline system must be designed so that the addition of any fabricated branch connections will not reduce the strength of the pipeline system.

§ 195.124 Closures.

Each closure to be installed in a pipeline system must comply with the ASME Boiler and Pressure Vessel Code, section VIII, Pressure Vessels, Division

1, and must have pressure and temperature ratings at least equal to those of the pipe to which the closure is attached.

§ 195.126 Flange connection.

Each component of a flange connection must be compatible with each other component and the connection as a unit must be suitable for the service in which it is to be used.

§ 195.128 Station piping.

Any pipe to be installed in a station that is subject to system pressure must meet the applicable requirements of this subpart.

§ 195.130 Fabricated assemblies.

Each fabricated assembly to be installed in a pipeline system must meet the applicable requirements of this subpart.

§ 195.132 Design and construction of aboveground breakout tanks.

(a) Each aboveground breakout tank must be designed and constructed to withstand the internal pressure produced by the hazardous liquid to be stored therein and any anticipated external loads.

(b) For aboveground breakout tanks first placed in service after October 2, 2000, compliance with paragraph (a) of this section requires one of the following:

(1) Shop-fabricated, vertical, cylindrical, closed top, welded steel tanks with nominal capacities of 90 to 750 barrels (14.3 to 119.2 m^3) and with internal vapor space pressures that are approximately atmospheric must be designed and constructed in accordance with API Specification 12F.

(2) Welded, low-pressure (i.e., internal vapor space pressure not greater than 15 psig (103.4 kPa)), carbon steel tanks that have wall shapes that can be generated by a single vertical axis of revolution must be designed and constructed in accordance with API Standard 620.

(3) Vertical, cylindrical, welded steel tanks with internal pressures at the tank top approximating atmospheric pressures (i.e., internal vapor space pressures not greater than 2.5 psig (17.2 kPa), or not greater than the pressure developed by the weight of the tank roof) must be designed and constructed in accordance with API Standard 650.

(4) High pressure steel tanks (i.e., internal gas or vapor space pressures greater than 15 psig (103.4 kPa)) with a nominal capacity of 2000 gallons (7571 liters) or more of liquefied petroleum gas (LPG) must be designed and constructed in accordance with API Standard 2510.

[Amdt. 195–66, 64 FR 15935, Apr. 2, 1999]

§ 195.134 CPM leak detection.

This section applies to each hazardous liquid pipeline transporting liquid in single phase (without gas in the liquid). On such systems, each new computational pipeline monitoring (CPM) leak detection system and each replaced component of an existing CPM system must comply with section 4.2 of API 1130 in its design and with any other design criteria addressed in API 1130 for components of the CPM leak detection system.

[Amdt. 195–62, 63 FR 36376, July 6, 1998]

Subpart D—Construction

§ 195.200 Scope.

This subpart prescribes minimum requirements for constructing new pipeline systems with steel pipe, and for relocating, replacing, or otherwise changing existing pipeline systems that are constructed with steel pipe. However, this subpart does not apply to the movement of pipe covered by § 195.424.

§ 195.202 Compliance with specifications or standards.

Each pipeline system must be constructed in accordance with comprehensive written specifications or standards that are consistent with the requirements of this part.

§ 195.204 Inspection—general.

Inspection must be provided to ensure the installation of pipe or pipeline systems in accordance with the requirements of this subpart. No person may be used to perform inspections unless that person has been trained and is

qualified in the phase of construction to be inspected.

[Amdt. 195–22, 46 FR 38360, July 27, 1981, as amended by Amdt. 195–52, 59 FR 33397, June 28, 1994]

§ 195.205 Repair, alteration and reconstruction of aboveground breakout tanks that have been in service.

(a) Aboveground breakout tanks that have been repaired, altered, or reconstructed and returned to service must be capable of withstanding the internal pressure produced by the hazardous liquid to be stored therein and any anticipated external loads.

(b) After October 2, 2000, compliance with paragraph (a) of this section requires the following for the tanks specified:

(1) For tanks designed for approximately atmospheric pressure constructed of carbon and low alloy steel, welded or riveted, and non-refrigerated and tanks built to API Standard 650 or its predecessor Standard 12C, repair, alteration, and reconstruction must be in accordance with API Standard 653.

(2) For tanks built to API Specification 12F or API Standard 620, the repair, alteration, and reconstruction must be in accordance with the design, welding, examination, and material requirements of those respective standards.

(3) For high pressure tanks built to API Standard 2510, repairs, alterations, and reconstruction must be in accordance with API 510.

[Amdt. 195–66, 64 FR 15935, Apr. 2, 1999]

§ 195.206 Material inspection.

No pipe or other component may be installed in a pipeline system unless it has been visually inspected at the site of installation to ensure that it is not damaged in a manner that could impair its strength or reduce its serviceability.

§ 195.207 Transportation of pipe.

(a) *Railroad*. In a pipeline operated at a hoop stress of 20 percent or more of SMYS, an operator may not use pipe having an outer diameter to wall thickness ratio of 70 to 1, or more, that is transported by railroad unless the transportation is performed in accordance with API Recommended Practice 5L1 (incorporated by reference, *see* § 195.3).

(b) *Ship or barge*. In a pipeline operated at a hoop stress of 20 percent or more of SMYS, an operator may not use pipe having an outer diameter to wall thickness ratio of 70 to 1, or more, that is transported by ship or barge on both inland and marine waterways, unless the transportation is performed in accordance with API Recommended Practice 5LW (incorporated by reference, *see* § 195.3).

[Amdt. 195–94, 75 FR 48606, Aug. 11, 2010]

§ 195.208 Welding of supports and braces.

Supports or braces may not be welded directly to pipe that will be operated at a pressure of more than 100 p.s.i. (689 kPa) gage.

[Amdt. 195–22, 46 FR 38360, July 27, 1981, as amended by Amdt. 195–63, 63 FR 37506, July 13, 1998]

§ 195.210 Pipeline location.

(a) Pipeline right-of-way must be selected to avoid, as far as practicable, areas containing private dwellings, industrial buildings, and places of public assembly.

(b) No pipeline may be located within 50 feet (15 meters) of any private dwelling, or any industrial building or place of public assembly in which persons work, congregate, or assemble, unless it is provided with at least 12 inches (305 millimeters) of cover in addition to that prescribed in § 195.248.

[Amdt. 195–22, 46 FR 39360, July 27, 1981, as amended by Amdt. 195–63, 63 FR 37506, July 13, 1998]

§ 195.212 Bending of pipe.

(a) Pipe must not have a wrinkle bend.

(b) Each field bend must comply with the following:

(1) A bend must not impair the serviceability of the pipe.

(2) Each bend must have a smooth contour and be free from buckling, cracks, or any other mechanical damage.

(3) On pipe containing a longitudinal weld, the longitudinal weld must be as

near as practicable to the neutral axis of the bend unless—

(i) The bend is made with an internal bending mandrel; or

(ii) The pipe is 12¾ in (324 mm) or less nominal outside diameter or has a diameter to wall thickness ratio less than 70.

(c) Each circumferential weld which is located where the stress during bending causes a permanent deformation in the pipe must be nondestructively tested either before or after the bending process.

[Amdt. 195–22, 46 FR 38360, July 27, 1981, as amended by Amdt. 195–52, 59 FR 33396, June 28, 1994; Amdt. 195–63, 63 FR 37506, July 13, 1998]

§ 195.214 Welding procedures.

(a) Welding must be performed by a qualified welder in accordance with welding procedures qualified under Section 5 of API 1104 or Section IX of the ASME Boiler and Pressure Vessel Code (incorporated by reference, *see* § 195.3) . The quality of the test welds used to qualify the welding procedure shall be determined by destructive testing.

(b) Each welding procedure must be recorded in detail, including the results of the qualifying tests. This record must be retained and followed whenever the procedure is used.

[Amdt. 195–38, 51 FR 20297, June 4, 1986, as amended at Amdt. 195–81, 69 FR 32897, June 14, 2004]

§ 195.216 Welding: Miter joints.

A miter joint is not permitted (not including deflections up to 3 degrees that are caused by misalignment).

§ 195.222 Welders: Qualification of welders.

(a) Each welder must be qualified in accordance with section 6 of API 1104 (incorporated by reference, *see* § 195.3) or section IX of the ASME Boiler and Pressure Vessel Code, (incorporated by reference, *see* § 195.3) except that a welder qualified under an earlier edition than listed in § 195.3 may weld but may not re-qualify under that earlier edition.

(b) No welder may weld with a welding process unless, within the preceding 6 calendar months, the welder has—

(1) Engaged in welding with that process; and

(2) Had one welded tested and found acceptable under section 9 of API 1104 (incorporated by reference, *see* § 195.3).

[Amdt. 195–81, 69 FR 54593, Sept. 9, 2004, as amended by Amdt. 195–86, 71 FR 33409, June 9, 2006]

§ 195.224 Welding: Weather.

Welding must be protected from weather conditions that would impair the quality of the completed weld.

§ 195.226 Welding: Arc burns.

(a) Each arc burn must be repaired.

(b) An arc burn may be repaired by completely removing the notch by grinding, if the grinding does not reduce the remaining wall thickness to less than the minimum thickness required by the tolerances in the specification to which the pipe is manufactured. If a notch is not repairable by grinding, a cylinder of the pipe containing the entire notch must be removed.

(c) A ground may not be welded to the pipe or fitting that is being welded.

§ 195.228 Welds and welding inspection: Standards of acceptability.

(a) Each weld and welding must be inspected to insure compliance with the requirements of this subpart. Visual inspection must be supplemented by nondestructive testing.

(b) The acceptability of a weld is determined according to the standards in Section 9 of API 1104. However, if a girth weld is unacceptable under those standards for a reason other than a crack, and if Appendix A to API 1104 (incorporated by reference, *see* § 195.3) applies to the weld, the acceptability of the weld may be determined under that appendix.

[Amdt. 195–22, 46 FR 38360, July 27, 1981, as amended by Amdt. 195–52, 59 FR 33397, June 28, 1994; Amdt. 195–81, 69 FR 32898, June 14, 2004]

§ 195.230 Welds: Repair or removal of defects.

(a) Each weld that is unacceptable under § 195.228 must be removed or repaired. Except for welds on an offshore

pipeline being installed from a pipelay vessel, a weld must be removed if it has a crack that is more than 8 percent of the weld length.

(b) Each weld that is repaired must have the defect removed down to sound metal and the segment to be repaired must be preheated if conditions exist which would adversely affect the quality of the weld repair. After repair, the segment of the weld that was repaired must be inspected to ensure its acceptability.

(c) Repair of a crack, or of any defect in a previously repaired area must be in accordance with written weld repair procedures that have been qualified under § 195.214. Repair procedures must provide that the minimum mechanical properties specified for the welding procedure used to make the original weld are met upon completion of the final weld repair.

[Amdt. 195–29, 48 FR 48674, Oct. 20, 1983]

§ 195.234 Welds: Nondestructive testing.

(a) A weld may be nondestructively tested by any process that will clearly indicate any defects that may affect the integrity of the weld.

(b) Any nondestructive testing of welds must be performed—

(1) In accordance with a written set of procedures for nondestructive testing; and

(2) With personnel that have been trained in the established procedures and in the use of the equipment employed in the testing.

(c) Procedures for the proper interpretation of each weld inspection must be established to ensure the acceptability of the weld under § 195.228.

(d) During construction, at least 10 percent of the girth welds made by each welder during each welding day must be nondestructively tested over the entire circumference of the weld.

(e) All girth welds installed each day in the following locations must be nondestructively tested over their entire circumference, except that when nondestructive testing is impracticable for a girth weld, it need not be tested if the number of girth welds for which testing is impracticable does not exceed 10 percent of the girth welds installed that day:

(1) At any onshore location where a loss of hazardous liquid could reasonably be expected to pollute any stream, river, lake, reservoir, or other body of water, and any offshore area;

(2) Within railroad or public road rights-of-way;

(3) At overhead road crossings and within tunnels;

(4) Within the limits of any incorporated subdivision of a State government; and

(5) Within populated areas, including, but not limited to, residential subdivisions, shopping centers, schools, designated commercial areas, industrial facilities, public institutions, and places of public assembly.

(f) When installing used pipe, 100 percent of the old girth welds must be nondestructively tested.

(g) At pipeline tie-ins, including tie-ins of replacement sections, 100 percent of the girth welds must be nondestructively tested.

[Amdt. 195–22, 46 FR 38360, July 27, 1981, as amended by Amdt. 195–35, 50 FR 37192, Sept. 21, 1985; Amdt. 195–52, 59 FR 33397, June 28, 1994]

§§ 195.236–195.244 [Reserved]

§ 195.246 Installation of pipe in a ditch.

(a) All pipe installed in a ditch must be installed in a manner that minimizes the introduction of secondary stresses and the possibility of damage to the pipe.

(b) Except for pipe in the Gulf of Mexico and its inlets in waters less than 15 feet deep, all offshore pipe in water at least 12 feet deep (3.7 meters) but not more than 200 feet deep (61 meters) deep as measured from the mean low water must be installed so that the top of the pipe is below the underwater natural bottom (as determined by recognized and generally accepted practices) unless the pipe is supported by stanchions held in place by anchors or heavy concrete coating or protected by an equivalent means.

[Amdt. 195–22, 46 FR 38360, July 27, 1981, as amended by Amdt. 195–52, 59 FR 33397, June 28, 1994; 59 FR 36256, July 15, 1994; Amdt. 195–85, 69 FR 48407, Aug. 10, 2004]

§ 195.248 Cover over buried pipeline.

(a) Unless specifically exempted in this subpart, all pipe must be buried so that it is below the level of cultivation. Except as provided in paragraph (b) of this section, the pipe must be installed so that the cover between the top of the pipe and the ground level, road bed, river bottom, or underwater natural bottom (as determined by recognized and generally accepted practices), as applicable, complies with the following table:

Location	Cover inches (millimeters)	
	For normal excavation	For rock excavation [1]
Industrial, commercial, and residential areas	36 (914)	30 (762)
Crossing of inland bodies of water with a width of at least 100 feet (30 millimeters) from high water mark to high water mark	48 (1219)	18 (457)
Drainage ditches at public roads and railroads	36 (914)	36 (914)
Deepwater port safety zones	48 (1219)	24 (610)
Gulf of Mexico and its inlets in waters less than 15 feet (4.6 meters) deep as measured from mean low water	36 (914)	18 (457)
Other offshore areas under water less than 12 ft (3.7 meters) deep as measured from mean low water	36 (914)	18 (457)
Any other area	30 (762)	18 (457)

[1] Rock excavation is any excavation that requires blasting or removal by equivalent means.

(b) Except for the Gulf of Mexico and its inlets in waters less than 15 feet (4.6 meters) deep, less cover than the minimum required by paragraph (a) of this section and § 195.210 may be used if—

(1) It is impracticable to comply with the minimum cover requirements; and

(2) Additional protection is provided that is equivalent to the minimum required cover.

[Amdt. 195–22, 46 FR 38360, July 27, 1981; 47 FR 32721, July 29, 1982 as amended by Amdt. 195–52, 59 FR 33397, June 28, 1994; 59 FR 36256, July 15, 1994; Amdt. 195–63, 63 FR 37506, July 13, 1998; Amdt. 195–95, 69 FR 48407, Aug. 10, 2004]

§ 195.250 Clearance between pipe and underground structures.

Any pipe installed underground must have at least 12 inches (305 millimeters) of clearance between the outside of the pipe and the extremity of any other underground structure, except that for drainage tile the minimum clearance may be less than 12 inches (305 millimeters) but not less than 2 inches (51 millimeters). However, where 12 inches (305 millimeters) of clearance is impracticable, the clearance may be reduced if adequate provisions are made for corrosion control.

[Amdt. 195–22, 46 FR 38360, July 27, 1981, as amended by Amdt. 195–63, 63 FR 37506, July 13, 1998]

§ 195.252 Backfilling.

When a ditch for a pipeline is backfilled, it must be backfilled in a manner that:

(a) Provides firm support under the pipe; and

(b) Prevents damage to the pipe and pipe coating from equipment or from the backfill material.

[Amdt. 195–78, 68 FR 53528, Sept. 11, 2003]

§ 195.254 Above ground components.

(a) Any component may be installed above ground in the following situations, if the other applicable requirements of this part are complied with:

(1) Overhead crossings of highways, railroads, or a body of water.

(2) Spans over ditches and gullies.

(3) Scraper traps or block valves.

(4) Areas under the direct control of the operator.

(5) In any area inaccessible to the public.

(b) Each component covered by this section must be protected from the forces exerted by the anticipated loads.

§ 195.256 Crossing of railroads and highways.

The pipe at each railroad or highway crossing must be installed so as to adequately withstand the dynamic forces exerted by anticipated traffic loads.

§ 195.258 Valves: General.

(a) Each valve must be installed in a location that is accessible to authorized employees and that is protected from damage or tampering.

(b) Each submerged valve located offshore or in inland navigable waters must be marked, or located by conventional survey techniques, to facilitate quick location when operation of the valve is required.

§ 195.260 Valves: Location.

A valve must be installed at each of the following locations:

(a) On the suction end and the discharge end of a pump station in a manner that permits isolation of the pump station equipment in the event of an emergency.

(b) On each line entering or leaving a breakout storage tank area in a manner that permits isolation of the tank area from other facilities.

(c) On each mainline at locations along the pipeline system that will minimize damage or pollution from accidental hazardous liquid discharge, as appropriate for the terrain in open country, for offshore areas, or for populated areas.

(d) On each lateral takeoff from a trunk line in a manner that permits shutting off the lateral without interrupting the flow in the trunk line.

(e) On each side of a water crossing that is more than 100 feet (30 meters) wide from high-water mark to high-water mark unless the Administrator finds in a particular case that valves are not justified.

(f) On each side of a reservoir holding water for human consumption.

[Amdt. 195–22, 46 FR 38360, July 27, 1981; 47 FR 32721, July 29, 1982; Amdt. 195–50, 59 FR 17281, Apr. 12, 1994; Amdt. 195–63, 63 FR 37506, July 13, 1998]

§ 195.262 Pumping equipment.

(a) Adequate ventilation must be provided in pump station buildings to prevent the accumulation of hazardous vapors. Warning devices must be installed to warn of the presence of hazardous vapors in the pumping station building.

(b) The following must be provided in each pump station:

(1) Safety devices that prevent overpressuring of pumping equipment, including the auxiliary pumping equipment within the pumping station.

(2) A device for the emergency shutdown of each pumping station.

(3) If power is necessary to actuate the safety devices, an auxiliary power supply.

(c) Each safety device must be tested under conditions approximating actual operations and found to function properly before the pumping station may be used.

(d) Except for offshore pipelines, pumping equipment must be installed on property that is under the control of the operator and at least 15.2 m (50 ft) from the boundary of the pump station.

(e) Adequate fire protection must be installed at each pump station. If the fire protection system installed requires the use of pumps, motive power must be provided for those pumps that is separate from the power that operates the station.

[Amdt. 195–22, 46 FR 38360, July 27, 1981, as amended by Amdt. 195–52, 59 FR 33397, June 28, 1994]

§ 195.264 Impoundment, protection against entry, normal/emergency venting or pressure/vacuum relief for aboveground breakout tanks.

(a) A means must be provided for containing hazardous liquids in the event of spillage or failure of an aboveground breakout tank.

(b) After October 2, 2000, compliance with paragraph (a) of this section requires the following for the aboveground breakout tanks specified:

(1) For tanks built to API Specification 12F, API Standard 620, and others (such as API Standard 650 or its predecessor Standard 12C), the installation of impoundment must be in accordance with the following sections of NFPA 30:

(i) Impoundment around a breakout tank must be installed in accordance with section 4.3.2.3.2; and

(ii) Impoundment by drainage to a remote impounding area must be installed in accordance with section 4.3.2.3.1.

(2) For tanks built to API 2510, the installation of impoundment must be in accordance with section 5 or 11 of API 2510 (incorporated by reference, *see* § 195.3).

(c) Aboveground breakout tank areas must be adequately protected against unauthorized entry.

(d) Normal/emergency relief venting must be provided for each atmospheric pressure breakout tank. Pressure/vacuum-relieving devices must be provided for each low-pressure and high-pressure breakout tank.

(e) For normal/emergency relief venting and pressure/vacuum-relieving devices installed on aboveground breakout tanks after October 2, 2000, compliance with paragraph (d) of this section requires the following for the tanks specified:

(1) Normal/emergency relief venting installed on atmospheric pressure tanks built to API Specification 12F (incorporated by reference, *see* § 195.3) must be in accordance with Section 4, and Appendices B and C, of API Specification 12F (incorporated by reference, *see* § 195.3).

(2) Normal/emergency relief venting installed on atmospheric pressure tanks (such as those built to API Standard 650 or its predecessor Standard 12C) must be in accordance with API Standard 2000 (incorporated by reference, *see* § 195.3).

(3) Pressure-relieving and emergency vacuum-relieving devices installed on low pressure tanks built to API Standard 620 (incorporated by reference, *see* § 195.3) must be in accordance with section 9 of API Standard 620 (incorporated by reference, *see* § 195.3) and its references to the normal and emergency venting requirements in API Standard 2000 (incorporated by reference, *see* § 195.3).

(4) Pressure and vacuum-relieving devices installed on high pressure tanks built to API Standard 2510 (incorporated by reference, *see* § 195.3) must be in accordance with sections 7 or 11 of API Standard 2510 (incorporated by reference, *see* § 195.3).

[Amdt. 195–66, 64 FR 15935, Apr. 2, 1999, as amended by 195–86, 71 FR 33410, June 9, 2006; 195–94, 75 FR 48606, Aug. 11, 2010]

§ 195.266 Construction records.

A complete record that shows the following must be maintained by the operator involved for the life of each pipeline facility:

(a) The total number of girth welds and the number nondestructively tested, including the number rejected and the disposition of each rejected weld.

(b) The amount, location; and cover of each size of pipe installed.

(c) The location of each crossing of another pipeline.

(d) The location of each buried utility crossing.

(e) The location of each overhead crossing.

(f) The location of each valve and corrosion test station.

[Amdt. 195–22, 46 FR 38360, July 27, 1981, as amended by Amdt. 195–34, 50 FR 34474, Aug. 26, 1985]

Subpart E—Pressure Testing

§ 195.300 Scope.

This subpart prescribes minimum requirements for the pressure testing of steel pipelines. However, this subpart does not apply to the movement of pipe under § 195.424.

[Amdt. 195–51, 59 FR 29384, June 7, 1994]

§ 195.302 General requirements.

(a) Except as otherwise provided in this section and in § 195.305(b), no operator may operate a pipeline unless it has been pressure tested under this subpart without leakage. In addition, no operator may return to service a segment of pipeline that has been replaced, relocated, or otherwise changed until it has been pressure tested under this subpart without leakage.

(b) Except for pipelines converted under § 195.5, the following pipelines may be operated without pressure testing under this subpart:

(1) Any hazardous liquid pipeline whose maximum operating pressure is established under § 195.406(a)(5) that is—

(i) An interstate pipeline constructed before January 8, 1971;

(ii) An interstate offshore gathering line constructed before August 1, 1977;

(iii) An intrastate pipeline constructed before October 21, 1985; or

(iv) A low-stress pipeline constructed before August 11, 1994 that transports HVL.

(2) Any carbon dioxide pipeline constructed before July 12, 1991, that—

(i) Has its maximum operating pressure established under § 195.406(a)(5); or

(ii) Is located in a rural area as part of a production field distribution system.

(3) Any low-stress pipeline constructed before August 11, 1994 that does not transport HVL.

(4) Those portions of older hazardous liquid and carbon dioxide pipelines for which an operator has elected the risk-based alternative under § 195.303 and which are not required to be tested based on the risk-based criteria.

(c) Except for pipelines that transport HVL onshore, low-stress pipelines, and pipelines covered under § 195.303, the following compliance deadlines apply to pipelines under paragraphs (b)(1) and (b)(2)(i) of this section that have not been pressure tested under this subpart:

(1) Before December 7, 1998, for each pipeline each operator shall—

(i) Plan and schedule testing according to this paragraph; or

(ii) Establish the pipeline's maximum operating pressure under § 195.406(a)(5).

(2) For pipelines scheduled for testing, each operator shall—

(i) Before December 7, 2000, pressure test—

(A) Each pipeline identified by name, symbol, or otherwise that existing records show contains more than 50 percent by mileage (length) of electric resistance welded pipe manufactured before 1970; and

(B) At least 50 percent of the mileage (length) of all other pipelines; and

(ii) Before December 7, 2003, pressure test the remainder of the pipeline mileage (length).

[Amdt. 195–51, 59 FR 29384, June 7, 1994, as amended by Amdt. 195–53, 59 FR 35471, July 12, 1994; Amdt. 195–51B, 61 FR 43027, Aug. 20, 1996; Amdt. 195–58, 62 FR 54592, Oct. 21, 1997; Amdt. 195–63, 63 FR 37506, July 13, 1998; Amdt. 195–65, 63 FR 59479, Nov. 4, 1998]

§ 195.303 Risk-based alternative to pressure testing older hazardous liquid and carbon dioxide pipelines.

(a) An operator may elect to follow a program for testing a pipeline on risk-based criteria as an alternative to the pressure testing in § 195.302(b)(1)(i)–(iii) and § 195.302(b)(2)(i) of this subpart. Appendix B provides guidance on how this program will work. An operator electing such a program shall assign a risk classification to each pipeline segment according to the indicators described in paragraph (b) of this section as follows:

(1) Risk Classification A if the location indicator is ranked as low or medium risk, the product and volume indicators are ranked as low risk, and the probability of failure indicator is ranked as low risk;

(2) Risk Classification C if the location indicator is ranked as high risk; or

(3) Risk Classification B.

(b) An operator shall evaluate each pipeline segment in the program according to the following indicators of risk:

(1) The location indicator is—

(i) High risk if an area is non-rural or environmentally sensitive[1]; or

(ii) Medium risk; or

(iii) Low risk if an area is not high or medium risk.

(2) The product indicator is[1]

(i) High risk if the product transported is highly toxic or is both highly volatile and flammable;

(ii) Medium risk if the product transported is flammable with a flashpoint of less than 100 °F, but not highly volatile; or

(iii) Low risk if the product transported is not high or medium risk.

(3) The volume indicator is—

(i) High risk if the line is at least 18 inches in nominal diameter;

(ii) Medium risk if the line is at least 10 inches, but less than 18 inches, in nominal diameter; or

(iii) Low risk if the line is not high or medium risk.

(4) The probability of failure indicator is—

(i) High risk if the segment has experienced more than three failures in the last 10 years due to time-dependent defects (e.g., corrosion, gouges, or problems developed during manufacture, construction or operation, etc.); or

(ii) Low risk if the segment has experienced three failures or less in the last 10 years due to time-dependent defects.

(c) The program under paragraph (a) of this section shall provide for pressure testing for a segment constructed of electric resistance-welded (ERW) pipe and lapwelded pipe manufactured

[1] (See Appendix B, Table C).

prior to 1970 susceptible to longitudinal seam failures as determined through paragraph (d) of this section. The timing of such pressure test may be determined based on risk classifications discussed under paragraph (b) of this section. For other segments, the program may provide for use of a magnetic flux leakage or ultrasonic internal inspection survey as an alternative to pressure testing and, in the case of such segments in Risk Classification A, may provide for no additional measures under this subpart.

(d) All pre-1970 ERW pipe and lapwelded pipe is deemed susceptible to longitudinal seam failures unless an engineering analysis shows otherwise. In conducting an engineering analysis an operator must consider the seam-related leak history of the pipe and pipe manufacturing information as available, which may include the pipe steel's mechanical properties, including fracture toughness; the manufacturing process and controls related to seam properties, including whether the ERW process was high-frequency or low-frequency, whether the weld seam was heat treated, whether the seam was inspected, the test pressure and duration during mill hydrotest; the quality control of the steel-making process; and other factors pertinent to seam properties and quality.

(e) Pressure testing done under this section must be conducted in accordance with this subpart. Except for segments in Risk Classification B which are not constructed with pre-1970 ERW pipe, water must be the test medium.

(f) An operator electing to follow a program under paragraph (a) must develop plans that include the method of testing and a schedule for the testing by December 7, 1998. The compliance deadlines for completion of testing are as shown in the table below:

§ 195.303—TEST DEADLINES

Pipeline Segment	Risk classification	Test deadline
Pre-1970 Pipe susceptible to longitudinal seam failures [defined in § 195.303(c) & (d)].	C or B	12/7/2000
	A	12/7/2002

§ 195.303—TEST DEADLINES—Continued

Pipeline Segment	Risk classification	Test deadline
All Other Pipeline Segments.	C	12/7/2002
	B	12/7//2004
	A	Additional testing not required

(g) An operator must review the risk classifications for those pipeline segments which have not yet been tested under paragraph (a) of this section or otherwise inspected under paragraph (c) of this section at intervals not to exceed 15 months. If the risk classification of an untested or uninspected segment changes, an operator must take appropriate action within two years, or establish the maximum operating pressure under § 195.406(a)(5).

(h) An operator must maintain records establishing compliance with this section, including records verifying the risk classifications, the plans and schedule for testing, the conduct of the testing, and the review of the risk classifications.

(i) An operator may discontinue a program under this section only after written notification to the Administrator and approval, if needed, of a schedule for pressure testing.

[Amdt. 195–65, 63 FR 59480, Nov. 4, 1998]

§ 195.304 Test pressure.

The test pressure for each pressure test conducted under this subpart must be maintained throughout the part of the system being tested for at least 4 continuous hours at a pressure equal to 125 percent, or more, of the maximum operating pressure and, in the case of a pipeline that is not visually inspected for leakage during the test, for at least an additional 4 continuous hours at a pressure equal to 110 percent, or more, of the maximum operating pressure.

[Amdt. 195–51, 59 FR 29384, June 7, 1994. Redesignated by Amdt. 195–65, 63 FR 59480, Nov. 4, 1998]

§ 195.305 Testing of components.

(a) Each pressure test under § 195.302 must test all pipe and attached fittings, including components, unless otherwise permitted by paragraph (b) of this section.

(b) A component, other than pipe, that is the only item being replaced or

added to the pipeline system need not be hydrostatically tested under paragraph (a) of this section if the manufacturer certifies that either—

(1) The component was hydrostatically tested at the factory; or

(2) The component was manufactured under a quality control system that ensures each component is at least equal in strength to a prototype that was hydrostatically tested at the factory.

[Amdt. 195–22, 46 FR 38360, July 27, 1981, as amended by Amdt. 195–51, 59 FR 29385, June 7, 1994; Amdt. 195–52, 59 FR 33397, June 28, 1994. Redesignated by Amdt. 195–65, 63 FR 59480, Nov. 4, 1998]

§ 195.306 Test medium.

(a) Except as provided in paragraphs (b), (c), and (d) of this section, water must be used as the test medium.

(b) Except for offshore pipelines, liquid petroleum that does not vaporize rapidly may be used as the test medium if—

(1) The entire pipeline section under test is outside of cities and other populated areas;

(2) Each building within 300 feet (91 meters) of the test section is unoccupied while the test pressure is equal to or greater than a pressure which produces a hoop stress of 50 percent of specified minimum yield strength;

(3) The test section is kept under surveillance by regular patrols during the test; and

(4) Continuous communication is maintained along entire test section.

(c) Carbon dioxide pipelines may use inert gas or carbon dioxide as the test medium if—

(1) The entire pipeline section under test is outside of cities and other populated areas;

(2) Each building within 300 feet (91 meters) of the test section is unoccupied while the test pressure is equal to or greater than a pressure that produces a hoop stress of 50 percent of specified minimum yield strength;

(3) The maximum hoop stress during the test does not exceed 80 percent of specified minimum yield strength;

(4) Continuous communication is maintained along entire test section; and

(5) The pipe involved is new pipe having a longitudinal joint factor of 1.00.

(d) Air or inert gas may be used as the test medium in low-stress pipelines.

[Amdt. 195–22, 46 FR 38360, July 27, 1991, as amended by Amdt. 195–45, 56 FR 26926, June 12, 1991; Amdt. 195–51, 59 FR 29385, June 7, 1994; Amdt. 195–53, 59 FR 35471, July 12, 1994; Amdt. 195–51A, 59 FR 41260, Aug. 11, 1994; Amdt. 195–63, 63 FR 37506, July 13, 1998]

§ 195.307 Pressure testing aboveground breakout tanks.

(a) For aboveground breakout tanks built into API Specification 12F and first placed in service after October 2, 2000, pneumatic testing must be in accordance with section 5.3 of API Specification 12 F (incorporated by reference, *see* § 195.3).

(b) For aboveground breakout tanks built to API Standard 620 and first placed in service after October 2, 2000, hydrostatic and pneumatic testing must be in accordance with section 7.18 of API Standard 620 (incorporated by reference, *see* § 195.3).

(c) For aboveground breakout tanks built to API Standard 650 (incorporated by reference, *see* § 195.3) and first placed in service after October 2, 2000, testing must be in accordance with Section 5.2 of API Standard 650 (incorporated by reference, *see* § 195.3).

(d) For aboveground atmospheric pressure breakout tanks constructed of carbon and low alloy steel, welded or riveted, and non-refrigerated and tanks built to API Standard 650 or its predecessor Standard 12C that are returned to service after October 2, 2000, the necessity for the hydrostatic testing of repair, alteration, and reconstruction is covered in section 10.3 of API Standard 653.

(e) For aboveground breakout tanks built to API Standard 2510 and first placed in service after October 2, 2000, pressure testing must be in accordance with ASME Boiler and Pressure Vessel Code, Section VIII, Division 1 or 2.

[Amdt. 195–66, 64 FR 15936, Apr. 2, 1999, as amended by Amdt. 195–86, 71 FR 33410, June 9, 2006; Amdt. 195–94, 75 FR 48607, Aug. 11, 2010]

§ 195.308 Testing of tie-ins.

Pipe associated with tie-ins must be pressure tested, either with the section to be tied in or separately.

[Amdt. 195–22, 46 FR 38360, July 27, 1981, as amended by 195–51, 59 FR 29385, June 7, 1994]

§ 195.310 Records.

(a) A record must be made of each pressure test required by this subpart, and the record of the latest test must be retained as long as the facility tested is in use.

(b) The record required by paragraph (a) of this section must include:

(1) The pressure recording charts;

(2) Test instrument calibration data;

(3) The name of the operator, the name of the person responsible for making the test, and the name of the test company used, if any;

(4) The date and time of the test;

(5) The minimum test pressure;

(6) The test medium;

(7) A description of the facility tested and the test apparatus;

(8) An explanation of any pressure discontinuities, including test failures, that appear on the pressure recording charts;

(9) Where elevation differences in the section under test exceed 100 feet (30 meters), a profile of the pipeline that shows the elevation and test sites over the entire length of the test section; and

(10) Temperature of the test medium or pipe during the test period.

[Amdt. 195–34, 50 FR 34474, Aug. 26, 1985, as amended by Amdt. 195–51, 59 FR 29385, June 7, 1994; Amdt. 195–63, 63 FR 37506, July 13, 1998; Amdt. 195–78, 68 FR 53528, Sept. 11, 2003]

Subpart F—Operation and Maintenance

§ 195.400 Scope.

This subpart prescribes minimum requirements for operating and maintaining pipeline systems constructed with steel pipe.

§ 195.401 General requirements.

(a) No operator may operate or maintain its pipeline systems at a level of safety lower than that required by this subpart and the procedures it is required to establish under § 195.402(a) of this subpart.

(b) An operator must make repairs on its pipeline system according to the following requirements:

(1) *Non Integrity management repairs.* Whenever an operator discovers any condition that could adversely affect the safe operation of its pipeline system, it must correct the condition within a reasonable time. However, if the condition is of such a nature that it presents an immediate hazard to persons or property, the operator may not operate the affected part of the system until it has corrected the unsafe condition.

(2) *Integrity management repairs.* When an operator discovers a condition on a pipeline covered under § 195.452, the operator must correct the condition as prescribed in § 195.452(h).

(c) Except as provided in § 195.5, no operator may operate any part of any of the following pipelines unless it was designed and constructed as required by this part:

(1) An interstate pipeline, other than a low-stress pipeline, on which construction was begun after March 31, 1970, that transports hazardous liquid.

(2) An interstate offshore gathering line, other than a low-stress pipeline, on which construction was begun after July 31, 1977, that transports hazardous liquid.

(3) An intrastate pipeline, other than a low-stress pipeline, on which construction was begun after October 20, 1985, that transports hazardous liquid.

(4) A pipeline on which construction was begun after July 11, 1991, that transports carbon dioxide.

(5) A low-stress pipeline on which construction was begun after August 10, 1994.

[Amdt. 195–22, 46 FR 38360, July 27, 1981, as amended by Amdt. 195–33, 50 FR 15899, Apr. 23, 1985; Amdt. 195–33A, 50 FR 39008, Sept. 26, 1985; Amdt. 195–36, 51 FR 15008, Apr. 22, 1986; Amdt. 195–45, 56 FR 26926, June 12, 1991; Amdt. 195–53, 59 FR 35471, July 12, 1994; Amdt. 195–94, 75 FR 48607, Aug. 11, 2010]

§ 195.402 Procedural manual for operations, maintenance, and emergencies.

(a) *General.* Each operator shall prepare and follow for each pipeline system a manual of written procedures for

conducting normal operations and maintenance activities and handling abnormal operations and emergencies. This manual shall be reviewed at intervals not exceeding 15 months, but at least once each calendar year, and appropriate changes made as necessary to insure that the manual is effective. This manual shall be prepared before initial operations of a pipeline system commence, and appropriate parts shall be kept at locations where operations and maintenance activities are conducted.

(b) The Associate Administrator or the State Agency that has submitted a current certification under the pipeline safety laws (49 U.S.C. 60101 *et seq.*) with respect to the pipeline facility governed by an operator's plans and procedures may, after notice and opportunity for hearing as provided in 49 CFR 190.206 or the relevant State procedures, require the operator to amend its plans and procedures as necessary to provide a reasonable level of safety.

(c) *Maintenance and normal operations.* The manual required by paragraph (a) of this section must include procedures for the following to provide safety during maintenance and normal operations:

(1) Making construction records, maps, and operating history available as necessary for safe operation and maintenance.

(2) Gathering of data needed for reporting accidents under subpart B of this part in a timely and effective manner.

(3) Operating, maintaining, and repairing the pipeline system in accordance with each of the requirements of this subpart and subpart H of this part.

(4) Determining which pipeline facilities are located in areas that would require an immediate response by the operator to prevent hazards to the public if the facilities failed or malfunctioned.

(5) Analyzing pipeline accidents to determine their causes.

(6) Minimizing the potential for hazards identified under paragraph (c)(4) of this section and the possibility of recurrence of accidents analyzed under paragraph (c)(5) of this section.

(7) Starting up and shutting down any part of the pipeline system in a manner designed to assure operation within the limits prescribed by § 195.406, consider the hazardous liquid or carbon dioxide in transportation, variations in altitude along the pipeline, and pressure monitoring and control devices.

(8) In the case of a pipeline that is not equipped to fail safe, monitoring from an attended location pipeline pressure during startup until steady state pressure and flow conditions are reached and during shut-in to assure operation within limits prescribed by § 195.406.

(9) In the case of facilities not equipped to fail safe that are identified under paragraph 195.402(c)(4) or that control receipt and delivery of the hazardous liquid or carbon dioxide, detecting abnormal operating conditions by monitoring pressure, temperature, flow or other appropriate operational data and transmitting this data to an attended location.

(10) Abandoning pipeline facilities, including safe disconnection from an operating pipeline system, purging of combustibles, and sealing abandoned facilities left in place to minimize safety and environmental hazards. For each abandoned offshore pipeline facility or each abandoned onshore pipeline facility that crosses over, under or through commercially navigable waterways the last operator of that facility must file a report upon abandonment of that facility in accordance with § 195.59 of this part.

(11) Minimizing the likelihood of accidental ignition of vapors in areas near facilities identified under paragraph (c)(4) of this section where the potential exists for the presence of flammable liquids or gases.

(12) Establishing and maintaining liaison with fire, police, and other appropriate public officials to learn the responsibility and resources of each government organization that may respond to a hazardous liquid or carbon dioxide pipeline emergency and acquaint the officials with the operator's ability in responding to a hazardous liquid or carbon dioxide pipeline emergency and means of communication.

(13) Periodically reviewing the work done by operator personnel to determine the effectiveness of the procedures used in normal operation and

maintenance and taking corrective action where deficiencies are found.

(14) Taking adequate precautions in excavated trenches to protect personnel from the hazards of unsafe accumulations of vapor or gas, and making available when needed at the excavation, emergency rescue equipment, including a breathing apparatus and, a rescue harness and line.

(15) Implementing the applicable control room management procedures required by § 195.446.

(d) *Abnormal operation*. The manual required by paragraph (a) of this section must include procedures for the following to provide safety when operating design limits have been exceeded:

(1) Responding to, investigating, and correcting the cause of:

(i) Unintended closure of valves or shutdowns;

(ii) Increase or decrease in pressure or flow rate outside normal operating limits;

(iii) Loss of communications;

(iv) Operation of any safety device;

(v) Any other malfunction of a component, deviation from normal operation, or personnel error which could cause a hazard to persons or property.

(2) Checking variations from normal operation after abnormal operation has ended at sufficient critical locations in the system to determine continued integrity and safe operation.

(3) Correcting variations from normal operation of pressure and flow equipment and controls.

(4) Notifying responsible operator personnel when notice of an abnormal operation is received.

(5) Periodically reviewing the response of operator personnel to determine the effectiveness of the procedures controlling abnormal operation and taking corrective action where deficiencies are found.

(e) *Emergencies*. The manual required by paragraph (a) of this section must include procedures for the following to provide safety when an emergency condition occurs:

(1) Receiving, identifying, and classifying notices of events which need immediate response by the operator or notice to fire, police, or other appropriate public officials and communicating this information to appropriate operator personnel for corrective action.

(2) Prompt and effective response to a notice of each type emergency, including fire or explosion occurring near or directly involving a pipeline facility, accidental release of hazardous liquid or carbon dioxide from a pipeline facility, operational failure causing a hazardous condition, and natural disaster affecting pipeline facilities.

(3) Having personnel, equipment, instruments, tools, and material available as needed at the scene of an emergency.

(4) Taking necessary action, such as emergency shutdown or pressure reduction, to minimize the volume of hazardous liquid or carbon dioxide that is released from any section of a pipeline system in the event of a failure.

(5) Control of released hazardous liquid or carbon dioxide at an accident scene to minimize the hazards, including possible intentional ignition in the cases of flammable highly volatile liquid.

(6) Minimization of public exposure to injury and probability of accidental ignition by assisting with evacuation of residents and assisting with halting traffic on roads and railroads in the affected area, or taking other appropriate action.

(7) Notifying fire, police, and other appropriate public officials of hazardous liquid or carbon dioxide pipeline emergencies and coordinating with them preplanned and actual responses during an emergency, including additional precautions necessary for an emergency involving a pipeline system transporting a highly volatile liquid.

(8) In the case of failure of a pipeline system transporting a highly volatile liquid, use of appropriate instruments to assess the extent and coverage of the vapor cloud and determine the hazardous areas.

(9) Providing for a post accident review of employee activities to determine whether the procedures were effective in each emergency and taking corrective action where deficiencies are found.

(10) Actions required to be taken by a controller during an emergency, in accordance with § 195.446.

(f) *Safety-related condition reports.* The manual required by paragraph (a) of this section must include instructions enabling personnel who perform operation and maintenance activities to recognize conditions that potentially may be safety-related conditions that are subject to the reporting requirements of § 195.55.

[Amdt. 195–22, 46 FR 38360, July 27, 1981; 47 FR 32721, July 29, 1982, as amended by Amdt. 195–24, 47 FR 46852, Oct. 21, 1982; Amdt. 195–39, 53 FR 24951, July 1, 1988; Amdt. 195–45, 56 FR 26926, June 12, 1991; Amdt. 195–46, 56 FR 31090, July 9, 1991; Amdt. 195–49, 59 FR 6585, Feb. 11, 1994; Amdt. 195–55, 61 FR 18518, Apr. 26, 1996; Amdt. 195–69, 65 FR 54444, Sept. 8, 2000; Amdt. 195–173, 66 FR 67004, Dec. 27, 2001; Amdt. 195–93, 74 FR 63329, Dec. 3, 2009; Amdt. 195–98, 78 FR 58915, Sept. 25, 2013]

§ 195.403 Emergency response training.

(a) Each operator shall establish and conduct a continuing training program to instruct emergency response personnel to:

(1) Carry out the emergency procedures established under 195.402 that relate to their assignments;

(2) Know the characteristics and hazards of the hazardous liquids or carbon dioxide transported, including, in case of flammable HVL, flammability of mixtures with air, odorless vapors, and water reactions;

(3) Recognize conditions that are likely to cause emergencies, predict the consequences of facility malfunctions or failures and hazardous liquids or carbon dioxide spills, and take appropriate corrective action;

(4) Take steps necessary to control any accidental release of hazardous liquid or carbon dioxide and to minimize the potential for fire, explosion, toxicity, or environmental damage; and

(5) Learn the potential causes, types, sizes, and consequences of fire and the appropriate use of portable fire extinguishers and other on-site fire control equipment, involving, where feasible, a simulated pipeline emergency condition.

(b) At the intervals not exceeding 15 months, but at least once each calendar year, each operator shall:

(1) Review with personnel their performance in meeting the objectives of the emergency response training program set forth in paragraph (a) of this section; and

(2) Make appropriate changes to the emergency response training program as necessary to ensure that it is effective.

(c) Each operator shall require and verify that its supervisors maintain a thorough knowledge of that portion of the emergency response procedures established under 195.402 for which they are responsible to ensure compliance.

[Amdt. 195–67, 64 FR 46866, Aug. 27, 1999, as amended at Amdt. 195–78, 68 FR 53528, Sept. 11, 2003]

§ 195.404 Maps and records.

(a) Each operator shall maintain current maps and records of its pipeline systems that include at least the following information:

(1) Location and identification of the following pipeline facilities:

(i) Breakout tanks;

(ii) Pump stations;

(iii) Scraper and sphere facilities;

(iv) Pipeline valves;

(v) Facilities to which § 195.402(c)(9) applies;

(vi) Rights-of-way; and

(vii) Safety devices to which § 195.428 applies.

(2) All crossings of public roads, railroads, rivers, buried utilities, and foreign pipelines.

(3) The maximum operating pressure of each pipeline.

(4) The diameter, grade, type, and nominal wall thickness of all pipe.

(b) Each operator shall maintain for at least 3 years daily operating records that indicate—

(1) The discharge pressure at each pump station; and

(2) Any emergency or abnormal operation to which the procedures under § 195.402 apply.

(c) Each operator shall maintain the following records for the periods specified:

(1) The date, location, and description of each repair made to pipe shall be maintained for the useful life of the pipe.

(2) The date, location, and description of each repair made to parts of the pipeline system other than pipe shall be maintained for at least 1 year.

(3) A record of each inspection and test required by this subpart shall be maintained for at least 2 years or until the next inspection or test is performed, whichever is longer.

[Amdt. 195–22, 46 FR 38360, July 27, 1981, as amended by Amdt. 195–34, 50 FR 34474, Aug. 26, 1985; Amdt. 195–173, 66 FR 67004, Dec. 27, 2001]

§ 195.405 Protection against ignitions and safe access/egress involving floating roofs.

(a) After October 2, 2000, protection provided against ignitions arising out of static electricity, lightning, and stray currents during operation and maintenance activities involving aboveground breakout tanks must be in accordance with API Recommended Practice 2003, unless the operator notes in the procedural manual (§ 195.402(c)) why compliance with all or certain provisions of API Recommended Practice 2003 is not necessary for the safety of a particular breakout tank.

(b) The hazards associated with access/egress onto floating roofs of in-service aboveground breakout tanks to perform inspection, service, maintenance or repair activities (other than specified general considerations, specified routine tasks or entering tanks removed from service for cleaning) are addressed in API Publication 2026. After October 2, 2000, the operator must review and consider the potentially hazardous conditions, safety practices and procedures in API Publication 2026 for inclusion in the procedure manual (§ 195.402(c)).

[Amdt. 195–66, 64 FR 15936, Apr. 2, 1999]

§ 195.406 Maximum operating pressure.

(a) Except for surge pressures and other variations from normal operations, no operator may operate a pipeline at a pressure that exceeds any of the following:

(1) The internal design pressure of the pipe determined in accordance with § 195.106. However, for steel pipe in pipelines being converted under § 195.5, if one or more factors of the design formula (§ 195.106) are unknown, one of the following pressures is to be used as design pressure:

(i) Eighty percent of the first test pressure that produces yield under section N5.0 of appendix N of ASME B31.8, reduced by the appropriate factors in §§ 195.106 (a) and (e); or

(ii) If the pipe is 12 ¾ inch (324 mm) or less outside diameter and is not tested to yield under this paragraph, 200 p.s.i. (1379 kPa) gage.

(2) The design pressure of any other component of the pipeline.

(3) Eighty percent of the test pressure for any part of the pipeline which has been pressure tested under subpart E of this part.

(4) Eighty percent of the factory test pressure or of the prototype test pressure for any individually installed component which is excepted from testing under § 195.305.

(5) For pipelines under §§ 195.302(b)(1) and (b)(2)(i) that have not been pressure tested under subpart E of this part, 80 percent of the test pressure or highest operating pressure to which the pipeline was subjected for 4 or more continuous hours that can be demonstrated by recording charts or logs made at the time the test or operations were conducted.

(b) No operator may permit the pressure in a pipeline during surges or other variations from normal operations to exceed 110 percent of the operating pressure limit established under paragraph (a) of this section. Each operator must provide adequate controls and protective equipment to control the pressure within this limit.

[Amdt. 195–22, 46 FR 38360, July 27, 1981, as amended by Amdt. 195–33, 50 FR 15899, Apr. 23, 1985; 50 FR 38660, Sept. 24, 1985; Amdt. 195–51, 59 FR 29385, June 7, 1994; Amdt. 195–52, 59 FR 33397, June 28, 1994; Amdt. 195–63, 63 FR 37506, July 13, 1998; Amdt. 195–65, 63 FR 59480, Nov. 4, 1998]

§ 195.408 Communications.

(a) Each operator must have a communication system to provide for the transmission of information needed for the safe operation of its pipeline system.

(b) The communication system required by paragraph (a) of this section must, as a minimum, include means for:

(1) Monitoring operational data as required by § 195.402(c)(9);

(2) Receiving notices from operator personnel, the public, and public authorities of abnormal or emergency conditions and sending this information to appropriate personnel or government agencies for corrective action;

(3) Conducting two-way vocal communication between a control center and the scene of abnormal operations and emergencies; and

(4) Providing communication with fire, police, and other appropriate public officials during emergency conditions, including a natural disaster.

§ 195.410 Line markers.

(a) Except as provided in paragraph (b) of this section, each operator shall place and maintain line markers over each buried pipeline in accordance with the following:

(1) Markers must be located at each public road crossing, at each railroad crossing, and in sufficient number along the remainder of each buried line so that its location is accurately known.

(2) The marker must state at least the following on a background of sharply contrasting color:

(i) The word ''Warning,'' ''Caution,'' or ''Danger'' followed by the words ''Petroleum (or the name of the hazardous liquid transported) Pipeline'', or ''Carbon Dioxide Pipeline,'' all of which, except for markers in heavily developed urban areas, must be in letters at least 1 inch (25 millimeters) high with an approximate stroke of ¼ inch (6.4 millimeters).

(ii) The name of the operator and a telephone number (including area code) where the operator can be reached at all times.

(b) Line markers are not required for buried pipelines located—

(1) Offshore or at crossings of or under waterways and other bodies of water; or

(2) In heavily developed urban areas such as downtown business centers where—

(i) The placement of markers is impractical and would not serve the purpose for which markers are intended; and

(ii) The local government maintains current substructure records.

(c) Each operator shall provide line marking at locations where the line is above ground in areas that are accessible to the public.

[Amdt. 195–22, 46 FR 38360, July 27, 1981, as amended by Amdt. 195–27, 48 FR 25208, June 6, 1983; Amdt. 195–54, 60 FR 14650, Mar. 20, 1995; Amdt. 195–63, 63 FR 37506, July 13, 1998]

§ 195.412 Inspection of rights-of-way and crossings under navigable waters.

(a) Each operator shall, at intervals not exceeding 3 weeks, but at least 26 times each calendar year, inspect the surface conditions on or adjacent to each pipeline right-of-way. Methods of inspection include walking, driving, flying or other appropriate means of traversing the right-of-way.

(b) Except for offshore pipelines, each operator shall, at intervals not exceeding 5 years, inspect each crossing under a navigable waterway to determine the condition of the crossing.

[Amdt. 195–22, 46 FR 38360, July 27, 1981, as amended by Amdt. 195–24, 47 FR 46852, Oct. 21, 1982; Amdt. 195–52, 59 FR 33397, June 28, 1994]

§ 195.413 Underwater inspection and reburial of pipelines in the Gulf of Mexico and its inlets.

(a) Except for gathering lines of 4½ inches (114mm) nominal outside diameter or smaller, each operator shall prepare and follow a procedure to identify its pipelines in the Gulf of Mexico and its inlets in waters less than 15 feet (4.6 meters) deep as measured from mean low water that are at risk of being an exposed underwater pipeline or a hazard to navigation. The procedures must be in effect August 10, 2005.

(b) Each operator shall conduct appropriate periodic underwater inspections of its pipelines in the Gulf of Mexico and its inlets in waters less than 15 feet (4.6 meters) deep as measured from mean low water based on the identified risk.

(c) If an operator discovers that its pipeline is an exposed underwater pipeline or poses a hazard to navigation, the operator shall—

(1) Promptly, but not later than 24 hours after discovery, notify the National Response Center, telephone: 1–800–424–8802, of the location and, if

available, the geographic coordinates of that pipeline.

(2) Promptly, but not later than 7 days after discovery, mark the location of the pipeline in accordance with 33 CFR Part 64 at the ends of the pipeline segment and at intervals of not over 500 yards (457 meters) long, except that a pipeline segment less than 200 yards (183 meters) long need only be marked at the center; and

(3) Within 6 months after discovery, or not later than November 1 of the following year if the 6 month period is later than November 1 of the year of discovery, bury the pipeline so that the top of the pipe is 36 inches (914 millimeters) below the underwater natural bottom (as determined by recognized and generally accepted practices) for normal excavation or 18 inches (457 millimeters) for rock excavation.

(i) An operator may employ engineered alternatives to burial that meet or exceed the level of protection provided by burial.

(ii) If an operator cannot obtain required state or Federal permits in time to comply with this section, it must notify OPS; specify whether the required permit is State or Federal; and, justify the delay.

[Amdt. 195–82, 69 FR 48407, Aug. 10, 2004]

§§ 195.414–195.418 [Reserved]

§ 195.420 Valve maintenance.

(a) Each operator shall maintain each valve that is necessary for the safe operation of its pipeline systems in good working order at all times.

(b) Each operator shall, at intervals not exceeding 7½ months, but at least twice each calendar year, inspect each mainline valve to determine that it is functioning properly.

(c) Each operator shall provide protection for each valve from unauthorized operation and from vandalism.

[Amdt. 195–22, 46 FR 38360, July 27, 1981; 47 FR 32721, July 29, 1982, as amended by Amdt. 195–24, 47 FR 46852, Oct. 21, 1982]

§ 195.422 Pipeline repairs.

(a) Each operator shall, in repairing its pipeline systems, insure that the repairs are made in a safe manner and are made so as to prevent damage to persons or property.

(b) No operator may use any pipe, valve, or fitting, for replacement in repairing pipeline facilities, unless it is designed and constructed as required by this part.

§ 195.424 Pipe movement.

(a) No operator may move any line pipe, unless the pressure in the line section involved is reduced to not more than 50 percent of the maximum operating pressure.

(b) No operator may move any pipeline containing highly volatile liquids where materials in the line section involved are joined by welding unless—

(1) Movement when the pipeline does not contain highly volatile liquids is impractical;

(2) The procedures of the operator under § 195.402 contain precautions to protect the public against the hazard in moving pipelines containing highly volatile liquids, including the use of warnings, where necessary, to evacuate the area close to the pipeline; and

(3) The pressure in that line section is reduced to the lower of the following:

(i) Fifty percent or less of the maximum operating pressure; or

(ii) The lowest practical level that will maintain the highly volatile liquid in a liquid state with continuous flow, but not less than 50 p.s.i. (345 kPa) gage above the vapor pressure of the commodity.

(c) No operator may move any pipeline containing highly volatile liquids where materials in the line section involved are not joined by welding unless—

(1) The operator complies with paragraphs (b) (1) and (2) of this section; and

(2) That line section is isolated to prevent the flow of highly volatile liquid.

[Amdt. 195–22, 46 FR 38360, July 27, 1981; 46 FR 38922, July 30, 1981, as amended by Amdt. 195–63, 63 FR 37506, July 13, 1998]

§ 195.426 Scraper and sphere facilities.

No operator may use a launcher or receiver that is not equipped with a relief device capable of safely relieving pressure in the barrel before insertion or removal of scrapers or spheres. The operator must use a suitable device to

indicate that pressure has been relieved in the barrel or must provide a means to prevent insertion or removal of scrapers or spheres if pressure has not been relieved in the barrel.

[Amdt. 195–22, 46 FR 38360, July 27, 1981; 47 FR 32721, July 29, 1982]

§ 195.428 Overpressure safety devices and overfill protection systems.

(a) Except as provided in paragraph (b) of this section, each operator shall, at intervals not exceeding 15 months, but at least once each calendar year, or in the case of pipelines used to carry highly volatile liquids, at intervals not to exceed 7½ months, but at least twice each calendar year, inspect and test each pressure limiting device, relief valve, pressure regulator, or other item of pressure control equipment to determine that it is functioning properly, is in good mechanical condition, and is adequate from the standpoint of capacity and reliability of operation for the service in which it is used.

(b) In the case of relief valves on pressure breakout tanks containing highly volatile liquids, each operator shall test each valve at intervals not exceeding 5 years.

(c) Aboveground breakout tanks that are constructed or significantly altered according to API Standard 2510 after October 2, 2000, must have an overfill protection system installed according to section 5.1.2 of API Standard 2510. Other aboveground breakout tanks with 600 gallons (2271 liters) or more of storage capacity that are constructed or significantly altered after October 2, 2000, must have an overfill protection system installed according to API Recommended Practice 2350. However, operators need not comply with any part of API Recommended Practice 2350 for a particular breakout tank if the operator notes in the manual required by § 195.402 why compliance with that part is not necessary for safety of the tank.

(d) After October 2, 2000, the requirements of paragraphs (a) and (b) of this section for inspection and testing of pressure control equipment apply to the inspection and testing of overfill protection systems.

[Amdt. 195–22, 46 FR 38360, July 27, 1981, as amended by Amdt. 195–24, 47 FR 46852, Oct. 21, 1982; Amdt. 195–66, 64 FR 15936, Apr. 2, 1999]

§ 195.430 Firefighting equipment.

Each operator shall maintain adequate firefighting equipment at each pump station and breakout tank area. The equipment must be—

(a) In proper operating condition at all times;

(b) Plainly marked so that its identity as firefighting equipment is clear; and

(c) Located so that it is easily accessible during a fire.

§ 195.432 Inspection of in-service breakout tanks.

(a) Except for breakout tanks inspected under paragraphs (b) and (c) of this section, each operator shall, at intervals not exceeding 15 months, but at least once each calendar year, inspect each in-service breakout tank.

(b) Each operator must inspect the physical integrity of in-service atmospheric and low-pressure steel aboveground breakout tanks according to API Standard 653 (incorporated by reference, *see* § 195.3). However, if structural conditions prevent access to the tank bottom, the bottom integrity may be assessed according to a plan included in the operations and maintenance manual under § 195.402(c)(3).

(c) Each operator shall inspect the physical integrity of in-service steel aboveground breakout tanks built to API Standard 2510 according to section 6 of API 510.

(d) The intervals of inspection specified by documents referenced in paragraphs (b) and (c) of this section begin on May 3, 1999, or on the operator's last recorded date of the inspection, whichever is earlier.

[Amdt. 195–66, 64 FR 15936, Apr. 2, 1999, as amended by 195–94, 75 FR 48607, Aug. 11, 2010]

§ 195.434 Signs.

Each operator must maintain signs visible to the public around each pumping station and breakout tank area. Each sign must contain the name of the operator and a telephone number

(including area code) where the operator can be reached at all times.

[Amdt. 195–78, 68 FR 53528, Sept. 11, 2003]

§ 195.436 Security of facilities.

Each operator shall provide protection for each pumping station and breakout tank area and other exposed facility (such as scraper traps) from vandalism and unauthorized entry.

§ 195.438 Smoking or open flames.

Each operator shall prohibit smoking and open flames in each pump station area and each breakout tank area where there is a possibility of the leakage of a flammable hazardous liquid or of the presence of flammable vapors.

§ 195.440 Public awareness.

(a) Each pipeline operator must develop and implement a written continuing public education program that follows the guidance provided in the American Petroleum Institute's (API) Recommended Practice (RP) 1162 (incorporated by reference, *see* § 195.3).

(b) The operator's program must follow the general program recommendations of API RP 1162 and assess the unique attributes and characteristics of the operator's pipeline and facilities.

(c) The operator must follow the general program recommendations, including baseline and supplemental requirements of API RP 1162, unless the operator provides justification in its program or procedural manual as to why compliance with all or certain provisions of the recommended practice is not practicable and not necessary for safety.

(d) The operator's program must specifically include provisions to educate the public, appropriate government organizations, and persons engaged in excavation related activities on:

(1) Use of a one-call notification system prior to excavation and other damage prevention activities;

(2) Possible hazards associated with unintended releases from a hazardous liquid or carbon dioxide pipeline facility;

(3) Physical indications that such a release may have occurred;

(4) Steps that should be taken for public safety in the event of a hazardous liquid or carbon dioxide pipeline release; and

(5) Procedures to report such an event.

(e) The program must include activities to advise affected municipalities, school districts, businesses, and residents of pipeline facility locations.

(f) The program and the media used must be as comprehensive as necessary to reach all areas in which the operator transports hazardous liquid or carbon dioxide.

(g) The program must be conducted in English and in other languages commonly understood by a significant number and concentration of the non-English speaking population in the operator's area.

(h) Operators in existence on June 20, 2005, must have completed their written programs no later than June 20, 2006. Upon request, operators must submit their completed programs to PHMSA or, in the case of an intrastate pipeline facility operator, the appropriate State agency.

(i) The operator's program documentation and evaluation results must be available for periodic review by appropriate regulatory agencies.

[Amdt. 195–84, 70 FR 28843, May 19, 2005]

§ 195.442 Damage prevention program.

(a) Except as provided in paragraph (d) of this section, each operator of a buried pipeline must carry out, in accordance with this section, a written program to prevent damage to that pipeline from excavation activities. For the purpose of this section, the term ''excavation activities'' includes excavation, blasting, boring, tunneling, backfilling, the removal of aboveground structures by either explosive or mechanical means, and other earthmoving operations.

(b) An operator may comply with any of the requirements of paragraph (c) of this section through participation in a public service program, such as a one-call system, but such participation does not relieve the operator of the responsibility for compliance with this section. However, an operator must perform the duties of paragraph (c)(3) of this section through participation in a one-call system, if that one-call system is a qualified one-call system. In

areas that are covered by more than one qualified one-call system, an operator need only join one of the qualified one-call systems if there is a central telephone number for excavators to call for excavation activities, or if the one-call systems in those areas communicate with one another. An operator's pipeline system must be covered by a qualified one-call system where there is one in place. For the purpose of this section, a one-call system is considered a ''qualified one-call system'' if it meets the requirements of section (b)(1) or (b)(2) or this section.

(1) The state has adopted a one-call damage prevention program under § 198.37 of this chapter; or

(2) The one-call system:

(i) Is operated in accordance with § 198.39 of this chapter;

(ii) Provides a pipeline operator an opportunity similar to a voluntary participant to have a part in management responsibilities; and

(iii) Assesses a participating pipeline operator a fee that is proportionate to the costs of the one-call system's coverage of the operator's pipeline.

(c) The damage prevention program required by paragraph (a) of this section must, at a minimum:

(1) Include the identity, on a current basis, of persons who normally engage in excavation activities in the area in which the pipeline is located.

(2) Provides for notification of the public in the vicinity of the pipeline and actual notification of persons identified in paragraph (c)(1) of this section of the following as often as needed to make them aware of the damage prevention program:

(i) The program's existence and purpose; and

(ii) How to learn the location of underground pipelines before excavation activities are begun.

(3) Provide a means of receiving and recording notification of planned excavation activities.

(4) If the operator has buried pipelines in the area of excavation activity, provide for actual notification of persons who give notice of their intent to excavate of the type of temporary marking to be provided and how to identify the markings.

(5) Provide for temporary marking of buried pipelines in the area of excavation activity before, as far as practical, the activity begins.

(6) Provide as follows for inspection of pipelines that an operator has reason to believe could be damaged by excavation activities:

(i) The inspection must be done as frequently as necessary during and after the activities to verify the integrity of the pipeline; and

(ii) In the case of blasting, any inspection must include leakage surveys.

(d) A damage prevention program under this section is not required for the following pipelines:

(1) Pipelines located offshore.

(2) Pipelines to which access is physically controlled by the operator.

[Amdt. 195–54, 60 FR 14651, Mar. 20, 1995, as amended by Amdt. 195–60, 62 FR 61699, Nov. 19, 1997]

§ 195.444 CPM leak detection.

Each computational pipeline monitoring (CPM) leak detection system installed on a hazardous liquid pipeline transporting liquid in single phase (without gas in the liquid) must comply with API 1130 in operating, maintaining, testing, record keeping, and dispatcher training of the system.

[Amdt. 195–62, 63 FR 36376, July 6, 1998]

§ 195.446 Control room management.

(a) *General*. This section applies to each operator of a pipeline facility with a controller working in a control room who monitors and controls all or part of a pipeline facility through a SCADA system. Each operator must have and follow written control room management procedures that implement the requirements of this section. The procedures required by this section must be integrated, as appropriate, with the operator's written procedures required by § 195.402. An operator must develop the procedures no later than August 1, 2011, and must implement the procedures according to the following schedule. The procedures required by paragraphs (b), (c)(5), (d)(2) and (d)(3), (f) and (g) of this section must be implemented no later than October 1, 2011. The procedures required by paragraphs (c)(1) through (4), (d)(1), (d)(4),

and (e) must be implemented no later than August 1, 2012. The training procedures required by paragraph (h) must be implemented no later than August 1, 2012, except that any training required by another paragraph of this section must be implemented no later than the deadline for that paragraph.

(b) *Roles and responsibilities.* Each operator must define the roles and responsibilities of a controller during normal, abnormal, and emergency operating conditions. To provide for a controller's prompt and appropriate response to operating conditions, an operator must define each of the following:

(1) A controller's authority and responsibility to make decisions and take actions during normal operations;

(2) A controller's role when an abnormal operating condition is detected, even if the controller is not the first to detect the condition, including the controller's responsibility to take specific actions and to communicate with others;

(3) A controller's role during an emergency, even if the controller is not the first to detect the emergency, including the controller's responsibility to take specific actions and to communicate with others; and

(4) A method of recording controller shift-changes and any hand-over of responsibility between controllers.

(c) *Provide adequate information.* Each operator must provide its controllers with the information, tools, processes and procedures necessary for the controllers to carry out the roles and responsibilities the operator has defined by performing each of the following:

(1) Implement API RP 1165 (incorporated by reference, *see* §195.3) whenever a SCADA system is added, expanded or replaced, unless the operator demonstrates that certain provisions of API RP 1165 are not practical for the SCADA system used;

(2) Conduct a point-to-point verification between SCADA displays and related field equipment when field equipment is added or moved and when other changes that affect pipeline safety are made to field equipment or SCADA displays;

(3) Test and verify an internal communication plan to provide adequate means for manual operation of the pipeline safely, at least once each calendar year, but at intervals not to exceed 15 months;

(4) Test any backup SCADA systems at least once each calendar year, but at intervals not to exceed 15 months; and

(5) Implement section 5 of API RP 1168 (incorporated by reference, *see* §195.3) to establish procedures for when a different controller assumes responsibility, including the content of information to be exchanged.

(d) *Fatigue mitigation.* Each operator must implement the following methods to reduce the risk associated with controller fatigue that could inhibit a controller's ability to carry out the roles and responsibilities the operator has defined:

(1) Establish shift lengths and schedule rotations that provide controllers off-duty time sufficient to achieve eight hours of continuous sleep;

(2) Educate controllers and supervisors in fatigue mitigation strategies and how off-duty activities contribute to fatigue;

(3) Train controllers and supervisors to recognize the effects of fatigue; and

(4) Establish a maximum limit on controller hours-of-service, which may provide for an emergency deviation from the maximum limit if necessary for the safe operation of a pipeline facility.

(e) *Alarm management.* Each operator using a SCADA system must have a written alarm management plan to provide for effective controller response to alarms. An operator's plan must include provisions to:

(1) Review SCADA safety-related alarm operations using a process that ensures alarms are accurate and support safe pipeline operations;

(2) Identify at least once each calendar month points affecting safety that have been taken off scan in the SCADA host, have had alarms inhibited, generated false alarms, or that have had forced or manual values for periods of time exceeding that required for associated maintenance or operating activities;

(3) Verify the correct safety-related alarm set-point values and alarm descriptions when associated field instruments are calibrated or changed and at

least once each calendar year, but at intervals not to exceed 15 months;

(4) Review the alarm management plan required by this paragraph at least once each calendar year, but at intervals not exceeding 15 months, to determine the effectiveness of the plan;

(5) Monitor the content and volume of general activity being directed to and required of each controller at least once each calendar year, but at intervals not exceeding 15 months, that will assure controllers have sufficient time to analyze and react to incoming alarms; and

(6) Address deficiencies identified through the implementation of paragraphs (e)(1) through (e)(5) of this section.

(f) *Change management*. Each operator must assure that changes that could affect control room operations are coordinated with the control room personnel by performing each of the following:

(1) Implement section 7 of API RP 1168 (incorporated by reference, see §195.3) for control room management change and require coordination between control room representatives, operator's management, and associated field personnel when planning and implementing physical changes to pipeline equipment or configuration; and

(2) Require its field personnel to contact the control room when emergency conditions exist and when making field changes that affect control room operations.

(g) *Operating experience*. Each operator must assure that lessons learned from its operating experience are incorporated, as appropriate, into its control room management procedures by performing each of the following:

(1) Review accidents that must be reported pursuant to §195.50 and 195.52 to determine if control room actions contributed to the event and, if so, correct, where necessary, deficiencies related to:

(i) Controller fatigue;

(ii) Field equipment;

(iii) The operation of any relief device;

(iv) Procedures;

(v) SCADA system configuration; and

(vi) SCADA system performance.

(2) Include lessons learned from the operator's experience in the training program required by this section.

(h) *Training*. Each operator must establish a controller training program and review the training program content to identify potential improvements at least once each calendar year, but at intervals not to exceed 15 months. An operator's program must provide for training each controller to carry out the roles and responsibilities defined by the operator. In addition, the training program must include the following elements:

(1) Responding to abnormal operating conditions likely to occur simultaneously or in sequence;

(2) Use of a computerized simulator or non-computerized (tabletop) method for training controllers to recognize abnormal operating conditions;

(3) Training controllers on their responsibilities for communication under the operator's emergency response procedures;

(4) Training that will provide a controller a working knowledge of the pipeline system, especially during the development of abnormal operating conditions; and

(5) For pipeline operating setups that are periodically, but infrequently used, providing an opportunity for controllers to review relevant procedures in advance of their application.

(i) *Compliance validation*. Upon request, operators must submit their procedures to PHMSA or, in the case of an intrastate pipeline facility regulated by a State, to the appropriate State agency.

(j) *Compliance and deviations*. An operator must maintain for review during inspection:

(1) Records that demonstrate compliance with the requirements of this section; and

(2) Documentation to demonstrate that any deviation from the procedures required by this section was necessary for the safe operation of the pipeline facility.

[Amdt. 195–93, 74 FR 63329, Dec. 3, 2009, as amended at 75 FR 5537, Feb. 3, 2010; 76 FR 35135, June 16, 2011]

HIGH CONSEQUENCE AREAS

§ 195.450 Definitions.

The following definitions apply to this section and § 195.452:

Emergency flow restricting device or *EFRD* means a check valve or remote control valve as follows:

(1) *Check valve* means a valve that permits fluid to flow freely in one direction and contains a mechanism to automatically prevent flow in the other direction.

(2) *Remote control valve* or *RCV* means any valve that is operated from a location remote from where the valve is installed. The RCV is usually operated by the supervisory control and data acquisition (SCADA) system. The linkage between the pipeline control center and the RCV may be by fiber optics, microwave, telephone lines, or satellite.

High consequence area means:

(1) A *commercially navigable waterway*, which means a waterway where a substantial likelihood of commercial navigation exists;

(2) A *high population area*, which means an urbanized area, as defined and delineated by the Census Bureau, that contains 50,000 or more people and has a population density of at least 1,000 people per square mile;

(3) An *other populated area*, which means a place, as defined and delineated by the Census Bureau, that contains a concentrated population, such as an incorporated or unincorporated city, town, village, or other designated residential or commercial area;

(4) An *unusually sensitive area*, as defined in § 195.6.

[Amdt. 195–70, 65 FR 75405, Dec. 1, 2000]

PIPELINE INTEGRITY MANAGEMENT

§ 195.452 Pipeline integrity management in high consequence areas.

(a) *Which pipelines are covered by this section?* This section applies to each hazardous liquid pipeline and carbon dioxide pipeline that could affect a high consequence area, including any pipeline located in a high consequence area unless the operator effectively demonstrates by risk assessment that the pipeline could not affect the area. (Appendix C of this part provides guidance on determining if a pipeline could affect a high consequence area.) Covered pipelines are categorized as follows:

(1) Category 1 includes pipelines existing on May 29, 2001, that were owned or operated by an operator who owned or operated a total of 500 or more miles of pipeline subject to this part.

(2) Category 2 includes pipelines existing on May 29, 2001, that were owned or operated by an operator who owned or operated less than 500 miles of pipeline subject to this part.

(3) Category 3 includes pipelines constructed or converted after May 29, 2001.

(b) *What program and practices must operators use to manage pipeline integrity?* Each operator of a pipeline covered by this section must:

(1) Develop a written integrity management program that addresses the risks on each segment of pipeline in the first column of the following table not later than the date in the second column:

Pipeline	Date
Category 1	March 31, 2002.
Category 2	February 18, 2003.
Category 3	1 year after the date the pipeline begins operation.

(2) Include in the program an identification of each pipeline or pipeline segment in the first column of the following table not later than the date in the second column:

Pipeline	Date
Category 1	December 31, 2001.
Category 2	November 18, 2002.
Category 3	Date the pipeline begins operation.

(3) Include in the program a plan to carry out baseline assessments of line pipe as required by paragraph (c) of this section.

(4) Include in the program a framework that—

(i) Addresses each element of the integrity management program under paragraph (f) of this section, including continual integrity assessment and evaluation under paragraph (j) of this section; and

(ii) Initially indicates how decisions will be made to implement each element.

(5) Implement and follow the program.

(6) Follow recognized industry practices in carrying out this section, unless—

(i) This section specifies otherwise; or

(ii) The operator demonstrates that an alternative practice is supported by a reliable engineering evaluation and provides an equivalent level of public safety and environmental protection.

(c) *What must be in the baseline assessment plan?* (1) An operator must include each of the following elements in its written baseline assessment plan:

(i) The methods selected to assess the integrity of the line pipe. An operator must assess the integrity of the line pipe by any of the following methods. The methods an operator selects to assess low frequency electric resistance welded pipe or lap welded pipe susceptible to longitudinal seam failure must be capable of assessing seam integrity and of detecting corrosion and deformation anomalies.

(A) Internal inspection tool or tools capable of detecting corrosion and deformation anomalies including dents, gouges and grooves;

(B) Pressure test conducted in accordance with subpart E of this part;

(C) External corrosion direct assessment in accordance with § 195.588; or

(D) Other technology that the operator demonstrates can provide an equivalent understanding of the condition of the line pipe. An operator choosing this option must notify the Office of Pipeline Safety (OPS) 90 days before conducting the assessment, by sending a notice to the address or facsimile number specified in paragraph (m) of this section.

(ii) A schedule for completing the integrity assessment;

(iii) An explanation of the assessment methods selected and evaluation of risk factors considered in establishing the assessment schedule.

(2) An operator must document, prior to implementing any changes to the plan, any modification to the plan, and reasons for the modification.

(d) *When must operators complete baseline assessments?* Operators must complete baseline assessments as follows:

(1) *Time periods.* Complete assessments before the following deadlines:

If the pipeline is:	Then complete baseline assessments not later than the following date according to a schedule that prioritizes assessments:	And assess at least 50 percent of the line pipe on an expedited basis, beginning with the highest risk pipe, not later than:
Category 1	March 31, 2008	September 30, 2004.
Category 2	February 17, 2009	August 16, 2005.
Category 3	Date the pipeline begins operation	Not applicable.

(2) *Prior assessment.* To satisfy the requirements of paragraph (c)(1)(i) of this section for pipelines in the first column of the following table, operators may use integrity assessments conducted after the date in the second column, if the integrity assessment method complies with this section. However, if an operator uses this prior assessment as its baseline assessment, the operator must reassess the line pipe according to paragraph (j)(3) of this section. The table follows:

Pipeline	Date
Category 1	January 1, 1996.
Category 2	February 15, 1997.

(3) *Newly-identified areas.* (i) When information is available from the information analysis (see paragraph (g) of this section), or from Census Bureau maps, that the population density around a pipeline segment has changed so as to fall within the definition in § 195.450 of a high population area or other populated area, the operator must incorporate the area into its baseline assessment plan as a high consequence area within one year from the date the area is identified. An operator must complete the baseline assessment of any line pipe that could affect the newly-identified high consequence area within five years from the date the area is identified.

(ii) An operator must incorporate a new unusually sensitive area into its baseline assessment plan within one

year from the date the area is identified. An operator must complete the baseline assessment of any line pipe that could affect the newly-identified high consequence area within five years from the date the area is identified.

(e) *What are the risk factors for establishing an assessment schedule (for both the baseline and continual integrity assessments)?* (1) An operator must establish an integrity assessment schedule that prioritizes pipeline segments for assessment (see paragraphs (d)(1) and (j)(3) of this section). An operator must base the assessment schedule on all risk factors that reflect the risk conditions on the pipeline segment. The factors an operator must consider include, but are not limited to:

(i) Results of the previous integrity assessment, defect type and size that the assessment method can detect, and defect growth rate;

(ii) Pipe size, material, manufacturing information, coating type and condition, and seam type;

(iii) Leak history, repair history and cathodic protection history;

(iv) Product transported;

(v) Operating stress level;

(vi) Existing or projected activities in the area;

(vii) Local environmental factors that could affect the pipeline (*e.g.*, corrosivity of soil, subsidence, climatic);

(viii) geo-technical hazards; and

(ix) Physical support of the segment such as by a cable suspension bridge.

(2) Appendix C of this part provides further guidance on risk factors.

(f) *What are the elements of an integrity management program?* An integrity management program begins with the initial framework. An operator must continually change the program to reflect operating experience, conclusions drawn from results of the integrity assessments, and other maintenance and surveillance data, and evaluation of consequences of a failure on the high consequence area. An operator must include, at minimum, each of the following elements in its written integrity management program:

(1) A process for identifying which pipeline segments could affect a high consequence area;

(2) A baseline assessment plan meeting the requirements of paragraph (c) of this section;

(3) An analysis that integrates all available information about the integrity of the entire pipeline and the consequences of a failure (see paragraph (g) of this section);

(4) Criteria for remedial actions to address integrity issues raised by the assessment methods and information analysis (see paragraph (h) of this section);

(5) A continual process of assessment and evaluation to maintain a pipeline's integrity (see paragraph (j) of this section);

(6) Identification of preventive and mitigative measures to protect the high consequence area (see paragraph (i) of this section);

(7) Methods to measure the program's effectiveness (see paragraph (k) of this section);

(8) A process for review of integrity assessment results and information analysis by a person qualified to evaluate the results and information (see paragraph (h)(2) of this section).

(g) *What is an information analysis?* In periodically evaluating the integrity of each pipeline segment (paragraph (j) of this section), an operator must analyze all available information about the integrity of the entire pipeline and the consequences of a failure. This information includes:

(1) Information critical to determining the potential for, and preventing, damage due to excavation, including current and planned damage prevention activities, and development or planned development along the pipeline segment;

(2) Data gathered through the integrity assessment required under this section;

(3) Data gathered in conjunction with other inspections, tests, surveillance and patrols required by this Part, including, corrosion control monitoring and cathodic protection surveys; and

(4) Information about how a failure would affect the high consequence area, such as location of the water intake.

(h) *What actions must an operator take to address integrity issues?*—(1) *General requirements.* An operator must take

prompt action to address all anomalous conditions the operator discovers through the integrity assessment or information analysis. In addressing all conditions, an operator must evaluate all anomalous conditions and remediate those that could reduce a pipeline's integrity. An operator must be able to demonstrate that the remediation of the condition will ensure the condition is unlikely to pose a threat to the long-term integrity of the pipeline. An operator must comply with § 195.422 when making a repair.

(i) *Temporary pressure reduction.* An operator must notify PHMSA, in accordance with paragraph (m) of this section, if the operator cannot meet the schedule for evaluation and remediation required under paragraph (h)(3) of this section and cannot provide safety through a temporary reduction in operating pressure.

(ii) *Long-term pressure reduction.* When a pressure reduction exceeds 365 days, the operator must notify PHMSA in accordance with paragraph (m) of this section and explain the reasons for the delay. An operator must also take further remedial action to ensure the safety of the pipeline.

(2) *Discovery of condition.* Discovery of a condition occurs when an operator has adequate information about the condition to determine that the condition presents a potential threat to the integrity of the pipeline. An operator must promptly, but no later than 180 days after an integrity assessment, obtain sufficient information about a condition to make that determination, unless the operator can demonstrate that the 180-day period is impracticable.

(3) *Schedule for evaluation and remediation.* An operator must complete remediation of a condition according to a schedule prioritizing the conditions for evaluation and remediation. If an operator cannot meet the schedule for any condition, the operator must explain the reasons why it cannot meet the schedule and how the changed schedule will not jeopardize public safety or environmental protection.

(4) *Special requirements for scheduling remediation*—(i) *Immediate repair conditions.* An operator's evaluation and remediation schedule must provide for immediate repair conditions. To maintain safety, an operator must temporarily reduce operating pressure or shut down the pipeline until the operator completes the repair of these conditions. An operator must calculate the temporary reduction in operating pressure using the formula in Section 451.6.2.2 (b) of ANSI/ASME B31.4 (incorporated by reference, *see* § 195.3). An operator must treat the following conditions as immediate repair conditions:

(A) Metal loss greater than 80% of nominal wall regardless of dimensions.

(B) A calculation of the remaining strength of the pipe shows a predicted burst pressure less than the established maximum operating pressure at the location of the anomaly. Suitable remaining strength calculation methods include, but are not limited to, ASME/ANSI B31G (''Manual for Determining the Remaining Strength of Corroded Pipelines'' (1991) or AGA Pipeline Research Committee Project PR–3–805 (''A Modified Criterion for Evaluating the Remaining Strength of Corroded Pipe'' (December 1989)). These documents are incorporated by reference and are available at the addresses listed in § 195.3.

(C) A dent located on the top of the pipeline (above the 4 and 8 o'clock positions) that has any indication of metal loss, cracking or a stress riser.

(D) A dent located on the top of the pipeline (above the 4 and 8 o'clock positions) with a depth greater than 6% of the nominal pipe diameter.

(E) An anomaly that in the judgment of the person designated by the operator to evaluate the assessment results requires immediate action.

(ii) *60-day conditions.* Except for conditions listed in paragraph (h)(4)(i) of this section, an operator must schedule evaluation and remediation of the following conditions within 60 days of discovery of condition.

(A) A dent located on the top of the pipeline (above the 4 and 8 o'clock positions) with a depth greater than 3% of the pipeline diameter (greater than 0.250 inches in depth for a pipeline diameter less than Nominal Pipe Size (NPS) 12).

(B) A dent located on the bottom of the pipeline that has any indication of metal loss, cracking or a stress riser.

(iii) *180-day conditions.* Except for conditions listed in paragraph (h)(4)(i) or (ii) of this section, an operator must schedule evaluation and remediation of the following within 180 days of discovery of the condition:

(A) A dent with a depth greater than 2% of the pipeline's diameter (0.250 inches in depth for a pipeline diameter less than NPS 12) that affects pipe curvature at a girth weld or a longitudinal seam weld.

(B) A dent located on the top of the pipeline (above 4 and 8 o'clock position) with a depth greater than 2% of the pipeline's diameter (0.250 inches in depth for a pipeline diameter less than NPS 12).

(C) A dent located on the bottom of the pipeline with a depth greater than 6% of the pipeline's diameter.

(D) A calculation of the remaining strength of the pipe shows an operating pressure that is less than the current established maximum operating pressure at the location of the anomaly. Suitable remaining strength calculation methods include, but are not limited to, ASME/ANSI B31G (''Manual for Determining the Remaining Strength of Corroded Pipelines'' (1991)) or AGA Pipeline Research Committee Project PR–3–805 (''A Modified Criterion for Evaluating the Remaining Strength of Corroded Pipe'' (December 1989)). These documents are incorporated by reference and are available at the addresses listed in § 195.3.

(E) An area of general corrosion with a predicted metal loss greater than 50% of nominal wall.

(F) Predicted metal loss greater than 50% of nominal wall that is located at a crossing of another pipeline, or is in an area with widespread circumferential corrosion, or is in an area that could affect a girth weld.

(G) A potential crack indication that when excavated is determined to be a crack.

(H) Corrosion of or along a longitudinal seam weld.

(I) A gouge or groove greater than 12.5% of nominal wall.

(iv) *Other conditions.* In addition to the conditions listed in paragraphs (h)(4)(i) through (iii) of this section, an operator must evaluate any condition identified by an integrity assessment or information analysis that could impair the integrity of the pipeline, and as appropriate, schedule the condition for remediation. Appendix C of this part contains guidance concerning other conditions that an operator should evaluate.

(i) *What preventive and mitigative measures must an operator take to protect the high consequence area?*—(1) *General requirements.* An operator must take measures to prevent and mitigate the consequences of a pipeline failure that could affect a high consequence area. These measures include conducting a risk analysis of the pipeline segment to identify additional actions to enhance public safety or environmental protection. Such actions may include, but are not limited to, implementing damage prevention best practices, better monitoring of cathodic protection where corrosion is a concern, establishing shorter inspection intervals, installing EFRDs on the pipeline segment, modifying the systems that monitor pressure and detect leaks, providing additional training to personnel on response procedures, conducting drills with local emergency responders and adopting other management controls.

(2) *Risk analysis criteria.* In identifying the need for additional preventive and mitigative measures, an operator must evaluate the likelihood of a pipeline release occurring and how a release could affect the high consequence area. This determination must consider all relevant risk factors, including, but not limited to:

(i) Terrain surrounding the pipeline segment, including drainage systems such as small streams and other smaller waterways that could act as a conduit to the high consequence area;

(ii) Elevation profile;

(iii) Characteristics of the product transported;

(iv) Amount of product that could be released;

(v) Possibility of a spillage in a farm field following the drain tile into a waterway;

(vi) Ditches along side a roadway the pipeline crosses;

(vii) Physical support of the pipeline segment such as by a cable suspension bridge;

(viii) Exposure of the pipeline to operating pressure exceeding established maximum operating pressure.

(3) *Leak detection*. An operator must have a means to detect leaks on its pipeline system. An operator must evaluate the capability of its leak detection means and modify, as necessary, to protect the high consequence area. An operator's evaluation must, at least, consider, the following factors—length and size of the pipeline, type of product carried, the pipeline's proximity to the high consequence area, the swiftness of leak detection, location of nearest response personnel, leak history, and risk assessment results.

(4) *Emergency Flow Restricting Devices (EFRD)*. If an operator determines that an EFRD is needed on a pipeline segment to protect a high consequence area in the event of a hazardous liquid pipeline release, an operator must install the EFRD. In making this determination, an operator must, at least, consider the following factors—the swiftness of leak detection and pipeline shutdown capabilities, the type of commodity carried, the rate of potential leakage, the volume that can be released, topography or pipeline profile, the potential for ignition, proximity to power sources, location of nearest response personnel, specific terrain between the pipeline segment and the high consequence area, and benefits expected by reducing the spill size.

(j) *What is a continual process of evaluation and assessment to maintain a pipeline's integrity?*—(1) *General*. After completing the baseline integrity assessment, an operator must continue to assess the line pipe at specified intervals and periodically evaluate the integrity of each pipeline segment that could affect a high consequence area.

(2) *Evaluation*. An operator must conduct a periodic evaluation as frequently as needed to assure pipeline integrity. An operator must base the frequency of evaluation on risk factors specific to its pipeline, including the factors specified in paragraph (e) of this section. The evaluation must consider the results of the baseline and periodic integrity assessments, information analysis (paragraph (g) of this section), and decisions about remediation, and preventive and mitigative actions (paragraphs (h) and (i) of this section).

(3) *Assessment intervals*. An operator must establish five-year intervals, not to exceed 68 months, for continually assessing the line pipe's integrity. An operator must base the assessment intervals on the risk the line pipe poses to the high consequence area to determine the priority for assessing the pipeline segments. An operator must establish the assessment intervals based on the factors specified in paragraph (e) of this section, the analysis of the results from the last integrity assessment, and the information analysis required by paragraph (g) of this section.

(4) *Variance from the 5-year intervals in limited situations*—(i) *Engineering basis*. An operator may be able to justify an engineering basis for a longer assessment interval on a segment of line pipe. The justification must be supported by a reliable engineering evaluation combined with the use of other technology, such as external monitoring technology, that provides an understanding of the condition of the line pipe equivalent to that which can be obtained from the assessment methods allowed in paragraph (j)(5) of this section. An operator must notify OPS 270 days before the end of the five-year (or less) interval of the justification for a longer interval, and propose an alternative interval. An operator must send the notice to the address specified in paragraph (m) of this section.

(ii) *Unavailable technology*. An operator may require a longer assessment period for a segment of line pipe (for example, because sophisticated internal inspection technology is not available). An operator must justify the reasons why it cannot comply with the required assessment period and must also demonstrate the actions it is taking to evaluate the integrity of the pipeline segment in the interim. An operator must notify OPS 180 days before the end of the five-year (or less) interval that the operator may require a longer assessment interval, and provide an estimate of when the assessment can be completed. An operator must send a notice to the address specified in paragraph (m) of this section.

(5) *Assessment methods.* An operator must assess the integrity of the line pipe by any of the following methods. The methods an operator selects to assess low frequency electric resistance welded pipe or lap welded pipe susceptible to longitudinal seam failure must be capable of assessing seam integrity and of detecting corrosion and deformation anomalies.

(i) Internal inspection tool or tools capable of detecting corrosion and deformation anomalies including dents, gouges and grooves;

(ii) Pressure test conducted in accordance with subpart E of this part;

(iii) External corrosion direct assessment in accordance with § 195.588; or

(iv) Other technology that the operator demonstrates can provide an equivalent understanding of the condition of the line pipe. An operator choosing this option must notify OPS 90 days before conducting the assessment, by sending a notice to the address or facsimile number specified in paragraph (m) of this section.

(k) *What methods to measure program effectiveness must be used?* An operator's program must include methods to measure whether the program is effective in assessing and evaluating the integrity of each pipeline segment and in protecting the high consequence areas. See Appendix C of this part for guidance on methods that can be used to evaluate a program's effectiveness.

(l) *What records must be kept?* (1) An operator must maintain for review during an inspection:

(i) A written integrity management program in accordance with paragraph (b) of this section.

(ii) Documents to support the decisions and analyses, including any modifications, justifications, variances, deviations and determinations made, and actions taken, to implement and evaluate each element of the integrity management program listed in paragraph (f) of this section.

(2) See Appendix C of this part for examples of records an operator would be required to keep.

(m) *How does an operator notify PHMSA?* An operator must provide any notification required by this section by:

(1) Entering the information directly on the Integrity Management Database Web site at *http://primis.phmsa.dot.gov/imdb/;*

(2) Sending the notification to the Information Resources Manager, Office of Pipeline Safety, Pipeline and Hazardous Materials Safety Administration, 1200 New Jersey Avenue, SE., Washington, DC 20590; or

(3) Sending the notification to the Information Resources Manager by facsimile to (202) 366–7128.

[Amdt. 195–70, 65 FR 75406, Dec. 1, 2000, as amended by Amdt. 195–74, 67 FR 1660, 1661, Jan. 14, 2002; Amdt. 195–76, 67 FR 2143, Jan. 16, 2002; 67 FR 46911, July 17, 2002; 70 FR 11140, Mar. 8, 2005; Amdt. 195–85, 70 FR 61576, Oct. 25, 2005; Amdt. 195–87, 72 FR 39017, July 17, 2007; 73 FR 16571, Mar. 28, 2008; 73 FR 31646, June 3, 2008; Amdt. 195–94, 75 FR 48607, Aug. 11, 2010]

Subpart G—Qualification of Pipeline Personnel

SOURCE: Amdt. 195–67, 64 FR 46866, Aug. 27, 1999, unless otherwise noted.

§ 195.501 Scope.

(a) This subpart prescribes the minimum requirements for operator qualification of individuals performing covered tasks on a pipeline facility.

(b) For the purpose of this subpart, a covered task is an activity, identified by the operator, that:

(1) Is performed on a pipeline facility;

(2) Is an operations or maintenance task;

(3) Is performed as a requirement of this part; and

(4) Affects the operation or integrity of the pipeline.

§ 195.503 Definitions.

Abnormal operating condition means a condition identified by the operator that may indicate a malfunction of a component or deviation from normal operations that may:

(a) Indicate a condition exceeding design limits; or

(b) Result in a hazard(s) to persons, property, or the environment.

Evaluation means a process, established and documented by the operator, to determine an individual's ability to

perform a covered task by any of the following:

(a) Written examination;

(b) Oral examination;

(c) Work performance history review;

(d) Observation during:

(1) performance on the job,

(2) on the job training, or

(3) simulations;

(e) Other forms of assessment.

Qualified means that an individual has been evaluated and can:

(a) Perform assigned covered tasks and

(b) Recognize and react to abnormal operating conditions.

[Amdt. 195–67, 64 FR 46866, Aug. 27, 1999, as amended by Amdt. 195–72, 66 FR 43524, Aug. 20, 2001]

§ 195.505 Qualification program.

Each operator shall have and follow a written qualification program. The program shall include provisions to:

(a) Identify covered tasks;

(b) Ensure through evaluation that individuals performing covered tasks are qualified;

(c) Allow individuals that are not qualified pursuant to this subpart to perform a covered task if directed and observed by an individual that is qualified;

(d) Evaluate an individual if the operator has reason to believe that the individual's performance of a covered task contributed to an accident as defined in Part 195;

(e) Evaluate an individual if the operator has reason to believe that the individual is no longer qualified to perform a covered task;

(f) Communicate changes that affect covered tasks to individuals performing those covered tasks;

(g) Identify those covered tasks and the intervals at which evaluation of the individual's qualifications is needed;

(h) After December 16, 2004, provide training, as appropriate, to ensure that individuals performing covered tasks have the necessary knowledge and skills to perform the tasks in a manner that ensures the safe operation of pipeline facilities; and

(i) After December 16, 2004, notify the Administrator or a state agency participating under 49 U.S.C. Chapter 601 if the operator significantly modifies the program after the Administrator or state agency has verified that it complies with this section.

[Amdt. 195–67, 64 FR 46866, Aug. 27, 1999, as amended by Amdt. 195–84, 70 FR 10336, Mar. 3, 2005]

§ 195.507 Recordkeeping.

Each operator shall maintain records that demonstrate compliance with this subpart.

(a) Qualification records shall include:

(1) Identification of qualified individual(s);

(2) Identification of the covered tasks the individual is qualified to perform;

(3) Date(s) of current qualification; and

(4) Qualification method(s).

(b) Records supporting an individual's current qualification shall be maintained while the individual is performing the covered task. Records of prior qualification and records of individuals no longer performing covered tasks shall be retained for a period of five years.

§ 195.509 General.

(a) Operators must have a written qualification program by April 27, 2001. The program must be available for review by the Administrator or by a state agency participating under 49 U.S.C. Chapter 601 if the program is under the authority of that state agency.

(b) Operators must complete the qualification of individuals performing covered tasks by October 28, 2002.

(c) Work performance history review may be used as a sole evaluation method for individuals who were performing a covered task prior to October 26, 1999.

(d) After October 28, 2002, work performance history may not be used as a sole evaluation method.

(e) After December 16, 2004, observation of on-the-job performance may not be used as the sole method of evaluation.

[Amdt. 195–67, 64 FR 46866, Aug. 27, 1999, as amended by Amdt. 195–72, 66 FR 43524, Aug. 20, 2001; Amdt. 195–84, 70 FR 10336, Mar. 3, 2005]

Subpart H—Corrosion Control

SOURCE: Amdt. 195–73, 66 FR 67004, Dec. 27, 2001, unless otherwise noted.

§ 195.551 What do the regulations in this subpart cover?

This subpart prescribes minimum requirements for protecting steel pipelines against corrosion.

§ 195.553 What special definitions apply to this subpart?

As used in this subpart—

Active corrosion means continuing corrosion which, unless controlled, could result in a condition that is detrimental to public safety or the environment.

Buried means covered or in contact with soil.

Direct assessment means an integrity assessment method that utilizes a process to evaluate certain threats (*i.e.*, external corrosion, internal corrosion and stress corrosion cracking) to a pipeline segment's integrity. The process includes the gathering and integration of risk factor data, indirect examination or analysis to identify areas of suspected corrosion, direct examination of the pipeline in these areas, and post assessment evaluation.

Electrical survey means a series of closely spaced pipe-to-soil readings over a pipeline that are subsequently analyzed to identify locations where a corrosive current is leaving the pipeline.

External corrosion direct assessment (ECDA) means a four-step process that combines pre-assessment, indirect inspection, direct examination, and post-assessment to evaluate the threat of external corrosion to the integrity of a pipeline.

Pipeline environment includes soil resistivity (high or low), soil moisture (wet or dry), soil contaminants that may promote corrosive activity, and other known conditions that could affect the probability of active corrosion.

You means operator.

[Amdt. 195–73, 66 FR 67004, Dec. 27, 2001, as amended by Amdt. 195–85, 70 FR 61576, Oct. 25, 2005]

§ 195.555 What are the qualifications for supervisors?

You must require and verify that supervisors maintain a thorough knowledge of that portion of the corrosion control procedures established under § 195.402(c)(3) for which they are responsible for insuring compliance.

§ 195.557 Which pipelines must have coating for external corrosion control?

Except bottoms of aboveground breakout tanks, each buried or submerged pipeline must have an external coating for external corrosion control if the pipeline is—

(a) Constructed, relocated, replaced, or otherwise changed after the applicable date in § 195.401(c), not including the movement of pipe covered by § 195.424; or

(b) Converted under § 195.5 and—

(1) Has an external coating that substantially meets § 195.559 before the pipeline is placed in service; or

(2) Is a segment that is relocated, replaced, or substantially altered.

§ 195.559 What coating material may I use for external corrosion control?

Coating material for external corrosion control under § 195.557 must—

(a) Be designed to mitigate corrosion of the buried or submerged pipeline;

(b) Have sufficient adhesion to the metal surface to prevent under film migration of moisture;

(c) Be sufficiently ductile to resist cracking;

(d) Have enough strength to resist damage due to handling and soil stress;

(e) Support any supplemental cathodic protection; and

(f) If the coating is an insulating type, have low moisture absorption and provide high electrical resistance.

§ 195.561 When must I inspect pipe coating used for external corrosion control?

(a) You must inspect all external pipe coating required by § 195.557 just prior to lowering the pipe into the ditch or submerging the pipe.

(b) You must repair any coating damage discovered.

§ 195.563 Which pipelines must have cathodic protection?

(a) Each buried or submerged pipeline that is constructed, relocated, replaced, or otherwise changed after the applicable date in § 195.401(c) must have cathodic protection. The cathodic protection must be in operation not later than 1 year after the pipeline is constructed, relocated, replaced, or otherwise changed, as applicable.

(b) Each buried or submerged pipeline converted under § 195.5 must have cathodic protection if the pipeline—

(1) Has cathodic protection that substantially meets § 195.571 before the pipeline is placed in service; or

(2) Is a segment that is relocated, replaced, or substantially altered.

(c) All other buried or submerged pipelines that have an effective external coating must have cathodic protection.[1] Except as provided by paragraph (d) of this section, this requirement does not apply to breakout tanks and does not apply to buried piping in breakout tank areas and pumping stations until December 29, 2003.

(d) Bare pipelines, breakout tank areas, and buried pumping station piping must have cathodic protection in places where regulations in effect before January 28, 2002 required cathodic protection as a result of electrical inspections. See previous editions of this part in 49 CFR, parts 186 to 199.

(e) Unprotected pipe must have cathodic protection if required by § 195.573(b).

§ 195.565 How do I install cathodic protection on breakout tanks?

After October 2, 2000, when you install cathodic protection under § 195.563(a) to protect the bottom of an aboveground breakout tank of more than 500 barrels (79.5m^3) capacity built to API Specification 12F, API Standard 620, or API Standard 650 (or its predecessor Standard 12C), you must install the system in accordance with API Recommended Practice 651. However, installation of the system need not comply with API Recommended Practice 651 on any tank for which you note in the corrosion control procedures established under § 195.402(c)(3) why compliance with all or certain provisions of API Recommended Practice 651 is not necessary for the safety of the tank.

§ 195.567 Which pipelines must have test leads and what must I do to install and maintain the leads?

(a) *General.* Except for offshore pipelines, each buried or submerged pipeline or segment of pipeline under cathodic protection required by this subpart must have electrical test leads for external corrosion control. However, this requirement does not apply until December 27, 2004 to pipelines or pipeline segments on which test leads were not required by regulations in effect before January 28, 2002.

(b) *Installation.* You must install test leads as follows:

(1) Locate the leads at intervals frequent enough to obtain electrical measurements indicating the adequacy of cathodic protection.

(2) Provide enough looping or slack so backfilling will not unduly stress or break the lead and the lead will otherwise remain mechanically secure and electrically conductive.

(3) Prevent lead attachments from causing stress concentrations on pipe.

(4) For leads installed in conduits, suitably insulate the lead from the conduit.

(5) At the connection to the pipeline, coat each bared test lead wire and bared metallic area with an electrical insulating material compatible with the pipe coating and the insulation on the wire.

(c) *Maintenance.* You must maintain the test lead wires in a condition that enables you to obtain electrical measurements to determine whether cathodic protection complies with § 195.571.

§ 195.569 Do I have to examine exposed portions of buried pipelines?

Whenever you have knowledge that any portion of a buried pipeline is exposed, you must examine the exposed portion for evidence of external corrosion if the pipe is bare, or if the coating is deteriorated. If you find external

[1] A pipeline does not have an effective external coating material if the current required to cathodically protect the pipeline is substantially the same as if the pipeline were bare.

corrosion requiring corrective action under § 195.585, you must investigate circumferentially and longitudinally beyond the exposed portion (by visual examination, indirect method, or both) to determine whether additional corrosion requiring remedial action exists in the vicinity of the exposed portion.

§ 195.571 What criteria must I use to determine the adequacy of cathodic protection?

Cathodic protection required by this Subpart must comply with one or more of the applicable criteria and other considerations for cathodic protection contained in paragraphs 6.2 and 6.3 of NACE SP 0169 (incorporated by reference, *see* § 195.3).

[Amdt. 195–94, 75 FR 48607, Aug. 11, 2010]

§ 195.573 What must I do to monitor external corrosion control?

(a) *Protected pipelines.* You must do the following to determine whether cathodic protection required by this subpart complies with § 195.571:

(1) Conduct tests on the protected pipeline at least once each calendar year, but with intervals not exceeding 15 months. However, if tests at those intervals are impractical for separately protected short sections of bare or ineffectively coated pipelines, testing may be done at least once every 3 calendar years, but with intervals not exceeding 39 months.

(2) Identify not more than 2 years after cathodic protection is installed, the circumstances in which a close-interval survey or comparable technology is practicable and necessary to accomplish the objectives of paragraph 10.1.1.3 of NACE SP 0169 (incorporated by reference, *see* § 195.3).

(b) *Unprotected pipe.* You must reevaluate your unprotected buried or submerged pipe and cathodically protect the pipe in areas in which active corrosion is found, as follows:

(1) Determine the areas of active corrosion by electrical survey, or where an electrical survey is impractical, by other means that include review and analysis of leak repair and inspection records, corrosion monitoring records, exposed pipe inspection records, and the pipeline environment.

(2) For the period in the first column, the second column prescribes the frequency of evaluation.

Period	Evaluation frequency
Before December 29, 2003 ...	At least once every 5 calendar years, but with intervals not exceeding 63 months.
Beginning December 29, 2003.	At least once every 3 calendar years, but with intervals not exceeding 39 months.

(c) *Rectifiers and other devices.* You must electrically check for proper performance each device in the first column at the frequency stated in the second column.

Device	Check frequency
Rectifier	At least six times each calendar year, but with intervals not exceeding 2½ months.
Reverse current switch.	
Diode.	
Interference bond whose failure would jeopardize structural protection.	
Other interference bond	At least once each calendar year, but with intervals not exceeding 15 months.

(d) *Breakout tanks.* You must inspect each cathodic protection system used to control corrosion on the bottom of an aboveground breakout tank to ensure that operation and maintenance of the system are in accordance with API Recommended Practice 651. However, this inspection is not required if you note in the corrosion control procedures established under § 195.402(c)(3) why compliance with all or certain operation and maintenance provisions of API Recommended Practice 651 is not necessary for the safety of the tank.

(e) *Corrective action.* You must correct any identified deficiency in corrosion control as required by § 195.401(b). However, if the deficiency involves a pipeline in an integrity management program under § 195.452, you must correct the deficiency as required by § 195.452(h).

[Amdt. 195–73, 66 FR 67004, Dec. 27, 2001; 67 FR 70118, Nov. 20, 2002, as amended by Amdt. 195–86, 71 FR 33411, June 9, 2006; Amdt. 195–94, 75 FR 48607, Aug. 11, 2010]

§ 195.575 Which facilities must I electrically isolate and what inspections, tests, and safeguards are required?

(a) You must electrically isolate each buried or submerged pipeline from other metallic structures, unless you electrically interconnect and cathodically protect the pipeline and the other structures as a single unit.

(b) You must install one or more insulating devices where electrical isolation of a portion of a pipeline is necessary to facilitate the application of corrosion control.

(c) You must inspect and electrically test each electrical isolation to assure the isolation is adequate.

(d) If you install an insulating device in an area where a combustible atmosphere is reasonable to foresee, you must take precautions to prevent arcing.

(e) If a pipeline is in close proximity to electrical transmission tower footings, ground cables, or counterpoise, or in other areas where it is reasonable to foresee fault currents or an unusual risk of lightning, you must protect the pipeline against damage from fault currents or lightning and take protective measures at insulating devices.

§ 195.577 What must I do to alleviate interference currents?

(a) For pipelines exposed to stray currents, you must have a program to identify, test for, and minimize the detrimental effects of such currents.

(b) You must design and install each impressed current or galvanic anode system to minimize any adverse effects on existing adjacent metallic structures.

§ 195.579 What must I do to mitigate internal corrosion?

(a) *General*. If you transport any hazardous liquid or carbon dioxide that would corrode the pipeline, you must investigate the corrosive effect of the hazardous liquid or carbon dioxide on the pipeline and take adequate steps to mitigate internal corrosion.

(b) *Inhibitors*. If you use corrosion inhibitors to mitigate internal corrosion, you must—

(1) Use inhibitors in sufficient quantity to protect the entire part of the pipeline system that the inhibitors are designed to protect;

(2) Use coupons or other monitoring equipment to determine the effectiveness of the inhibitors in mitigating internal corrosion; and

(3) Examine the coupons or other monitoring equipment at least twice each calendar year, but with intervals not exceeding 7½ months.

(c) *Removing pipe*. Whenever you remove pipe from a pipeline, you must inspect the internal surface of the pipe for evidence of corrosion. If you find internal corrosion requiring corrective action under § 195.585, you must investigate circumferentially and longitudinally beyond the removed pipe (by visual examination, indirect method, or both) to determine whether additional corrosion requiring remedial action exists in the vicinity of the removed pipe.

(d) *Breakout tanks*. After October 2, 2000, when you install a tank bottom lining in an aboveground breakout tank built to API Specification 12F, API Standard 620, or API Standard 650 (or its predecessor Standard 12C), you must install the lining in accordance with API Recommended Practice 652. However, installation of the lining need not comply with API Recommended Practice 652 on any tank for which you note in the corrosion control procedures established under § 195.402(c)(3) why compliance with all or certain provisions of API Recommended Practice 652 is not necessary for the safety of the tank.

§ 195.581 Which pipelines must I protect against atmospheric corrosion and what coating material may I use?

(a) You must clean and coat each pipeline or portion of pipeline that is exposed to the atmosphere, except pipelines under paragraph (c) of this section.

(b) Coating material must be suitable for the prevention of atmospheric corrosion.

(c) Except portions of pipelines in offshore splash zones or soil-to-air interfaces, you need not protect against atmospheric corrosion any pipeline for which you demonstrate by test, investigation, or experience appropriate to

the environment of the pipeline that corrosion will—

(1) Only be a light surface oxide; or

(2) Not affect the safe operation of the pipeline before the next scheduled inspection.

§ 195.583 What must I do to monitor atmospheric corrosion control?

(a) You must inspect each pipeline or portion of pipeline that is exposed to the atmosphere for evidence of atmospheric corrosion, as follows:

If the pipeline is located:	Then the frequency of inspection is:
Onshore	At least once every 3 calendar years, but with intervals not exceeding 39 months.
Offshore	At least once each calendar year, but with intervals not exceeding 15 months.

(b) During inspections you must give particular attention to pipe at soil-to-air interfaces, under thermal insulation, under disbonded coatings, at pipe supports, in splash zones, at deck penetrations, and in spans over water.

(c) If you find atmospheric corrosion during an inspection, you must provide protection against the corrosion as required by § 195.581.

§ 195.585 What must I do to correct corroded pipe?

(a) *General corrosion*. If you find pipe so generally corroded that the remaining wall thickness is less than that required for the maximum operating pressure of the pipeline, you must replace the pipe. However, you need not replace the pipe if you—

(1) Reduce the maximum operating pressure commensurate with the strength of the pipe needed for serviceability based on actual remaining wall thickness; or

(2) Repair the pipe by a method that reliable engineering tests and analyses show can permanently restore the serviceability of the pipe.

(b) *Localized corrosion pitting*. If you find pipe that has localized corrosion pitting to a degree that leakage might result, you must replace or repair the pipe, unless you reduce the maximum operating pressure commensurate with the strength of the pipe based on actual remaining wall thickness in the pits.

§ 195.587 What methods are available to determine the strength of corroded pipe?

Under § 195.585, you may use the procedure in ASME B31G, ''Manual for Determining the Remaining Strength of Corroded Pipelines,'' or the procedure developed by AGA/Battelle, ''A Modified Criterion for Evaluating the Remaining Strength of Corroded Pipe (with RSTRENG disk),'' to determine the strength of corroded pipe based on actual remaining wall thickness. These procedures apply to corroded regions that do not penetrate the pipe wall, subject to the limitations set out in the respective procedures.

§ 195.588 What standards apply to direct assessment?

(a) If you use direct assessment on an onshore pipeline to evaluate the effects of external corrosion, you must follow the requirements of this section for performing external corrosion direct assessment. This section does not apply to methods associated with direct assessment, such as close interval surveys, voltage gradient surveys, or examination of exposed pipelines, when used separately from the direct assessment process.

(b) The requirements for performing external corrosion direct assessment are as follows:

(1) *General*. You must follow the requirements of NACE SP0502 (incorporated by reference, *see* § 195.3). Also, you must develop and implement a External Corrosion Direct Assessment (ECDA) plan that includes procedures addressing pre-assessment, indirect examination, direct examination, and post-assessment.

(2) *Pre-assessment*. In addition to the requirements in Section 3 of NACE SP0502 (incorporated by reference, *see* § 195.3), the ECDA plan procedures for pre-assessment must include—

(i) Provisions for applying more restrictive criteria when conducting ECDA for the first time on a pipeline segment;

(ii) The basis on which you select at least two different, but complementary, indirect assessment tools to assess each ECDA region; and

(iii) If you utilize an indirect inspection method not described in Appendix A of NACE SP0502 (incorporated by reference, *see* § 195.3), you must demonstrate the applicability, validation basis, equipment used, application procedure, and utilization of data for the inspection method.

(3) *Indirect examination*. In addition to the requirements in Section 4 of NACE SP0502 (incorporated by reference, *see* § 195.3), the procedures for indirect examination of the ECDA regions must include—

(i) Provisions for applying more restrictive criteria when conducting ECDA for the first time on a pipeline segment;

(ii) Criteria for identifying and documenting those indications that must be considered for excavation and direct examination, including at least the following:

(A) The known sensitivities of assessment tools;

(B) The procedures for using each tool; and

(C) The approach to be used for decreasing the physical spacing of indirect assessment tool readings when the presence of a defect is suspected;

(iii) For each indication identified during the indirect examination, criteria for—

(A) Defining the urgency of excavation and direct examination of the indication; and

(B) Defining the excavation urgency as immediate, scheduled, or monitored; and

(iv) Criteria for scheduling excavations of indications in each urgency level.

(4) *Direct examination*. In addition to the requirements in Section 5 of NACE SP0502 (incorporated by reference, *see* § 195.3), the procedures for direct examination of indications from the indirect examination must include—

(i) Provisions for applying more restrictive criteria when conducting ECDA for the first time on a pipeline segment;

(ii) Criteria for deciding what action should be taken if either:

(A) Corrosion defects are discovered that exceed allowable limits (Section 5.5.2.2 of NACE SP0502 (incorporated by reference, *see* § 195.3) provides guidance for criteria); or

(B) Root cause analysis reveals conditions for which ECDA is not suitable (Section 5.6.2 of NACE SP0502 (incorporated by reference, *see* § 195.3) provides guidance for criteria);

(iii) Criteria and notification procedures for any changes in the ECDA plan, including changes that affect the severity classification, the priority of direct examination, and the time frame for direct examination of indications; and

(iv) Criteria that describe how and on what basis you will reclassify and reprioritize any of the provisions specified in Section 5.9 of NACE SP0502 (incorporated by reference, *see* § 195.3).

(5) *Post assessment and continuing evaluation*. In addition to the requirements in Section 6 of NACE SP 0502 (incorporated by reference, *see* § 195.3), the procedures for post assessment of the effectiveness of the ECDA process must include—

(i) Measures for evaluating the long-term effectiveness of ECDA in addressing external corrosion in pipeline segments; and

(ii) Criteria for evaluating whether conditions discovered by direct examination of indications in each ECDA region indicate a need for reassessment of the pipeline segment at an interval less than that specified in Sections 6.2 and 6.3 of NACE SP0502 (*see* appendix D of NACE SP0502) (incorporated by reference, *see* § 195.3).

[Amdt. 195–85, 70 FR 61576, Oct. 25, 2005, as amended by Amdt. 195–94, 75 FR 48607, Aug. 11, 2010]

§ 195.589 What corrosion control information do I have to maintain?

(a) You must maintain current records or maps to show the location of—

(1) Cathodically protected pipelines;

(2) Cathodic protection facilities, including galvanic anodes, installed after January 28, 2002; and

(3) Neighboring structures bonded to cathodic protection systems.

(b) Records or maps showing a stated number of anodes, installed in a stated

manner or spacing, need not show specific distances to each buried anode.

(c) You must maintain a record of each analysis, check, demonstration, examination, inspection, investigation, review, survey, and test required by this subpart in sufficient detail to demonstrate the adequacy of corrosion control measures or that corrosion requiring control measures does not exist. You must retain these records for at least 5 years, except that records related to §§ 195.569, 195.573(a) and (b), and 195.579(b)(3) and (c) must be retained for as long as the pipeline remains in service.

APPENDIX A TO PART 195—DELINEATION BETWEEN FEDERAL AND STATE JURISDICTION—STATEMENT OF AGENCY POLICY AND INTERPRETATION

In 1979, Congress enacted comprehensive safety legislation governing the transportation of hazardous liquids by pipeline, the Hazardous Liquids Pipeline Safety Act of 1979, 49 U.S.C. 2001 *et seq.* (HLPSA). The HLPSA expanded the existing statutory authority for safety regulation, which was limited to transportation by common carriers in interstate and foreign commerce, to transportation through facilities used in or affecting interstate or foreign commerce. It also added civil penalty, compliance order, and injunctive enforcement authorities to the existing criminal sanctions. Modeled largely on the Natural Gas Pipeline Safety Act of 1968, 49 U.S.C. 1671 *et seq.* (NGPSA), the HLPSA provides for a national hazardous liquid pipeline safety program with nationally uniform minimal standards and with enforcement administered through a Federal-State partnership. The HLPSA leaves to exclusive Federal regulation and enforcement the ''interstate pipeline facilities,'' those used for the pipeline transportation of hazardous liquids in interstate or foreign commerce. For the remainder of the pipeline facilities, denominated ''intrastate pipeline facilities,'' the HLPSA provides that the same Federal regulation and enforcement will apply unless a State certifies that it will assume those responsibilities. A certified State must adopt the same minimal standards but may adopt additional more stringent standards so long as they are compatible. Therefore, in States which participate in the hazardous liquid pipeline safety program through certification, it is necessary to distinguish the interstate from the intrastate pipeline facilities.

In deciding that an administratively practical approach was necessary in distinguishing between interstate and intrastate liquid pipeline facilities and in determining how best to accomplish this, DOT has logically examined the approach used in the NGPSA. The NGPSA defines the interstate gas pipeline facilities subject to exclusive Federal jurisdiction as those subject to the economic regulatory jurisdiction of the Federal Energy Regulatory Commission (FERC). Experience has proven this approach practical. Unlike the NGPSA however, the HLPSA has no specific reference to FERC jurisdiction, but instead defines interstate liquid pipeline facilities by the more commonly used means of specifying the end points of the transportation involved. For example, the economic regulatory jurisdiction of FERC over the transportation of both gas and liquids by pipeline is defined in much the same way. In implementing the HLPSA DOT has sought a practicable means of distinguishing between interstate and intrastate pipeline facilities that provide the requisite degree of certainty to Federal and State enforcement personnel and to the regulated entities. DOT intends that this statement of agency policy and interpretation provide that certainty.

In 1981, DOT decided that the inventory of liquid pipeline facilities identified as subject to the jurisdiction of FERC approximates the HLPSA category of ''interstate pipeline facilities.'' Administrative use of the FERC inventory has the added benefit of avoiding the creation of a separate Federal scheme for determination of jurisdiction over the same regulated entities. DOT recognizes that the FERC inventory is only an approximation and may not be totally satisfactory without some modification. The difficulties stem from some significant differences in the economic regulation of liquid and of natural gas pipelines. There is an affirmative assertion of jurisdiction by FERC over natural gas pipelines through the issuance of certificates of public convenience and necessity prior to commencing operations. With liquid pipelines, there is only a rebuttable presumption of jurisdiction created by the filing by pipeline operators of tariffs (or concurrences) for movement of liquids through existing facilities. Although FERC does police the filings for such matters as compliance with the general duties of common carriers, the question of jurisdiction is normally only aired upon complaint. While any person, including State or Federal agencies, can avail themselves of the FERC forum by use of the complaint process, that process has only been rarely used to review jurisdictional matters (probably because of the infrequency of real disputes on the issue). Where the issue has arisen, the reviewing body has noted the need to examine various criteria primarily of an economic nature. DOT believes that, in most cases, the formal FERC forum can better receive and evaluate the type of information that is needed to make decisions of this nature than can DOT.

In delineating which liquid pipeline facilities are interstate pipeline facilities within the meaning of the HLPSA, DOT will generally rely on the FERC filings; that is, if there is a tariff or concurrence filed with FERC governing the transportation of hazardous liquids over a pipeline facility or if there has been an exemption from the obligation to file tariffs obtained from FERC, then DOT will, as a general rule, consider the facility to be an interstate pipeline facility within the meaning of the HLPSA. The types of situations in which DOT will ignore the existence or non-existence of a filing with FERC will be limited to those cases in which it appears obvious that a complaint filed with FERC would be successful or in which blind reliance on a FERC filing would result in a situation clearly not intended by the HLPSA such as a pipeline facility not being subject to either State or Federal safety regulation. DOT anticipates that the situations in which there is any question about the validity of the FERC filings as a ready reference will be few and that the actual variations from reliance on those filings will be rare. The following examples indicate the types of facilities which DOT believes are interstate pipeline facilities subject to the HLPSA despite the lack of a filing with FERC and the types of facilities over which DOT will generally defer to the jurisdiction of a certifying state despite the existence of a filing with FERC.

Example 1. Pipeline company P operates a pipeline from ''Point A'' located in State X to ''Point B'' (also in X). The physical facilities never cross a state line and do not connect with any other pipeline which does cross a state line. Pipeline company P also operates another pipeline between ''Point C'' in State X and ''Point D'' in an adjoining State Y. Pipeline company P files a tariff with FERC for transportation from ''Point A'' to ''Point B'' as well as for transportation from ''Point C'' to ''Point D.'' DOT will ignore filing for the line from ''Point A'' to ''Point B'' and consider the line to be intrastate.

Example 2. Same as in example 1 except that P does not file any tariffs with FERC. DOT will assume jurisdiction of the line between ''Point C'' and ''Point D.''

Example 3. Same as in example 1 except that P files its tariff for the line between ''Point C'' and ''Point D'' not only with FERC but also with State X. DOT will rely on the FERC filing as indication of interstate commerce.

Example 4. Same as in example 1 except that the pipeline from ''Point A'' to ''Point B'' (in State X) connects with a pipeline operated by another company transports liquid between ''Point B'' (in State X) and ''Point D'' (in State Y). DOT will rely on the FERC filing as indication of interstate commerce.

Example 5. Same as in example 1 except that the line between ''Point C'' and ''Point D'' has a lateral line connected to it. The lateral is located entirely with State X. DOT will rely on the existence or non-existence of a FERC filing covering transportation over that lateral as determinative of interstate commerce.

Example 6. Same as in example 1 except that the certified agency in State X has brought an enforcement action (under the pipeline safety laws) against P because of its operation of the line between ''Point A'' and ''Point B''. P has successfully defended against the action on jurisdictional grounds. DOT will assume jurisdiction if necessary to avoid the anomaly of a pipeline subject to neither State or Federal safety enforcement. DOT's assertion of jurisdiction in such a case would be based on the gap in the state's enforcement authority rather than a DOT decision that the pipeline is an interstate pipeline facility.

Example 7. Pipeline Company P operates a pipeline that originates on the Outer Continental Shelf. P does not file any tariff for that line with FERC. DOT will consider the pipeline to be an interstate pipeline facility.

Example 8. Pipeline Company P is constructing a pipeline from ''Point C'' (in State X) to ''Point D'' (in State Y). DOT will consider the pipeline to be an interstate pipeline facility.

Example 9. Pipeline company P is constructing a pipeline from ''Point C'' to ''Point E'' (both in State X) but intends to file tariffs with FERC in the transportation of hazardous liquid in interstate commerce. Assuming there is some connection to an interstate pipeline facility, DOT will consider this line to be an interstate pipeline facility.

Example 10. Pipeline Company P has operated a pipeline subject to FERC economic regulation. Solely because of some statutory economic deregulation, that pipeline is no longer regulated by FERC. DOT will continue to consider that pipeline to be an interstate pipeline facility.

As seen from the examples, the types of situations in which DOT will not defer to the FERC regulatory scheme are generally clear-cut cases. For the remainder of the situations where variation from the FERC scheme would require DOT to replicate the forum already provided by FERC and to consider economic factors better left to that agency, DOT will decline to vary its reliance on the FERC filings unless, of course, not doing so would result in situations clearly not intended by the HLPSA.

[Amdt. 195–33, 50 FR 15899, Apr. 23, 1985]

APPENDIX B TO PART 195—RISK-BASED ALTERNATIVE TO PRESSURE TESTING OLDER HAZARDOUS LIQUID AND CARBON DIOXIDE PIPELINES

RISK-BASED ALTERNATIVE

This Appendix provides guidance on how a risk-based alternative to pressure testing older hazardous liquid and carbon dioxide pipelines rule allowed by §195.303 will work. This risk-based alternative establishes test priorities for older pipelines, not previously pressure tested, based on the inherent risk of a given pipeline segment. The first step is to determine the classification based on the type of pipe or on the pipeline segment's proximity to populated or environmentally sensitive area. Secondly, the classifications must be adjusted based on the pipeline failure history, product transported, and the release volume potential.

Tables 2–6 give definitions of risk classification A, B, and C facilities. For the purposes of this rule, pipeline segments containing high risk electric resistance-welded pipe (ERW pipe) and lapwelded pipe manufactured prior to 1970 and considered a risk classification C or B facility shall be treated as the top priority for testing because of the higher risk associated with the susceptibility of this pipe to longitudinal seam failures.

In all cases, operators shall annually, at intervals not to exceed 15 months, review their facilities to reassess the classification and shall take appropriate action within two years or operate the pipeline system at a lower pressure. Pipeline failures, changes in the characteristics of the pipeline route, or changes in service should all trigger a reassessment of the originally classification.

Table 1 explains different levels of test requirements depending on the inherent risk of a given pipeline segment. The overall risk classification is determined based on the type of pipe involved, the facility's location, the product transported, the relative volume of flow and pipeline failure history as determined from Tables 2–6.

TABLE 1. TEST REQUIREMENTS—MAINLINE SEGMENTS OUTSIDE OF TERMINALS, STATIONS, AND TANK FARMS

Pipeline segment	Risk classification	Test deadline [1]	Test medium
Pre-1970 Pipeline Segments susceptible to longitudinal seam failures [2].	C or B	12/7/2000 [3]	Water only.
	A	12/7/2002 [3]	Water only.
All Other Pipeline Segments	C	12/7/2002 [4]	Water only.
	B	12/7/2004 [4]	Water/Liq. [5]
	A	Additional pressure testing not required.	

[1] If operational experience indicates a history of past failures for a particular pipeline segment, failure causes (time-dependent defects due to corrosion, construction, manufacture, or transmission problems, etc.) shall be reviewed in determining risk classification (See Table 6) and the timing of the pressure test should be accelerated.

[2] All pre-1970 ERW pipeline segments may not require testing. In determining which ERW pipeline segments should be included in this category, an operator must consider the seam-related leak history of the pipe and pipe manufacturing information as available, which may include the pipe steel's mechanical properties, including fracture toughness; the manufacturing process and controls related to seam properties, including whether the ERW process was high-frequency or low-frequency, whether the weld seam was heat treated, whether the seam was inspected, the test pressure and duration during mill hydrotest; the quality control of the steel-making process; and other factors pertinent to seam properties and quality.

[3] For those pipeline operators with extensive mileage of pre-1970 ERW pipe, any waiver requests for timing relief should be supported by an assessment of hazards in accordance with location, product, volume, and probability of failure considerations consistent with Tables 3, 4, 5, and 6.

[4] A magnetic flux leakage or ultrasonic internal inspection survey may be utilized as an alternative to pressure testing where leak history and operating experience do not indicate leaks caused by longitudinal cracks or seam failures.

[5] Pressure tests utilizing a hydrocarbon liquid may be conducted, but only with a liquid which does not vaporize rapidly.

Using LOCATION, PRODUCT, VOLUME, and FAILURE HISTORY ''Indicators'' from Tables 3, 4, 5, and 6 respectively, the overall risk classification of a given pipeline or pipeline segment can be established from Table 2. The LOCATION Indicator is the primary factor which determines overall risk, with the PRODUCT, VOLUME, and PROBABILITY OF FAILURE Indicators used to adjust to a higher or lower overall risk classification per the following table.

TABLE 2—RISK CLASSIFICATION

Risk classification	Hazard location indicator	Product/volume indicator	Probability of failure indicator
A	L or M	L/L	L.
B		Not A or C Risk Classification	
C	H	Any	Any.

H=High M=Moderate L=Low.

NOTE: For Location, Product, Volume, and Probability of Failure Indicators, see Tables 3, 4, 5, and 6.

Table 3 is used to establish the LOCATION Indicator used in Table 2. Based on the population and environment characteristics associated with a pipeline facility's location, a LOCATION Indicator of H, M or L is selected.

TABLE 3—LOCATION INDICATORS—PIPELINE SEGMENTS

Indicator	Population [1]	Environment [2]
H	Non-rural areas	Environmentally sensitive [2] areas.
M		
L	Rural areas	Not environmentally sensitive [2] areas.

[1] The effects of potential vapor migration should be considered for pipeline segments transporting highly volatile or toxic products.
[2] We expect operators to use their best judgment in applying this factor.

Tables 4, 5 and 6 are used to establish the PRODUCT, VOLUME, and PROBABILITY OF FAILURE Indicators respectively, in Table 2. The PRODUCT Indicator is selected from Table 4 as H, M, or L based on the acute and chronic hazards associated with the product transported. The VOLUME Indicator is selected from Table 5 as H, M, or L based on the nominal diameter of the pipeline. The Probability of Failure Indicator is selected from Table 6.

TABLE 4—PRODUCT INDICATORS

Indicator	Considerations	Product examples
H	(Highly volatile and flammable)	(Propane, butane, Natural Gas Liquid (NGL), ammonia)
	Highly toxic	(Benzene, high Hydrogen Sulfide content crude oils).
M	Flammable—flashpoint <100F	(Gasoline, JP4, low flashpoint crude oils).
L	Non-flammable—flashpoint 100+F	(Diesel, fuel oil, kerosene, JP5, most crude oils).
	Highly volatile and non-flammable/non-toxic.	Carbon Dioxide.

Considerations: The degree of acute and chronic toxicity to humans, wildlife, and aquatic life; reactivity; and, volatility, flammability, and water solubility determine the Product Indicator. Comprehensive Environmental Response, Compensation and Liability Act Reportable Quantity values can be used as an indication of chronic toxicity. National Fire Protection Association health factors can be used for rating acute hazards.

TABLE 5—VOLUME INDICATORS

Indicator	Line size
H	≥18″.
M	10″–16″ nominal diameters.
L	≤8″ nominal diameter.

H=High M=Moderate L=Low.

Table 6 is used to establish the PROBABILITY OF FAILURE Indicator used in Table 2. The ''Probability of Failure'' Indicator is selected from Table 6 as H or L.

TABLE 6—PROBABILITY OF FAILURE INDICATORS

[in each haz. location]

Indicator	Failure history (time-dependent defects) [2]
H [1]	>Three spills in last 10 years.

TABLE 6—PROBABILITY OF FAILURE INDICATORS—Continued

[in each haz. location]

Indicator	Failure history (time-dependent defects) [2]
L	≤Three spills in last 10 years.

H=High L=Low.

[1] Pipeline segments with greater than three product spills in the last 10 years should be reviewed for failure causes as described in subnote [2]. The pipeline operator should make an appropriate investigation and reach a decision based on sound engineering judgment, and be able to demonstrate the basis of the decision.

[2] Time-Dependent Defects are defects that result in spills due to corrosion, gouges, or problems developed during manufacture, construction or operation, etc.

[Amdt. 195–65, 63 FR 59480, Nov. 4, 1998; 64 FR 6815, Feb. 11, 1999]

APPENDIX C TO PART 195—GUIDANCE FOR IMPLEMENTATION OF AN INTEGRITY MANAGEMENT PROGRAM

This Appendix gives guidance to help an operator implement the requirements of the integrity management program rule in §§ 195.450 and 195.452. Guidance is provided on:

(1) Information an operator may use to identify a high consequence area and factors

an operator can use to consider the potential impacts of a release on an area;

(2) Risk factors an operator can use to determine an integrity assessment schedule;

(3) Safety risk indicator tables for leak history, volume or line size, age of pipeline, and product transported, an operator may use to determine if a pipeline segment falls into a high, medium or low risk category;

(4) Types of internal inspection tools an operator could use to find pipeline anomalies;

(5) Measures an operator could use to measure an integrity management program's performance; and

(6) Types of records an operator will have to maintain.

(7) Types of conditions that an integrity assessment may identify that an operator should include in its required schedule for evaluation and remediation.

I. Identifying a high consequence area and factors for considering a pipeline segment's potential impact on a high consequence area.

A. The rule defines a High Consequence Area as a high population area, an other populated area, an unusually sensitive area, or a commercially navigable waterway. The Office of Pipeline Safety (OPS) will map these areas on the National Pipeline Mapping System (NPMS). An operator, member of the public or other government agency may view and download the data from the NPMS home page *http://www.npms.phmsa.gov/*. OPS will maintain the NPMS and update it periodically. However, it is an operator's responsibility to ensure that it has identified all high consequence areas that could be affected by a pipeline segment. An operator is also responsible for periodically evaluating its pipeline segments to look for population or environmental changes that may have occurred around the pipeline and to keep its program current with this information. (Refer to §195.452(d)(3).)

(1) Digital Data on populated areas available on U.S. Census Bureau maps.

(2) Geographic Database on the commercial navigable waterways available on *http://www.bts.gov/gis/ntatlas/networks.html*.

(3) The Bureau of Transportation Statistics database that includes commercially navigable waterways and non-commercially navigable waterways. The database can be downloaded from the BTS website at *http://www.bts.gov/gis/ntatlas/networks.html*.

B. The rule requires an operator to include a process in its program for identifying which pipeline segments could affect a high consequence area and to take measures to prevent and mitigate the consequences of a pipeline failure that could affect a high consequence area. (See §§195.452 (f) and (i).) Thus, an operator will need to consider how each pipeline segment could affect a high consequence area. The primary source for the listed risk factors is a US DOT study on instrumented Internal Inspection devices (November 1992). Other sources include the National Transportation Safety Board, the Environmental Protection Agency and the Technical Hazardous Liquid Pipeline Safety Standards Committee. The following list provides guidance to an operator on both the mandatory and additional factors:

(1) Terrain surrounding the pipeline. An operator should consider the contour of the land profile and if it could allow the liquid from a release to enter a high consequence area. An operator can get this information from topographical maps such as U.S. Geological Survey quadrangle maps.

(2) Drainage systems such as small streams and other smaller waterways that could serve as a conduit to a high consequence area.

(3) Crossing of farm tile fields. An operator should consider the possibility of a spillage in the field following the drain tile into a waterway.

(4) Crossing of roadways with ditches along the side. The ditches could carry a spillage to a waterway.

(5) The nature and characteristics of the product the pipeline is transporting (refined products, crude oils, highly volatile liquids, etc.) Highly volatile liquids becomes gaseous when exposed to the atmosphere. A spillage could create a vapor cloud that could settle into the lower elevation of the ground profile.

(6) Physical support of the pipeline segment such as by a cable suspension bridge. An operator should look for stress indicators on the pipeline (strained supports, inadequate support at towers), atmospheric corrosion, vandalism, and other obvious signs of improper maintenance.

(7) Operating conditions of the pipeline (pressure, flow rate, etc.). Exposure of the pipeline to an operating pressure exceeding the established maximum operating pressure.

(8) The hydraulic gradient of the pipeline.

(9) The diameter of the pipeline, the potential release volume, and the distance between the isolation points.

(10) Potential physical pathways between the pipeline and the high consequence area.

(11) Response capability (time to respond, nature of response).

(12) Potential natural forces inherent in the area (flood zones, earthquakes, subsidence areas, etc.)

II. Risk factors for establishing frequency of assessment.

A. By assigning weights or values to the risk factors, and using the risk indicator tables, an operator can determine the priority for assessing pipeline segments, beginning with those segments that are of highest risk, that have not previously been assessed. This list provides some guidance on some of the risk factors to consider (see §195.452(e)). An

operator should also develop factors specific to each pipeline segment it is assessing, including:

(1) Populated areas, unusually sensitive environmental areas, National Fish Hatcheries, commercially navigable waters, areas where people congregate.

(2) Results from previous testing/inspection. (See § 195.452(h).)

(3) Leak History. (See leak history risk table.)

(4) Known corrosion or condition of pipeline. (See § 195.452(g).)

(5) Cathodic protection history.

(6) Type and quality of pipe coating (disbonded coating results in corrosion).

(7) Age of pipe (older pipe shows more corrosion—may be uncoated or have an ineffective coating) and type of pipe seam. (See Age of Pipe risk table.)

(8) Product transported (highly volatile, highly flammable and toxic liquids present a greater threat for both people and the environment) (see Product transported risk table.)

(9) Pipe wall thickness (thicker walls give a better safety margin)

(10) Size of pipe (higher volume release if the pipe ruptures).

(11) Location related to potential ground movement (e.g., seismic faults, rock quarries, and coal mines); climatic (permafrost causes settlement—Alaska); geologic (landslides or subsidence).

(12) Security of throughput (effects on customers if there is failure requiring shutdown).

(13) Time since the last internal inspection/pressure testing.

(14) With respect to previously discovered defects/anomalies, the type, growth rate, and size.

(15) Operating stress levels in the pipeline.

(16) Location of the pipeline segment as it relates to the ability of the operator to detect and respond to a leak. (*e.g.*, pipelines deep underground, or in locations that make leak detection difficult without specific sectional monitoring and/or significantly impede access for spill response or any other purpose).

(17) Physical support of the segment such as by a cable suspension bridge.

(18) Non-standard or other than recognized industry practice on pipeline installation (*e.g.*, horizontal directional drilling).

B. *Example:* This example illustrates a hypothetical model used to establish an integrity assessment schedule for a hypothetical pipeline segment. After we determine the risk factors applicable to the pipeline segment, we then assign values or numbers to each factor, such as, high (5), moderate (3), or low (1). We can determine an overall risk classification (A, B, C) for the segment using the risk tables and a sliding scale (values 5 to 1) for risk factors for which tables are not provided. We would classify a segment as C if it fell above ⅔ of maximum value (highest overall risk value for any one segment when compared with other segments of a pipeline), a segment as B if it fell between ⅓ to ⅔ of maximum value, and the remaining segments as A.

i. For the baseline assessment schedule, we would plan to assess 50% of all pipeline segments covered by the rule, beginning with the highest risk segments, within the first 3½ years and the remaining segments within the seven-year period. For the continuing integrity assessments, we would plan to assess the C segments within the first two (2) years of the schedule, the segments classified as moderate risk no later than year three or four and the remaining lowest risk segments no later than year five (5).

ii. For our hypothetical pipeline segment, we have chosen the following risk factors and obtained risk factor values from the appropriate table. The values assigned to the risk factors are for illustration only.

Age of pipeline: assume 30 years old (refer to ''Age of Pipeline'' risk table)—
Risk Value=5

Pressure tested: tested once during construction—
Risk Value=5

Coated: (yes/no)—yes

Coating Condition: Recent excavation of suspected areas showed holidays in coating (potential corrosion risk)—
Risk Value=5

Cathodically Protected: (yes/no)—yes—Risk Value=1

Date cathodic protection installed: five years after pipeline was constructed (Cathodic protection installed within one year of the pipeline's construction is generally considered low risk.)—Risk Value=3

Close interval survey: (yes/no)—no—Risk Value =5

Internal Inspection tool used: (yes/no)—yes. *Date of pig run?* In last five years—Risk Value=1

Anomalies found: (yes/no)—yes, but do not pose an immediate safety risk or environmental hazard—Risk Value=3

Leak History: yes, one spill in last 10 years. (refer to ''Leak History'' risk table)—Risk Value=2

Product transported: Diesel fuel. Product low risk. (refer to ''Product'' risk table)—Risk Value=1

Pipe size: 16 inches. Size presents moderate risk (refer to ''Line Size'' risk table)—Risk Value=3

iii. Overall risk value for this hypothetical segment of pipe is 34. Assume we have two other pipeline segments for which we conduct similar risk rankings. The second pipeline segment has an overall risk value of 20, and the third segment, 11. For the baseline assessment we would establish a schedule where we assess the first segment (highest

risk segment) within two years, the second segment within five years and the third segment within seven years. Similarly, for the continuing integrity assessment, we could establish an assessment schedule where we assess the highest risk segment no later than the second year, the second segment no later than the third year, and the third segment no later than the fifth year.

III. Safety risk indicator tables for leak history, volume or line size, age of pipeline, and product transported.

LEAK HISTORY

Safety risk indicator	Leak history (Time-dependent defects) [1]
High	>3 Spills in last 10 years
Low	<3 Spills in last 10 years

[1] Time-dependent defects are those that result in spills due to corrosion, gouges, or problems developed during manufacture, construction or operation, etc.

LINE SIZE OR VOLUME TRANSPORTED

Safety risk indicator	Line size
High	≥18″
Moderate	10″—16″ nominal diameters
Low	≤8″ nominal diameter

AGE OF PIPELINE

Safety risk indicator	Age Pipeline condition dependent) [1]
High	>25 years
Low	<25 years

[1] Depends on pipeline's coating & corrosion condition, and steel quality, toughness, welding.

PRODUCT TRANSPORTED

Safety risk indicator	Considerations [1]	Product examples
High	(Highly volatile and flammable).	(Propane, butane, Natural Gas Liquid (NGL), ammonia).
	Highly toxic	(Benzene, high Hydrogen Sulfide content crude oils).
Medium.	Flammable—flashpoint <100F.	(Gasoline, JP4, low flashpoint crude oils).
Low	Non-flammable—flashpoint 100+F.	(Diesel, fuel oil, kerosene, JP5, most crude oils).

[1] The degree of acute and chronic toxicity to humans, wildlife, and aquatic life; reactivity; and, volatility, flammability, and water solubility determine the Product Indicator. Comprehensive Environmental Response, Compensation and Liability Act Reportable Quantity values may be used as an indication of chronic toxicity. National Fire Protection Association health factors may be used for rating acute hazards.

IV. Types of internal inspection tools to use.

An operator should consider at least two types of internal inspection tools for the integrity assessment from the following list. The type of tool or tools an operator selects will depend on the results from previous internal inspection runs, information analysis and risk factors specific to the pipeline segment:

(1) Geometry Internal inspection tools for detecting changes to ovality, e.g., bends, dents, buckles or wrinkles, due to construction flaws or soil movement, or other outside force damage;

(2) Metal Loss Tools (Ultrasonic and Magnetic Flux Leakage) for determining pipe wall anomalies, e.g., wall loss due to corrosion.

(3) Crack Detection Tools for detecting cracks and crack-like features, e.g., stress corrosion cracking (SCC), fatigue cracks, narrow axial corrosion, toe cracks, hook cracks, etc.

V. Methods to measure performance.

A. *General*. (1) This guidance is to help an operator establish measures to evaluate the effectiveness of its integrity management program. The performance measures required will depend on the details of each integrity management program and will be based on an understanding and analysis of the failure mechanisms or threats to integrity of each pipeline segment.

(2) An operator should select a set of measurements to judge how well its program is performing. An operator's objectives for its program are to ensure public safety, prevent or minimize leaks and spills and prevent property and environmental damage. A typical integrity management program will be an ongoing program and it may contain many elements. Therefore, several performance measure are likely to be needed to measure the effectiveness of an ongoing program.

B. *Performance measures*. These measures show how a program to control risk on pipeline segments that could affect a high consequence area is progressing under the integrity management requirements. Performance measures generally fall into three categories:

(1) Selected Activity Measures—Measures that monitor the surveillance and preventive activities the operator has implemented. These measure indicate how well an operator is implementing the various elements of its integrity management program.

(2) Deterioration Measures—Operation and maintenance trends that indicate when the integrity of the system is weakening despite preventive measures. This category of performance measure may indicate that the system condition is deteriorating despite well executed preventive activities.

(3) Failure Measures—Leak History, incident response, product loss, etc. These measures will indicate progress towards fewer spills and less damage.

C. *Internal vs. External Comparisons.* These comparisons show how a pipeline segment that could affect a high consequence area is progressing in comparison to the operator's other pipeline segments that are not covered by the integrity management requirements and how that pipeline segment compares to other operators' pipeline segments.

(1) Internal—Comparing data from the pipeline segment that could affect the high consequence area with data from pipeline segments in other areas of the system may indicate the effects from the attention given to the high consequence area.

(2) External—Comparing data external to the pipeline segment (e.g., OPS incident data) may provide measures on the frequency and size of leaks in relation to other companies.

D. *Examples.* Some examples of performance measures an operator could use include—

(1) A performance measurement goal to reduce the total volume from unintended releases by -% (percent to be determined by operator) with an ultimate goal of zero.

(2) A performance measurement goal to reduce the total number of unintended releases (based on a threshold of 5 gallons) by ____-% (percent to be determined by operator) with an ultimate goal of zero.

(3) A performance measurement goal to document the percentage of integrity management activities completed during the calendar year.

(4) A performance measurement goal to track and evaluate the effectiveness of the operator's community outreach activities.

(5) A narrative description of pipeline system integrity, including a summary of performance improvements, both qualitative and quantitative, to an operator's integrity management program prepared periodically.

(6) A performance measure based on internal audits of the operator's pipeline system per 49 CFR Part 195.

(7) A performance measure based on external audits of the operator's pipeline system per 49 CFR Part 195.

(8) A performance measure based on operational events (for example: relief occurrences, unplanned valve closure, SCADA outages, etc.) that have the potential to adversely affect pipeline integrity.

(9) A performance measure to demonstrate that the operator's integrity management program reduces risk over time with a focus on high risk items.

(10) A performance measure to demonstrate that the operator's integrity management program for pipeline stations and terminals reduces risk over time with a focus on high risk items.

VI. Examples of types of records an operator must maintain.

The rule requires an operator to maintain certain records. (See § 195.452(l)). This section provides examples of some records that an operator would have to maintain for inspection to comply with the requirement. This is not an exhaustive list.

(1) a process for identifying which pipelines could affect a high consequence area and a document identifying all pipeline segments that could affect a high consequence area;

(2) a plan for baseline assessment of the line pipe that includes each required plan element;

(3) modifications to the baseline plan and reasons for the modification;

(4) use of and support for an alternative practice;

(5) a framework addressing each required element of the integrity management program, updates and changes to the initial framework and eventual program;

(6) a process for identifying a new high consequence area and incorporating it into the baseline plan, particularly, a process for identifying population changes around a pipeline segment;

(7) an explanation of methods selected to assess the integrity of line pipe;

(8) a process for review of integrity assessment results and data analysis by a person qualified to evaluate the results and data;

(9) the process and risk factors for determining the baseline assessment interval;

(10) results of the baseline integrity assessment;

(11) the process used for continual evaluation, and risk factors used for determining the frequency of evaluation;

(12) process for integrating and analyzing information about the integrity of a pipeline, information and data used for the information analysis;

(13) results of the information analyses and periodic evaluations;

(14) the process and risk factors for establishing continual re-assessment intervals;

(15) justification to support any variance from the required re-assessment intervals;

(16) integrity assessment results and anomalies found, process for evaluating and remediating anomalies, criteria for remedial actions and actions taken to evaluate and remediate the anomalies;

(17) other remedial actions planned or taken;

(18) schedule for evaluation and remediation of anomalies, justification to support deviation from required remediation times;

(19) risk analysis used to identify additional preventive or mitigative measures, records of preventive and mitigative actions planned or taken;

(20) criteria for determining EFRD installation;

(21) criteria for evaluating and modifying leak detection capability;

(22) methods used to measure the program's effectiveness.

VII. Conditions that may impair a pipeline's integrity.

Section 195.452(h) requires an operator to evaluate and remediate all pipeline integrity issues raised by the integrity assessment or information analysis. An operator must develop a schedule that prioritizes conditions discovered on the pipeline for evaluation and remediation. The following are some examples of conditions that an operator should schedule for evaluation and remediation.

A. Any change since the previous assessment.

B. Mechanical damage that is located on the top side of the pipe.

C. An anomaly abrupt in nature.

D. An anomaly longitudinal in orientation.

E. An anomaly over a large area.

F. An anomaly located in or near a casing, a crossing of another pipeline, or an area with suspect cathodic protection.

[Amdt. 195–70, 65 FR 75409, Dec. 1, 2000, as amended by Amdt. 195–74, 67 FR 1661, Jan. 14, 2002; Amdt. 195–94, 75 FR 48608, Aug. 11, 2010]

PARTS 196–197 [RESERVED]

PART 198—REGULATIONS FOR GRANTS TO AID STATE PIPELINE SAFETY PROGRAMS

Subpart A—General

Sec.
198.1 Scope.
198.3 Definitions.

Subpart B—Grant Allocation

198.11 Grant authority.
198.13 Grant allocation formula.

Subpart C—Adoption of One-Call Damage Prevention Program

198.31 Scope.
198.33 [Reserved]
198.35 Grants conditioned on adoption of one-call damage prevention program.
198.37 State one-call damage prevention program.
198.39 Qualifications for operation of one-call notification system.

AUTHORITY: 49 U.S.C. 60105, 60106, 60114; and 49 CFR 1.53.

SOURCE: 55 FR 38691, Sept. 20, 1990, unless otherwise noted.

Subpart A—General

§ 198.1 Scope.

This part prescribes regulations governing grants-in-aid for State pipeline safety compliance programs.

§ 198.3 Definitions.

As used in this part:

Administrator means the Administrator, Pipeline and Hazardous Materials Safety Administration or his or her delegate.

Adopt means establish under State law by statute, regulation, license, certification, order, or any combination of these legal means.

Excavation activity means an excavation activity defined in § 192.614(a) of this chapter, other than a specific activity the State determines would not be expected to cause physical damage to underground facilities.

Excavator means any person intending to engage in an excavation activity.

One-call notification system means a communication system that qualifies under this part and the one-call damage prevention program of the State concerned in which an operational center receives notices from excavators of intended excavation activities and transmits the notices to operators of underground pipeline facilities and other underground facilities that participate in the system.

Person means any individual, firm, joint venture, partnership, corporation, association, state, municipality, cooperative association, or joint stock association, and including any trustee, receiver, assignee, or personal representative thereof.

Underground pipeline facilities means buried pipeline facilities used in the transportation of gas or hazardous liquid subject to the pipeline safety laws (49 U.S.C. 60101 *et seq.*).

Secretary means the Secretary of Transportation or any person to whom the Secretary of Transportation has delegated authority in the matter concerned.

Seeking to adopt means actively and effectively proceeding toward adoption.

State means each of the several States, the District of Columbia, and the Commonwealth of Puerto Rico.

[55 FR 38691, Sept. 20, 1990, as amended by Amdt. 198–2, 61 FR 18518, Apr. 26, 1996; 68 FR 11750, Mar. 12, 2003; 70 FR 11140, Mar. 8, 2005]

Subpart B—Grant Allocation

SOURCE: Amdt. 198–1, 58 FR 10988, Feb. 23, 1993, unless otherwise noted.

§ 198.11 Grant authority.

The pipeline safety laws (49 U.S.C. 60101 *et seq.*) authorize the Administrator to pay out funds appropriated or otherwise make available up to 80 percent of the cost of the personnel, equipment, and activities reasonably required for each state agency to carry out a safety program for intrastate pipeline facilities under a certification or agreement with the Administrator or to act as an agent of the Administrator with respect to interstate pipeline facilities.

[Amdt. 198–5, 74 FR 62506, Nov. 30, 2009]

§ 198.13 Grant allocation formula.

(a) Beginning in calendar year 1993, the Administrator places increasing emphasis on program performance in allocating state agency funds under § 198.11. The maximum percent of each state agency allocation that is based on performance follows: 1993—75 percent; 1994 and subsequent years—100 percent.

(b) A state's annual grant allocation is based on maximum of 100 performance points derived as follows:

(1) Fifty points based on information provided in the state's annual certification/agreement attachments which document its activities for the past year; and

(2) Fifty points based on the annual state program evaluation.

(c) The Administrator assigns weights to various performance factors reflecting program compliance, safety priorities, and national concerns identified by the Administrator and communicated to each State agency. At a minimum, the Administrator considers the following performance factors in allocating funds:

(1) Adequacy of state operating practices;

(2) Quality of state inspections, investigations, and enforcement/compliance actions;

(3) Adequacy of state recordkeeping;

(4) Extent of state safety regulatory jurisdiction over pipeline facilities;

(5) Qualifications of state inspectors;

(6) Number of state inspection person-days;

(7) State adoption of applicable federal pipeline safety standards; and

(8) Any other factor the Administrator deems necessary to measure performance.

(d) Notwithstanding these performance factors, the Administrator may, in 1993 and subsequent years, continue funding any state at the 1991 level, provided its request is at the 1991 level or higher and appropriated funds are at the 1991 level or higher.

(e) The Administrator notifies each state agency in writing of the specific performance factors to be used and the weights to be assigned to each factor at least 9 months prior to allocating funds. Prior to notification, PHMSA seeks state agency comments on any proposed changes to the allocation formula.

(f) Grants are limited to the appropriated funds available. If total state agency requests for grants exceed the funds available, the Administrator prorates each state agency's allocation.

[Amdt. 198–1, 58 FR 10988, Feb. 23, 1993, as amended at 70 FR 11140, Mar. 8, 2005]

Subpart C—Adoption of One-Call Damage Prevention Program

§ 198.31 Scope.

This subpart implements parts of the pipeline safety laws (49 U.S.C. 60101 *et seq.*), which direct the Secretary to require each State to adopt a one-call damage prevention program as a condition to receiving a full grant-in-aid for its pipeline safety compliance program.

[Amdt. 198–2, 61 FR 18518, Apr. 26, 1996]

§ 198.33 [Reserved]

§ 198.35 Grants conditioned on adoption of one-call damage prevention program.

In allocating grants to State agencies under the pipeline safety laws, (49 U.S.C. 60101 *et seq.*), the Secretary considers whether a State has adopted or is seeking to adopt a one-call damage prevention program in accordance with § 198.37. If a State has not adopted or is not seeking to adopt such program, the State agency may not receive the full reimbursement to which it would otherwise be entitled.

[Amdt. 198–2, 61 FR 38403, July 24, 1996]

§ 198.37 State one-call damage prevention program.

A State must adopt a one-call damage prevention program that requires each of the following at a minimum:

(a) Each area of the State that contains underground pipeline facilities must be covered by a one-call notification system.

(b) Each one-call notification system must be operated in accordance with § 198.39.

(c) Excavators must be required to notify the operational center of the one-call notification system that covers the area of each intended excavation activity and provide the following information:

(1) Name of the person notifying the system.

(2) Name, address and telephone number of the excavator.

(3) Specific location, starting date, and description of the intended excavation activity.

However, an excavator must be allowed to begin an excavation activity in an emergency but, in doing so, required to notify the operational center at the earliest practicable moment.

(d) The State must determine whether telephonic and other communications to the operational center of a one-call notification system under paragraph (c) of this section are to be toll free or not.

(e) Except with respect to interstate transmission facilities as defined in the pipeline safety laws (49 U.S.C. 60101 *et seq.*), operators of underground pipeline facilities must be required to participate in the one-call notification systems that cover the areas of the State in which those pipeline facilities are located.

(f) Operators of underground pipeline facilities participating in the one-call notification systems must be required to respond in the manner prescribed by § 192.614 (b)(4) through (b)(6) of this chapter to notices of intended excavation activity received from the operational center of a one-call notification system.

(g) Persons who operate one-call notification systems or operators of underground pipeline facilities participating or required to participate in the one-call notification systems must be required to notify the public and known excavators in the manner prescribed by § 192.614 (b)(1) and (b)(2) of this chapter of the availability and use of one-call notification systems to locate underground pipeline facilities. However, this paragraph does not apply to persons (including operator's master meters) whose primary activity does not include the production, transportation or marketing of gas or hazardous liquids.

(h) Operators of underground pipeline facilities (other than operators of interstate transmission facilities as defined in the pipeline safety laws (49 U.S.C. 60101 *et seq.*), and interstate pipelines as defined in § 195.2 of this chapter), excavators and persons who operate one-call notification systems who violate the applicable requirements of this subpart must be subject to civil penalties and injunctive relief that are substantially the same as are provided under the pipeline safety laws (49 U.S.C. 60101 *et seq.*).

[55 FR 38691, Sept. 20, 1990, as amended by Amdt. 198–2, 61 FR 18518, Apr. 26, 1996]

§ 198.39 Qualifications for operation of one-call notification system.

A one-call notification system qualifies to operate under this subpart if it complies with the following:

(a) It is operated by one or more of the following:

(1) A person who operates underground pipeline facilities or other underground facilities.

(2) A private contractor.

(3) A State or local government agency.

(4) A person who is otherwise eligible under State law to operate a one-call notification system.

(b) It receives and records information from excavators about intended excavation activities.

(c) It promptly transmits to the appropriate operators of underground pipeline facilities the information received from excavators about intended excavation activities.

(d) It maintains a record of each notice of intent to engage in an excavation activity for the minimum time set by the State or, in the absence of such time, for the time specified in the applicable State statute of limitations on tort actions.

(e) It tells persons giving notice of an intent to engage in an excavation activity the names of participating operators of underground pipeline facilities to whom the notice will be transmitted.

PART 199—DRUG AND ALCOHOL TESTING

Subpart A—General

Sec.
199.1 Scope.
199.2 Applicability.
199.3 Definitions.
199.5 DOT procedures.
199.7 Stand-down waivers.
199.9 Preemption of State and local laws.

Subpart B—Drug Testing

199.100 Purpose.
199.101 Anti-drug plan.
199.103 Use of persons who fail or refuse a drug test.
199.105 Drug tests required.
199.107 Drug testing laboratory.
199.109 Review of drug testing results.
199.111 Retention of samples and additional testing.
199.113 Employee assistance program.
199.115 Contractor employees.
199.117 Recordkeeping.
199.119 Reporting of anti-drug testing results.

Subpart C—Alcohol Misuse Prevention Program

199.200 Purpose.
199.201 [Reserved]
199.202 Alcohol misuse plan.
199.203–199.205 [Reserved]
199.209 Other requirements imposed by operators.
199.211 Requirement for notice.
199.213 [Reserved]
199.215 Alcohol concentration.
199.217 On-duty use.
199.219 Pre-duty use.
199.221 Use following an accident.
199.223 Refusal to submit to a required alcohol test.
199.225 Alcohol tests required.
199.227 Retention of records.
199.229 Reporting of alcohol testing results.
199.231 Access to facilities and records.
199.233 Removal from covered function.
199.235 Required evaluation and testing.
199.237 Other alcohol-related conduct.
199.239 Operator obligation to promulgate a policy on the misuse of alcohol.
199.241 Training for supervisors.
199.243 Referral, evaluation, and treatment.
199.245 Contractor employees.

AUTHORITY: 49 U.S.C. 5103, 60102, 60104, 60108, 60117, and 60118; 49 CFR 1.53.

SOURCE: 53 FR 47096, Nov. 21, 1988, unless otherwise noted.

Subpart A—General

§ 199.1 Scope.

This part requires operators of pipeline facilities subject to part 192, 193, or 195 of this chapter to test covered employees for the presence of prohibited drugs and alcohol.

[Amdt. 199–19, 66 FR 47117, Sept. 11, 2001]

§ 199.2 Applicability.

(a) This part applies to pipeline operators only with respect to employees located within the territory of the United States, including those employees located within the limits of the ''Outer Continental Shelf '' as that term is defined in the Outer Continental Shelf Lands Act (43 U.S.C. 1331).

(b) This part does not apply to any person for whom compliance with this part would violate the domestic laws or policies of another country.

(c) This part does not apply to covered functions performed on—

(1) Master meter systems, as defined in § 191.3 of this chapter; or

(2) Pipeline systems that transport only petroleum gas or petroleum gas/air mixtures.

[Amdt. 199–19, 66 FR 47117, Sept. 11, 2001]

§ 199.3 Definitions.

As used in this part—

Accident means an incident reportable under part 191 of this chapter involving gas pipeline facilities or LNG facilities, or an accident reportable under part 195 of this chapter involving hazardous liquid pipeline facilities.

Administrator means the Administrator, Pipeline and Hazardous Materials Safety Administration or his or her delegate.

Covered employee, employee, or individual to be tested means a person who performs a covered function, including persons employed by operators, contractors engaged by operators, and persons employed by such contractors.

Covered function means an operations, maintenance, or emergency-response function regulated by part 192, 193, or 195 of this chapter that is performed on a pipeline or on an LNG facility.

DOT Procedures means the Procedures for Transportation Workplace Drug and Alcohol Testing Programs published by the Office of the Secretary of Transportation in part 40 of this title.

Fail a drug test means that the confirmation test result shows positive evidence of the presence under DOT Procedures of a prohibited drug in an employee's system.

Operator means a person who owns or operates pipeline facilities subject to part 192, 193, or 195 of this chapter.

Pass a drug test means that initial testing or confirmation testing under DOT Procedures does not show evidence of the presence of a prohibited drug in a person's system.

Performs a covered function includes actually performing, ready to perform, or immediately available to perform a covered function.

Positive rate for random drug testing means the number of verified positive results for random drug tests conducted under this part plus the number of refusals of random drug tests required by this part, divided by the total number of random drug tests results (*i.e.*, positives, negatives, and refusals) under this part.

Prohibited drug means any of the following substances specified in Schedule I or Schedule II of the Controlled Substances Act (21 U.S.C. 812): marijuana, cocaine, opiates, amphetamines, and phencyclidine (PCP).

Refuse to submit, refuse, or refuse to take means behavior consistent with DOT Procedures concerning refusal to take a drug test or refusal to take an alcohol test.

State agency means an agency of any of the several states, the District of Columbia, or Puerto Rico that participates under the pipeline safety laws (49 U.S.C. 60101 *et seq.*)

[53 FR 47096, Nov. 21, 1988, as amended by Amdt. 199–2, 54 FR 51850, Dec. 18, 1989; 59 FR 62227, Dec. 2, 1994; Amdt. 199–13, 61 FR 18518, Apr. 26, 1996; Amdt. 199–15, 63 FR 13000, Mar. 17, 1998; Amdt. 199–19, 66 FR 47117, Sept. 11, 2001; 68 FR 11750, Mar. 12, 2003; 68 FR 75465, Dec. 31, 2003; 70 FR 11140, Mar. 8, 2005]

§ 199.5 DOT procedures.

The anti-drug and alcohol programs required by this part must be conducted according to the requirements of this part and DOT Procedures. Terms and concepts used in this part have the same meaning as in DOT Procedures. Violations of DOT Procedures with respect to anti-drug and alcohol programs required by this part are violations of this part.

[Amdt. 199–19, 66 FR 47118, Sept. 11, 2001]

§ 199.7 Stand-down waivers.

(a) Each operator who seeks a waiver under § 40.21 of this title from the stand-down restriction must submit an application for waiver in duplicate to the Associate Administrator for Pipeline Safety, Pipeline and Hazardous Materials Safety Administration, U.S. Department of Transportation, 1200 New Jersey Avenue, SE, Washington, DC 20590–0001.

(b) Each application must—

(1) Identify § 40.21 of this title as the rule from which the waiver is sought;

(2) Explain why the waiver is requested and describe the employees to be covered by the waiver;

(3) Contain the information required by § 40.21 of this title and any other information or arguments available to support the waiver requested; and

(4) Unless good cause is shown in the application, be submitted at least 60 days before the proposed effective date of the waiver.

(c) No public hearing or other proceeding is held directly on an application before its disposition under this section. If the Associate Administrator determines that the application contains adequate justification, he or she grants the waiver. If the Associate Administrator determines that the application does not justify granting the waiver, he or she denies the application. The Associate Administrator notifies each applicant of the decision to grant or deny an application.

[Amdt. 199–19, 66 FR 47118, Sept. 11, 2001, as amended at 70 FR 11140, Mar. 8, 2005; 74 FR 2894, Jan. 16, 2009]

§ 199.9 Preemption of State and local laws.

(a) Except as provided in paragraph (b) of this section, this part preempts any State or local law, rule, regulation, or order to the extent that:

(1) Compliance with both the State or local requirement and this part is not possible;

(2) Compliance with the State or local requirement is an obstacle to the accomplishment and execution of any requirement in this part; or

(3) The State or local requirement is a pipeline safety standard applicable to interstate pipeline facilities.

(b) This part shall not be construed to preempt provisions of State criminal law that impose sanctions for reckless conduct leading to actual loss of life, injury, or damage to property, whether the provisions apply specifically to transportation employees or employers or to the general public.

[Amdt. 199–9, 59 FR 7430, Feb. 15, 1994. Redesignated and amended by Amdt. 199–19, 66 FR 47119, Sept. 11, 2001]

Subpart B—Drug Testing

§ 199.100 Purpose.

The purpose of this subpart is to establish programs designed to help prevent accidents and injuries resulting from the use of prohibited drugs by employees who perform covered functions for operators of certain pipeline facilities subject to part 192, 193, or 195 of this chapter.

[Amdt. 199–19, 66 FR 47118, Sept. 11, 2001]

§ 199.101 Anti-drug plan.

(a) Each operator shall maintain and follow a written anti-drug plan that conforms to the requirements of this part and the DOT Procedures. The plan must contain—

(1) Methods and procedures for compliance with all the requirements of this part, including the employee assistance program;

(2) The name and address of each laboratory that analyzes the specimens collected for drug testing;

(3) The name and address of the operator's Medical Review Officer, and Substance Abuse Professional; and

(4) Procedures for notifying employees of the coverage and provisions of the plan.

(b) The Associate Administrator or the State Agency that has submitted a current certification under the pipeline safety laws (49 U.S.C. 60101 *et seq.*) with respect to the pipeline facility governed by an operator's plans and procedures may, after notice and opportunity for hearing as provided in 49 CFR 190.206 or the relevant State procedures, require the operator to amend its plans and procedures as necessary to provide a reasonable level of safety.

[53 FR 47096, Nov. 21, 1988, as amended by Amdt. 199–2, 54 FR 51850, Dec. 18, 1989; Amdt. 199–4, 56 FR 31091, July 9, 1991; 56 FR 41077, Aug. 19, 1991; Amdt. 199–13, 61 FR 18518, Apr. 26, 1996; Amdt. 199–15, 63 FR 36863, July 8, 1998. Redesignated by Amdt. 199–19, 66 FR 47118, Sept. 11, 2001; Amdt. 199–25, 78 FR 58915, Sept. 25, 2013]

§ 199.103 Use of persons who fail or refuse a drug test.

(a) An operator may not knowingly use as an employee any person who—

(1) Fails a drug test required by this part and the medical review officer makes a determination under DOT Procedures; or

(2) Refuses to take a drug test required by this part.

(b) Paragraph (a)(1) of this section does not apply to a person who has—

(1) Passed a drug test under DOT Procedures;

(2) Been considered by the medical review officer in accordance with DOT Procedures and been determined by a substance abuse professional to have

successfully completed required education or treatment; and

(3) Not failed a drug test required by this part after returning to duty.

[53 FR 47096, Nov. 21, 1988, as amended by Amdt. 199–2, 54 FR 51850, Dec. 18, 1989. Redesignated and amended by Amdt. 199–19, 66 FR 47118, Sept. 11, 2001]

§ 199.105 Drug tests required.

Each operator shall conduct the following drug tests for the presence of a prohibited drug:

(a) *Pre-employment testing*. No operator may hire or contract for the use of any person as an employee unless that person passes a drug test or is covered by an anti-drug program that conforms to the requirements of this part.

(b) *Post-accident testing*. As soon as possible but no later than 32 hours after an accident, an operator shall drug test each employee whose performance either contributed to the accident or cannot be completely discounted as a contributing factor to the accident. An operator may decide not to test under this paragraph but such a decision must be based on the best information available immediately after the accident that the employee's performance could not have contributed to the accident or that, because of the time between that performance and the accident, it is not likely that a drug test would reveal whether the performance was affected by drug use.

(c) *Random testing*. (1) Except as provided in paragraphs (c)(2) through (4) of this section, the minimum annual percentage rate for random drug testing shall be 50 percent of covered employees.

(2) The Administrator's decision to increase or decrease the minimum annual percentage rate for random drug testing is based on the reported positive rate for the entire industry. All information used for this determination is drawn from the drug MIS reports required by this subpart. In order to ensure reliability of the data, the Administrator considers the quality and completeness of the reported data, may obtain additional information or reports from operators, and may make appropriate modifications in calculating the industry positive rate. Each year, the Administrator will publish in the FEDERAL REGISTER the minimum annual percentage rate for random drug testing of covered employees. The new minimum annual percentage rate for random drug testing will be applicable starting January 1 of the calendar year following publication.

(3) When the minimum annual percentage rate for random drug testing is 50 percent, the Administrator may lower this rate to 25 percent of all covered employees if the Administrator determines that the data received under the reporting requirements of § 199.119 for two consecutive calendar years indicate that the reported positive rate is less than 1.0 percent.

(4) When the minimum annual percentage rate for random drug testing is 25 percent, and the data received under the reporting requirements of § 199.119 for any calendar year indicate that the reported positive rate is equal to or greater than 1.0 percent, the Administrator will increase the minimum annual percentage rate for random drug testing to 50 percent of all covered employees.

(5) The selection of employees for random drug testing shall be made by a scientifically valid method, such as a random number table or a computer-based random number generator that is matched with employees' Social Security numbers, payroll identification numbers, or other comparable identifying numbers. Under the selection process used, each covered employee shall have an equal chance of being tested each time selections are made.

(6) The operator shall randomly select a sufficient number of covered employees for testing during each calendar year to equal an annual rate not less than the minimum annual percentage rate for random drug testing determined by the Administrator. If the operator conducts random drug testing through a consortium, the number of employees to be tested may be calculated for each individual operator or may be based on the total number of covered employees covered by the consortium who are subject to random drug testing at the same minimum annual percentage rate under this subpart or any DOT drug testing rule.

(7) Each operator shall ensure that random drug tests conducted under

this subpart are unannounced and that the dates for administering random tests are spread reasonably throughout the calendar year.

(8) If a given covered employee is subject to random drug testing under the drug testing rules of more than one DOT agency for the same operator, the employee shall be subject to random drug testing at the percentage rate established for the calendar year by the DOT agency regulating more than 50 percent of the employee's function.

(9) If an operator is required to conduct random drug testing under the drug testing rules of more than one DOT agency, the operator may—

(i) Establish separate pools for random selection, with each pool containing the covered employees who are subject to testing at the same required rate; or

(ii) Randomly select such employees for testing at the highest percentage rate established for the calendar year by any DOT agency to which the operator is subject.

(d) *Testing based on reasonable cause.* Each operator shall drug test each employee when there is reasonable cause to believe the employee is using a prohibited drug. The decision to test must be based on a reasonable and articulable belief that the employee is using a prohibited drug on the basis of specific, contemporaneous physical, behavioral, or performance indicators of probable drug use. At least two of the employee's supervisors, one of whom is trained in detection of the possible symptoms of drug use, shall substantiate and concur in the decision to test an employee. The concurrence between the two supervisors may be by telephone. However, in the case of operators with 50 or fewer employees subject to testing under this part, only one supervisor of the employee trained in detecting possible drug use symptoms shall substantiate the decision to test.

(e) *Return-to-duty testing.* A covered employee who refuses to take or has a positive drug test may not return to duty in the covered function until the covered employee has complied with applicable provisions of DOT Procedures concerning substance abuse professionals and the return-to-duty process.

(f) *Follow-up testing.* A covered employee who refuses to take or has a positive drug test shall be subject to unannounced follow-up drug tests administered by the operator following the covered employee's return to duty. The number and frequency of such follow-up testing shall be determined by a substance abuse professional, but shall consist of at least six tests in the first 12 months following the covered employee's return to duty. In addition, follow-up testing may include testing for alcohol as directed by the substance abuse professional, to be performed in accordance with 49 CFR part 40. Follow-up testing shall not exceed 60 months from the date of the covered employee's return to duty. The substance abuse professional may terminate the requirement for follow-up testing at any time after the first six tests have been administered, if the substance abuse professional determines that such testing is no longer necessary.

[53 FR 47096, Nov. 21, 1988, as amended by Amdt. 199–2, 54 FR 51850, Dec. 18, 1989; 59 FR 62227, Dec. 2, 1994; Amdt. 199–15, 63 FR 13000, Mar. 17, 1998; Amdt. 199–15, 63 FR 36863, July 8, 1998. Redesignated and amended by Amdt. 199–19, 66 FR 47118, Sept. 11, 2001]

§ 199.107 Drug testing laboratory.

(a) Each operator shall use for the drug testing required by this part only drug testing laboratories certified by the Department of Health and Human Services under the DOT Procedures.

(b) The drug testing laboratory must permit—

(1) Inspections by the operator before the laboratory is awarded a testing contract; and

(2) Unannounced inspections, including examination of records, at any time, by the operator, the Administrator, and if the operator is subject to state agency jurisdiction, a representative of that state agency.

[53 FR 47096, Nov. 21, 1988. Redesignated by Amdt. 199–19, 66 FR 47118, Sept. 11, 2001]

§ 199.109 Review of drug testing results.

(a) *MRO appointment.* Each operator shall designate or appoint a medical review officer (MRO). If an operator does not have a qualified individual on staff

to serve as MRO, the operator may contract for the provision of MRO services as part of its anti-drug program.

(b) *MRO qualifications.* Each MRO must be a licensed physician who has the qualifications required by DOT Procedures.

(c) *MRO duties.* The MRO must perform functions for the operator as required by DOT Procedures.

(d) *MRO reports.* The MRO must report all drug test results to the operator in accordance with DOT Procedures.

(e) Evaluation and rehabilitation may be provided by the operator, by a substance abuse professional under contract with the operator, or by a substance abuse professional not affiliated with the operator. The choice of substance abuse professional and assignment of costs shall be made in accordance with the operator/employee agreements and operator/employee policies.

(f) The operator shall ensure that a substance abuse professional, who determines that a covered employee requires assistance in resolving problems with drug abuse, does not refer the covered employee to the substance abuse professional's private practice or to a person or organization from which the substance abuse professional receives remuneration or in which the substance abuse professional has a financial interest. This paragraph does not prohibit a substance abuse professional from referring a covered employee for assistance provided through:

(1) A public agency, such as a State, county, or municipality;

(2) The operator or a person under contract to provide treatment for drug problems on behalf of the operator;

(3) The sole source of therapeutically appropriate treatment under the employee's health insurance program; or

(4) The sole source of therapeutically appropriate treatment reasonably accessible to the employee.

[53 FR 47096, Nov. 21, 1988, as amended by Amdt. 199–2, 54 FR 51850, Dec. 18, 1989; Amdt. 199–15, 63 FR 13000, Mar. 17, 1998; Amdt. 199–15, 63 FR 36863, July 8, 1998. Redesignated and amended by Amdt. 199–19, 66 FR 47118, Sept. 11, 2001]

§ 199.111 Retention of samples and additional testing.

(a) Samples that yield positive results on confirmation must be retained by the laboratory in properly secured, long-term, frozen storage for at least 365 days as required by the DOT Procedures. Within this 365-day period, the employee or the employee's representative, the operator, the Administrator, or, if the operator is subject to the jurisdiction of a state agency, the state agency may request that the laboratory retain the sample for an additional period. If, within the 365-day period, the laboratory has not received a proper written request to retain the sample for a further reasonable period specified in the request, the sample may be discarded following the end of the 365-day period.

(b) If the medical review officer (MRO) determines there is no legitimate medical explanation for a confirmed positive test result other than the unauthorized use of a prohibited drug, and if timely additional testing is requested by the employee according to DOT Procedures, the split specimen must be tested. The employee may specify testing by the original laboratory or by a second laboratory that is certified by the Department of Health and Human Services. The operator may require the employee to pay in advance the cost of shipment (if any) and reanalysis of the sample, but the employee must be reimbursed for such expense if the additional test is negative.

(c) If the employee specifies testing by a second laboratory, the original laboratory must follow approved chain-of-custody procedures in transferring a portion of the sample.

(d) Since some analytes may deteriorate during storage, detected levels of the drug below the detection limits established in the DOT Procedures, but equal to or greater than the established sensitivity of the assay, must, as technically appropriate, be reported and considered corroborative of the original positive results.

[53 FR 47096, Nov. 21, 1988; 55 FR 797, Jan. 9, 1990, as amended by Amdt. 199–17, 63 FR 7723, Feb. 17, 1998. Redesignated and amended by Amdt. 199–19, 66 FR 47118, Sept. 11, 2001]

§ 199.113 Employee assistance program.

(a) Each operator shall provide an employee assistance program (EAP) for its employees and supervisory personnel who will determine whether an employee must be drug tested based on reasonable cause. The operator may establish the EAP as a part of its internal personnel services or the operator may contract with an entity that provides EAP services. Each EAP must include education and training on drug use. At the discretion of the operator, the EAP may include an opportunity for employee rehabilitation.

(b) Education under each EAP must include at least the following elements: display and distribution of informational material; display and distribution of a community service hot-line telephone number for employee assistance; and display and distribution of the employer's policy regarding the use of prohibited drugs.

(c) Training under each EAP for supervisory personnel who will determine whether an employee must be drug tested based on reasonable cause must include one 60-minute period of training on the specific, contemporaneous physical, behavioral, and performance indicators of probable drug use.

[53 FR 47096, Nov. 21, 1988. Redesignated by Amdt. 199–19, 66 FR 47118, Sept. 11, 2001]

§ 199.115 Contractor employees.

With respect to those employees who are contractors or employed by a contractor, an operator may provide by contract that the drug testing, education, and training required by this part be carried out by the contractor provided:

(a) The operator remains responsible for ensuring that the requirements of this part are complied with; and

(b) The contractor allows access to property and records by the operator, the Administrator, and if the operator is subject to the jurisdiction of a state agency, a representative of the state agency for the purpose of monitoring the operator's compliance with the requirements of this part.

[53 FR 47096, Nov. 21, 1988. Redesignated by Amdt. 199–19, 66 FR 47118, Sept. 11, 2001]

§ 199.117 Recordkeeping.

(a) Each operator shall keep the following records for the periods specified and permit access to the records as provided by paragraph (b) of this section:

(1) Records that demonstrate the collection process conforms to this part must be kept for at least 3 years.

(2) Records of employee drug test that indicate a verified positive result, records that demonstrate compliance with the recommendations of a substance abuse professional, and MIS annual report data shall be maintained for a minimum of five years.

(3) Records of employee drug test results that show employees passed a drug test must be kept for at least 1 year.

(4) Records confirming that supervisors and employees have been trained as required by this part must be kept for at least 3 years.

(b) Information regarding an individual's drug testing results or rehabilitation must be released upon the written consent of the individual and as provided by DOT Procedures. Statistical data related to drug testing and rehabilitation that is not name-specific and training records must be made available to the Administrator or the representative of a state agency upon request.

[53 FR 47096, Nov. 21, 1988, as amended at 58 FR 68260, Dec. 23, 1993. Redesignated and amended by Amdt. 199–19, 66 FR 47119, Sept. 11, 2001; 68 FR 75465, Dec. 31, 2003]

§ 199.119 Reporting of anti-drug testing results.

(a) Each large operator (having more than 50 covered employees) shall submit an annual MIS report to PHMSA of its anti-drug testing using the Management Information System (MIS) form and instructions as required by 49 CFR part 40 (at § 40.25 and appendix H to Part 40), not later than March 15 of each year for the prior calendar year (January 1 through December 31). The Administrator shall require by written notice that small operators (50 or fewer covered employees) not otherwise required to submit annual MIS reports to prepare and submit such reports to PHMSA.

(b) Each report required under this section shall be submitted to the Office of Pipeline Safety, Pipeline and Hazardous Materials Safety Administration, U.S. Department of Transportation, PHP–60, 1200 New Jersey Avenue, SE., Washington, DC 20590.

(c) To calculate the total number of covered employees eligible for random testing throughout the year, as an operator, you must add the total number of covered employees eligible for testing during each random testing period for the year and divide that total by the number of random testing periods. Covered employees, and only covered employees, are to be in an employer's random testing pool, and all covered employees must be in the random pool. If you are an employer conducting random testing more often than once per month (*e.g.*, you select daily, weekly, bi-weekly), you do not need to compute this total number of covered employees rate more than on a once per month basis.

(d) As an employer, you may use a service agent (*e.g.*, C/TPA) to perform random selections for you; and your covered employees may be part of a larger random testing pool of covered employees. However, you must ensure that the service agent you use is testing at the appropriate percentage established for your industry and that only covered employees are in the random testing pool.

(e) Each operator that has a covered employee who performs multi-DOT agency functions (*e.g.*, an employee performs pipeline maintenance duties and drives a commercial motor vehicle), count the employee only on the MIS report for the DOT agency under which he or she is randomly tested. Normally, this will be the DOT agency under which the employee performs more than 50% of his or her duties. Operators may have to explain the testing data for these employees in the event of a DOT agency inspection or audit.

(f) A service agent (*e.g.*, Consortia/Third Party Administrator as defined in 49 CFR part 40) may prepare the MIS report on behalf of an operator. However, each report shall be certified by the operator's anti-drug manager or designated representative for accuracy and completeness.

[68 FR 75465, Dec. 31, 2003, as amended by Amdt. 199–20, 69 FR 32898, June 14, 2004; 70 FR 11140, Mar. 8, 2005; 73 FR 16571, Mar. 28, 2008]

Subpart C—Alcohol Misuse Prevention Program

SOURCE: Amdt. 199–9, 59 FR 7430, Feb. 15, 1994, unless otherwise noted. Redesignated by Amdt. 199–19, 66 FR 47118, Sept. 11, 2001.

§ 199.200 Purpose.

The purpose of this subpart is to establish programs designed to help prevent accidents and injuries resulting from the misuse of alcohol by employees who perform covered functions for operators of certain pipeline facilities subject to parts 192, 193, or 195 of this chapter.

§ 199.201 [Reserved]

§ 199.202 Alcohol misuse plan.

Each operator must maintain and follow a written alcohol misuse plan that conforms to the requirements of this part and DOT Procedures concerning alcohol testing programs. The plan shall contain methods and procedures for compliance with all the requirements of this subpart, including required testing, recordkeeping, reporting, education and training elements.

[Amdt. 199–9, 59 FR 7430, Feb. 15, 1994, as amended by Amdt. 199–19, 66 FR 47119, Sept. 11, 2001]

§§ 199.203–199.205 [Reserved]

§ 199.209 Other requirements imposed by operators.

(a) Except as expressly provided in this subpart, nothing in this subpart shall be construed to affect the authority of operators, or the rights of employees, with respect to the use or possession of alcohol, including authority and rights with respect to alcohol testing and rehabilitation.

(b) Operators may, but are not required to, conduct pre-employment alcohol testing under this subpart. Each operator that conducts pre-employment alcohol testing must—

(1) Conduct a pre-employment alcohol test before the first performance of covered functions by every covered employee (whether a new employee or someone who has transferred to a position involving the performance of covered functions);

(2) Treat all covered employees the same for the purpose of pre-employment alcohol testing (i.e., you must not test some covered employees and not others);

(3) Conduct the pre-employment tests after making a contingent offer of employment or transfer, subject to the employee passing the pre-employment alcohol test;

(4) Conduct all pre-employment alcohol tests using the alcohol testing procedures in DOT Procedures; and

(5) Not allow any covered employee to begin performing covered functions unless the result of the employee's test indicates an alcohol concentration of less than 0.04.

[Amdt. 199–9, 59 FR 7430, Feb. 15, 1994, as amended by Amdt. 199–19, 66 FR 47119, Sept. 11, 2001]

§ 199.211 Requirement for notice.

Before performing an alcohol test under this subpart, each operator shall notify a covered employee that the alcohol test is required by this subpart. No operator shall falsely represent that a test is administered under this subpart.

§ 199.213 [Reserved]

§ 199.215 Alcohol concentration.

Each operator shall prohibit a covered employee from reporting for duty or remaining on duty requiring the performance of covered functions while having an alcohol concentration of 0.04 or greater. No operator having actual knowledge that a covered employee has an alcohol concentration of 0.04 or greater shall permit the employee to perform or continue to perform covered functions.

§ 199.217 On-duty use.

Each operator shall prohibit a covered employee from using alcohol while performing covered functions. No operator having actual knowledge that a covered employee is using alcohol while performing covered functions shall permit the employee to perform or continue to perform covered functions.

§ 199.219 Pre-duty use.

Each operator shall prohibit a covered employee from using alcohol within four hours prior to performing covered functions, or, if an employee is called to duty to respond to an emergency, within the time period after the employee has been notified to report for duty. No operator having actual knowledge that a covered employee has used alcohol within four hours prior to performing covered functions or within the time period after the employee has been notified to report for duty shall permit that covered employee to perform or continue to perform covered functions.

§ 199.221 Use following an accident.

Each operator shall prohibit a covered employee who has actual knowledge of an accident in which his or her performance of covered functions has not been discounted by the operator as a contributing factor to the accident from using alcohol for eight hours following the accident, unless he or she has been given a post-accident test under § 199.225(a), or the operator has determined that the employee's performance could not have contributed to the accident.

§ 199.223 Refusal to submit to a required alcohol test.

Each operator shall require a covered employee to submit to a post-accident alcohol test required under § 199.225(a), a reasonable suspicion alcohol test required under § 199.225(b), or a follow-up alcohol test required under § 199.225(d). No operator shall permit an employee who refuses to submit to such a test to perform or continue to perform covered functions.

§ 199.225 Alcohol tests required.

Each operator shall conduct the following types of alcohol tests for the presence of alcohol:

(a) *Post-accident.* (1) As soon as practicable following an accident, each operator shall test each surviving covered employee for alcohol if that employee's

performance of a covered function either contributed to the accident or cannot be completely discounted as a contributing factor to the accident. The decision not to administer a test under this section shall be based on the operator's determination, using the best available information at the time of the determination, that the covered employee's performance could not have contributed to the accident.

(2)(i) If a test required by this section is not administered within 2 hours following the accident, the operator shall prepare and maintain on file a record stating the reasons the test was not promptly administered. If a test required by paragraph (a) is not administered within 8 hours following the accident, the operator shall cease attempts to administer an alcohol test and shall state in the record the reasons for not administering the test.

(ii) [Reserved]

(3) A covered employee who is subject to post-accident testing who fails to remain readily available for such testing, including notifying the operator or operator representative of his/her location if he/she leaves the scene of the accident prior to submission to such test, may be deemed by the operator to have refused to submit to testing. Nothing in this section shall be construed to require the delay of necessary medical attention for injured people following an accident or to prohibit a covered employee from leaving the scene of an accident for the period necessary to obtain assistance in responding to the accident or to obtain necessary emergency medical care.

(b) *Reasonable suspicion testing.* (1) Each operator shall require a covered employee to submit to an alcohol test when the operator has reasonable suspicion to believe that the employee has violated the prohibitions in this subpart.

(2) The operator's determination that reasonable suspicion exists to require the covered employee to undergo an alcohol test shall be based on specific, contemporaneous, articulable observations concerning the appearance, behavior, speech, or body odors of the employee. The required observations shall be made by a supervisor who is trained in detecting the symptoms of alcohol misuse. The supervisor who makes the determination that reasonable suspicion exists shall not conduct the breath alcohol test on that employee.

(3) Alcohol testing is authorized by this section only if the observations required by paragraph (b)(2) of this section are made during, just preceding, or just after the period of the work day that the employee is required to be in compliance with this subpart. A covered employee may be directed by the operator to undergo reasonable suspicion testing for alcohol only while the employee is performing covered functions; just before the employee is to perform covered functions; or just after the employee has ceased performing covered functions.

(4)(i) If a test required by this section is not administered within 2 hours following the determination under paragraph (b)(2) of this section, the operator shall prepare and maintain on file a record stating the reasons the test was not promptly administered. If a test required by this section is not administered within 8 hours following the determination under paragraph (b)(2) of this section, the operator shall cease attempts to administer an alcohol test and shall state in the record the reasons for not administering the test. Records shall be submitted to PHMSA upon request of the Administrator.

(ii) [Reserved]

(iii) Notwithstanding the absence of a reasonable suspicion alcohol test under this section, an operator shall not permit a covered employee to report for duty or remain on duty requiring the performance of covered functions while the employee is under the influence of or impaired by alcohol, as shown by the behavioral, speech, or performance indicators of alcohol misuse, nor shall an operator permit the covered employee to perform or continue to perform covered functions, until:

(A) An alcohol test is administered and the employee's alcohol concentration measures less than 0.02; or

(B) The start of the employee's next regularly scheduled duty period, but not less than 8 hours following the determination under paragraph (b)(2) of this section that there is reasonable suspicion to believe that the employee

has violated the prohibitions in this subpart.

(iv) Except as provided in paragraph (b)(4)(ii), no operator shall take any action under this subpart against a covered employee based solely on the employee's behavior and appearance in the absence of an alcohol test. This does not prohibit an operator with the authority independent of this subpart from taking any action otherwise consistent with law.

(c) *Return-to-duty testing*. Each operator shall ensure that before a covered employee returns to duty requiring the performance of a covered function after engaging in conduct prohibited by §§ 199.215 through 199.223, the employee shall undergo a return-to-duty alcohol test with a result indicating an alcohol concentration of less than 0.02.

(d) *Follow-up testing*. (1) Following a determination under § 199.243(b) that a covered employee is in need of assistance in resolving problems associated with alcohol misuse, each operator shall ensure that the employee is subject to unannounced follow-up alcohol testing as directed by a substance abuse professional in accordance with the provisions of § 199.243(c)(2)(ii).

(2) Follow-up testing shall be conducted when the covered employee is performing covered functions; just before the employee is to perform covered functions; or just after the employee has ceased performing such functions.

(e) *Retesting of covered employees with an alcohol concentration of 0.02 or greater but less than 0.04*. Each operator shall retest a covered employee to ensure compliance with the provisions of § 199.237, if an operator chooses to permit the employee to perform a covered function within 8 hours following the administration of an alcohol test indicating an alcohol concentration of 0.02 or greater but less than 0.04.

[Amdt. 199–9, 59 FR 7430, Feb. 15, 1994, as amended at 59 FR 62239, 62246, Dec. 2, 1994; Amdt. 199–19, 66 FR 47119, Sept. 11, 2001; 70 FR 11140, March 8, 2005]

§ 199.227 Retention of records.

(a) *General requirement*. Each operator shall maintain records of its alcohol misuse prevention program as provided in this section. The records shall be maintained in a secure location with controlled access.

(b) *Period of retention*. Each operator shall maintain the records in accordance with the following schedule:

(1) *Five years*. Records of employee alcohol test results with results indicating an alcohol concentration of 0.02 or greater, documentation of refusals to take required alcohol tests, calibration documentation, employee evaluation and referrals, and MIS annual report data shall be maintained for a minimum of five years.

(2) *Two years*. Records related to the collection process (except calibration of evidential breath testing devices), and training shall be maintained for a minimum of two years.

(3) *One year*. Records of all test results below 0.02 (as defined in 49 CFR part 40) shall be maintained for a minimum of one year.

(c) *Types of records*. The following specific records shall be maintained:

(1) Records related to the collection process:

(i) Collection log books, if used.

(ii) Calibration documentation for evidential breath testing devices.

(iii) Documentation of breath alcohol technician training.

(iv) Documents generated in connection with decisions to administer reasonable suspicion alcohol tests.

(v) Documents generated in connection with decisions on post- accident tests.

(vi) Documents verifying existence of a medical explanation of the inability of a covered employee to provide adequate breath for testing.

(2) Records related to test results:

(i) The operator's copy of the alcohol test form, including the results of the test.

(ii) Documents related to the refusal of any covered employee to submit to an alcohol test required by this subpart.

(iii) Documents presented by a covered employee to dispute the result of an alcohol test administered under this subpart.

(3) Records related to other violations of this subpart.

(4) Records related to evaluations:

(i) Records pertaining to a determination by a substance abuse professional concerning a covered employee's need for assistance.

(ii) Records concerning a covered employee's compliance with the recommendations of the substance abuse professional.

(5) Record(s) related to the operator's MIS annual testing data.

(6) Records related to education and training:

(i) Materials on alcohol misuse awareness, including a copy of the operator's policy on alcohol misuse.

(ii) Documentation of compliance with the requirements of § 199.231.

(iii) Documentation of training provided to supervisors for the purpose of qualifying the supervisors to make a determination concerning the need for alcohol testing based on reasonable suspicion.

(iv) Certification that any training conducted under this subpart complies with the requirements for such training.

§ 199.229 Reporting of alcohol testing results.

(a) Each large operator (having more than 50 covered employees) shall submit an annual MIS report to PHMSA of its alcohol testing results using the Management Information System (MIS) form and instructions as required by 49 CFR part 40 (at § 40.25 and appendix H to part 40), not later than March 15 of each year for the previous calendar year (January 1 through December 31). The Administrator may require by written notice that small operators (50 or fewer covered employees) not otherwise required to submit annual MIS reports to prepare and submit such reports to PHMSA.

(b) Each operator that has a covered employee who performs multi-DOT agency functions (*e.g.*, an employee performs pipeline maintenance duties and drives a commercial motor vehicle), count the employee only on the MIS report for the DOT agency under which he or she is tested. Normally, this will be the DOT agency under which the employee performs more than 50% of his or her duties. Operators may have to explain the testing data for these employees in the event of a DOT agency inspection or audit.

(c) Each report required under this section shall be submitted to the Office of Pipeline Safety, Pipeline and Hazardous Materials Safety Administration, U.S. Department of Transportation, PHP–60, 1200 New Jersey Avenue, SE., Washington, DC 20590–0001.

(d) A service agent (*e.g.*, Consortia/Third Party Administrator as defined in part 40) may prepare the MIS report on behalf of an operator. However, each report shall be certified by the operator's anti-drug manager or designated representative for accuracy and completeness.

[68 FR 75466, Dec. 31, 2003, as amended by Amdt. 199–20, 69 FR 32898, June 14, 2004; 70 FR 11140, Mar. 8, 2005; 73 FR 16571, Mar. 28, 2008; 74 FR 2895, Jan. 16, 2009]

§ 199.231 Access to facilities and records.

(a) Except as required by law or expressly authorized or required in this subpart, no employer shall release covered employee information that is contained in records required to be maintained in § 199.227.

(b) A covered employee is entitled, upon written request, to obtain copies of any records pertaining to the employee's use of alcohol, including any records pertaining to his or her alcohol tests. The operator shall promptly provide the records requested by the employee. Access to an employee's records shall not be contingent upon payment for records other than those specifically requested.

(c) Each operator shall permit access to all facilities utilized in complying with the requirements of this subpart to the Secretary of Transportation, any DOT agency, or a representative of a state agency with regulatory authority over the operator.

(d) Each operator shall make available copies of all results for employer alcohol testing conducted under this subpart and any other information pertaining to the operator's alcohol misuse prevention program, when requested by the Secretary of Transportation, any DOT agency with regulatory authority over the operator, or a representative of a state agency with regulatory authority over the operator.

The information shall include name-specific alcohol test results, records, and reports.

(e) When requested by the National Transportation Safety Board as part of an accident investigation, an operator shall disclose information related to the operator's administration of any post- accident alcohol tests administered following the accident under investigation.

(f) An operator shall make records available to a subsequent employer upon receipt of the written request from the covered employee. Disclosure by the subsequent employer is permitted only as expressly authorized by the terms of the employee's written request.

(g) An operator may disclose information without employee consent as provided by DOT Procedures concerning certain legal proceedings.

(h) An operator shall release information regarding a covered employee's records as directed by the specific, written consent of the employee authorizing release of the information to an identified person. Release of such information by the person receiving the information is permitted only in accordance with the terms of the employee's consent.

[Amdt. 199–9, 59 FR 7430, Feb. 15, 1994, as amended by Amdt. 199–19, 66 FR 47119, Sept. 11, 2001]

§ 199.233 Removal from covered function.

Except as provided in §§ 199.239 through 199.243, no operator shall permit any covered employee to perform covered functions if the employee has engaged in conduct prohibited by §§ 199.215 through 199.223 or an alcohol misuse rule of another DOT agency.

§ 199.235 Required evaluation and testing.

No operator shall permit a covered employee who has engaged in conduct prohibited by §§ 199.215 through 199.223 to perform covered functions unless the employee has met the requirements of § 199.243.

§ 199.237 Other alcohol-related conduct.

(a) No operator shall permit a covered employee tested under the provisions of § 199.225, who is found to have an alcohol concentration of 0.02 or greater but less than 0.04, to perform or continue to perform covered functions, until:

(1) The employee's alcohol concentration measures less than 0.02 in accordance with a test administered under § 199.225(e); or

(2) The start of the employee's next regularly scheduled duty period, but not less than eight hours following administration of the test.

(b) Except as provided in paragraph (a) of this section, no operator shall take any action under this subpart against an employee based solely on test results showing an alcohol concentration less than 0.04. This does not prohibit an operator with authority independent of this subpart from taking any action otherwise consistent with law.

§ 199.239 Operator obligation to promulgate a policy on the misuse of alcohol.

(a) *General requirements*. Each operator shall provide educational materials that explain these alcohol misuse requirements and the operator's policies and procedures with respect to meeting those requirements.

(1) The operator shall ensure that a copy of these materials is distributed to each covered employee prior to start of alcohol testing under this subpart, and to each person subsequently hired for or transferred to a covered position.

(2) Each operator shall provide written notice to representatives of employee organizations of the availability of this information.

(b) *Required content*. The materials to be made available to covered employees shall include detailed discussion of at least the following:

(1) The identity of the person designated by the operator to answer covered employee questions about the materials.

(2) The categories of employees who are subject to the provisions of this subpart.

(3) Sufficient information about the covered functions performed by those employees to make clear what period of the work day the covered employee is required to be in compliance with this subpart.

(4) Specific information concerning covered employee conduct that is prohibited by this subpart.

(5) The circumstances under which a covered employee will be tested for alcohol under this subpart.

(6) The procedures that will be used to test for the presence of alcohol, protect the covered employee and the integrity of the breath testing process, safeguard the validity of the test results, and ensure that those results are attributed to the correct employee.

(7) The requirement that a covered employee submit to alcohol tests administered in accordance with this subpart.

(8) An explanation of what constitutes a refusal to submit to an alcohol test and the attendant consequences.

(9) The consequences for covered employees found to have violated the prohibitions under this subpart, including the requirement that the employee be removed immediately from covered functions, and the procedures under § 199.243.

(10) The consequences for covered employees found to have an alcohol concentration of 0.02 or greater but less than 0.04.

(11) Information concerning the effects of alcohol misuse on an individual's health, work, and personal life; signs and symptoms of an alcohol problem (the employee's or a coworker's); and including intervening evaluating and resolving problems associated with the misuse of alcohol including intervening when an alcohol problem is suspected, confrontation, referral to any available EAP, and/or referral to management.

(c) *Optional provisions.* The materials supplied to covered employees may also include information on additional operator policies with respect to the use or possession of alcohol, including any consequences for an employee found to have a specified alcohol level, that are based on the operator's authority independent of this subpart. Any such additional policies or consequences shall be clearly described as being based on independent authority.

§ 199.241 Training for supervisors.

Each operator shall ensure that persons designated to determine whether reasonable suspicion exists to require a covered employee to undergo alcohol testing under § 199.225(b) receive at least 60 minutes of training on the physical, behavioral, speech, and performance indicators of probable alcohol misuse.

§ 199.243 Referral, evaluation, and treatment.

(a) Each covered employee who has engaged in conduct prohibited by §§ 199.215 through 199.223 of this subpart shall be advised of the resources available to the covered employee in evaluating and resolving problems associated with the misuse of alcohol, including the names, addresses, and telephone numbers of substance abuse professionals and counseling and treatment programs.

(b) Each covered employee who engages in conduct prohibited under §§ 199.215 through 199.223 shall be evaluated by a substance abuse professional who shall determine what assistance, if any, the employee needs in resolving problems associated with alcohol misuse.

(c)(1) Before a covered employee returns to duty requiring the performance of a covered function after engaging in conduct prohibited by §§ 199.215 through 199.223 of this subpart, the employee shall undergo a return-to-duty alcohol test with a result indicating an alcohol concentration of less than 0.02.

(2) In addition, each covered employee identified as needing assistance in resolving problems associated with alcohol misuse—

(i) Shall be evaluated by a substance abuse professional to determine that the employee has properly followed any rehabilitation program prescribed under paragraph (b) of this section, and

(ii) Shall be subject to unannounced follow-up alcohol tests administered by the operator following the employee's return to duty. The number and frequency of such follow-up testing shall be determined by a substance abuse

professional, but shall consist of at least six tests in the first 12 months following the employee's return to duty. In addition, follow-up testing may include testing for drugs, as directed by the substance abuse professional, to be performed in accordance with 49 CFR part 40. Follow-up testing shall not exceed 60 months from the date of the employee's return to duty. The substance abuse professional may terminate the requirement for follow-up testing at any time after the first six tests have been administered, if the substance abuse professional determines that such testing is no longer necessary.

(d) Evaluation and rehabilitation may be provided by the operator, by a substance abuse professional under contract with the operator, or by a substance abuse professional not affiliated with the operator. The choice of substance abuse professional and assignment of costs shall be made in accordance with the operator/employee agreements and operator/employee policies.

(e) The operator shall ensure that a substance abuse professional who determines that a covered employee requires assistance in resolving problems with alcohol misuse does not refer the employee to the substance abuse professional's private practice or to a person or organization from which the substance abuse professional receives remuneration or in which the substance abuse professional has a financial interest. This paragraph does not prohibit a substance abuse professional from referring an employee for assistance provided through—

(1) A public agency, such as a State, county, or municipality;

(2) The operator or a person under contract to provide treatment for alcohol problems on behalf of the operator;

(3) The sole source of therapeutically appropriate treatment under the employee's health insurance program; or

(4) The sole source of therapeutically appropriate treatment reasonably accessible to the employee.

§ 199.245 Contractor employees.

(a) With respect to those covered employees who are contractors or employed by a contractor, an operator may provide by contract that the alcohol testing, training and education required by this subpart be carried out by the contractor provided:

(b) The operator remains responsible for ensuring that the requirements of this subpart and part 40 of this title are complied with; and

(c) The contractor allows access to property and records by the operator, the Administrator, any DOT agency with regulatory authority over the operator or covered employee, and, if the operator is subject to the jurisdiction of a state agency, a representative of the state agency for the purposes of monitoring the operator's compliance with the requirements of this subpart and part 40 of this title.

FINDING AIDS

A list of CFR titles, subtitles, chapters, subchapters and parts and an alphabetical list of agencies publishing in the CFR are included in the CFR Index and Finding Aids volume to the Code of Federal Regulations which is published separately and revised annually.

Table of CFR Titles and Chapters
Alphabetical List of Agencies Appearing in the CFR
List of CFR Sections Affected

Table of CFR Titles and Chapters

(Revised as of October 1, 2014)

Title 1—General Provisions

I Administrative Committee of the Federal Register (Parts 1—49)
II Office of the Federal Register (Parts 50—299)
III Administrative Conference of the United States (Parts 300—399)
IV Miscellaneous Agencies (Parts 400—500)

Title 2—Grants and Agreements

SUBTITLE A—OFFICE OF MANAGEMENT AND BUDGET GUIDANCE FOR GRANTS AND AGREEMENTS
I Office of Management and Budget Governmentwide Guidance for Grants and Agreements (Parts 2—199)
II Office of Management and Budget Guidance (Parts 200—299)
SUBTITLE B—FEDERAL AGENCY REGULATIONS FOR GRANTS AND AGREEMENTS
III Department of Health and Human Services (Parts 300—399)
IV Department of Agriculture (Parts 400—499)
VI Department of State (Parts 600—699)
VII Agency for International Development (Parts 700—799)
VIII Department of Veterans Affairs (Parts 800—899)
IX Department of Energy (Parts 900—999)
XI Department of Defense (Parts 1100—1199)
XII Department of Transportation (Parts 1200—1299)
XIII Department of Commerce (Parts 1300—1399)
XIV Department of the Interior (Parts 1400—1499)
XV Environmental Protection Agency (Parts 1500—1599)
XVIII National Aeronautics and Space Administration (Parts 1800—1899)
XX United States Nuclear Regulatory Commission (Parts 2000—2099)
XXII Corporation for National and Community Service (Parts 2200—2299)
XXIII Social Security Administration (Parts 2300—2399)
XXIV Housing and Urban Development (Parts 2400—2499)
XXV National Science Foundation (Parts 2500—2599)
XXVI National Archives and Records Administration (Parts 2600—2699)
XXVII Small Business Administration (Parts 2700—2799)
XXVIII Department of Justice (Parts 2800—2899)

Title 2—Grants and Agreements—Continued

Chap.	
XXX	Department of Homeland Security (Parts 3000—3099)
XXXI	Institute of Museum and Library Services (Parts 3100—3199)
XXXII	National Endowment for the Arts (Parts 3200—3299)
XXXIII	National Endowment for the Humanities (Parts 3300—3399)
XXXIV	Department of Education (Parts 3400—3499)
XXXV	Export-Import Bank of the United States (Parts 3500—3599)
XXXVII	Peace Corps (Parts 3700—3799)
LVIII	Election Assistance Commission (Parts 5800—5899)

Title 3—The President

I	Executive Office of the President (Parts 100—199)

Title 4—Accounts

I	Government Accountability Office (Parts 1—199)
II	Recovery Accountability and Transparency Board (Parts 200—299)

Title 5—Administrative Personnel

I	Office of Personnel Management (Parts 1—1199)
II	Merit Systems Protection Board (Parts 1200—1299)
III	Office of Management and Budget (Parts 1300—1399)
V	The International Organizations Employees Loyalty Board (Parts 1500—1599)
VI	Federal Retirement Thrift Investment Board (Parts 1600—1699)
VIII	Office of Special Counsel (Parts 1800—1899)
IX	Appalachian Regional Commission (Parts 1900—1999)
XI	Armed Forces Retirement Home (Parts 2100—2199)
XIV	Federal Labor Relations Authority, General Counsel of the Federal Labor Relations Authority and Federal Service Impasses Panel (Parts 2400—2499)
XV	Office of Administration, Executive Office of the President (Parts 2500—2599)
XVI	Office of Government Ethics (Parts 2600—2699)
XXI	Department of the Treasury (Parts 3100—3199)
XXII	Federal Deposit Insurance Corporation (Parts 3200—3299)
XXIII	Department of Energy (Parts 3300—3399)
XXIV	Federal Energy Regulatory Commission (Parts 3400—3499)
XXV	Department of the Interior (Parts 3500—3599)
XXVI	Department of Defense (Parts 3600—3699)
XXVIII	Department of Justice (Parts 3800—3899)
XXIX	Federal Communications Commission (Parts 3900—3999)
XXX	Farm Credit System Insurance Corporation (Parts 4000—4099)
XXXI	Farm Credit Administration (Parts 4100—4199)

Title 5—Administrative Personnel—Continued

Chap.	
XXXIII	Overseas Private Investment Corporation (Parts 4300—4399)
XXXIV	Securities and Exchange Commission (Parts 4400—4499)
XXXV	Office of Personnel Management (Parts 4500—4599)
XXXVII	Federal Election Commission (Parts 4700—4799)
XL	Interstate Commerce Commission (Parts 5000—5099)
XLI	Commodity Futures Trading Commission (Parts 5100—5199)
XLII	Department of Labor (Parts 5200—5299)
XLIII	National Science Foundation (Parts 5300—5399)
XLV	Department of Health and Human Services (Parts 5500—5599)
XLVI	Postal Rate Commission (Parts 5600—5699)
XLVII	Federal Trade Commission (Parts 5700—5799)
XLVIII	Nuclear Regulatory Commission (Parts 5800—5899)
XLIX	Federal Labor Relations Authority (Parts 5900—5999)
L	Department of Transportation (Parts 6000—6099)
LII	Export-Import Bank of the United States (Parts 6200—6299)
LIII	Department of Education (Parts 6300—6399)
LIV	Environmental Protection Agency (Parts 6400—6499)
LV	National Endowment for the Arts (Parts 6500—6599)
LVI	National Endowment for the Humanities (Parts 6600—6699)
LVII	General Services Administration (Parts 6700—6799)
LVIII	Board of Governors of the Federal Reserve System (Parts 6800—6899)
LIX	National Aeronautics and Space Administration (Parts 6900—6999)
LX	United States Postal Service (Parts 7000—7099)
LXI	National Labor Relations Board (Parts 7100—7199)
LXII	Equal Employment Opportunity Commission (Parts 7200—7299)
LXIII	Inter-American Foundation (Parts 7300—7399)
LXIV	Merit Systems Protection Board (Parts 7400—7499)
LXV	Department of Housing and Urban Development (Parts 7500—7599)
LXVI	National Archives and Records Administration (Parts 7600—7699)
LXVII	Institute of Museum and Library Services (Parts 7700—7799)
LXVIII	Commission on Civil Rights (Parts 7800—7899)
LXIX	Tennessee Valley Authority (Parts 7900—7999)
LXX	Court Services and Offender Supervision Agency for the District of Columbia (Parts 8000—8099)
LXXI	Consumer Product Safety Commission (Parts 8100—8199)
LXXIII	Department of Agriculture (Parts 8300—8399)
LXXIV	Federal Mine Safety and Health Review Commission (Parts 8400—8499)
LXXVI	Federal Retirement Thrift Investment Board (Parts 8600—8699)
LXXVII	Office of Management and Budget (Parts 8700—8799)
LXXX	Federal Housing Finance Agency (Parts 9000—9099)
LXXXIII	Special Inspector General for Afghanistan Reconstruction (Parts 9300—9399)

Title 5—Administrative Personnel—Continued

Chap.

LXXXIV Bureau of Consumer Financial Protection (Parts 9400—9499)

LXXXVI National Credit Union Administration (Parts 9600—9699)

XCVII Department of Homeland Security Human Resources Management System (Department of Homeland Security—Office of Personnel Management) (Parts 9700—9799)

XCVII Council of the Inspectors General on Integrity and Efficiency (Parts 9800—9899)

XCIX Military Compensation and Retirement Modernization Commission (Parts 9900—9999)

Title 6—Domestic Security

I Department of Homeland Security, Office of the Secretary (Parts 1—99)

X Privacy and Civil Liberties Oversight Board (Parts 1000—1099)

Title 7—Agriculture

SUBTITLE A—OFFICE OF THE SECRETARY OF AGRICULTURE (PARTS 0—26)

SUBTITLE B—REGULATIONS OF THE DEPARTMENT OF AGRICULTURE

I Agricultural Marketing Service (Standards, Inspections, Marketing Practices), Department of Agriculture (Parts 27—209)

II Food and Nutrition Service, Department of Agriculture (Parts 210—299)

III Animal and Plant Health Inspection Service, Department of Agriculture (Parts 300—399)

IV Federal Crop Insurance Corporation, Department of Agriculture (Parts 400—499)

V Agricultural Research Service, Department of Agriculture (Parts 500—599)

VI Natural Resources Conservation Service, Department of Agriculture (Parts 600—699)

VII Farm Service Agency, Department of Agriculture (Parts 700—799)

VIII Grain Inspection, Packers and Stockyards Administration (Federal Grain Inspection Service), Department of Agriculture (Parts 800—899)

IX Agricultural Marketing Service (Marketing Agreements and Orders; Fruits, Vegetables, Nuts), Department of Agriculture (Parts 900—999)

X Agricultural Marketing Service (Marketing Agreements and Orders; Milk), Department of Agriculture (Parts 1000—1199)

XI Agricultural Marketing Service (Marketing Agreements and Orders; Miscellaneous Commodities), Department of Agriculture (Parts 1200—1299)

XIV Commodity Credit Corporation, Department of Agriculture (Parts 1400—1499)

XV Foreign Agricultural Service, Department of Agriculture (Parts 1500—1599)

Title 7—Agriculture—Continued

Chap.	
XVI	Rural Telephone Bank, Department of Agriculture (Parts 1600—1699)
XVII	Rural Utilities Service, Department of Agriculture (Parts 1700—1799)
XVIII	Rural Housing Service, Rural Business-Cooperative Service, Rural Utilities Service, and Farm Service Agency, Department of Agriculture (Parts 1800—2099)
XX	Local Television Loan Guarantee Board (Parts 2200—2299)
XXV	Office of Advocacy and Outreach, Department of Agriculture (Parts 2500—2599)
XXVI	Office of Inspector General, Department of Agriculture (Parts 2600—2699)
XXVII	Office of Information Resources Management, Department of Agriculture (Parts 2700—2799)
XXVIII	Office of Operations, Department of Agriculture (Parts 2800—2899)
XXIX	Office of Energy Policy and New Uses, Department of Agriculture (Parts 2900—2999)
XXX	Office of the Chief Financial Officer, Department of Agriculture (Parts 3000—3099)
XXXI	Office of Environmental Quality, Department of Agriculture (Parts 3100—3199)
XXXII	Office of Procurement and Property Management, Department of Agriculture (Parts 3200—3299)
XXXIII	Office of Transportation, Department of Agriculture (Parts 3300—3399)
XXXIV	National Institute of Food and Agriculture (Parts 3400—3499)
XXXV	Rural Housing Service, Department of Agriculture (Parts 3500—3599)
XXXVI	National Agricultural Statistics Service, Department of Agriculture (Parts 3600—3699)
XXXVII	Economic Research Service, Department of Agriculture (Parts 3700—3799)
XXXVIII	World Agricultural Outlook Board, Department of Agriculture (Parts 3800—3899)
XLI	[Reserved]
XLII	Rural Business-Cooperative Service and Rural Utilities Service, Department of Agriculture (Parts 4200—4299)

Title 8—Aliens and Nationality

I	Department of Homeland Security (Immigration and Naturalization) (Parts 1—499)
V	Executive Office for Immigration Review, Department of Justice (Parts 1000—1399)

Title 9—Animals and Animal Products

I	Animal and Plant Health Inspection Service, Department of Agriculture (Parts 1—199)

Title 9—Animals and Animal Products—Continued

Chap.

II Grain Inspection, Packers and Stockyards Administration (Packers and Stockyards Programs), Department of Agriculture (Parts 200—299)

III Food Safety and Inspection Service, Department of Agriculture (Parts 300—599)

Title 10—Energy

I Nuclear Regulatory Commission (Parts 0—199)

II Department of Energy (Parts 200—699)

III Department of Energy (Parts 700—999)

X Department of Energy (General Provisions) (Parts 1000—1099)

XIII Nuclear Waste Technical Review Board (Parts 1300—1399)

XVII Defense Nuclear Facilities Safety Board (Parts 1700—1799)

XVIII Northeast Interstate Low-Level Radioactive Waste Commission (Parts 1800—1899)

Title 11—Federal Elections

I Federal Election Commission (Parts 1—9099)

II Election Assistance Commission (Parts 9400—9499)

Title 12—Banks and Banking

I Comptroller of the Currency, Department of the Treasury (Parts 1—199)

II Federal Reserve System (Parts 200—299)

III Federal Deposit Insurance Corporation (Parts 300—399)

IV Export-Import Bank of the United States (Parts 400—499)

V Office of Thrift Supervision, Department of the Treasury (Parts 500—599)

VI Farm Credit Administration (Parts 600—699)

VII National Credit Union Administration (Parts 700—799)

VIII Federal Financing Bank (Parts 800—899)

IX Federal Housing Finance Board (Parts 900—999)

X Bureau of Consumer Financial Protection (Parts 1000—1099)

XI Federal Financial Institutions Examination Council (Parts 1100—1199)

XII Federal Housing Finance Agency (Parts 1200—1299)

XIII Financial Stability Oversight Council (Parts 1300—1399)

XIV Farm Credit System Insurance Corporation (Parts 1400—1499)

XV Department of the Treasury (Parts 1500—1599)

XVI Office of Financial Research (Parts 1600—1699)

XVII Office of Federal Housing Enterprise Oversight, Department of Housing and Urban Development (Parts 1700—1799)

XVIII Community Development Financial Institutions Fund, Department of the Treasury (Parts 1800—1899)

Title 13—Business Credit and Assistance

Chap.

I Small Business Administration (Parts 1—199)

III Economic Development Administration, Department of Commerce (Parts 300—399)

IV Emergency Steel Guarantee Loan Board (Parts 400—499)

V Emergency Oil and Gas Guaranteed Loan Board (Parts 500—599)

Title 14—Aeronautics and Space

I Federal Aviation Administration, Department of Transportation (Parts 1—199)

II Office of the Secretary, Department of Transportation (Aviation Proceedings) (Parts 200—399)

III Commercial Space Transportation, Federal Aviation Administration, Department of Transportation (Parts 400—1199)

V National Aeronautics and Space Administration (Parts 1200—1299)

VI Air Transportation System Stabilization (Parts 1300—1399)

Title 15—Commerce and Foreign Trade

SUBTITLE A—OFFICE OF THE SECRETARY OF COMMERCE (PARTS 0—29)

SUBTITLE B—REGULATIONS RELATING TO COMMERCE AND FOREIGN TRADE

I Bureau of the Census, Department of Commerce (Parts 30—199)

II National Institute of Standards and Technology, Department of Commerce (Parts 200—299)

III International Trade Administration, Department of Commerce (Parts 300—399)

IV Foreign-Trade Zones Board, Department of Commerce (Parts 400—499)

VII Bureau of Industry and Security, Department of Commerce (Parts 700—799)

VIII Bureau of Economic Analysis, Department of Commerce (Parts 800—899)

IX National Oceanic and Atmospheric Administration, Department of Commerce (Parts 900—999)

XI Technology Administration, Department of Commerce (Parts 1100—1199)

XIII East-West Foreign Trade Board (Parts 1300—1399)

XIV Minority Business Development Agency (Parts 1400—1499)

SUBTITLE C—REGULATIONS RELATING TO FOREIGN TRADE AGREEMENTS

XX Office of the United States Trade Representative (Parts 2000—2099)

SUBTITLE D—REGULATIONS RELATING TO TELECOMMUNICATIONS AND INFORMATION

XXIII National Telecommunications and Information Administration, Department of Commerce (Parts 2300—2399)

Title 16—Commercial Practices

Chap.

I Federal Trade Commission (Parts 0—999)

II Consumer Product Safety Commission (Parts 1000—1799)

Title 17—Commodity and Securities Exchanges

I Commodity Futures Trading Commission (Parts 1—199)

II Securities and Exchange Commission (Parts 200—399)

IV Department of the Treasury (Parts 400—499)

Title 18—Conservation of Power and Water Resources

I Federal Energy Regulatory Commission, Department of Energy (Parts 1—399)

III Delaware River Basin Commission (Parts 400—499)

VI Water Resources Council (Parts 700—799)

VIII Susquehanna River Basin Commission (Parts 800—899)

XIII Tennessee Valley Authority (Parts 1300—1399)

Title 19—Customs Duties

I U.S. Customs and Border Protection, Department of Homeland Security; Department of the Treasury (Parts 0—199)

II United States International Trade Commission (Parts 200—299)

III International Trade Administration, Department of Commerce (Parts 300—399)

IV U.S. Immigration and Customs Enforcement, Department of Homeland Security (Parts 400—599)

Title 20—Employees' Benefits

I Office of Workers' Compensation Programs, Department of Labor (Parts 1—199)

II Railroad Retirement Board (Parts 200—399)

III Social Security Administration (Parts 400—499)

IV Employees' Compensation Appeals Board, Department of Labor (Parts 500—599)

V Employment and Training Administration, Department of Labor (Parts 600—699)

VI Office of Workers' Compensation Programs, Department of Labor (Parts 700—799)

VII Benefits Review Board, Department of Labor (Parts 800—899)

VIII Joint Board for the Enrollment of Actuaries (Parts 900—999)

IX Office of the Assistant Secretary for Veterans' Employment and Training Service, Department of Labor (Parts 1000—1099)

Title 21—Food and Drugs

Chap.

I Food and Drug Administration, Department of Health and Human Services (Parts 1—1299)

II Drug Enforcement Administration, Department of Justice (Parts 1300—1399)

III Office of National Drug Control Policy (Parts 1400—1499)

Title 22—Foreign Relations

I Department of State (Parts 1—199)

II Agency for International Development (Parts 200—299)

III Peace Corps (Parts 300—399)

IV International Joint Commission, United States and Canada (Parts 400—499)

V Broadcasting Board of Governors (Parts 500—599)

VII Overseas Private Investment Corporation (Parts 700—799)

IX Foreign Service Grievance Board (Parts 900—999)

X Inter-American Foundation (Parts 1000—1099)

XI International Boundary and Water Commission, United States and Mexico, United States Section (Parts 1100—1199)

XII United States International Development Cooperation Agency (Parts 1200—1299)

XIII Millennium Challenge Corporation (Parts 1300—1399)

XIV Foreign Service Labor Relations Board; Federal Labor Relations Authority; General Counsel of the Federal Labor Relations Authority; and the Foreign Service Impasse Disputes Panel (Parts 1400—1499)

XV African Development Foundation (Parts 1500—1599)

XVI Japan-United States Friendship Commission (Parts 1600—1699)

XVII United States Institute of Peace (Parts 1700—1799)

Title 23—Highways

I Federal Highway Administration, Department of Transportation (Parts 1—999)

II National Highway Traffic Safety Administration and Federal Highway Administration, Department of Transportation (Parts 1200—1299)

III National Highway Traffic Safety Administration, Department of Transportation (Parts 1300—1399)

Title 24—Housing and Urban Development

SUBTITLE A—OFFICE OF THE SECRETARY, DEPARTMENT OF HOUSING AND URBAN DEVELOPMENT (PARTS 0—99)

SUBTITLE B—REGULATIONS RELATING TO HOUSING AND URBAN DEVELOPMENT

I Office of Assistant Secretary for Equal Opportunity, Department of Housing and Urban Development (Parts 100—199)

Title 24—Housing and Urban Development—Continued

Chap.

II Office of Assistant Secretary for Housing-Federal Housing Commissioner, Department of Housing and Urban Development (Parts 200—299)

III Government National Mortgage Association, Department of Housing and Urban Development (Parts 300—399)

IV Office of Housing and Office of Multifamily Housing Assistance Restructuring, Department of Housing and Urban Development (Parts 400—499)

V Office of Assistant Secretary for Community Planning and Development, Department of Housing and Urban Development (Parts 500—599)

VI Office of Assistant Secretary for Community Planning and Development, Department of Housing and Urban Development (Parts 600—699) [Reserved]

VII Office of the Secretary, Department of Housing and Urban Development (Housing Assistance Programs and Public and Indian Housing Programs) (Parts 700—799)

VIII Office of the Assistant Secretary for Housing—Federal Housing Commissioner, Department of Housing and Urban Development (Section 8 Housing Assistance Programs, Section 202 Direct Loan Program, Section 202 Supportive Housing for the Elderly Program and Section 811 Supportive Housing for Persons With Disabilities Program) (Parts 800—899)

IX Office of Assistant Secretary for Public and Indian Housing, Department of Housing and Urban Development (Parts 900—1699)

X Office of Assistant Secretary for Housing—Federal Housing Commissioner, Department of Housing and Urban Development (Interstate Land Sales Registration Program) (Parts 1700—1799)

XII Office of Inspector General, Department of Housing and Urban Development (Parts 2000—2099)

XV Emergency Mortgage Insurance and Loan Programs, Department of Housing and Urban Development (Parts 2700—2799) [Reserved]

XX Office of Assistant Secretary for Housing—Federal Housing Commissioner, Department of Housing and Urban Development (Parts 3200—3899)

XXIV Board of Directors of the HOPE for Homeowners Program (Parts 4000—4099) [Reserved]

XXV Neighborhood Reinvestment Corporation (Parts 4100—4199)

Title 25—Indians

I Bureau of Indian Affairs, Department of the Interior (Parts 1—299)

II Indian Arts and Crafts Board, Department of the Interior (Parts 300—399)

III National Indian Gaming Commission, Department of the Interior (Parts 500—599)

IV Office of Navajo and Hopi Indian Relocation (Parts 700—799)

Title 25—Indians—Continued

Chap.

V Bureau of Indian Affairs, Department of the Interior, and Indian Health Service, Department of Health and Human Services (Part 900)

VI Office of the Assistant Secretary-Indian Affairs, Department of the Interior (Parts 1000—1199)

VII Office of the Special Trustee for American Indians, Department of the Interior (Parts 1200—1299)

Title 26—Internal Revenue

I Internal Revenue Service, Department of the Treasury (Parts 1—End)

Title 27—Alcohol, Tobacco Products and Firearms

I Alcohol and Tobacco Tax and Trade Bureau, Department of the Treasury (Parts 1—399)

II Bureau of Alcohol, Tobacco, Firearms, and Explosives, Department of Justice (Parts 400—699)

Title 28—Judicial Administration

I Department of Justice (Parts 0—299)

III Federal Prison Industries, Inc., Department of Justice (Parts 300—399)

V Bureau of Prisons, Department of Justice (Parts 500—599)

VI Offices of Independent Counsel, Department of Justice (Parts 600—699)

VII Office of Independent Counsel (Parts 700—799)

VIII Court Services and Offender Supervision Agency for the District of Columbia (Parts 800—899)

IX National Crime Prevention and Privacy Compact Council (Parts 900—999)

XI Department of Justice and Department of State (Parts 1100—1199)

Title 29—Labor

SUBTITLE A—OFFICE OF THE SECRETARY OF LABOR (PARTS 0—99)

SUBTITLE B—REGULATIONS RELATING TO LABOR

I National Labor Relations Board (Parts 100—199)

II Office of Labor-Management Standards, Department of Labor (Parts 200—299)

III National Railroad Adjustment Board (Parts 300—399)

IV Office of Labor-Management Standards, Department of Labor (Parts 400—499)

V Wage and Hour Division, Department of Labor (Parts 500—899)

IX Construction Industry Collective Bargaining Commission (Parts 900—999)

Title 29—Labor—Continued

Chap.

X National Mediation Board (Parts 1200—1299)

XII Federal Mediation and Conciliation Service (Parts 1400—1499)

XIV Equal Employment Opportunity Commission (Parts 1600—1699)

XVII Occupational Safety and Health Administration, Department of Labor (Parts 1900—1999)

XX Occupational Safety and Health Review Commission (Parts 2200—2499)

XXV Employee Benefits Security Administration, Department of Labor (Parts 2500—2599)

XXVII Federal Mine Safety and Health Review Commission (Parts 2700—2799)

XL Pension Benefit Guaranty Corporation (Parts 4000—4999)

Title 30—Mineral Resources

I Mine Safety and Health Administration, Department of Labor (Parts 1—199)

II Bureau of Safety and Environmental Enforcement, Department of the Interior (Parts 200—299)

IV Geological Survey, Department of the Interior (Parts 400—499)

V Bureau of Ocean Energy Management, Department of the Interior (Parts 500—599)

VII Office of Surface Mining Reclamation and Enforcement, Department of the Interior (Parts 700—999)

XII Office of Natural Resources Revenue, Department of the Interior (Parts 1200—1299)

Title 31—Money and Finance: Treasury

SUBTITLE A—OFFICE OF THE SECRETARY OF THE TREASURY (PARTS 0—50)

SUBTITLE B—REGULATIONS RELATING TO MONEY AND FINANCE

I Monetary Offices, Department of the Treasury (Parts 51—199)

II Fiscal Service, Department of the Treasury (Parts 200—399)

IV Secret Service, Department of the Treasury (Parts 400—499)

V Office of Foreign Assets Control, Department of the Treasury (Parts 500—599)

VI Bureau of Engraving and Printing, Department of the Treasury (Parts 600—699)

VII Federal Law Enforcement Training Center, Department of the Treasury (Parts 700—799)

VIII Office of International Investment, Department of the Treasury (Parts 800—899)

IX Federal Claims Collection Standards (Department of the Treasury—Department of Justice) (Parts 900—999)

X Financial Crimes Enforcement Network, Department of the Treasury (Parts 1000—1099)

Title 32—National Defense

Chap.

SUBTITLE A—DEPARTMENT OF DEFENSE

I Office of the Secretary of Defense (Parts 1—399)

V Department of the Army (Parts 400—699)

VI Department of the Navy (Parts 700—799)

VII Department of the Air Force (Parts 800—1099)

SUBTITLE B—OTHER REGULATIONS RELATING TO NATIONAL DEFENSE

XII Defense Logistics Agency (Parts 1200—1299)

XVI Selective Service System (Parts 1600—1699)

XVII Office of the Director of National Intelligence (Parts 1700—1799)

XVIII National Counterintelligence Center (Parts 1800—1899)

XIX Central Intelligence Agency (Parts 1900—1999)

XX Information Security Oversight Office, National Archives and Records Administration (Parts 2000—2099)

XXI National Security Council (Parts 2100—2199)

XXIV Office of Science and Technology Policy (Parts 2400—2499)

XXVII Office for Micronesian Status Negotiations (Parts 2700—2799)

XXVIII Office of the Vice President of the United States (Parts 2800—2899)

Title 33—Navigation and Navigable Waters

I Coast Guard, Department of Homeland Security (Parts 1—199)

II Corps of Engineers, Department of the Army (Parts 200—399)

IV Saint Lawrence Seaway Development Corporation, Department of Transportation (Parts 400—499)

Title 34—Education

SUBTITLE A—OFFICE OF THE SECRETARY, DEPARTMENT OF EDUCATION (PARTS 1—99)

SUBTITLE B—REGULATIONS OF THE OFFICES OF THE DEPARTMENT OF EDUCATION

I Office for Civil Rights, Department of Education (Parts 100—199)

II Office of Elementary and Secondary Education, Department of Education (Parts 200—299)

III Office of Special Education and Rehabilitative Services, Department of Education (Parts 300—399)

IV Office of Vocational and Adult Education, Department of Education (Parts 400—499)

V Office of Bilingual Education and Minority Languages Affairs, Department of Education (Parts 500—599)

VI Office of Postsecondary Education, Department of Education (Parts 600—699)

VII Office of Educational Research and Improvement, Department of Education (Parts 700—799)[Reserved]

SUBTITLE C—REGULATIONS RELATING TO EDUCATION

Title 34—Education—Continued

Chap.

XI National Institute for Literacy (Parts 1100—1199)

XII National Council on Disability (Parts 1200—1299)

Title 35 [Reserved]

Title 36—Parks, Forests, and Public Property

I National Park Service, Department of the Interior (Parts 1—199)

II Forest Service, Department of Agriculture (Parts 200—299)

III Corps of Engineers, Department of the Army (Parts 300—399)

IV American Battle Monuments Commission (Parts 400—499)

V Smithsonian Institution (Parts 500—599)

VI [Reserved]

VII Library of Congress (Parts 700—799)

VIII Advisory Council on Historic Preservation (Parts 800—899)

IX Pennsylvania Avenue Development Corporation (Parts 900—999)

X Presidio Trust (Parts 1000—1099)

XI Architectural and Transportation Barriers Compliance Board (Parts 1100—1199)

XII National Archives and Records Administration (Parts 1200—1299)

XV Oklahoma City National Memorial Trust (Parts 1500—1599)

XVI Morris K. Udall Scholarship and Excellence in National Environmental Policy Foundation (Parts 1600—1699)

Title 37—Patents, Trademarks, and Copyrights

I United States Patent and Trademark Office, Department of Commerce (Parts 1—199)

II U.S. Copyright Office, Library of Congress (Parts 200—299)

III Copyright Royalty Board, Library of Congress (Parts 300—399)

IV Assistant Secretary for Technology Policy, Department of Commerce (Parts 400—599)

Title 38—Pensions, Bonuses, and Veterans' Relief

I Department of Veterans Affairs (Parts 0—199)

II Armed Forces Retirement Home (Parts 200—299)

Title 39—Postal Service

I United States Postal Service (Parts 1—999)

III Postal Regulatory Commission (Parts 3000—3099)

Title 40—Protection of Environment

I Environmental Protection Agency (Parts 1—1099)

Title 40—Protection of Environment—Continued

Chap.

IV Environmental Protection Agency and Department of Justice (Parts 1400—1499)

V Council on Environmental Quality (Parts 1500—1599)

VI Chemical Safety and Hazard Investigation Board (Parts 1600—1699)

VII Environmental Protection Agency and Department of Defense; Uniform National Discharge Standards for Vessels of the Armed Forces (Parts 1700—1799)

VIII Gulf Coast Ecosystem Restoration Council (Parts 1800—1899)

Title 41—Public Contracts and Property Management

SUBTITLE A—FEDERAL PROCUREMENT REGULATIONS SYSTEM [NOTE]

SUBTITLE B—OTHER PROVISIONS RELATING TO PUBLIC CONTRACTS

50 Public Contracts, Department of Labor (Parts 50–1—50–999)

51 Committee for Purchase From People Who Are Blind or Severely Disabled (Parts 51–1—51–99)

60 Office of Federal Contract Compliance Programs, Equal Employment Opportunity, Department of Labor (Parts 60–1—60–999)

61 Office of the Assistant Secretary for Veterans' Employment and Training Service, Department of Labor (Parts 61–1—61–999)

62—100 [Reserved]

SUBTITLE C—FEDERAL PROPERTY MANAGEMENT REGULATIONS SYSTEM

101 Federal Property Management Regulations (Parts 101–1—101–99)

102 Federal Management Regulation (Parts 102–1—102–299)

103—104 [Reserved]

105 General Services Administration (Parts 105–1—105–999)

109 Department of Energy Property Management Regulations (Parts 109–1—109–99)

114 Department of the Interior (Parts 114–1—114–99)

115 Environmental Protection Agency (Parts 115–1—115–99)

128 Department of Justice (Parts 128–1—128–99)

129—200 [Reserved]

SUBTITLE D—OTHER PROVISIONS RELATING TO PROPERTY MANAGEMENT [RESERVED]

SUBTITLE E—FEDERAL INFORMATION RESOURCES MANAGEMENT REGULATIONS SYSTEM [RESERVED]

SUBTITLE F—FEDERAL TRAVEL REGULATION SYSTEM

300 General (Parts 300–1—300–99)

301 Temporary Duty (TDY) Travel Allowances (Parts 301–1—301–99)

302 Relocation Allowances (Parts 302–1—302–99)

303 Payment of Expenses Connected with the Death of Certain Employees (Part 303–1—303–99)

304 Payment of Travel Expenses from a Non-Federal Source (Parts 304–1—304–99)

Title 42—Public Health

Chap.

I Public Health Service, Department of Health and Human Services (Parts 1—199)

IV Centers for Medicare & Medicaid Services, Department of Health and Human Services (Parts 400—599)

V Office of Inspector General-Health Care, Department of Health and Human Services (Parts 1000—1999)

Title 43—Public Lands: Interior

SUBTITLE A—OFFICE OF THE SECRETARY OF THE INTERIOR (PARTS 1—199)

SUBTITLE B—REGULATIONS RELATING TO PUBLIC LANDS

I Bureau of Reclamation, Department of the Interior (Parts 400—999)

II Bureau of Land Management, Department of the Interior (Parts 1000—9999)

III Utah Reclamation Mitigation and Conservation Commission (Parts 10000—10099)

Title 44—Emergency Management and Assistance

I Federal Emergency Management Agency, Department of Homeland Security (Parts 0—399)

IV Department of Commerce and Department of Transportation (Parts 400—499)

Title 45—Public Welfare

SUBTITLE A—DEPARTMENT OF HEALTH AND HUMAN SERVICES (PARTS 1—199)

SUBTITLE B—REGULATIONS RELATING TO PUBLIC WELFARE

II Office of Family Assistance (Assistance Programs), Administration for Children and Families, Department of Health and Human Services (Parts 200—299)

III Office of Child Support Enforcement (Child Support Enforcement Program), Administration for Children and Families, Department of Health and Human Services (Parts 300—399)

IV Office of Refugee Resettlement, Administration for Children and Families, Department of Health and Human Services (Parts 400—499)

V Foreign Claims Settlement Commission of the United States, Department of Justice (Parts 500—599)

VI National Science Foundation (Parts 600—699)

VII Commission on Civil Rights (Parts 700—799)

VIII Office of Personnel Management (Parts 800—899)

X Office of Community Services, Administration for Children and Families, Department of Health and Human Services (Parts 1000—1099)

XI National Foundation on the Arts and the Humanities (Parts 1100—1199)

Title 45—Public Welfare—Continued

Chap.

XII Corporation for National and Community Service (Parts 1200—1299)

XIII Office of Human Development Services, Department of Health and Human Services (Parts 1300—1399)

XVI Legal Services Corporation (Parts 1600—1699)

XVII National Commission on Libraries and Information Science (Parts 1700—1799)

XVIII Harry S. Truman Scholarship Foundation (Parts 1800—1899)

XXI Commission on Fine Arts (Parts 2100—2199)

XXIII Arctic Research Commission (Part 2301)

XXIV James Madison Memorial Fellowship Foundation (Parts 2400—2499)

XXV Corporation for National and Community Service (Parts 2500—2599)

Title 46—Shipping

I Coast Guard, Department of Homeland Security (Parts 1—199)

II Maritime Administration, Department of Transportation (Parts 200—399)

III Coast Guard (Great Lakes Pilotage), Department of Homeland Security (Parts 400—499)

IV Federal Maritime Commission (Parts 500—599)

Title 47—Telecommunication

I Federal Communications Commission (Parts 0—199)

II Office of Science and Technology Policy and National Security Council (Parts 200—299)

III National Telecommunications and Information Administration, Department of Commerce (Parts 300—399)

IV National Telecommunications and Information Administration, Department of Commerce, and National Highway Traffic Safety Administration, Department of Transportation (Parts 400—499)

Title 48—Federal Acquisition Regulations System

1 Federal Acquisition Regulation (Parts 1—99)

2 Defense Acquisition Regulations System, Department of Defense (Parts 200—299)

3 Health and Human Services (Parts 300—399)

4 Department of Agriculture (Parts 400—499)

5 General Services Administration (Parts 500—599)

6 Department of State (Parts 600—699)

7 Agency for International Development (Parts 700—799)

8 Department of Veterans Affairs (Parts 800—899)

9 Department of Energy (Parts 900—999)

Title 48—Federal Acquisition Regulations System—Continued

Chap.

10 Department of the Treasury (Parts 1000—1099)

12 Department of Transportation (Parts 1200—1299)

13 Department of Commerce (Parts 1300—1399)

14 Department of the Interior (Parts 1400—1499)

15 Environmental Protection Agency (Parts 1500—1599)

16 Office of Personnel Management, Federal Employees Health Benefits Acquisition Regulation (Parts 1600—1699)

17 Office of Personnel Management (Parts 1700—1799)

18 National Aeronautics and Space Administration (Parts 1800—1899)

19 Broadcasting Board of Governors (Parts 1900—1999)

20 Nuclear Regulatory Commission (Parts 2000—2099)

21 Office of Personnel Management, Federal Employees Group Life Insurance Federal Acquisition Regulation (Parts 2100—2199)

23 Social Security Administration (Parts 2300—2399)

24 Department of Housing and Urban Development (Parts 2400—2499)

25 National Science Foundation (Parts 2500—2599)

28 Department of Justice (Parts 2800—2899)

29 Department of Labor (Parts 2900—2999)

30 Department of Homeland Security, Homeland Security Acquisition Regulation (HSAR) (Parts 3000—3099)

34 Department of Education Acquisition Regulation (Parts 3400—3499)

51 Department of the Army Acquisition Regulations (Parts 5100—5199)

52 Department of the Navy Acquisition Regulations (Parts 5200—5299)

53 Department of the Air Force Federal Acquisition Regulation Supplement (Parts 5300—5399) [Reserved]

54 Defense Logistics Agency, Department of Defense (Parts 5400—5499)

57 African Development Foundation (Parts 5700—5799)

61 Civilian Board of Contract Appeals, General Services Administration (Parts 6100—6199)

63 Department of Transportation Board of Contract Appeals (Parts 6300—6399)

99 Cost Accounting Standards Board, Office of Federal Procurement Policy, Office of Management and Budget (Parts 9900—9999)

Title 49—Transportation

SUBTITLE A—OFFICE OF THE SECRETARY OF TRANSPORTATION (PARTS 1—99)

SUBTITLE B—OTHER REGULATIONS RELATING TO TRANSPORTATION

I Pipeline and Hazardous Materials Safety Administration, Department of Transportation (Parts 100—199)

Title 49—Transportation—Continued

Chap.

II Federal Railroad Administration, Department of Transportation (Parts 200—299)

III Federal Motor Carrier Safety Administration, Department of Transportation (Parts 300—399)

IV Coast Guard, Department of Homeland Security (Parts 400—499)

V National Highway Traffic Safety Administration, Department of Transportation (Parts 500—599)

VI Federal Transit Administration, Department of Transportation (Parts 600—699)

VII National Railroad Passenger Corporation (AMTRAK) (Parts 700—799)

VIII National Transportation Safety Board (Parts 800—999)

X Surface Transportation Board, Department of Transportation (Parts 1000—1399)

XI Research and Innovative Technology Administration, Department of Transportation (Parts 1400—1499) [Reserved]

XII Transportation Security Administration, Department of Homeland Security (Parts 1500—1699)

Title 50—Wildlife and Fisheries

I United States Fish and Wildlife Service, Department of the Interior (Parts 1—199)

II National Marine Fisheries Service, National Oceanic and Atmospheric Administration, Department of Commerce (Parts 200—299)

III International Fishing and Related Activities (Parts 300—399)

IV Joint Regulations (United States Fish and Wildlife Service, Department of the Interior and National Marine Fisheries Service, National Oceanic and Atmospheric Administration, Department of Commerce); Endangered Species Committee Regulations (Parts 400—499)

V Marine Mammal Commission (Parts 500—599)

VI Fishery Conservation and Management, National Oceanic and Atmospheric Administration, Department of Commerce (Parts 600—699)

Alphabetical List of Agencies Appearing in the CFR

(Revised as of October 1, 2014)

Agency	CFR Title, Subtitle or Chapter
Administrative Committee of the Federal Register	1, I
Administrative Conference of the United States	1, III
Advisory Council on Historic Preservation	36, VIII
Advocacy and Outreach, Office of	7, XXV
Afghanistan Reconstruction, Special Inspector General for	22, LXXXIII
African Development Foundation	22, XV
Federal Acquisition Regulation	48, 57
Agency for International Development	2, VII; 22, II
Federal Acquisition Regulation	48, 7
Agricultural Marketing Service	7, I, IX, X, XI
Agricultural Research Service	7, V
Agriculture Department	2, IV; 5, LXXIII
Advocacy and Outreach, Office of	7, XXV
Agricultural Marketing Service	7, I, IX, X, XI
Agricultural Research Service	7, V
Animal and Plant Health Inspection Service	7, III; 9, I
Chief Financial Officer, Office of	7, XXX
Commodity Credit Corporation	7, XIV
Economic Research Service	7, XXXVII
Energy Policy and New Uses, Office of	2, IX; 7, XXIX
Environmental Quality, Office of	7, XXXI
Farm Service Agency	7, VII, XVIII
Federal Acquisition Regulation	48, 4
Federal Crop Insurance Corporation	7, IV
Food and Nutrition Service	7, II
Food Safety and Inspection Service	9, III
Foreign Agricultural Service	7, XV
Forest Service	36, II
Grain Inspection, Packers and Stockyards Administration	7, VIII; 9, II
Information Resources Management, Office of	7, XXVII
Inspector General, Office of	7, XXVI
National Agricultural Library	7, XLI
National Agricultural Statistics Service	7, XXXVI
National Institute of Food and Agriculture	7, XXXIV
Natural Resources Conservation Service	7, VI
Operations, Office of	7, XXVIII
Procurement and Property Management, Office of	7, XXXII
Rural Business-Cooperative Service	7, XVIII, XLII, L
Rural Development Administration	7, XLII
Rural Housing Service	7, XVIII, XXXV, L
Rural Telephone Bank	7, XVI
Rural Utilities Service	7, XVII, XVIII, XLII, L
Secretary of Agriculture, Office of	7, Subtitle A
Transportation, Office of	7, XXXIII
World Agricultural Outlook Board	7, XXXVIII
Air Force Department	32, VII
Federal Acquisition Regulation Supplement	48, 53
Air Transportation Stabilization Board	14, VI
Alcohol and Tobacco Tax and Trade Bureau	27, I
Alcohol, Tobacco, Firearms, and Explosives, Bureau of	27, II
AMTRAK	49, VII
American Battle Monuments Commission	36, IV
American Indians, Office of the Special Trustee	25, VII

Agency	CFR Title, Subtitle or Chapter
Animal and Plant Health Inspection Service	7, III; 9, I
Appalachian Regional Commission	5, IX
Architectural and Transportation Barriers Compliance Board	36, XI
Arctic Research Commission	45, XXIII
Armed Forces Retirement Home	5, XI
Army Department	32, V
Engineers, Corps of	33, II; 36, III
Federal Acquisition Regulation	48, 51
Bilingual Education and Minority Languages Affairs, Office of	34, V
Blind or Severely Disabled, Committee for Purchase from People Who Are	41, 51
Broadcasting Board of Governors	22, V
Federal Acquisition Regulation	48, 19
Bureau of Ocean Energy Management, Regulation, and Enforcement	30, II
Census Bureau	15, I
Centers for Medicare & Medicaid Services	42, IV
Central Intelligence Agency	32, XIX
Chemical Safety and Hazardous Investigation Board	40, VI
Chief Financial Officer, Office of	7, XXX
Child Support Enforcement, Office of	45, III
Children and Families, Administration for	45, II, III, IV, X
Civil Rights, Commission on	5, LXVIII; 45, VII
Civil Rights, Office for	34, I
Council of the Inspectors General on Integrity and Efficiency	5, XCVIII
Court Services and Offender Supervision Agency for the District of Columbia	5, LXX
Coast Guard	33, I; 46, I; 49, IV
Coast Guard (Great Lakes Pilotage)	46, III
Commerce Department	2, XIII; 44, IV; 50, VI
Census Bureau	15, I
Economic Analysis, Bureau of	15, VIII
Economic Development Administration	13, III
Emergency Management and Assistance	44, IV
Federal Acquisition Regulation	48, 13
Foreign-Trade Zones Board	15, IV
Industry and Security, Bureau of	15, VII
International Trade Administration	15, III; 19, III
National Institute of Standards and Technology	15, II
National Marine Fisheries Service	50, II, IV
National Oceanic and Atmospheric Administration	15, IX; 50, II, III, IV, VI
National Telecommunications and Information Administration	15, XXIII; 47, III, IV
National Weather Service	15, IX
Patent and Trademark Office, United States	37, I
Productivity, Technology and Innovation, Assistant Secretary for	37, IV
Secretary of Commerce, Office of	15, Subtitle A
Technology Administration	15, XI
Technology Policy, Assistant Secretary for	37, IV
Commercial Space Transportation	14, III
Commodity Credit Corporation	7, XIV
Commodity Futures Trading Commission	5, XLI; 17, I
Community Planning and Development, Office of Assistant Secretary for	24, V, VI
Community Services, Office of	45, X
Comptroller of the Currency	12, I
Construction Industry Collective Bargaining Commission	29, IX
Consumer Financial Protection Bureau	5, LXXXIV; 12, X
Consumer Product Safety Commission	5, LXXI; 16, II
Copyright Royalty Board	37, III
Corporation for National and Community Service	2, XXII; 45, XII, XXV
Cost Accounting Standards Board	48, 99
Council on Environmental Quality	40, V
Court Services and Offender Supervision Agency for the District of Columbia	5, LXX; 28, VIII
Customs and Border Protection	19, I

Agency	CFR Title, Subtitle or Chapter
Defense Contract Audit Agency	32, I
Defense Department	2, XI; 5, XXVI; 32, Subtitle A; 40, VII
Advanced Research Projects Agency	32, I
Air Force Department	32, VII
Army Department	32, V; 33, II; 36, III, 48, 51
Defense Acquisition Regulations System	48, 2
Defense Intelligence Agency	32, I
Defense Logistics Agency	32, I, XII; 48, 54
Engineers, Corps of	33, II; 36, III
National Imagery and Mapping Agency	32, I
Navy Department	32, VI; 48, 52
Secretary of Defense, Office of	2, XI; 32, I
Defense Contract Audit Agency	32, I
Defense Intelligence Agency	32, I
Defense Logistics Agency	32, XII; 48, 54
Defense Nuclear Facilities Safety Board	10, XVII
Delaware River Basin Commission	18, III
District of Columbia, Court Services and Offender Supervision Agency for the	5, LXX; 28, VIII
Drug Enforcement Administration	21, II
East-West Foreign Trade Board	15, XIII
Economic Analysis, Bureau of	15, VIII
Economic Development Administration	13, III
Economic Research Service	7, XXXVII
Education, Department of	2, XXXIV; 5, LIII
Bilingual Education and Minority Languages Affairs, Office of	34, V
Civil Rights, Office for	34, I
Educational Research and Improvement, Office of	34, VII
Elementary and Secondary Education, Office of	34, II
Federal Acquisition Regulation	48, 34
Postsecondary Education, Office of	34, VI
Secretary of Education, Office of	34, Subtitle A
Special Education and Rehabilitative Services, Office of	34, III
Vocational and Adult Education, Office of	34, IV
Educational Research and Improvement, Office of	34, VII
Election Assistance Commission	2, LVIII; 11, II
Elementary and Secondary Education, Office of	34, II
Emergency Oil and Gas Guaranteed Loan Board	13, V
Emergency Steel Guarantee Loan Board	13, IV
Employee Benefits Security Administration	29, XXV
Employees' Compensation Appeals Board	20, IV
Employees Loyalty Board	5, V
Employment and Training Administration	20, V
Employment Standards Administration	20, VI
Endangered Species Committee	50, IV
Energy, Department of	2, IX; 5, XXIII; 10, II, III, X
Federal Acquisition Regulation	48, 9
Federal Energy Regulatory Commission	5, XXIV; 18, I
Property Management Regulations	41, 109
Energy, Office of	7, XXIX
Engineers, Corps of	33, II; 36, III
Engraving and Printing, Bureau of	31, VI
Environmental Protection Agency	2, XV; 5, LIV; 40, I, IV, VII
Federal Acquisition Regulation	48, 15
Property Management Regulations	41, 115
Environmental Quality, Office of	7, XXXI
Equal Employment Opportunity Commission	5, LXII; 29, XIV
Equal Opportunity, Office of Assistant Secretary for	24, I
Executive Office of the President	3, I
Administration, Office of	5, XV
Environmental Quality, Council on	40, V
Management and Budget, Office of	2, Subtitle A; 5, III, LXXVII; 14, VI; 48, 99

Agency	CFR Title, Subtitle or Chapter
National Drug Control Policy, Office of	21, III
National Security Council	32, XXI; 47, 2
Presidential Documents	3
Science and Technology Policy, Office of	32, XXIV; 47, II
Trade Representative, Office of the United States	15, XX
Export-Import Bank of the United States	2, XXXV; 5, LII; 12, IV
Family Assistance, Office of	45, II
Farm Credit Administration	5, XXXI; 12, VI
Farm Credit System Insurance Corporation	5, XXX; 12, XIV
Farm Service Agency	7, VII, XVIII
Federal Acquisition Regulation	48, 1
Federal Aviation Administration	14, I
Commercial Space Transportation	14, III
Federal Claims Collection Standards	31, IX
Federal Communications Commission	5, XXIX; 47, I
Federal Contract Compliance Programs, Office of	41, 60
Federal Crop Insurance Corporation	7, IV
Federal Deposit Insurance Corporation	5, XXII; 12, III
Federal Election Commission	5, XXXVII; 11, I
Federal Emergency Management Agency	44, I
Federal Employees Group Life Insurance Federal Acquisition Regulation	48, 21
Federal Employees Health Benefits Acquisition Regulation	48, 16
Federal Energy Regulatory Commission	5, XXIV; 18, I
Federal Financial Institutions Examination Council	12, XI
Federal Financing Bank	12, VIII
Federal Highway Administration	23, I, II
Federal Home Loan Mortgage Corporation	1, IV
Federal Housing Enterprise Oversight Office	12, XVII
Federal Housing Finance Agency	5, LXXX; 12, XII
Federal Housing Finance Board	12, IX
Federal Labor Relations Authority	5, XIV, XLIX; 22, XIV
Federal Law Enforcement Training Center	31, VII
Federal Management Regulation	41, 102
Federal Maritime Commission	46, IV
Federal Mediation and Conciliation Service	29, XII
Federal Mine Safety and Health Review Commission	5, LXXIV; 29, XXVII
Federal Motor Carrier Safety Administration	49, III
Federal Prison Industries, Inc.	28, III
Federal Procurement Policy Office	48, 99
Federal Property Management Regulations	41, 101
Federal Railroad Administration	49, II
Federal Register, Administrative Committee of	1, I
Federal Register, Office of	1, II
Federal Reserve System	12, II
Board of Governors	5, LVIII
Federal Retirement Thrift Investment Board	5, VI, LXXVI
Federal Service Impasses Panel	5, XIV
Federal Trade Commission	5, XLVII; 16, I
Federal Transit Administration	49, VI
Federal Travel Regulation System	41, Subtitle F
Financial Crimes Enforcement Network	31, X
Financial Research Office	12, XVI
Financial Stability Oversight Council	12, XIII
Fine Arts, Commission on	45, XXI
Fiscal Service	31, II
Fish and Wildlife Service, United States	50, I, IV
Food and Drug Administration	21, I
Food and Nutrition Service	7, II
Food Safety and Inspection Service	9, III
Foreign Agricultural Service	7, XV
Foreign Assets Control, Office of	31, V
Foreign Claims Settlement Commission of the United States	45, V
Foreign Service Grievance Board	22, IX
Foreign Service Impasse Disputes Panel	22, XIV
Foreign Service Labor Relations Board	22, XIV
Foreign-Trade Zones Board	15, IV

Agency	CFR Title, Subtitle or Chapter
Forest Service	36, II
General Services Administration	5, LVII; 41, 105
Contract Appeals, Board of	48, 61
Federal Acquisition Regulation	48, 5
Federal Management Regulation	41, 102
Federal Property Management Regulations	41, 101
Federal Travel Regulation System	41, Subtitle F
General	41, 300
Payment From a Non-Federal Source for Travel Expenses	41, 304
Payment of Expenses Connected With the Death of Certain Employees	41, 303
Relocation Allowances	41, 302
Temporary Duty (TDY) Travel Allowances	41, 301
Geological Survey	30, IV
Government Accountability Office	4, I
Government Ethics, Office of	5, XVI
Government National Mortgage Association	24, III
Grain Inspection, Packers and Stockyards Administration	7, VIII; 9, II
Gulf Coast Ecosystem Restoration Council	40, VIII
Harry S. Truman Scholarship Foundation	45, XVIII
Health and Human Services, Department of	2, III; 5, XLV; 45, Subtitle A,
Centers for Medicare & Medicaid Services	42, IV
Child Support Enforcement, Office of	45, III
Children and Families, Administration for	45, II, III, IV, X
Community Services, Office of	45, X
Family Assistance, Office of	45, II
Federal Acquisition Regulation	48, 3
Food and Drug Administration	21, I
Human Development Services, Office of	45, XIII
Indian Health Service	25, V
Inspector General (Health Care), Office of	42, V
Public Health Service	42, I
Refugee Resettlement, Office of	45, IV
Homeland Security, Department of	2, XXX; 6, I; 8, I
Coast Guard	33, I; 46, I; 49, IV
Coast Guard (Great Lakes Pilotage)	46, III
Customs and Border Protection	19, I
Federal Emergency Management Agency	44, I
Human Resources Management and Labor Relations Systems	5, XCVII
Immigration and Customs Enforcement Bureau	19, IV
Transportation Security Administration	49, XII
HOPE for Homeowners Program, Board of Directors of	24, XXIV
Housing and Urban Development, Department of	2, XXIV; 5, LXV; 24, Subtitle B
Community Planning and Development, Office of Assistant Secretary for	24, V, VI
Equal Opportunity, Office of Assistant Secretary for	24, I
Federal Acquisition Regulation	48, 24
Federal Housing Enterprise Oversight, Office of	12, XVII
Government National Mortgage Association	24, III
Housing—Federal Housing Commissioner, Office of Assistant Secretary for	24, II, VIII, X, XX
Housing, Office of, and Multifamily Housing Assistance Restructuring, Office of	24, IV
Inspector General, Office of	24, XII
Public and Indian Housing, Office of Assistant Secretary for	24, IX
Secretary, Office of	24, Subtitle A, VII
Housing—Federal Housing Commissioner, Office of Assistant Secretary for	24, II, VIII, X, XX
Housing, Office of, and Multifamily Housing Assistance Restructuring, Office of	24, IV
Human Development Services, Office of	45, XIII
Immigration and Customs Enforcement Bureau	19, IV
Immigration Review, Executive Office for	8, V
Independent Counsel, Office of	28, VII

Agency	CFR Title, Subtitle or Chapter
Indian Affairs, Bureau of	25, I, V
Indian Affairs, Office of the Assistant Secretary	25, VI
Indian Arts and Crafts Board	25, II
Indian Health Service	25, V
Industry and Security, Bureau of	15, VII
Information Resources Management, Office of	7, XXVII
Information Security Oversight Office, National Archives and Records Administration	32, XX
Inspector General	
Agriculture Department	7, XXVI
Health and Human Services Department	42, V
Housing and Urban Development Department	24, XII, XV
Institute of Peace, United States	22, XVII
Inter-American Foundation	5, LXIII; 22, X
Interior Department	2, XIV
American Indians, Office of the Special Trustee	25, VII
Bureau of Ocean Energy Management, Regulation, and Enforcement	30, II
Endangered Species Committee	50, IV
Federal Acquisition Regulation	48, 14
Federal Property Management Regulations System	41, 114
Fish and Wildlife Service, United States	50, I, IV
Geological Survey	30, IV
Indian Affairs, Bureau of	25, I, V
Indian Affairs, Office of the Assistant Secretary	25, VI
Indian Arts and Crafts Board	25, II
Land Management, Bureau of	43, II
National Indian Gaming Commission	25, III
National Park Service	36, I
Natural Resource Revenue, Office of	30, XII
Ocean Energy Management, Bureau of	30, V
Reclamation, Bureau of	43, I
Secretary of the Interior, Office of	2, XIV; 43, Subtitle A
Surface Mining Reclamation and Enforcement, Office of	30, VII
Internal Revenue Service	26, I
International Boundary and Water Commission, United States and Mexico, United States Section	22, XI
International Development, United States Agency for	22, II
Federal Acquisition Regulation	48, 7
International Development Cooperation Agency, United States	22, XII
International Joint Commission, United States and Canada	22, IV
International Organizations Employees Loyalty Board	5, V
International Trade Administration	15, III; 19, III
International Trade Commission, United States	19, II
Interstate Commerce Commission	5, XL
Investment Security, Office of	31, VIII
James Madison Memorial Fellowship Foundation	45, XXIV
Japan–United States Friendship Commission	22, XVI
Joint Board for the Enrollment of Actuaries	20, VIII
Justice Department	2, XXVIII; 5, XXVIII; 28, I, XI; 40, IV
Alcohol, Tobacco, Firearms, and Explosives, Bureau of	27, II
Drug Enforcement Administration	21, II
Federal Acquisition Regulation	48, 28
Federal Claims Collection Standards	31, IX
Federal Prison Industries, Inc.	28, III
Foreign Claims Settlement Commission of the United States	45, V
Immigration Review, Executive Office for	8, V
Offices of Independent Counsel	28, VI
Prisons, Bureau of	28, V
Property Management Regulations	41, 128
Labor Department	5, XLII
Employee Benefits Security Administration	29, XXV
Employees' Compensation Appeals Board	20, IV
Employment and Training Administration	20, V

Agency	CFR Title, Subtitle or Chapter
Employment Standards Administration	20, VI
Federal Acquisition Regulation	48, 29
Federal Contract Compliance Programs, Office of	41, 60
Federal Procurement Regulations System	41, 50
Labor-Management Standards, Office of	29, II, IV
Mine Safety and Health Administration	30, I
Occupational Safety and Health Administration	29, XVII
Office of Workers' Compensation Programs	20, VII
Public Contracts	41, 50
Secretary of Labor, Office of	29, Subtitle A
Veterans' Employment and Training Service, Office of the Assistant Secretary for	41, 61; 20, IX
Wage and Hour Division	29, V
Workers' Compensation Programs, Office of	20, I
Labor-Management Standards, Office of	29, II, IV
Land Management, Bureau of	43, II
Legal Services Corporation	45, XVI
Library of Congress	36, VII
Copyright Royalty Board	37, III
U.S. Copyright Office	37, II
Local Television Loan Guarantee Board	7, XX
Management and Budget, Office of	5, III, LXXVII; 14, VI; 48, 99
Marine Mammal Commission	50, V
Maritime Administration	46, II
Merit Systems Protection Board	5, II, LXIV
Micronesian Status Negotiations, Office for	32, XXVII
Military Compensation and Retirement Modernization Commission	5, XCIX
Millennium Challenge Corporation	22, XIII
Mine Safety and Health Administration	30, I
Minority Business Development Agency	15, XIV
Miscellaneous Agencies	1, IV
Monetary Offices	31, I
Morris K. Udall Scholarship and Excellence in National Environmental Policy Foundation	36, XVI
Museum and Library Services, Institute of	2, XXXI
National Aeronautics and Space Administration	2, XVIII; 5, LIX; 14, V
Federal Acquisition Regulation	48, 18
National Agricultural Library	7, XLI
National Agricultural Statistics Service	7, XXXVI
National and Community Service, Corporation for	2, XXII; 45, XII, XXV
National Archives and Records Administration	2, XXVI; 5, LXVI; 36, XII
Information Security Oversight Office	32, XX
National Capital Planning Commission	1, IV
National Commission for Employment Policy	1, IV
National Commission on Libraries and Information Science	45, XVII
National Council on Disability	34, XII
National Counterintelligence Center	32, XVIII
National Credit Union Administration	5, LXXXVI; 12, VII
National Crime Prevention and Privacy Compact Council	28, IX
National Drug Control Policy, Office of	21, III
National Endowment for the Arts	2, XXXII
National Endowment for the Humanities	2, XXXIII
National Foundation on the Arts and the Humanities	45, XI
National Highway Traffic Safety Administration	23, II, III; 47, VI; 49, V
National Imagery and Mapping Agency	32, I
National Indian Gaming Commission	25, III
National Institute for Literacy	34, XI
National Institute of Food and Agriculture	7, XXXIV
National Institute of Standards and Technology	15, II
National Intelligence, Office of Director of	32, XVII
National Labor Relations Board	5, LXI; 29, I
National Marine Fisheries Service	50, II, IV
National Mediation Board	29, X
National Oceanic and Atmospheric Administration	15, IX; 50, II, III, IV, VI

Agency	CFR Title, Subtitle or Chapter
National Park Service	36, I
National Railroad Adjustment Board	29, III
National Railroad Passenger Corporation (AMTRAK)	49, VII
National Science Foundation	2, XXV; 5, XLIII; 45, VI
Federal Acquisition Regulation	48, 25
National Security Council	32, XXI
National Security Council and Office of Science and Technology Policy	47, II
National Telecommunications and Information Administration	15, XXIII; 47, III, IV
National Transportation Safety Board	49, VIII
Natural Resources Conservation Service	7, VI
Natural Resource Revenue, Office of	30, XII
Navajo and Hopi Indian Relocation, Office of	25, IV
Navy Department	32, VI
Federal Acquisition Regulation	48, 52
Neighborhood Reinvestment Corporation	24, XXV
Northeast Interstate Low-Level Radioactive Waste Commission	10, XVIII
Nuclear Regulatory Commission	2, XX; 5, XLVIII; 10, I
Federal Acquisition Regulation	48, 20
Occupational Safety and Health Administration	29, XVII
Occupational Safety and Health Review Commission	29, XX
Ocean Energy Management, Bureau of	30, V
Offices of Independent Counsel	28, VI
Office of Workers' Compensation Programs	20, VII
Oklahoma City National Memorial Trust	36, XV
Operations Office	7, XXVIII
Overseas Private Investment Corporation	5, XXXIII; 22, VII
Patent and Trademark Office, United States	37, I
Payment From a Non-Federal Source for Travel Expenses	41, 304
Payment of Expenses Connected With the Death of Certain Employees	41, 303
Peace Corps	2, XXXVII; 22, III
Pennsylvania Avenue Development Corporation	36, IX
Pension Benefit Guaranty Corporation	29, XL
Personnel Management, Office of	5, I, XXXV; 45, VIII
Human Resources Management and Labor Relations Systems, Department of Homeland Security	5, XCVII
Federal Acquisition Regulation	48, 17
Federal Employees Group Life Insurance Federal Acquisition Regulation	48, 21
Federal Employees Health Benefits Acquisition Regulation	48, 16
Pipeline and Hazardous Materials Safety Administration	49, I
Postal Regulatory Commission	5, XLVI; 39, III
Postal Service, United States	5, LX; 39, I
Postsecondary Education, Office of	34, VI
President's Commission on White House Fellowships	1, IV
Presidential Documents	3
Presidio Trust	36, X
Prisons, Bureau of	28, V
Privacy and Civil Liberties Oversight Board	6, X
Procurement and Property Management, Office of	7, XXXII
Productivity, Technology and Innovation, Assistant Secretary	37, IV
Public Contracts, Department of Labor	41, 50
Public and Indian Housing, Office of Assistant Secretary for	24, IX
Public Health Service	42, I
Railroad Retirement Board	20, II
Reclamation, Bureau of	43, I
Recovery Accountability and Transparency Board	4, II
Refugee Resettlement, Office of	45, IV
Relocation Allowances	41, 302
Research and Innovative Technology Administration	49, XI
Rural Business-Cooperative Service	7, XVIII, XLII, L
Rural Development Administration	7, XLII
Rural Housing Service	7, XVIII, XXXV, L

Agency	CFR Title, Subtitle or Chapter
Rural Telephone Bank	7, XVI
Rural Utilities Service	7, XVII, XVIII, XLII, L
Saint Lawrence Seaway Development Corporation	33, IV
Science and Technology Policy, Office of	32, XXIV
Science and Technology Policy, Office of, and National Security Council	47, II
Secret Service	31, IV
Securities and Exchange Commission	5, XXXIV; 17, II
Selective Service System	32, XVI
Small Business Administration	2, XXVII; 13, I
Smithsonian Institution	36, V
Social Security Administration	2, XXIII; 20, III; 48, 23
Soldiers' and Airmen's Home, United States	5, XI
Special Counsel, Office of	5, VIII
Special Education and Rehabilitative Services, Office of	34, III
State Department	2, VI; 22, I; 28, XI
Federal Acquisition Regulation	48, 6
Surface Mining Reclamation and Enforcement, Office of	30, VII
Surface Transportation Board	49, X
Susquehanna River Basin Commission	18, VIII
Technology Administration	15, XI
Technology Policy, Assistant Secretary for	37, IV
Tennessee Valley Authority	5, LXIX; 18, XIII
Thrift Supervision Office, Department of the Treasury	12, V
Trade Representative, United States, Office of	15, XX
Transportation, Department of	2, XII; 5, L
Commercial Space Transportation	14, III
Contract Appeals, Board of	48, 63
Emergency Management and Assistance	44, IV
Federal Acquisition Regulation	48, 12
Federal Aviation Administration	14, I
Federal Highway Administration	23, I, II
Federal Motor Carrier Safety Administration	49, III
Federal Railroad Administration	49, II
Federal Transit Administration	49, VI
Maritime Administration	46, II
National Highway Traffic Safety Administration	23, II, III; 47, IV; 49, V
Pipeline and Hazardous Materials Safety Administration	49, I
Saint Lawrence Seaway Development Corporation	33, IV
Secretary of Transportation, Office of	14, II; 49, Subtitle A
Surface Transportation Board	49, X
Transportation Statistics Bureau	49, XI
Transportation, Office of	7, XXXIII
Transportation Security Administration	49, XII
Transportation Statistics Bureau	49, XI
Travel Allowances, Temporary Duty (TDY)	41, 301
Treasury Department	5, XXI; 12, XV; 17, IV; 31, IX
Alcohol and Tobacco Tax and Trade Bureau	27, I
Community Development Financial Institutions Fund	12, XVIII
Comptroller of the Currency	12, I
Customs and Border Protection	19, I
Engraving and Printing, Bureau of	31, VI
Federal Acquisition Regulation	48, 10
Federal Claims Collection Standards	31, IX
Federal Law Enforcement Training Center	31, VII
Financial Crimes Enforcement Network	31, X
Fiscal Service	31, II
Foreign Assets Control, Office of	31, V
Internal Revenue Service	26, I
Investment Security, Office of	31, VIII
Monetary Offices	31, I
Secret Service	31, IV
Secretary of the Treasury, Office of	31, Subtitle A
Thrift Supervision, Office of	12, V
Truman, Harry S. Scholarship Foundation	45, XVIII
United States and Canada, International Joint Commission	22, IV

Agency	CFR Title, Subtitle or Chapter
United States and Mexico, International Boundary and Water Commission, United States Section	22, XI
U.S. Copyright Office	37, II
Utah Reclamation Mitigation and Conservation Commission	43, III
Veterans Affairs Department	2, VIII; 38, I
Federal Acquisition Regulation	48, 8
Veterans' Employment and Training Service, Office of the Assistant Secretary for	41, 61; 20, IX
Vice President of the United States, Office of	32, XXVIII
Vocational and Adult Education, Office of	34, IV
Wage and Hour Division	29, V
Water Resources Council	18, VI
Workers' Compensation Programs, Office of	20, I
World Agricultural Outlook Board	7, XXXVIII

List of CFR Sections Affected

All changes in this volume of the Code of Federal Regulations (CFR) that were made by documents published in the FEDERAL REGISTER since January 1, 2009 are enumerated in the following list. Entries indicate the nature of the changes effected. Page numbers refer to FEDERAL REGISTER pages. The user should consult the entries for chapters, parts and subparts as well as sections for revisions.

For changes to this volume of the CFR prior to this listing, consult the annual edition of the monthly List of CFR Sections Affected (LSA). The LSA is available at *www.fdsys.gov*. For changes to this volume of the CFR prior to 2001, see the ''List of CFR Sections Affected, 1949–1963, 1964–1972, 1973–1985, and 1986–2000'' published in 11 separate volumes. The ''List of CFR Sections Affected 1986–2000'' is available at *www.fdsys.gov*.

2009

49 CFR

74 FR Page

Chapter I

178.33b Added 2268
178.33b–1 Added 2268
178.33b–2 Added 2268
178.33b–3 Added 2268
178.33b–4 Added 2268
178.33b–5 Added 2268
178.33b–6 Added 2268
178.33b–7 Added 2268
178.33b–8 Added 2268
178.33b–9 Added 2268
178.68 (l)(2) revised 16143
178.345–3 (a)(3) amended 16143
178.345–5 (f) revised 16144
178.502 (d) revised; note added 2269
178.703 (a)(1)(vii) revised 2269
178.801 (f)(1)(i) revised 2269
178.810 (e) revised 2269
179.8 Added 1801
179.13 Revised 1802
179.22 (e) added 1802
179.100–3 (b) added 1802
179.102–3 Added 1802
179.102–17 (m) added 1802
180.209 (a)(1) introductory text revised 53189
180.407 (d)(3) and (g)(1)(ii)(A) revised 16144
(h)(2) revised 53189
180.605 (h) heading revised 53189
190.3 Amended 62505
190.5 Regulation at 73 FR 16567 confirmed 2893

49 CFR—Continued

74 FR Page

Chapter I—Continued

190.9 Regulation at 73 FR 16566 confirmed 2893
190.11 Regulation at 73 FR 16566 and 16567 confirmed 2893
190.209 Regulation at 73 FR 16567 confirmed 2893
190.227 Regulation at 73 FR 16567 confirmed 2893
190.239 Regulation at 73 FR 16567 confirmed; (a), (b)(1) and (2) amended 2893
190.305 Regulation at 73 FR 16566 and 16568 confirmed 2893
190.309 Regulation at 73 FR 16566 confirmed 2893
190.341 Regulation at 73 FR 16568 confirmed; (c)(7) and (8) amended; (c)(9) added; (h)(1)(v) revised 2893
191.7 Regulation at 73 FR 16570 confirmed 2893
Amended 2894
191.27 Regulation at 73 FR 16570 confirmed 2893
(b) amended 2894
192 Authority citation revised 62505, 63326
192.3 Amended 63326
192.7 Regulation at 73 FR 16570 confirmed 2893
(b) amended 2894
(b) and (c)(2) table amended 63327
(c)(2) table amended 17101

49 CFR—Continued

74 FR Page

Chapter I—Continued
Regulation at 74 FR 17101 confirmed....30476
192.112 (c)(2)(i) and (e)(2) revised....62505
192.121 Revised....62505
192.383 Revised....63934
Regulation at 74 FR 63934 comment period extended....69286
192.605 (b)(12) added....63327
192.615 (a)(11) added....63327
192.620 (a)(1)(i), (2)(ii), (b)(3), (7), (c)(4)(ii), (6), (d)(3)(i), (5)(iv), (7)(iii), (iv)(C), (8)(ii), (9)(i) introductory text, (ii), (10)(ii), (iii), (11)(ii)(A), (iii) introductory text and (iv) revised....62505
192.631 Added....63327
192.727 Regulation at 73 FR 16570 confirmed....2893
(g)(1) amended....2894
192.949 Regulation at 73 FR 16570 confirmed....2893
(a) amended....2894
192.951 Regulation at 73 FR 16570 confirmed....2893
(a) amended....2894
192.1001—192.1015 (Subpart P) Added....63934
Regulation at 74 FR 63934 comment period extended....69286
193.2013 Regulation at 73 FR 16570 confirmed....2893
(b) amended....2894
194.119 Regulation at 73 FR 16570 confirmed....2893
(a) amended....2894
195 Authority citation revised....62506, 63328
195.2 Amended....63328
195.3 Regulation at 73 FR 16570 confirmed....2893
(b) amended....2894
(b) and (c) table amended....63328
(c) table amended....17101
Regulation at 74 FR 17101 confirmed....30476
195.12 Second (d) redesignated as (e)....62506
195.52 (b) amended....2894
195.57 Regulation at 73 FR 16570 confirmed....2893
(b) amended....2894
195.58 Amended....2894
195.59 Regulation at 73 FR 16570 confirmed....2893
(a) amended....2894

49 CFR—Continued

74 FR Page

Chapter I—Continued
195.62 Amended....2894
195.402 (c)(15) and (e)(10) added....63329
195.446 Added....63329
195.452 Regulation at 73 FR 16571 confirmed....2893
198.11 Revised....62506
199.7 (a) amended....2894
199.119 Regulation at 73 FR 16571 confirmed....2893
199.229 Regulation at 73 FR 16571 confirmed....2893
(c) amended....2895

2010

49 CFR

75 FR Page

Chapter I
178.2 (c) revised....5395
(c)(1)(ii) revised....60339
178.33b Heading correctly revised....73
178.33b–7 Correctly revised....73
178.33b–8 Heading correctly revised; (b) correctly removed....74
178.503 (a)(1) and (e)(1) revised....5395
(e)(1)(ii)(D) revised....60339
178.601 (g)(1) introductory text, (8) and (k) revised....5396
(g)(8)(xiii)(C) and (D) revised....60339
178.700 (c)(1) revised....5396
178.703 (a)(1)(vii) correctly revised; (b)(7) correctly added....74
(a)(1)(i) revised....5396
178.705 (d) added....5396
178.706 (d) added....5396
178.707 (d) added....5396
178.708 (d) added....5396
178.709 (d) added....5397
178.710 (d) added....5397
178.801 (i) revised....5397
178.810 (c) revised....5397
178.815 Revised....5397
178.819 (b)(1) amended; (b)(2) revised....5397
178.900—178.940 (Subpart P) Added....5397
178.910 (a)(1)(ii) revised....60339
178.915 (e) revised....60339
178.930 (a) introductory text corrected....60339
178.950—178.985 (Subpart Q) Added....5400
178.955 (c)(5)(ii) revised....60339
178.965 (a) and (b) revised; (c) amended....60339
178.980 (d)(1) revised....60339

49 CFR—Continued

75 FR Page

Chapter I—Continued

178.985 (a) revised 60340
179.13 Revised 27216
179 Appendix B amended 53597
180.205 (g)(6) revised 53597
180.213 (d)(2) revised 53597
191.1 (b)(4) revised 72904
191.3 Amended 72905
191.5 Heading and (b) introductory text revised 72905
191.7 Revised 72905
191.9 (c) revised 72905
191.11 Revised 72905
191.15 Revised 72905
191.17 Revised 72905
191.19 Removed 72905
191.21 Revised 72905
191.22 Added 72906
192.3 Amended 48601
192.7 (c)(2) revised 48601
192.63 (a)(1) revised 48603
192.65 Revised 48603
192.121 Amended 48603
192.123 (e) introductory text, (1) and (2) revised 48603
192.145 (d) introductory text amended; (e) revised 48603
192.191 Revised 48603
192.281 (a) and (b) revised 48603
192.283 (a) revised 48603
192.383 (a) and (b) corrected 5244
192.465 (e) revised 48603
192.631 (a)(2) correctly amended 5537
192.711 Revised 48604
192.923 (b)(1) amended 48604
192.925 (b) introductory text, (1), (ii), (2) introductory text, (3) introductory text, (ii), (iv), (4) introductory text and (ii) amended 48604
192.931 (d) amended 48604
192.935 (b)(1)(iv) amended 48604
192.939 (a)(2) amended 48604
192.945 (a) revised 72906
192.951 Revised 72906
192 Appendix B amended 48604
193.2011 Revised 72906
193.2013 (c) revised 48604
193.2057 (a) revised 48604
193.2067 (b)(1) revised 48604
193.2101 Revised 48604
193.2321 Revised 48605
195.3 (c) revised 48605
195.48 Revised 72906
195.49 Revised 72907
195.52 Revised 72907

49 CFR—Continued

75 FR Page

Chapter I—Continued

195.54 (a) revised 72907
195.58 Revised 72907
195.62 Removed 72907
195.63 Revised 72907
195.64 Added 72907
195.116 (d) revised 48606
195.207 Added 48606
195.264 (e) revised 48606
195.307 (a) and (c) revised 48607
195.401 (b) revised 48607
195.432 (b) revised 48607
195.446 (a) correctly amended 5537
195.452 (h)(4)(i) introductory text revised 48607
195.571 Revised 48607
195.573 (a)(2) revised 48607
195.588 (b)(1), (2) introductory text, (iii), (3) introductory text, (4) introductory text, (ii), (iv), (5) introductory text and (ii) revised 48607
195 Appendix C amended 48608

2011

49 CFR

76 FR Page

Chapter I

178 Policy statement 37661
178.35 (c)(4) and (g) revised; (h) removed 43531
178.37 (j) and (l) revised 43531
178.71 Revised 3385
(c) and (p)(6) revised 43532
178.275 (h) revised 3388
178.320 (a) amended 43532
178.345–1 (i)(2) revised 43532
178.347–1 (d)(9) revised 3388
(c) and (d) introductory text revised 43532
178.347–4 (b) revised 43532
178.601 (l) correctly reinstated; CFR correction 30551
178.603 (f)(4) revised 3389
178.703 (a)(1)(viii) revised 3389
178.955 (c)(6) and (7) added 3389
179 Policy statement 4250
180 Policy statement 37661
180.207 (c) Table 1 amended 3389
180.350 (b) amended 3389
180.417 (b)(1)(v) revised 43532
190 Policy statement 40820
191 Policy statement 28326
191.12 Added 5499
192 Policy statement 28326
192.383 (c) revised 5499
192.631 (a)(2) amended 35135

49 CFR—Continued

76 FR
Page

Chapter I—Continued
192.1001 Amended 5499
192.1007 (b) amended 5499
192.1009 Revised 5499
193 Policy statement 28326
195 Policy statement 28326
195.1 Revised 25586
195.12 Revised 25587
(c)(3)(i) corrected 43605
195.48 Revised 25588
195.446 (a) amended 35135

2012

49 CFR

77 FR
Page

Chapter I
178.46 (k)(2) revised 60943
178.70 (e)(5) amended 60943
178.71 (g)(1), (2) and (k)(1)(i) revised 60943
178.75 (d)(3)(i) and (ii) revised 60943
178.503 (d) introductory text and (e) revised 60943
178.601 (c)(4)(v) revised 60944
179 Authority citation revised 60945
179.13 (b) revised 37985
179.24 Added 37985
179.100–20 (b) added 37985
179.200–24 (c) added 37985
179.201–10 (b) added 37985
179.220–25 Introductory text redesignated as (a); (b) added 37986
179.300–13 (b) revised 37986
179 Appendix B amended 60945
180.501 (a) revised; (b) redesignated as (c); new (b) and (d) added 37986
180.503 Revised 37986
180.507 (b)(2) removed 37987
180.509 (k) and (l) redesignated as (l) and (m); (f)(3) through (6), (i)(2), (3) and new (k) added; (a), (b), (c)(3), (d) through (j) and new (l) revised 37987
180.511 Introductory text, (d) and (g) revised; (h) added 37990
180.513 Revised 37990
180.515 (a), (b) and (c) revised 37991
180.517 (a) and (b) revised 37991
180 Appendix D added 37991
191 Policy statement 16471
192 Policy statement 16471
193 Policy statement 16471
195 Policy statement 16471
199 Policy statement 10666

2013

49 CFR

78 FR
Page

Chapter I
178 Authority citation revised 60754
178 Technical correction 17874
178.2 (c)(1)(ii) revised 1118
(c)(1) introductory text revised 15328
178.3 (a)(2) revised 14714
178.61 (b)(2) revised 60754
178.68 (i)(2) correctly reinstated; (l)(1) correctly revised; CFR correction 44894
178.71 (d)(2) revised 1096
178.274 (f)(1)(v) amended; (f)(1)(vi) redesignated as (f)(1)(vii); new (f)(1)(vi) added 1096
178.345-3 (c)(1) introductory text revised 60755
178.503 (a)(1) revised 60755
178.512 Heading, (a) and (b) introductory text revised 1096
178.601 (c)(4)(v) revised 1118
(l) revised 14715
(l) introductory text, (1) and (2) introductory text revised 65487
178.603 (a) table amended; (b) revised 1097
178.605 (d) revised 60755
178.705 (a)(3) revised 1097
178.801 (l) revised 14715, 65487
178.910 (a)(1) introductory text revised; (b) added 1097
178.955 (i) revised 14715
(i) introductory text, (1) and (2) introductory text revised 65487
178.980 (e)(2) and (3) redesignated as (e)(3) and (4); new (e)(2) added 1097
178.1000—178.1020 (Subpart R) Added 1097
178.1030—178.1070 (Subpart S) Added 1098
178 Appendix E Figures 1 and 2 added 15328
179 Authority citation revised 60755
180 Authority citation revised 60755
180.416 (d)(5) revised 15330
190 Authority citation and heading revised; section amended; eff. 10-25-13 58908
Heading and authority citation revised; nomenclature changes 58908
190.1 (a) amended; eff. 10-25-13 58908
190.3 Amended; eff. 10-25-13 58908
190.5 (a) and (c) revised; eff. 10-25-13 58909

49 CFR—Continued

78 FR Page

Chapter I—Continued

190.7 (a), (c), (d) and (e) revised; eff. 10-25-13 58909
190.11 Revised; eff. 10-25-13 58909
190.201 (a) revised; eff. 10-25-13 58909
190.203 (b)(6), (c), (e) and (f) revised; eff. 10-25-13 58909
190.205 Revised; eff. 10-25-13 58909
190.206 Added; eff. 10-25-13 58910
190.207 (a), (b)(2) and (c) revised; eff. 10-25-13 58910
190.208 Added; eff. 10-25-13 58910
190.209 Revised; eff. 10-25-13 58910
190.210 Added; eff. 10-25-13 58911
190.211 Revised; eff. 10-25-13 58911
190.212 Added; eff. 10-25-13 58911
190.213 Revised; eff. 10-25-13 58911
190.215 Removed; eff. 10-25-13 58912
190.217 Revised; eff. 10-25-13 58912
190.219 (a) revised; (c) added; eff. 10-25-13 58912
190.221 Revised; eff. 10-25-13 58912
190.223 Revised; eff. 10-25-13 58912
190.225 Revised; eff. 10-25-13 58912
190.227 (a) revised; eff. 10-25-13 58912
190.229 Removed; eff. 10-25-13 58912
190.231 Removed; eff. 10-25-13 58912
190.233 (a), (b), (c), (f)(1) and (g) revised; eff. 10-25-13 58912
190.237 Removed; eff. 10-25-13 58913
190.239 (a)–(f) headings revised; (g) added; eff. 10-25-13 58913
190.201—190.239 (Subpart B) Undesignated center heading removed; eff. 10-25-13 58912
190.241 Added; eff. 10-25-13 58913
190.243 Added; eff. 10-25-13 58913
190.291—190.293 (Subpart C) new Subpart C added; eff. 10-25-13 58914
190.319 Revised; eff. 10-25-13 58914
190.321 Revised; eff. 10-25-13 58914
190.327 (b) revised; eff. 10-25-13 58914
190.335 (a) revised; eff. 10-25-13 58914
190.338 (c) removed; (d) redesignated as new (c); eff. 10-25-13 58914

49 CFR—Continued

78 FR Page

Chapter I—Continued

190.341 (a)–(j) headings revised; (k) added; eff. 10-25-13 58914
190.301—190.341 (Subpart C) Redesignated Subpart D; eff. 10-25-13 58914
192 Policy statement 42889
192.603 (c) revised; eff. 10-25-13 58915
193.2017 (b) revised; eff. 10-25-13 58915
195.2 Correctly amended; CFR correction 46292
195.402 (b) revised; eff. 10-25-13 58915
199.101 (b) revised; eff. 10-25-13 58915

2014

(Regulations published from January 1, 2014, through October 1, 2014)

49 CFR

79 FR Page

Chapter I

178 Policy statement 55403
178.350 (c) revised 40618
178.356 Removed 40618
178.356-1 Removed 40618
178.356-2 Removed 40618
178.356-3 Removed 40618
178.356-4 Removed 40618
178.356-5 Removed 40618
178.356-6 Removed 40618
178.358 Removed 40618
178.358-1 Removed 40618
178.358-2 Removed 40618
178.358-3 Removed 40618
178.358-4 Removed 40618
178.358-5 Removed 40618
178.358-6 Removed 40618
178.360 Removed 40618
178.360-1 Removed 40618
178.360-2 Removed 40618
178.360-3 Removed 40618
178.360-4 Removed 40618
178.516 (b)(7) added 15046
178.521 (b)(4) added 15046
179 Policy statement 55403
180 Policy statement 55403