AUTHENTICATED
U.S. GOVERNMENT
INFORMATION
GPO

(b) A 30–day delay in effective date for implementing observer coverage will follow the annual notification, except for those fisheries that were included in a previous determination within the preceding five years or where the AA has determined that there is good cause pursuant to the Administrative Procedure Act to make the rule effective without a 30–day delay.

§ 222.404 Observer program sampling.

(a) During the program design, NMFS would be guided by the following standards in the distribution and placement of observers among fisheries and vessels in a particular fishery:

(1) The requirements to obtain the best available scientific information;

(2) The requirement that assignment of observers is fair and equitable among fisheries and among vessels in a fishery;

(3) The requirement that no individual person or vessel, or group of persons or vessels, be subject to inappropriate, excessive observer coverage; and

(4) The need to minimize costs and avoid duplication, where practicable.

(b) Consistent with 16 U.S.C. 1881(b), vessels where the facilities for accommodating an observer or carrying out observer functions are so inadequate or unsafe (due to size or quality of equipment, for example) that the health or safety of the observer or the safe operation of the vessel would be jeopardized, would not be required to take observers under this rule.

PART 223—THREATENED MARINE AND ANADROMOUS SPECIES

Subpart A—General Provisions

Sec.

223.101 Purpose and scope.
223.102 Enumeration of threatened marine and anadromous species.

Subpart B—Restrictions Applicable to Threatened Marine and Anadromous Species

223.201 Guadalupe fur seal.
223.202 [Reserved]
223.203 Anadromous fish.
223.204 Tribal plans.
223.205 Sea turtles.
223.206 Exceptions to prohibitions relating to sea turtles.
223.207 Approved TEDs.
223.208 Corals.
223.209 [Reserved]
223.210 Green sturgeon.
223.211 Atlantic sturgeon.
223.212 Southern DPS of spotted seal.
223.213–223.300 [Reserved]
223.301 Special rules—marine and anadromous fishes.

FIGURES 1–2 TO PART 223 [RESERVED]
FIGURE 3 TO PART 223—MATAGORDA TED
FIGURE 4 TO PART 223—GEORGIA TED
FIGURE 5 TO PART 223—NET DIAGRAM FOR THE EXCLUDER PANEL OF THE PARKER SOFT TED
FIGURE 6 TO PART 223—TED EXTENSION IN SUMMER FLOUNDER TRAWL
FIGURES 7–9b TO PART 223 [RESERVED]
FIGURE 10 TO PART 223—FLOUNDER TED
FIGURE 11 TO PART 223—MODIFIED FLOUNDER TED
FIGURE 12 TO PART 223—ESCAPE OPENING & COVER DIMENSIONS FOR 71-INCH TED
FIGURE 13 TO PART 223—SINGLE GRID HARD TED ESCAPE OPENING
FIGURE 14a TO PART 223—MAXIMUM ANGLE OF DEFLECTOR BARS WITH STRAIGHT BARS ATTACHED TO THE BOTTOM OF THE FRAME
FIGURE 14b TO PART 223—MAXIMUM ANGLE OF DEFLECTOR BARS WITH BENT BARS ATTACHED TO THE BOTTOM OF THE FRAME
FIGURE 15 TO PART 223—WEEDLESS TED BRACE BAR DESCRIPTION
FIGURE 16 TO PART 223—ESCAPE OPENING AND FLAP DIMENSIONS FOR THE DOUBLE COVER FLAP TED
FIGURE 17 TO PART 223—BOONE WEDGE CUT ESCAPE OPENING
FIGURES 18a, 18b AND 18c TO PART 223—LARGE FRAME TED ESCAPE OPENING; MINIMUM DIMENSIONS USING ALL-BAR CUTS (TRIANGULAR CUTS); LARGE FRAME TED ESCAPE OPENING; MINIMUM DIMENSIONS USING ALL-BAR CUTS AND LEADING EDGE CUT; LARGE FRAME TED ESCAPE OPENING; MINIMUM DIMENSIONS USING ALL-POINTS SIDE CUTS (RECTANGULAR CUT)
FIGURES 19a AND 19b TO PART 223—CHAUVIN SHRIMP DEFLECTOR INSTALLATION DETAILS

AUTHORITY: 16 U.S.C. 1531 1543; subpart B, § 223.201–202 also issued under 16 U.S.C. 1361 *et seq.;* 16 U.S.C. 5503(d) for § 223.206(d)(9).

SOURCE: 43 FR 32809, July 28, 1978, unless otherwise noted. Redesignated at 64 FR 14068, Mar. 23, 1999.

Subpart A—General Provisions

§ 223.101 Purpose and scope.

(a) The regulations contained in this part identify the species under the jurisdiction of the Secretary of Commerce that have been determined to be threatened species pursuant to section 4(a) of the Act, and provide for the conservation of such species by establishing rules and procedures to govern activities involving the species.

(b) The regulations contained in this part apply only to the threatened species enumerated in § 223.102.

(c) The provisions of this part are in addition to, and not in lieu of, other regulations of parts 222 through 226 of this chapter which prescribe additional restrictions or conditions governing threatened species.

[64 FR 14068, Mar. 23, 1999, as amended at 79 FR 20806, Apr. 14, 2014]

§ 223.102 Enumeration of threatened marine and anadromous species.

(a) The table below identifies the species under the jurisdiction of the Secretary of Commerce that have been determined to be threatened pursuant to section 4(a) of the Act, species treated as threatened because they are sufficiently similar in appearance to threatened species, and experimental populations of threatened species.

(b) The columns entitled ''Common name,'' ''Scientific name,'' and ''Description of listed entity'' define the species within the meaning of the Act. In the ''Common name'' column, experimental populations are identified as ''XE'' for essential populations or ''XN'' for nonessential populations. Species listed based on similarity of appearance are identified as ''S/A.'' Although a column for ''Common name'' is included, common names cannot be relied upon for identification of any specimen, because they may vary greatly in local usage. The ''Scientific name'' column provides the most recently accepted scientific name, relying to the extent practicable on the *International Code of Zoological Nomenclature*. In cases in which confusion might arise, a synonym(s) will be provided in parentheses. The ''Description of listed entity'' column identifies whether the listed entity comprises the entire species, a subspecies, or a distinct population segment (DPS) and provides a description for any DPSs. Unless otherwise indicated in the ''Description of listed entity'' column, all individual members of the listed entity and their progeny retain their listing status wherever found, including individuals in captivity. Information regarding the general range of the species, subspecies, or DPS may be found in the FEDERAL REGISTER notice(s) cited in the ''Citation(s) for listing determination(s)'' column.

(c) The ''Citation(s) for listing determination(s)'' column provides reference to the FEDERAL REGISTER notice(s) determining the species' status under the Act. The abbreviation ''(SPR)'' (significant portion of its range) after a citation indicates that the species was listed based on its status in a significant portion of its range. If a citation does not include the ''(SPR)'' notation, it means that the species was listed based on its status throughout its entire range. For ''(SPR)'' listings, a geographical description of the SPR may be found in the referenced FEDERAL REGISTER notice. The ''(SPR)'' notation serves an informational purpose only and does not imply any limitation on the application of the prohibitions or restrictions of the Act or implementing rules.

(d) The ''Critical habitat'' and ''ESA rules'' columns provide cross-references to other sections in this part and part 226. The term ''NA'' appearing in the ''Critical habitat'' column indicates that there are no critical habitat designations for that species; similarly, the term ''NA'' appearing in the ''ESA rules'' column indicates that there are no ESA rules for that species. However, all other applicable rules in parts 222 through 226 and part 402 still apply to that species. Also, there may be other rules in this title that relate to such wildlife. The ''ESA rules'' column is not intended to list all Federal, state, tribal, or local governmental regulations that may apply to the species.

(e) The threatened species under the jurisdiction of the Secretary of Commerce are:

Species [1]			Citation(s) for listing determination(s)	Critical habitat	ESA rules
Common name	Scientific name	Description of listed entity			
Marine Mammals					
Seal, bearded (Beringia DPS).	*Erignathus barbatus nauticus*	Bearded seals originating from breeding areas in the Arctic Ocean and adjacent seas in the Pacific Ocean between 145° E. Long. (Novosibirskiye) and 130° W. Long., and east of 157° E. Long. or east of the Kamchatka Peninsula	77 FR 76740, Dec 28, 2012	NA	NA.
Seal, bearded (Okhotsk DPS).	*Erignathus barbatus nauticus*	Bearded seals originating from breeding areas in the Pacific Ocean west of 157° E. Long. or west of the Kamchatka Peninsula	77 FR 76740, Dec 28, 2012	NA	NA.
Seal, Guadalupe fur.	*Arctocephalus townsendi*	Entire species	50 FR 51252, Dec 16, 1985	NA	223.201.
Seal, ringed (Arctic subspecies).	*Phoca (=Pusa) hispida hispida*	Entire subspecies	77 FR 76706, Dec 28, 2012	NA	NA.
Seal, ringed (Baltic subspecies).	*Phoca (=Pusa) hispida botnica*	Entire subspecies	77 FR 76706, Dec 28, 2012	NA	NA.
Seal, ringed (Okhotsk subspecies).	*Phoca (=Pusa) hispida ochotensis*	Entire subspecies	77 FR 76706, Dec 28, 2012	NA	NA.
Seal, spotted (Southern DPS).	*Phoca largha*	Spotted seals originating from breeding areas in the Pacific Ocean south of 43° N. Lat	75 FR 65239, Oct 22, 2010	NA	223.212.
Sea Turtles [2]					
Sea turtle, green	*Chelonia mydas*	Entire species, except when listed as endangered under § 224.101	43 FR 32800, Jul 28, 1978	226.208	223.205, 223.206, 223.207.
Sea turtle, loggerhead (Northwest Atlantic Ocean DPS).	*Caretta caretta*	Loggerhead sea turtles originating from the Northwest Atlantic Ocean west of 40° W. Long	76 FR 58868, Sep 22, 2011	NA	223.205, 223.206, 223.207.
Sea turtle, loggerhead (South Atlantic Ocean DPS).	*Caretta caretta*	Loggerhead sea turtles originating from the South Atlantic Ocean west of 20° E. Long. and east of 67° W. Long	76 FR 58868, Sep 22, 2011	NA	223.205, 223.206, 223.207.
Sea turtle, loggerhead (Southeast Indo-Pacific Ocean DPS).	*Caretta caretta*	Loggerhead sea turtles originating from the Southeast Indian Ocean east of 80° E. Long. and from the South Pacific Ocean west of 141° E. Long	76 FR 58868, Sep 22, 2011	NA	223.205, 223.206, 223.207.
Sea turtle, loggerhead (Southwest Indian Ocean DPS).	*Caretta caretta*	Loggerhead sea turtles originating from the Southwest Indian Ocean west of 80° E. Long. and east of 20° E. Long	76 FR 58868, Sep 22, 2011	NA	223.205, 223.206, 223.207.

Species [1]			Citation(s) for listing determination(s)	Critical habitat	ESA rules
Common name	Scientific name	Description of listed entity			
Sea turtle, olive ridley.	*Lepidochelys olivacea*	Entire species, except when listed as endangered under § 224.101	43 FR 32800, Jul 28, 1978	NA	223.205, 223.206, 223.207.
Fishes					
Eulachon (Southern DPS).	*Thaleichthys pacificus*	Eulachon originating from the Skeena River in British Columbia south to and including the Mad River in northern California	75 FR 13012, Mar 18, 2010	226.222	NA.
Rockfish, canary (Puget Sound/Georgia Basin DPS).	*Sebastes pinniger*	Canary rockfish originating from Puget Sound and the Georgia Basin	75 FR 22276, Apr 28, 2010	NA	NA.
Rockfish, yelloweye (Puget Sound/Georgia Basin DPS).	*Sebastes ruberrimus*	Yelloweye rockfish originating from Puget Sound and the Georgia Basin	75 FR 22276, Apr 28, 2010	NA	NA.
Salmon, Chinook (California Coastal ESU).	*Oncorhynchus tshawytscha*	Naturally spawned Chinook salmon originating from rivers and streams south of the Klamath River to and including the Russian River	70 FR 37160, Jun 28, 2005	226.211	223.203.
Salmon, Chinook (Central Valley spring-run ESU).	*Oncorhynchus tshawytscha*	Naturally spawned spring-run Chinook salmon originating from the Sacramento River and its tributaries. Also, spring-run Chinook salmon from the Feather River Hatchery Spring-run Chinook Program. This DPS does not include Chinook salmon that are designated as part of an experimental population	70 FR 37160, Jun 28, 2005	226.211	223.203.
Salmon, Chinook (Central Valley spring-run ESU–XN).	*Oncorhynchus tshawytscha*	Central Valley spring-run Chinook salmon only when, and at such times as, they are found in the San Joaquin River from Friant Dam downstream to its confluence with the Merced River, delineated by a line between decimal latitude and longitude coordinates: 37.348930° N., 120.975174° W. and 37.349099° N., 120.974749° W., as well as all sloughs, channels, floodways, and waterways connected with the San Joaquin River that allow for Central Valley spring-run Chinook salmon access, but excluding the Merced River. Also, Central Valley spring-run Chinook salmon when found in portions of the Kings River that connect with the San Joaquin River during high water years	78 FR 79622, Dec 31, 2013	NA	223.301.

Salmon, Chinook (Lower Columbia River ESU).	*Oncorhynchus tshawytscha*	Naturally spawned Chinook salmon originating from the Columbia River and its tributaries downstream of a transitional point east of the Hood and White Salmon Rivers, and any such fish originating from the Willamette River and its tributaries below Willamette Falls. Not included in this DPS are: (1) spring-run Chinook salmon originating from the Clackamas River; (2) fall-run Chinook salmon originating from Upper Columbia River bright hatchery stocks, that spawn in the mainstem Columbia River below Bonneville Dam, and in other tributaries upstream from the Sandy River to the Hood and White Salmon Rivers; (3) spring-run Chinook salmon originating from the Round Butte Hatchery (Deschutes River, Oregon) and spawning in the Hood River; (4) spring-run Chinook salmon originating from the Carson National Fish Hatchery and spawning in the Wind River; and (5) naturally spawning Chinook salmon originating from the Rogue River Fall Chinook Program. This DPS does include Chinook salmon from 15 artificial propagation programs: the Big Creek Tule Chinook Program; Astoria High School Salmon-Trout Enhancement Program (STEP) Tule Chinook Program; Warrenton High School STEP Tule Chinook Program; Cowlitz Tule Chinook Program; North Fork Toutle Tule Chinook Program; Kalama Tule Chinook Program; Washougal River Tule Chinook Program; Spring Creek National Fish Hatchery (NFH) Tule Chinook Program; Cowlitz Spring Chinook Program in the Upper Cowlitz River and the Cispus River; Friends of the Cowlitz Spring Chinook Program; Kalama River Spring Chinook Program; Lewis River Spring Chinook Program; Fish First Spring Chinook Program; and the Sandy River Hatchery (Oregon Department of Fish and Wildlife Stock #11)	70 FR 37160, Jun 28, 2005	226.212	223.203.
Salmon, Chinook (Puget Sound ESU).	*Oncorhynchus tshawytscha*	Naturally spawned Chinook salmon originating from rivers flowing into Puget Sound from the Elwha River (inclusive) eastward, including rivers in Hood Canal, South Sound, North Sound and the Strait of Georgia. Also, Chinook salmon from 26 artificial propagation programs: the Kendall Creek Hatchery Program; Marblemount Hatchery Program (spring subyearlings and summer-run); Harvey Creek Hatchery Program (summer-run and fall-run); Whitehorse Springs Pond Program; Wallace River Hatchery Program (yearlings and subyearlings); Tulalip Bay Program; Issaquah Hatchery Program; Soos Creek Hatchery Program; Icy Creek Hatchery Program; Keta Creek Hatchery Program; White River Hatchery Program; White Acclimation Pond Program; Hupp Springs Hatchery Program; Voights Creek Hatchery Program; Diru Creek Program; Clear Creek Program; Kalama Creek Program; George Adams Hatchery Program; Rick's Pond Hatchery Program; Hamma Hamma Hatchery Program; Dungeness/Hurd Creek Hatchery Program; Elwha Channel Hatchery Program; and the Skookum Creek Hatchery Spring-run Program	70 FR 37160, Jun 28, 2005	226.212	223.203.
Salmon, Chinook (Snake River fall-run ESU).	*Oncorhynchus tshawytscha*	Naturally spawned fall-run Chinook salmon originating from the mainstem Snake River below Hells Canyon Dam and from the Tucannon River, Grande Ronde River, Imnaha River, Salmon River, and Clearwater River subbasins. Also, fall-run Chinook salmon from four artificial propagation programs: the Lyons Ferry Hatchery Program; Fall Chinook Acclimation Ponds Program; Nez Perce Tribal Hatchery Program; and the Oxbow Hatchery Program	70 FR 37160, Jun 28, 2005	226.205	223.203.

Species [1]			Citation(s) for listing determination(s)	Critical habitat	ESA rules
Common name	Scientific name	Description of listed entity			
Salmon, Chinook (Snake River spring/summer-run ESU).	*Oncorhynchus tshawytscha*	Naturally spawned spring/summer-run Chinook salmon originating from the mainstem Snake River and the Tucannon River, Grande Ronde River, Imnaha River, and Salmon River subbasins. Also, spring/summer-run Chinook salmon from 11 artificial propagation programs: the Tucannon River Program; Lostine River Program; Catherine Creek Program; Lookingglass Hatchery Program; Upper Grande Ronde Program; Imnaha River Program; Big Sheep Creek Program; McCall Hatchery Program; Johnson Creek Artificial Propagation Enhancement Program; Pahsimeroi Hatchery Program; and the Sawtooth Hatchery Program	70 FR 37160, Jun 28, 2005	226.205	223.203.
Salmon, Chinook (Upper Willamette River ESU).	*Oncorhynchus tshawytscha*	Naturally spawned spring-run Chinook salmon originating from the Clackamas River and from the Willamette River and its tributaries above Willamette Falls. Also, spring-run Chinook salmon from six artificial propagation programs: the McKenzie River Hatchery Program (Oregon Department of Fish and Wildlife (ODFW) Stock #23); Marion Forks Hatchery/North Fork Santiam River Program (ODFW Stock #21); South Santiam Hatchery Program (ODFW Stock #24) in the South Fork Santiam River and Mollala River; Willamette Hatchery Program (ODFW Stock #22); and the Clackamas Hatchery Program (ODFW Stock #19)	70 FR 37160, Jun 28, 2005	226.212	223.203.
Salmon, Chinook (Upper Columbia River spring-run ESU–XN).	*Oncorhynchus tshawytscha*	Upper Columbia River spring-run Chinook salmon only when, and at such times, as they are found in the mainstem or tributaries of the Okanogan River from the Canada-United States border to the confluence of the Okanogan River with the Columbia River, Washington	79 FR 40004, Jul 11, 2014	NA	223.301
Salmon, chum (Columbia River ESU).	*Oncorhynchus keta*	Naturally spawned chum salmon originating from the Columbia River and its tributaries in Washington and Oregon. Also, chum salmon from two artificial propagation programs: the Grays River Program and the Washougal River Hatchery/Duncan Creek Program	70 FR 37160, Jun 28, 2005	226.212	223.203.
Salmon, chum (Hood Canal summer-run ESU).	*Oncorhynchus keta*	Naturally spawned summer-run chum salmon originating from Hood Canal and its tributaries as well as from Olympic Peninsula rivers between Hood Canal and Dungeness Bay (inclusive). Also, summer-run chum salmon from four artificial propagation programs: the Hamma Hamma Fish Hatchery Program; Lilliwaup Creek Fish Hatchery Program; Tahuya River Program; and the Jimmycomelately Creek Fish Hatchery Program	70 FR 37160, Jun 28, 2005	226.212	223.203.

Salmon, coho (Lower Columbia River ESU).	*Oncorhynchus kisutch*	Naturally spawned coho salmon originating from the Columbia River and its tributaries downstream from the Big White Salmon and Hood Rivers (inclusive) and any such fish originating from the Willamette River and its tributaries below Willamette Falls. Also, coho salmon from 21 artificial propagation programs: the Grays River Program; Peterson Coho Project; Big Creek Hatchery Program (Oregon Department of Fish and Wildlife (ODFW) Stock #13); Astoria High School Salmon-Trout Enhancement Program (STEP) Coho Program; Warrenton High School STEP Coho Program; Cowlitz Type-N Coho Program in the Upper and Lower Cowlitz Rivers; Cowlitz Game and Anglers Coho Program; Friends of the Cowlitz Coho Program; North Fork Toutle River Hatchery Program; Kalama River Type-N Coho Program; Kalama River Type-S Coho Program; Lewis River Type-N Coho Program; Lewis River Type-S Coho Program; Fish First Wild Coho Program; Fish First Type-N Coho Program; Syverson Project Type-N Coho Program; Washougal River Type-N Coho Program; Eagle Creek National Fish Hatchery Program; Sandy Hatchery Program (ODFW Stock #11); and the Bonneville/Cascade/Oxbow Complex (ODFW Stock #14) Hatchery Program	70 FR 37160, Jun 28, 2005	NA	223.203.
Salmon, coho (Oregon Coast ESU).	*Oncorhynchus kisutch*	Naturally spawned coho salmon originating from coastal rivers south of the Columbia River and north of Cape Blanco. Also, coho salmon from one artificial propagation program: the Cow Creek Hatchery Program (Oregon Department of Fish and Wildlife Stock #18)	76 FR 35755, Jun 20, 2011	226.212	223.203.
Salmon, coho (Southern Oregon/Northern California Coast ESU).	*Oncorhynchus kisutch*	Naturally spawned coho salmon originating from coastal streams and rivers between Cape Blanco, Oregon, and Punta Gorda, California. Also, coho salmon from three artificial propagation programs: the Cole Rivers Hatchery Program (ODFW Stock #52); Trinity River Hatchery Program; and the Iron Gate Hatchery Program	70 FR 37160, Jun 28, 2005	226.210	223.203.
Salmon, sockeye (Ozette Lake ESU).	*Oncorhynchus nerka*	Naturally spawned sockeye salmon originating from the Ozette River and Ozette Lake and its tributaries. Also, sockeye salmon from two artificial propagation programs: the Umbrella Creek Hatchery Program; and the Big River Hatchery Program	70 FR 37160, Jun 28, 2005	226.212	223.203.
Shark, scalloped hammerhead (Central & Southwest Atlantic DPS).	*Sphyrna lewini*	Scalloped hammerhead sharks originating from the Central & Southwest Atlantic Ocean, including all waters of the Caribbean Sea, the Bahamas' EEZ off the coast of Florida, the U.S. EEZ off Puerto Rico and the U.S. Virgin Islands, and Cuba's EEZ, and further delineated by the following boundary lines: bounded to the north by 28° N. lat., to the east by 30° W. long., and to the south by 36° S. lat	79 FR 38214, Jul 3, 2014	NA	NA
Shark, scalloped hammerhead (Indo-West Pacific DPS).	*Sphyrna lewini*	Scalloped hammerhead sharks originating from the Indo-West Pacific Ocean, delineated by the following boundary lines: bounded to the south by 36° S. lat., to the west by 20° E. long., and to the north by 40° N. lat. In the east, the boundary line extends from 175° E. long. due south to 10° N. lat., then due east along 10° N. lat. to 150° W. long., then due south to 4° S. lat., then due east along 4° S. lat. to 130° W. long, and then extends due south along 130° W. long	79 FR 38214, Jul 3, 2014	NA	NA
Steelhead (California Central Valley DPS).	*Oncorhynchus mykiss*	Naturally spawned anadromous *O. mykiss* (steelhead) originating below natural and manmade impassable barriers from the Sacramento and San Joaquin Rivers and their tributaries; excludes such fish originating from San Francisco and San Pablo Bays and their tributaries. This DPS does include steelhead from two artificial propagation programs: the Coleman National Fish Hatchery Program, and the Feather River Fish Hatchery Program	71 FR 834, Jan 5, 2006	226.211	223.203.

Species [1]			Citation(s) for listing determination(s)	Critical habitat	ESA rules
Common name	Scientific name	Description of listed entity			
Steelhead (Central California Coast DPS).	*Oncorhynchus mykiss*	Naturally spawned anadromous *O. mykiss* (steelhead) originating below natural and manmade impassable barriers from the Russian River to and including Aptos Creek, and all drainages of San Francisco and San Pablo Bays eastward to Chipps Island at the confluence of the Sacramento and San Joaquin Rivers. Also, steelhead from two artificial propagation programs: the Don Clausen Fish Hatchery Program, and the Kingfisher Flat Hatchery Program (Monterey Bay Salmon and Trout Project)	71 FR 834, Jan 5, 2006	226.211	223.203.
Steelhead (Lower Columbia River DPS).	*Oncorhynchus mykiss*	Naturally spawned anadromous *O. mykiss* (steelhead) originating below natural and manmade impassable barriers from rivers between the Cowlitz and Wind Rivers (inclusive) and the Willamette and Hood Rivers (inclusive); excludes such fish originating from the upper Willamette River basin above Willamette Falls. This DPS does include steelhead from seven artificial propagation programs: the Cowlitz Trout Hatchery Late Winter-run Program (Lower Cowlitz); Kalama River Wild Winter-run and Summer-run Programs; Clackamas Hatchery Late Winter-run Program (Oregon Department of Fish and Wildlife (ODFW) Stock #122); Sandy Hatchery Late Winter-run Program (ODFW Stock #11); Hood River Winter-run Program (ODFW Stock #50); and the Lewis River Wild Late-run Winter Steelhead Program	71 FR 834, Jan 5, 2006	226.212	223.203.ROW≤
Steelhead (Middle Columbia River DPS).	*Oncorhynchus mykiss*	Naturally spawned anadromous *O. mykiss* (steelhead) originating below natural and manmade impassable barriers from the Columbia River and its tributaries upstream of the Wind and Hood Rivers (exclusive) to and including the Yakima River; excludes such fish originating from the Snake River basin. This DPS does include steelhead from seven artificial propagation programs: the Touchet River Endemic Program; Yakima River Kelt Reconditioning Program (in Satus Creek, Toppenish Creek, Naches River, and Upper Yakima River); Umatilla River Program (Oregon Department of Fish and Wildlife (ODFW) Stock #91); and the Deschutes River Program (ODFW Stock #66). This DPS does not include steelhead that are designated as part of an experimental population	71 FR 834, Jan 5, 2006	226.212	223.203.
Steelhead (Middle Columbia River DPS–XN).	*Oncorhynchus mykiss*	Middle Columbia River steelhead only when, and at such times as, they are found above Round Butte Dam	78 FR 2893, Jan. 15, 2013	NA	223.301.
Steelhead (Northern California DPS).	*Oncorhynchus mykiss*	Naturally spawned anadromous *O. mykiss* (steelhead) originating below natural and manmade impassable barriers in California coastal river basins from Redwood Creek to and including the Gualala River	71 FR 834, Jan 5, 2006	226.211	223.203.
Steelhead (Puget Sound DPS).	*Oncorhynchus mykiss*	Naturally spawned anadromous *O. mykiss* (steelhead) originating below natural and manmade impassable barriers from rivers flowing into Puget Sound from the Elwha River (inclusive) eastward, including rivers in Hood Canal, South Sound, North Sound and the Strait of Georgia. Also, steelhead from six artificial propagation programs: the Green River Natural Program; White River Winter Steelhead Supplementation Program; Hood Canal Steelhead Supplementation Off-station Projects in the Dewatto, Skokomish, and Duckabush Rivers; and the Lower Elwha Fish Hatchery Wild Steelhead Recovery Program	72 FR 26722, May 11, 2007	NA	223.203.

Steelhead (Snake River Basin DPS).	*Oncorhynchus mykiss*	Naturally spawned anadromous *O. mykiss* (steelhead) originating below natural and manmade impassable barriers from the Snake River basin. Also, steelhead from six artificial propagation programs: the Tucannon River Program; Dworshak National Fish Hatchery Program; Lolo Creek Program; North Fork Clearwater Program; East Fork Salmon River Program; and the Little Sheep Creek/Imnaha River Hatchery Program (Oregon Department of Fish and Wildlife Stock #29)	71 FR 834, Jan 5, 2006	226.212	223.203.
Steelhead (South-Central California Coast DPS).	*Oncorhynchus mykiss*	Naturally spawned anadromous *O. mykiss* (steelhead) originating below natural and manmade impassable barriers from the Pajaro River to (but not including) the Santa Maria River	71 FR 834, Jan 5, 2006	226.211	223.203.
Steelhead (Upper Columbia River DPS).	*Oncorhynchus mykiss*	Naturally spawned anadromous *O. mykiss* (steelhead) originating below natural and manmade impassable barriers from the Columbia River and its tributaries upstream of the Yakima River to the U.S.-Canada border. Also, steelhead from six artificial propagation programs: the Wenatchee River Program; Wells Hatchery Program (in the Methow and Okanogan Rivers); Winthrop National Fish Hatchery Program; Omak Creek Program; and the Ringold Hatchery Program	71 FR 834, Jan 5, 2006	226.212	223.203.
Steelhead (Upper Willamette River DPS).	*Oncorhynchus mykiss*	Naturally spawned anadromous winter-run *O. mykiss* (steelhead) originating below natural and manmade impassable barriers from the Willamette River and its tributaries upstream of Willamette Falls to and including the Calapooia River	71 FR 834, Jan 5, 2006	226.212	223.203.
Sturgeon, Atlantic (Atlantic subspecies; Gulf of Maine DPS).	*Acipenser oxyrinchus oxyrinchus*	Anadromous Atlantic sturgeon originating from watersheds from the Maine/Canadian border and extending southward to include all associated watersheds draining into the Gulf of Maine as far south as Chatham, Massachusetts	77 FR 5880, Feb 6, 2012	NA	223.211.
Sturgeon, Atlantic (Gulf subspecies).	*Acipenser oxyrinchus desotoi*	Entire subspecies	56 FR 49653, Sep 30, 1991	226.214	17.44(v).
Sturgeon, green (Southern DPS).	*Acipenser medirostris*	Green sturgeon originating from the Sacramento River basin and from coastal rivers south of the Eel River (exclusive)	71 FR 17757, April 7, 2006; 71 FR 19241, April 13, 2006	226.219	223.210.
Corals					
Coral, elkhorn	*Acropora palmata*	Entire species	71 FR 26852, May 9, 2006	226.216	223.208.
Coral, staghorn ..	*Acropora cervicornis*	Entire species	71 FR 26852, May 9, 2006	226.216	223.208.
Marine Plants					
Seagrass, Johnson's.	*Halophila johnsonii*	Entire species	63 FR 49035, Sep 14, 1998	226.213	NA.

[1] Species includes taxonomic species, subspecies, distinct population segments (DPSs) (for a policy statement, see 61 FR 4722, February 7, 1996), and evolutionarily significant units (ESUs) (for a policy statement, see 56 FR 58612, November 20, 1991).

[2] Jurisdiction for sea turtles by the Department of Commerce, National Oceanic and Atmospheric Administration, National Marine Fisheries Service, is limited to turtles while in the water.

[79 FR 20806, Apr. 14, 2014, as amended at 79 FR 38240, July 3, 2014; 79 FR 40015, July 11, 2014]

EFFECTIVE DATE NOTE: At 79 FR 54122, Sept. 10, 214, in § 223.102, the table in paragraph (e) was amended by removing the two existing entries under the ''Corals'' subheading and adding 22 entries, effective Oct. 10, 2014. For the covenience of the user, the added material is included to read as follows:

§ 223.102 Enumeration of threatened marine and anadromous species.

* * * * *

(e) * * *

Species [1]			Citation(s) for listing determination(s)	Critical habitat	ESA rules
Common name	Scientific name	Description of listed entity			
* *	*	*	*	*	*
Corals					
Coral, [no common name]	*Acropora globiceps*	Entire species	79 FR 53852, Sep 10, 2014	NA	NA
Coral, [no common name]	*Acropora jacquelineae*	Entire species	79 FR 53852, Sep 10, 2014	NA	NA
Coral, [no common name]	*Acropora lokani*	Entire species	79 FR 53852, Sep 10, 2014	NA	NA
Coral, [no common name]	*Acropora pharaonis*	Entire species	79 FR 53852, Sep 10, 2014	NA	NA
Coral, [no common name]	*Acropora retusa*	Entire species	79 FR 53852, Sep 10, 2014	NA	NA
Coral, [no common name]	*Acropora rudis*	Entire species	79 FR 53852, Sep 10, 2014	NA	NA
Coral, [no common name]	*Acropora speciosa*	Entire species.	79 FR 53852, Sep 10, 2014	NA	NA
Coral, [no common name]	*Acropora tenella*	Entire species.	79 FR 53852, Sep 10, 2014	NA	NA
Coral, [no common name]	*Anacropora spinosa*	Entire species	79 FR 53852, Sep 10, 2014	NA	NA
Coral, [no common name]	*Euphyllia paradivisa*	Entire species	79 FR 53852, Sep 10, 2014	NA	NA
Coral, [no common name]	*Isopora crateriformis*	Entire species.	79 FR 53852, Sep 10, 2014	NA	NA
Coral, [no common name]	*Montipora australiensis*	Entire species.	79 FR 53852, Sep 10, 2014	NA	NA
Coral, [no common name]	*Pavona diffluens*	Entire species	79 FR 53852, Sep 10, 2014	NA	NA
Coral, [no common name]	*Porites napopora*	Entire species	79 FR 53852, Sep 10, 2014	NA	NA
Coral, [no common name]	*Seriatopora aculeata*	Entire species	79 FR 53852, Sep 10, 2014	NA	NA
Coral, boulder star	*Orbicella franksi*	Entire species	79 FR 53852, Sep 10, 2014	NA	NA
Coral, elkhorn	*Acropora palmata*	Entire species	79 FR 53852, Sep 10, 2014	226.216	223.208
Coral, lobed star	*Orbicella annularis*	Entire species	79 FR 53852, Sep 10, 2014	NA	NA
Coral, mountainous star	*Orbicella faveolata*	Entire species	79 FR 53852, Sep 10, 2014	NA	NA
Coral, pillar	*Dendrogyra cylindrus*	Entire species	79 FR 53852, Sep 10, 2014	NA	NA
Coral, rough cactus	*Mycetophyllia ferox*	Entire species	79 FR 53852, Sep 10, 2014	NA	NA
Coral, staghorn	*Acropora cervicornis*	Entire species	79 FR 53852, Sep 10, 2014	226.216	223.208

Subpart B—Restrictions Applicable to Threatened Marine and Anadromous Species

§ 223.201 Guadalupe fur seal.

(a) *Prohibitions.* The prohibitions of section 9 of the Act (16 U.S.C. 1538) relating to endangered species apply to the Guadalupe fur seal except as provided in paragraph (b) of this section.

(b) *Exceptions.* (1) The Assistant Administrator may issue permits authorizing activities which would otherwise be prohibited under paragraph (a) of this section subject to the provisions of part 222 subpart C, General Permit Procedures.

(2) Any Federal, State or local government official, employee, or designated agent may, in the course of official duties, take a stranded Guadalupe fur seal without a permit if such taking:

(i) Is accomplished in a humane manner;

(ii) Is for the protection or welfare of the animal, is for the protection of the public health or welfare, or is for the salvage or disposal of a dead specimen;

(iii) Includes steps designed to ensure the return of the animal to its natural habitat, if feasible; and

(iv) Is reported within 30 days to the Regional Administrator, Southwest Region, National Marine Fisheries Service, 501 West Ocean Blvd., Suite 4200, Long Beach, CA 90802.

(3) Any animal or specimen taken under paragraph (b)(2) of this section may only be retained, disposed of, or salvaged in accordance with directions from the Director, Southwest Region.

[50 FR 51258, Dec. 16, 1985. Redesignated and amended at 64 FR 14068, Mar. 23, 1999, as amended at 79 FR 20812, Apr. 14, 2014]

§ 223.202 [Reserved]

§ 223.203 Anadromous fish.

Available guidance documents cited in the regulatory text are listed in Appendix A to this section.

(a) *Prohibitions*. The prohibitions of section 9(a)(1) of the ESA (16 U.S.C. 1538(a)(1)) relating to endangered species apply to fish with an intact adipose fin that are part of the threatened West Coast salmon ESUs and steelhead DPSs (of the genus *Oncorhynchus*) listed in § 223.102.

(b) Limits on the prohibitions. The limits to the prohibitions of paragraph (a) of this section relating to threatened West Coast salmon ESUs and steelhead DPSs (of the genus *Oncorhynchus*) listed in § 223.102 are described in the following paragraphs:

(1) The exceptions of section 10 of the ESA (16 U.S.C. 1539) and other exceptions under the Act relating to endangered species, including regulations in part 222 of this chapter implementing such exceptions, also apply to the threatened West Coast salmon ESUs and steelhead DPSs (of the genus *Oncorhynchus*) listed in § 223.102.

(2) The prohibitions of paragraph (a) of this section relating to threatened Puget Sound steelhead listed in § 223.102 do not apply to:

(i) Activities specified in an application for a permit for scientific purposes or to enhance the conservation or survival of the species, provided that the application has been received by the Assistant Administrator for Fisheries, NOAA (AA), no later than November 14, 2008. The prohibitions of this section apply to these activities upon the AA's rejection of the application as insufficient, upon issuance or denial of a permit, or June 1, 2009, whichever occurs earliest, or

(ii) Steelhead harvested in tribal or recreational fisheries prior to June 1, 2009, so long as the harvest is authorized by the State of Washington or a tribe with jurisdiction over steelhead harvest. If NMFS does not receive a fishery management plan for Puget Sound steelhead by November 14, 2008, subsequent take by harvest will be subject to the take prohibitions.

(3) The prohibitions of paragraph (a) of this section relating to the threatened West Coast salmon ESUs and steelhead DPSs (of the genus *Oncorhynchus*) listed in § 223.102 do not apply to any employee or designee of NMFS, the United States Fish and Wildlife Service, any Federal land management agency, the Idaho Department of Fish and Game (IDFG), Washington Department of Fish and Wildlife (WDFW), the Oregon Department of Fish and Wildlife (ODFW), California Department of Fish and Game (CDFG), or of any other governmental entity that has co-management authority for the listed salmonids, when the employee or designee, acting in the course of his or her official duties, takes a threatened salmonid without a permit if such action is necessary to:

(i) Aid a sick, injured, or stranded salmonid,

(ii) Dispose of a dead salmonid, or

(iii) Salvage a dead salmonid which may be useful for scientific study.

(iv) Each agency acting under this limit on the take prohibitions of paragraph (a) of this section is to report to NMFS the numbers of fish handled and their status, on an annual basis. A designee of the listed entities is any individual the Federal or state fishery agency or other co-manager has authorized in writing to perform the listed functions.

(4) The prohibitions of paragraph (a) of this section relating to the threatened West Coast salmon ESUs and steelhead DPSs (of the genus *Oncorhynchus*) listed in § 223.102 do not apply to fishery harvest activities provided that:

(i) Fisheries are managed in accordance with a NMFS-approved Fishery Management and Evaluation Plan (FMEP) and implemented in accordance with a letter of concurrence from NMFS. NMFS will approve an FMEP only if it clearly defines its intended scope and area of impact and sets forth the management objectives and performance indicators for the plan. The plan must adequately address the following criteria:

(A) Define populations within affected listed ESUs, taking into account spatial and temporal distribution, genetic and phenotypic diversity, and other appropriate identifiably unique

biological and life history traits. Populations may be aggregated for management purposes when dictated by information scarcity, if consistent with survival and recovery of the listed ESU. In identifying management units, the plan shall describe the reasons for using such units in lieu of population units, describe how the management units are defined, given biological and life history traits, so as to maximize consideration of the important biological diversity contained within the listed ESU, respond to the scale and complexity of the ESU, and help ensure consistent treatment of listed salmonids across a diverse geographic and jurisdictional range.

(B) Utilize the concepts of ''viable'' and ''critical'' salmonid population thresholds, consistent with the concepts contained in the technical document entitled ''Viable Salmonid Populations (NMFS, 2000b).'' The VSP paper provides a framework for identifying the biological requirements of listed salmonids, assessing the effects of management and conservation actions, and ensuring that such actions provide for the survival and recovery of listed species. Proposed management actions must recognize the significant differences in risk associated with viable and critical population threshold states and respond accordingly to minimize the long-term risks to population persistence. Harvest actions impacting populations that are functioning at or above the viable threshold must be designed to maintain the population or management unit at or above that level. For populations shown with a high degree of confidence to be above critical levels but not yet at viable levels, harvest management must not appreciably slow the population's achievement of viable function. Harvest actions impacting populations that are functioning at or below critical threshold must not be allowed to appreciably increase genetic and demographic risks facing the population and must be designed to permit the population's achievement of viable function, unless the plan demonstrates that the likelihood of survival and recovery of the entire ESU in the wild would not be appreciably reduced by greater risks to that individual population.

(C) Set escapement objectives or maximum exploitation rates for each management unit or population based on its status and on a harvest program that assures that those rates or objectives are not exceeded. Maximum exploitation rates must not appreciably reduce the likelihood of survival and recovery of the ESU. Management of fisheries where artificially propagated fish predominate must not compromise the management objectives for commingled naturally spawned populations.

(D) Display a biologically based rationale demonstrating that the harvest management strategy will not appreciably reduce the likelihood of survival and recovery of the ESU in the wild, over the entire period of time the proposed harvest management strategy affects the population, including effects reasonably certain to occur after the proposed actions cease.

(E) Include effective monitoring and evaluation programs to assess compliance, effectiveness, and parameter validation. At a minimum, harvest monitoring programs must collect catch and effort data, information on escapements, and information on biological characteristics, such as age, fecundity, size and sex data, and migration timing.

(F) Provide for evaluating monitoring data and making any revisions of assumptions, management strategies, or objectives that data show are needed.

(G) Provide for effective enforcement and education. Coordination among involved jurisdictions is an important element in ensuring regulatory effectiveness and coverage.

(H) Include restrictions on resident and anadromous species fisheries that minimize any take of listed species, including time, size, gear, and area restrictions.

(I) Be consistent with plans and conditions established within any Federal court proceeding with continuing jurisdiction over tribal harvest allocations.

(ii) The state monitors the amount of take of listed salmonids occurring in its fisheries and provides to NMFS on a regular basis, as defined in NMFS' letter of concurrence for the FMEP, a report summarizing this information, as

well as the implementation and effectiveness of the FMEP. The state shall provide NMFS with access to all data and reports prepared concerning the implementation and effectiveness of the FMEP.

(iii) The state confers with NMFS on its fishing regulation changes affecting listed ESUs to ensure consistency with the approved FMEP. Prior to approving a new or amended FMEP, NMFS will publish notification in the FEDERAL REGISTER announcing its availability for public review and comment. Such an announcement will provide for a comment period on the draft FMEP of not less than 30 days.

(iv) NMFS provides written concurrence of the FMEP which specifies the implementation and reporting requirements. NMFS' approval of a plan shall be a written approval by NMFS Southwest or Northwest Regional Administrator, as appropriate. On a regular basis, NMFS will evaluate the effectiveness of the program in protecting and achieving a level of salmonid productivity commensurate with conservation of the listed salmonids. If it is not, NMFS will identify ways in which the program needs to be altered or strengthened. If the responsible agency does not make changes to respond adequately to the new information, NMFS will publish notification in the FEDERAL REGISTER announcing its intention to withdraw the limit for activities associated with that FMEP. Such an announcement will provide for a comment period of not less than 30 days, after which NMFS will make a final determination whether to withdraw the limit so that the prohibitions would then apply to those fishery harvest activities. A template for developing FMEPs is available from NMFS Northwest Region's website (*www.nwr.noaa.gov*).

(v) [Reserved]

(5) The prohibitions of paragraph (a) of this section relating to the threatened West Coast salmon ESUs and steelhead DPSs (of the genus *Oncorhynchus*) listed in § 223.102 do not apply to activity associated with artificial propagation programs provided that:

(i) A state or Federal Hatchery and Genetics Management Plan (HGMP) has been approved by NMFS as meeting the following criteria:

(A) The HGMP has clearly stated goals, performance objectives, and performance indicators that indicate the purpose of the program, its intended results, and measurements of its performance in meeting those results. Goals shall address whether the program is intended to meet conservation objectives, contribute to the ultimate sustainability of natural spawning populations, and/or intended to augment tribal, recreational, or commercial fisheries. Objectives should enumerate the results desired from the program that will be used to measure the program's success or failure.

(B) The HGMP utilizes the concepts of viable and critical salmonid population threshold, consistent with the concepts contained in the technical document entitled ''Viable Salmonid Populations'' (NMFS, 2000b). Listed salmonids may be purposefully taken for broodstock purposes only if the donor population is currently at or above the viable threshold and the collection will not impair its function; if the donor population is not currently viable but the sole objective of the current collection program is to enhance the propagation or survival of the listed ESU; or if the donor population is shown with a high degree of confidence to be above critical threshold although not yet functioning at viable levels, and the collection will not appreciably slow the attainment of viable status for that population.

(C) Taking into account health, abundances, and trends in the donor population, broodstock collection programs reflect appropriate priorities. The primary purpose of broodstock collection programs of listed species is to reestablish indigenous salmonid populations for conservation purposes. Such programs include restoration of similar, at-risk populations within the same ESU, and reintroduction of at-risk populations to underseeded habitat. After the species' conservation needs are met and when consistent with survival and recovery of the ESU, broodstock collection programs may be authorized by NMFS such for secondary purposes, as to sustain tribal, recreational, and commercial fisheries.

(D) The HGMP includes protocols to address fish health, broodstock collection, broodstock spawning, rearing and release of juveniles, deposition of hatchery adults, and catastrophic risk management.

(E) The HGMP evaluates, minimizes, and accounts for the propagation program's genetic and ecological effects on natural populations, including disease transfer, competition, predation, and genetic introgression caused by the straying of hatchery fish.

(F) The HGMP describes interrelationships and interdependencies with fisheries management. The combination of artificial propagation programs and harvest management must be designed to provide as many benefits and as few biological risks as possible for the listed species. For programs whose purpose is to sustain fisheries, HGMPs must not compromise the ability of FMEPs or other management plans to conserve listed salmonids.

(G) Adequate artificial propagation facilities exist to properly rear progeny of naturally spawned broodstock, to maintain population health and diversity, and to avoid hatchery-influenced selection or domestication.

(H) Adequate monitoring and evaluation exist to detect and evaluate the success of the hatchery program and any risks potentially impairing the recovery of the listed ESU.

(I) The HGMP provides for evaluating monitoring data and making any revisions of assumptions, management strategies, or objectives that data show are needed;

(J) NMFS provides written concurrence of the HGMP which specifies the implementation and reporting requirements. For Federally operated or funded hatcheries, the ESA section 7 consultation will achieve this purpose.

(K) The HGMP is consistent with plans and conditions set within any Federal court proceeding with continuing jurisdiction over tribal harvest allocations.

(ii) The state monitors the amount of take of listed salmonids occurring in its hatchery program and provides to NMFS on a regular basis a report summarizing this information, and the implementation and effectiveness of the HGMP as defined in NMFS' letter of concurrence. The state shall provide NMFS with access to all data and reports prepared concerning the implementation and effectiveness of the HGMP.

(iii) The state confers with NMFS on a regular basis regarding intended collections of listed broodstock to ensure congruity with the approved HGMP.

(iv) Prior to final approval of an HGMP, NMFS will publish notification in the FEDERAL REGISTER announcing its availability for public review and comment for a period of at least 30 days.

(v) NMFS' approval of a plan shall be a written approval by NMFS Southwest or Northwest Regional Administrator, as appropriate.

(vi) On a regular basis, NMFS will evaluate the effectiveness of the HGMP in protecting and achieving a level of salmonid productivity commensurate with the conservation of the listed salmonids. If the HGMP is not effective, the NMFS will identify to the jurisdiction ways in which the program needs to be altered or strengthened. If the responsible agency does not make changes to respond adequately to the new information, NMFS will publish notification in the FEDERAL REGISTER announcing its intention to withdraw the limit on activities associated with that program. Such an announcement will provide for a comment period of no less than 30 days, after which NMFS will make a final determination whether to withdraw the limit so that take prohibitions, likeall other activity not within a limit, would then apply to that program. A template for developing HGMPs is available from NMFS Northwest Region's website (*www.nwr.noaa.gov*).

(6) The prohibitions of paragraph (a) of this section relating to the threatened West Coast salmon ESUs and steelhead DPSs (of the genus *Oncorhynchus*) listed in § 223.102 do not apply to actions undertaken in compliance with a resource management plan developed jointly by the States of Washington, Oregon and/or Idaho and the Tribes (joint plan) within the continuing jurisdiction of *United States* v. *Washington* or *United States* v. *Oregon*, the on-going Federal court proceedings

to enforce and implement reserved treaty fishing rights, provided that:

(i) The Secretary has determined pursuant to 50 CFR 223.209 and the government-to-government processes therein that implementing and enforcing the joint tribal/state plan will not appreciably reduce the likelihood of survival and recovery of affected threatened ESUs.

(ii) The joint plan will be implemented and enforced within the parameters set forth in *United States* v. *Washington* or *United States* v. *Oregon*.

(iii) In making that determination for a joint plan, the Secretary has taken comment on how any fishery management plan addresses the criteria in § 223.203(b)(4), or on how any hatchery and genetic management plan addresses the criteria in § 223.203(b)(5).

(iv) The Secretary shall publish notice in the FEDERAL REGISTER of any determination whether or not a joint plan, will appreciably reduce the likelihood of survival and recovery of affected threatened ESUs, together with a discussion of the biological analysis underlying that determination.

(v) On a regular basis, NMFS will evaluate the effectiveness of the joint plan in protecting and achieving a level of salmonid productivity commensurate with conservation of the listed salmonids. If the plan is not effective, then NMFS will identify to the jurisdiction ways in which the joint plan needs to be altered or strengthened. If the responsible agency does not make changes to respond adequately to the new information, NMFS will publish notification in the FEDERAL REGISTER announcing its intention to withdraw the limit on activities associated with that joint plan. Such an announcement will provide for a comment period of no less than 30 days, after which NMFS will make a final determination whether to withdraw the limit so that take prohibitions would then apply to that joint plan as to all other activity not within a limit.

(7) The prohibitions of paragraph (a) of this section relating to the threatened West Coast salmon ESUs and steelhead DPSs (of the genus *Oncorhynchus*) listed in § 223.102 do not apply to scientific research activities provided that:

(i) Scientific research activities involving purposeful take is conducted by employees or contractors of the ODFW, WDFW (Agencies), IDFG, or CDFG (Agencies), or as a part of a monitoring and research program overseen by or coordinated with that Agency.

(ii) The Agencies provide for NMFS' review and approval a list of all scientific research activities involving direct take planned for the coming year, including an estimate of the total direct take that is anticipated, a description of the study design, including a justification for taking the species and a description of the techniques to be used, and a point of contact.

(iii) The Agencies annually provide to NMFS the results of scientific research activities directed at threatened salmonids, including a report of the direct take resulting from the studies and a summary of the results of such studies.

(iv) Scientific research activities that may incidentally take threatened salmonids are either conducted by agency personnel, or are in accord with a permit issued by the Agency.

(v) The Agencies provide NMFS annually, for its review and approval, a report listing all scientific research activities it conducts or permits that may incidentally take threatened salmonids during the coming year. Such reports shall also contain the amount of incidental take of threatened salmonids occurring in the previous year's scientific research activities and a summary of the results of such research.

(vi) Electrofishing in any body of water known or suspected to contain threatened salmonids is conducted in accordance with NMFS ''Guidelines for Electrofishing Waters Containing Salmonids Listed Under the Endangered Species Act'' (NMFS, 2000a).

(vii) NMFS' approval of a research program shall be a written approval by NMFS Northwest or Southwest Regional Administrator.

(8) The prohibitions of paragraph (a) of this section relating to the threatened West Coast salmon ESUs and steelhead DPSs (of the genus *Oncorhynchus*) listed in § 223.102 do not apply to habitat restoration activities,

as defined in paragraph (b)(8)(iv) of this section, provided that the activity is part of a watershed conservation plan, and:

(i) The watershed conservation plan has been certified by the State of Washington, Oregon, Idaho, or California (State) to be consistent with the state's watershed conservation plan guidelines.

(ii) The State's watershed conservation plan guidelines have been found by NMFS to provide for plans that:

(A) Take into account the potential severity of direct, indirect, and cumulative impacts of proposed activities in light of the status of affected species and populations.

(B) Will not reduce the likelihood of either survival or recovery of listed species in the wild.

(C) Ensure that any taking will be incidental.

(D) Minimize and mitigate any adverse impacts.

(E) Provide for effective monitoring and adaptive management.

(F) Use the best available science and technology, including watershed analysis.

(G) Provide for public and scientific review and input.

(H) Include any measures that NMFS determines are necessary or appropriate.

(I) Include provisions that clearly identify those activities that are part of plan implementation.

(J) Control risk to listed species by ensuring funding and implementation of the above plan components.

(iii) NMFS will periodically review state certifications of Watershed Conservation Plans to ensure adherence to approved watershed conservation plan guidelines.

(iv) ''Habitat restoration activity'' is defined as an activity whose primary purpose is to restore natural aquatic or riparian habitat conditions or processes. ''Primary purpose'' means the activity would not be undertaken but for its restoration purpose.

(v) Prior to approving watershed conservation plan guidelines under paragraph (b)(8)(ii) of this section, NMFS will publish notification in the FEDERAL REGISTER announcing the availability of the proposed guidelines for public review and comment. Such an announcement will provide for a comment period on the draft guidelines of no less than 30 days.

(9) The prohibitions of paragraph (a) of this section relating to the threatened West Coast salmon ESUs and steelhead DPSs (of the genus *Oncorhynchus*) listed in § 223.102 do not apply to the physical diversion of water from a stream or lake, provided that:

(i) NMFS' engineering staff or any resource agency or tribe NMFS designates (authorized officer) has agreed in writing that the diversion facility is screened, maintained, and operated in compliance with Juvenile Fish Screen Criteria, National Marine Fisheries Service, Northwest Region, Revised February 16, 1995, with Addendum of May 9, 1996, or in California with NMFS' Southwest Region ''Fish Screening Criteria for Anadromous Salmonids, January 1997'' or with any subsequent revision.

(ii) The owner or manager of the diversion allows any NMFS engineer or authorized officer access to the diversion facility for purposes of inspection and determination of continued compliance with the criteria.

(iii) On a case by case basis, NMFS or an Authorized Officer will review and approve a juvenile fish screen design and construction plan and schedule that the water diverter proposes for screen installation. The plan and schedule will describe interim operation measures to avoid take of threatened salmonids. NMFS may require a commitment of compensatory mitigation if implementation of the plan and schedule is terminated prior to completion. If the plan and schedule are not met, or if a schedule modification is made that is not approved by NMFS or Authorized Officer, or if the screen installation deviates from the approved design, the water diversion will be subject to take prohibitions and mitigation.

(iv) This limit on the prohibitions of paragraph (a) of this section does not encompass any impacts of reduced flows resulting from the diversion or impacts caused during installation of the diversion device. These impacts are

subject to the prohibition on take of listed salmonids.

(10) The prohibitions of paragraph (a) of this section relating to the threatened West Coast salmon ESUs and steelhead DPSs (of the genus *Oncorhynchus*) listed in § 223.102 do not apply to routine road maintenance activities provided that:

(i) The activity results from routine road maintenance activity conducted by ODOT employees or agents that complies with ODOT's Transportation Maintenance Management System Water Quality and Habitat Guide (July, 1999); or by employees or agents of a state, county, city or port that complies with a program substantially similar to that contained in the ODOT Guide that is determined to meet or exceed the protections provided by the ODOT Guide; or by employees or agents of a state, county, city or port that complies with a routine road maintenance program that meets proper functioning habitat conditions as described further in subparagraph (ii) following. NMFS' approval of state, city, county, or port programs that are equivalent to the ODOT program, or of any amendments, shall be a written approval by NMFS Northwest or Southwest Regional Administrator, whichever is appropriate. Any jurisdiction desiring its routine road maintenance activities to be within this limit must first commit in writing to apply management practices that result in protections equivalent to or better than those provided by the ODOT Guide, detailing how it will assure adequate training, tracking, and reporting, and describing in detail any dust abatement practices it requests to be covered.

(ii) NMFS finds the routine road maintenance activities of any state, city, county, or port to be consistent with the conservation of listed salmonids' habitat when it contributes, as does the ODOT Guide, to the attainment and maintenance of properly functioning condition (PFC). NMFS defines PFC as the sustained presence of natural habitat-forming processes that are necessary for the long-term survival of salmonids through the full range of environmental variation. Actions that affect salmonid habitat must not impair properly functioning habitat, appreciably reduce the functioning of already impaired habitat, or retard the long-term progress of impaired habitat toward PFC. Periodically, NMFS will evaluate an approved program for its effectiveness in maintaining and achieving habitat function that provides for conservation of the listed salmonids. Whenever warranted, NMFS will identify to the jurisdiction ways in which the program needs to be altered or strengthened. Changes may be identified if the program is not protecting desired habitat functions, or where even with the habitat characteristics and functions originally targeted, habitat is not supporting population productivity levels needed to conserve the ESU. If any jurisdiction within the limit does not make changes to respond adequately to the new information in the shortest amount of time feasible, but not longer than one year, NMFS will publish notification in the FEDERAL REGISTER announcing its intention to withdraw the limit so that take prohibitions would then apply to the program as to all other activity not within a limit. Such an announcement will provide for a comment period of no less than 30 days, after which NMFS will make a final determination whether to subject the activities to the ESA section 9(a)(1) prohibitions.

(iii) Prior to implementing any changes to a program within this limit the jurisdiction provides NMFS a copy of the proposed change for review and approval as within this limit.

(iv) Prior to approving any state, city, county, or port program as within this limit, or approving any substantive change in a program within this limit, NMFS will publish notification in the FEDERAL REGISTER announcing the availability of the program or the draft changes for public review and comment. Such an announcement will provide for a comment period of not less than 30 days.

(v) Pesticide and herbicide spraying is not included within this limit, even if in accord with the ODOT guidance.

(11) The prohibitions of paragraph (a) of this section relating to the threatened West Coast salmon ESUs and steelhead DPSs (of the genus

Oncorhynchus) listed in § 223.102 do not apply to activities within the City of Portland, Oregon Parks and Recreation Department's (PP&R) Pest Management Program (March 1997), including its Waterways Pest Management Policy updated December 1, 1999, provided that:

(i) Use of only the following chemicals is included within this limit on the take prohibitions: Round Up, Rodeo, Garlon 3A, Surfactant LI–700, Napropamide, Cutrine Plus, and Aquashade.

(ii) Any chemical use is initiated in accord with the priorities and decision processes of the Department's Pest Management Policy, including the Waterways Pest Management Policy, updated December 1, 1999.

(iii) Any chemical use within a 25 ft. (7.5 m) buffer complies with the buffer application constraints contained in PP&R's Waterways Pest Management Policy (update December 1, 1999).

(iv) Prior to implementing any changes to this limit, the PP&R provides NMFS with a copy of the proposed change for review and approval as within this limit.

(v) Prior to approving any substantive change in a program within this limit, NMFS will publish notification in the FEDERAL REGISTER announcing the availability of the program or the draft changes for public review and comment. Such an announcement will provide for a comment period of no less than 30 days.

(vi) NMFS' approval of amendments shall be a written approval by NMFS Northwest Regional Administrator.

(vii) NMFS finds the PP&R Pest Management Program activities to be consistent with the conservation of listed salmonids' habitat by contributing to the attainment and maintenance of properly functioning condition (PFC). NMFS defines PFC as the sustained presence of a watershed's natural habitat-forming processes that are necessary for the long-term survival of salmonids through the full range of environmental variation. Actions that affect salmonid habitat must not impair properly functioning habitat, appreciably reduce the functioning of already impaired habitat, or retard the long-term progress of impaired habitat toward PFC. Periodically, NMFS will evaluate the effectiveness of an approved program in maintaining and achieving habitat function that provides for conservation of the listed salmonids. Whenever warranted, NMFS will identify to the jurisdiction ways in which the program needs to be altered or strengthened. Changes may be identified if the program is not protecting desired habitat functions, or where even with the habitat characteristics and functions originally targeted, habitat is not supporting population productivity levels needed to conserve the ESU. If any jurisdiction within the limit does not make changes to respond adequately to the new information in the shortest amount of time feasible, but not longer than 1 year, NMFS will publish notification in the FEDERAL REGISTER announcing its intention to withdraw the limit so that take prohibitions would then apply to the program as to all other activity not within a limit. Such an announcement will provide for a comment period of no less than 30 days, after which NMFS will make a final determination whether to subject the activities to the ESA section 9(a)(1) prohibitions.

(12) The prohibitions of paragraph (a) of this section relating to the threatened West Coast salmon ESUs and steelhead DPSs (of the genus *Oncorhynchus*) listed in § 223.102 do not apply to municipal, residential, commercial, and industrial (MRCI) development (including redevelopment) activities provided that:

(i) Such development occurs pursuant to city, county, or regional government ordinances or plans that NMFS has determined are adequately protective of listed species; or within the jurisdiction of the Metro regional government in Oregon and pursuant to ordinances that Metro has found comply with its Urban Growth Management Functional Plan (Functional Plan) following a determination by NMFS that the Functional Plan is adequately protective. NMFS approval or determinations about any MRCI development ordinances or plans, including the Functional Plan, shall be a written approval

by NMFS Northwest or Southwest Regional Administrator, whichever is appropriate. NMFS will apply the following 12 evaluation considerations when reviewing MRCI development ordinances or plans to assess whether they adequately conserve listed salmonids by maintaining and restoring properly functioning habitat conditions:

(A) MRCI development ordinance or plan ensures that development will avoid inappropriate areas such as unstable slopes, wetlands, areas of high habitat value, and similarly constrained sites.

(B) MRCI development ordinance or plan adequately avoids stormwater discharge impacts to water quality and quantity or to the hydrograph of the watershed, including peak and base flows of perennial streams.

(C) MRCI development ordinance or plan provides adequately protective riparian area management requirements to attain or maintain PFC around all rivers, estuaries, streams, lakes, deepwater habitats, and intermittent streams. Compensatory mitigation is provided, where necessary, to offset unavoidable damage to PFC due to MRCI development impacts to riparian management areas.

(D) MRCI development ordinance or plan avoids stream crossings by roads, utilities, and other linear development wherever possible, and, where crossings must be provided, minimize impacts through choice of mode, sizing, and placement.

(E) MRCI development ordinance or plan adequately protects historical stream meander patterns and channel migration zones and avoids hardening of stream banks and shorelines.

(F) MRCI development ordinance or plan adequately protects wetlands and wetland functions, including isolated wetlands.

(G) MRCI development ordinance or plan adequately preserves the hydrologic capacity of permanent and intermittent streams to pass peak flows.

(H) MRCI development ordinance or plan includes adequate provisions for landscaping with native vegetation to reduce need for watering and application of herbicides, pesticides, and fertilizer.

(I) MRCI development ordinance or plan includes adequate provisions to prevent erosion and sediment run-off during construction.

(J) MRCI development ordinance or plan ensures that water supply demands can be met without impacting flows needed for threatened salmonids either directly or through groundwater withdrawals and that any new water diversions are positioned and screened in a way that prevents injury or death of salmonids.

(K) MRCI development ordinance or plan provides necessary enforcement, funding, reporting, and implementation mechanisms and formal plan evaluations at intervals that do not exceed 5 years.

(L) MRCI development ordinance and plan complies with all other state and Federal environmental and natural resource laws and permits.

(ii) The city, county or regional government provides NMFS with annual reports regarding implementation and effectiveness of the ordinances, including: any water quality monitoring information the jurisdiction has available; aerial photography (or some other graphic display) of each MRCI development or MRCI expansion area at sufficient detail to demonstrate the width and vegetation condition of riparian set-backs; information to demonstrate the success of stormwater management and other conservation measures; and a summary of any flood damage, maintenance problems, or other issues.

(iii) NMFS finds the MRCI development activity to be consistent with the conservation of listed salmonids' habitat when it contributes to the attainment and maintenance of PFC. NMFS defines PFC as the sustained presence of a watershed's habitat-forming processes that are necessary for the long-term survival of salmonids through the full range of environmental variation. Actions that affect salmonid habitat must not impair properly functioning habitat, appreciably reduce the functioning of already impaired habitat, or retard the long-term progress of impaired habitat toward PFC. Periodically, NMFS will evaluate an approved program for its effectiveness in maintaining and achieving habitat function that provides for conservation of the

listed salmonids. Whenever warranted, NMFS will identify to the jurisdiction ways in which the program needs to be altered or strengthened. Changes may be identified if the program is not protecting desired habitat functions, or where even with the habitat characteristics and functions originally targeted, habitat is not supporting population productivity levels needed to conserve the ESU. If any jurisdiction within the limit does not make changes to respond adequately to the new information in the shortest amount of time feasible, but not longer than 1 year, NMFS will publish notification in the FEDERAL REGISTER announcing its intention to withdraw the limit so that take prohibitions would then apply to the program as to all other activity not within a limit. Such an announcement will provide for a comment period of no less than 30 days, after which NMFS will make a final determination whether to subject the activities to the ESA section 9(a)(1) prohibitions.

(iv) Prior to approving any city, county, or regional government ordinances or plans as within this limit, or approving any substantive change in an ordinance or plan within this limit, NMFS will publish notification in the FEDERAL REGISTER announcing the availability of the ordinance or plan or the draft changes for public review and comment. Such an announcement will provide for a comment period of no less than 30 days.

(13) The prohibitions of paragraph (a) of this section relating to the threatened West Coast salmon ESUs and steelhead DPSs (of the genus *Oncorhynchus*) listed in § 223.102 do not apply to non-Federal forest management activities conducted in the State of Washington provided that:

(i) The action is in compliance with forest practice regulations adopted and implemented by the Washington Forest Practices Board that NMFS has found are at least as protective of habitat functions as are the regulatory elements of the Forests and Fish Report dated April 29, 1999, and submitted to the Forest Practices Board by a consortium of landowners, tribes, and state and Federal agencies.

(ii) All non-regulatory elements of the Forests and Fish Report are being implemented.

(iii) Actions involving use of herbicides, pesticides, or fungicides are not included within this limit.

(iv) Actions taken under alternative plans are included in this limit provided that the Washington Department of Natural Resources (WDNR) finds that the alternate plans protect physical and biological processes at least as well as the state forest practices rules and provided that NMFS, or any resource agency or tribe NMFS designates, has the opportunity to review the plan at every stage of the development and implementation. A plan may be excluded from this limit if, after such review, WDNR determines that the plan is not likely to adequately protect listed salmon.

(v) Prior to determining that regulations adopted by the Forest Practice Board are at least as protective as the elements of the Forests and Fish Report, NMFS will publish notification in the FEDERAL REGISTER announcing the availability of the Report and regulations for public review and comment.

(vi) NMFS finds the activities to be consistent with the conservation of listed salmonids' habitat by contributing to the attainment and maintenance of PFC. NMFS defines PFC as the sustained presence of a watershed's natural habitat-forming processes that are necessary for the long-term survival of salmonids through the full range of environmental variation. Actions that affect salmonid habitat must not impair properly functioning habitat, appreciably reduce the functioning of already impaired habitat, or retard the long-term progress of impaired habitat toward PFC. Programs must meet this biological standard in order for NMFS to find they qualify for a habitat-related limit. NMFS uses the best available science to make these determinations. NMFS may review and revise previous findings as new scientific information becomes available. NMFS will evaluate the effectiveness of the program in maintaining and achieving habitat function that provides for conservation of the listed

salmonids. If the program is not adequate, NMFS will identify to the jurisdiction ways in which the program needs to be altered or strengthened. Changes may be identified if the program is not protecting desired habitat functions or where even with the habitat characteristics and functions originally targeted, habitat is not supporting population productivity levels needed to conserve the ESU. If Washington does not make changes to respond adequately to the new information, NMFS will publish notification in the FEDERAL REGISTER announcing its intention to withdraw the limit on activities associated with the program. Such an announcement will provide for a comment period of no less than 30 days, after which NMFS will make a final determination whether to subject the activities to the ESA section 9(a)(1) take prohibitions.

(vii) NMFS approval of regulations shall be a written approval by NMFS Northwest Regional Administrator.

(c) *Affirmative Defense*. In connection with any action alleging a violation of the prohibitions of paragraph (a) of this section with respect to the threatened West Coast salmon ESUs and steelhead DPSs (of the genus *Oncorhynchus*) listed in § 223.102, any person claiming the benefit of any limit listed in paragraph (b) of this section or § 223.204(a) shall have a defense where the person can demonstrate that the limit is applicable and was in force, and that the person fully complied with the limit at the time of the alleged violation. This defense is an affirmative defense that must be raised, pleaded, and proven by the proponent. If proven, this defense will be an absolute defense to liability under section 9(a)(1)(G) of the ESA with respect to the alleged violation.

(d) *Severability*. The provisions of this section and the various applications thereof are distinct and severable from one another. If any provision or the application thereof to any person or circumstances is stayed or determined to be invalid, such stay or invalidity shall not affect other provisions, or the application of such provisions to other persons or circumstances, which can be given effect without the stayed or invalid provision or application.

APPENDIX A TO § 223.203—LIST OF GUIDANCE DOCUMENTS

The following is a list of documents cited in the regulatory text. Copies of these documents may be obtained upon request from the Northwest or Southwest Regional Administrators (see Table 1 in § 600.502 of this title).

1. Oregon Department of Transportation (ODOT) Maintenance Management System Water Quality and Habitat Guide (July, 1999).

2. Guidelines for Electrofishing Waters Containing Salmonids Listed Under the Endangered Species Act.

3. Fish Screening Criteria for Anadromous Salmonids, National Marine Fisheries Service, Southwest Region, 1997.

4. Viable Salmonid Populations and the Recovery of Evolutionarily Significant Units. (June 2000).

[65 FR 42475, July 10, 2000, as amended at 67 FR 1129, Jan. 9, 2002; 67 FR 68725, Nov. 12, 2002; 70 FR 37202, 37203, June 28, 2005; 71 FR 5180, Feb. 1, 2006; 73 FR 7843, Feb. 11, 2008; 73 FR 55455, Sept. 25, 2008; 76 FR 12293, Mar. 7, 2011; 79 FR 20812, Apr. 14, 2014]

§ 223.204 Tribal plans.

(a) *Limits on the prohibitions*. The prohibitions of § 223.203(a) of this subpart relating to threatened species of salmonids listed in § 223.102 do not apply to any activity undertaken by a tribe, tribal member, tribal permittee, tribal employee, or tribal agent in compliance with a Tribal resource management plan (Tribal Plan), provided that the Secretary determines that implementation of such Tribal Plan will not appreciably reduce the likelihood of survival and recovery of the listed salmonids. In making that determination the Secretary shall use the best available biological data (including any tribal data and analysis) to determine the Tribal Plan's impact on the biological requirements of the species, and will assess the effect of the Tribal Plan on survival and recovery, consistent with legally enforceable tribal rights and with the Secretary's trust responsibilities to tribes.

(b) *Consideration of a Tribal Plan*. (1) A Tribal Plan may include but is not limited to plans that address fishery harvest, artificial production, research, or water or land management, and may be developed by one tribe or jointly with other tribes. The Secretary will consult on a government-to-government

basis with any tribe that so requests and will provide to the maximum extent practicable technical assistance in examining impacts on listed salmonids and other salmonids as tribes develop Tribal resource management plans that meet the management responsibilities and needs of the tribes. A Tribal Plan must specify the procedures by which the tribe will enforce its provisions.

(2) Where there exists a Federal court proceeding with continuing jurisdiction over the subject matter of a Tribal Plan, the plan may be developed and implemented within the ongoing Federal Court proceeding. In such circumstances, compliance with the Tribal Plan's terms shall be determined within that Federal Court proceeding.

(3) The Secretary shall seek comment from the public on the Secretary's pending determination whether or not implementation of a Tribal Plan will appreciably reduce the likelihood of survival and recovery of the listed salmonids.

(4) The Secretary shall publish notification in the FEDERAL REGISTER of any determination regarding a Tribal Plan and the basis for that determination.

[65 FR 42485, July 10, 2000. Redesignated at 70 FR 37203, June 28, 2005]

§ 223.205 Sea turtles.

(a) The prohibitions of section 9 of the Act (16 U.S.C. 1538) relating to endangered species apply to threatened species of sea turtle, except as provided in § 223.206.

(b) Except as provided in § 223.206, it is unlawful for any person subject to the jurisdiction of the United States to do any of the following:

(1) Own, operate, or be on board a vessel, except if that vessel is in compliance with all applicable provisions of § 223.206(d);

(2) Fish for, catch, take, harvest, or possess, fish or wildlife while on board a vessel, except if that vessel is in compliance with all applicable provisions of § 223.206(d);

(3) Fish for, catch, take, harvest, or possess, fish or wildlife contrary to any notice of tow-time or other restriction specified in, or issued under, § 223.206(d)(3) or (d)(4);

(4) Possess fish or wildlife taken in violation of paragraph (b) of this section;

(5) Fail to follow any of the sea turtle handling and resuscitation requirements specified in § 223.206(d)(1);

(6) Possess a sea turtle in any manner contrary to the handling and resuscitation requirements of § 223.206(d)(1);

(7) Fail to comply immediately, in the manner specified at § 600.730 (b) through (d) of this Title, with instructions and signals specified therein issued by an authorized officer, including instructions and signals to haul back a net for inspection;

(8) Refuse to allow an authorized officer to board a vessel, or to enter an area where fish or wildlife may be found, for the purpose of conducting a boarding, search, inspection, seizure, investigation, or arrest in connection with enforcement of this section;

(9) Destroy, stave, damage, or dispose of in any manner, fish or wildlife, gear, cargo, or any other matter after a communication or signal from an authorized officer, or upon the approach of such an officer or of an enforcement vessel or aircraft, before the officer has an opportunity to inspect same, or in contravention of directions from the officer;

(10) Assault, resist, oppose, impede, intimidate, threaten, obstruct, delay, prevent, or interfere with an authorized officer in the conduct of any boarding, search, inspection, seizure, investigation, or arrest in connection with enforcement of this section;

(11) Interfere with, delay, or prevent by any means, the apprehension of another person, knowing that such person committed an act prohibited by this section;

(12) Resist a lawful arrest for an act prohibited by this section;

(13) Make a false statement, oral or written, to an authorized officer or to the agency concerning the fishing for, catching, taking, harvesting, landing, purchasing, selling, or transferring fish or wildlife, or concerning any other matter subject to investigation under this section by such officer, or required to be submitted under this part 223;

(14) Sell, barter, trade or offer to sell, barter, or trade, a TED that is not an approved TED;

(15) Fail to comply with the restrictions set forth in § 223.206(d)(10) regarding pound net leaders;

(16) Set, use, or fail to remove a pound net leader in Pound Net Regulated Area I or Pound Net Regulated Area II at any time from May 6 through July 15 that does not meet the leader construction specifications described in 50 CFR 223.206(d)(10) and 50 CFR 222.102;

(17) Set, use, or haul a modified pound net leader in Pound Net Regulated Area I or Pound Net Regulated Area II defined in 50 CFR 222.102 and referenced in 50 CFR 223.206(d)(10) at any time from May 6 through July 15 unless that leader has been inspected and tagged by NMFS in accordance with 50 CFR 223.206(d)(10)(vii) prior to deploying the leader;

(18) Alter or replace any portion of a pound net leader that has been previously tagged by NMFS in accordance with 50 CFR 223.206(d)(10)(vii) so that the altered or replaced portion is no longer consistent with the modified pound net leader definition in 50 CFR 222.102, unless that altered or replaced portion is inspected and tagged by NMFS in accordance with 50 CFR 223.206(d)(10)(vii) or that alteration or replacement occurs after the regulated period of May 6 through July 15;

(19) Remove, transfer, sell, purchase, affix, or tamper with any tags used by NMFS to mark pound net leaders;

(20) Fish, use, or haul a modified pound net leader at any time from May 6 through July 15 unless the fisherman has on board the vessel a letter issued by NMFS indicating that the leader has passed inspection;

(21) Fail to comply with the restrictions set forth in § 223.206(d)(11) regarding sea scallop dredges; or

(22) Attempt to do, solicit another to do, or cause to be done, any of the foregoing.

(c) In connection with any action alleging a violation of this section, any person claiming the benefit of any exemption, exception, or permit under this subpart B has the burden of proving that the exemption, exception, or permit is applicable, was granted, and was valid and in force at the time of the alleged violation. Further, any person claiming that a modification made to a TED that is the subject of such an action complies with the requirements of § 223.207 (c) or (d) has the burden of proving such claim.

[64 FR 14069, Mar. 23, 1999, as amended at 67 FR 41203, June 17, 2002; 69 FR 25012, May 5, 2004; 71 FR 50372, Aug. 25, 2006; 73 FR 68354, Nov. 18, 2008]

§ 223.206 Exceptions to prohibitions relating to sea turtles.

(a) *Permits*—(1) *Scientific research, education, zoological exhibition, or species enhancement permits.* The Assistant Administrator may issue permits authorizing activities which would otherwise be prohibited under § 223.205(a) for scientific or educational purposes, for zoological exhibition, or to enhance the propagation or survival of threatened species of sea turtles, in accordance with and subject to the conditions of part 222, subpart C—General Permit Procedures.

(2) *Incidental-take permits.* The Assistant Administrator may issue permits authorizing activities that would otherwise be prohibited under § 223.205(a) in accordance with section 10(a)(1)(B) of the Act (16 U.S.C. 1539(a)(1)(B)), and in accordance with, and subject to, the implementing regulations in part 222 of this chapter. Such permits may be issued for the incidental taking of threatened and endangered species of sea turtles.

(b) *Exception for injured, dead, or stranded specimens.* If any member of any threatened species of sea turtle is found injured, dead, or stranded, any agent or employee of the National Marine Fisheries Service, the Fish and Wildlife Service, the U.S. Coast Guard, or any other Federal land or water management agency, or any agent or employee of a state agency responsible for fish and wildlife who is designated by his or her agency for such purposes, may, when acting in the course of his or her official duties, take such specimens without a permit if such taking is necessary to aid a sick, injured, or stranded specimen or dispose of a dead specimen or salvage a dead specimen which may be useful for scientific study. Whenever possible, live specimens shall be returned to their aquatic environment as soon as possible. Every action shall be reported in writing to

the Assistant Administrator within 30 days, and reports of further occurrence shall be made as deemed appropriate by the Assistant Administrator until the specimen is either returned to its environment or disposed of. Reports shall be mailed by registered or certified mail, return receipt requested, to the Assistant Administrator and shall contain the following information:

(1) Name and position of the official or employee involved;

(2) Description of the specimen(s) involved;

(3) Date and location of disposal;

(4) Circumstances requiring the action;

(5) Method of disposal;

(6) Disposition of the specimen(s), including, where the specimen(s) has been retained in captivity, a description of the place and means of confinement, and the measures taken for its maintenance and care; and

(7) Such other information as the Assistant Administrator may require.

(c) *Exception for research or conservation*. Any employee or agent of the National Marine Fisheries Service, the Fish and Wildlife Service, or a state fish and wildlife agency operating a conservation program pursuant to the terms of a Cooperative Agreement with the National Marine Fisheries Service or the Fish and Wildlife Service in accordance with section 6(c) of the Act, designated by his or her agency for such purposes, may, when acting in the course of his or her official duties, take any threatened species to carry out scientific research or conservation programs. All such takings shall be reported within 30 days of the taking to the Assistant Administrator who may request additional reports of the taking and research at the Assistant Administrator's discretion.

(d) *Exception for incidental taking*. The prohibitions against taking in § 223.205(a) do not apply to the incidental take of any member of a threatened species of sea turtle (i.e., a take not directed towards such member) during fishing or scientific research activities, to the extent that those involved are in compliance with all applicable requirements of paragraphs (d)(1) through (d)(11) of this section, or in compliance with the terms and conditions of an incidental take permit issued pursuant to paragraph (a)(2) of this section.

(1) *Handling and resuscitation requirements*. (i) Any specimen taken incidentally during the course of fishing or scientific research activities must be handled with due care to prevent injury to live specimens, observed for activity, and returned to the water according to the following procedures:

(A) Sea turtles that are actively moving or determined to be dead as described in paragraph (d)(1)(i)(C) of this section must be released over the stern of the boat. In addition, they must be released only when fishing or scientific collection gear is not in use, when the engine gears are in neutral position, and in areas where they are unlikely to be recaptured or injured by vessels.

(B) Resuscitation must be attempted on sea turtles that are comatose, or inactive, as determined in paragraph (d)(1) of this section, by:

(*1*) Placing the turtle on its bottom shell (plastron) so that the turtle is right side up and elevating its hindquarters at least 6 inches (15.2 cm) for a period of 4 up to 24 hours. The amount of the elevation depends on the size of the turtle; greater elevations are needed for larger turtles. Periodically, rock the turtle gently left to right and right to left by holding the outer edge of the shell (carapace) and lifting one side about 3 inches (7.6 cm) then alternate to the other side. Gently touch the eye and pinch the tail (reflex test) periodically to see if there is a response.

(*2*) Sea turtles being resuscitated must be shaded and kept damp or moist but under no circumstance be placed into a container holding water. A water-soaked towel placed over the head, carapace, and flippers is the most effective method in keeping a turtle moist.

(*3*) Sea turtles that revive and become active must be released over the stern of the boat only when fishing or scientific collection gear is not in use, when the engine gears are in neutral position, and in areas where they are unlikely to be recaptured or injured by vessels. Sea turtles that fail to respond to the reflex test or fail to move within 4 hours (up to 24, if possible) must be

returned to the water in the same manner as that for actively moving turtles.

(C) A turtle is determined to be dead if the muscles are stiff (rigor mortis) and/or the flesh has begun to rot; otherwise the turtle is determined to be comatose or inactive and resuscitation attempts are necessary.

(ii) In addition to the provisions of paragraph (d)(1)(i) of this section, a person aboard a vessel in the Atlantic, including the Caribbean Sea and the Gulf of Mexico, that has pelagic or bottom longline gear on board and that has been issued, or is required to have, a limited access permit for highly migratory species under § 635.4 of this title, must comply with the handling and release requirements specified in § 635.21 of this title.

(iii) Any specimen taken incidentally during the course of fishing or scientific research activities must not be consumed, sold, landed, offloaded, transshipped, or kept below deck.

(2) *Gear requirements for trawlers*—(i) *TED requirement for shrimp trawlers.* Any shrimp trawler that is in the Atlantic Area or Gulf Area must have an approved TED installed in each net that is rigged for fishing. A net is rigged for fishing if it is in the water, or if it is shackled, tied, or otherwise connected to any trawl door or board, or to any tow rope, cable, pole or extension, either on board or attached in any manner to the shrimp trawler. Exceptions to the TED requirement for shrimp trawlers are provided in paragraph (d)(2)(ii) of this section.

(ii) *Exemptions from the TED requirement*—(A) *Alternative tow-time restrictions.* A shrimp trawler is exempt from the TED requirements of paragraph (d)(2)(i) of this section if it complies with the alternative tow-time restrictions in paragraph (d)(3)(i) of this section and if it:

(*1*) Has on board no power or mechanical-advantage trawl retrieval system (i.e., any device used to haul any part of the net aboard);

(*2*) Is a bait shrimper that retains all live shrimp on board with a circulating seawater system, if it does not possess more than 32 lb. (14.5 kg) of dead shrimp on board, if it has a valid original state bait-shrimp license, and if the state license allows the licensed vessel to participate in the bait shrimp fishery exclusively;

(*3*) Has only a pusher-head trawl, skimmer trawl, or wing net rigged for fishing;

(*4*) Is in an area during a period for which tow-time restrictions apply under paragraphs (d)(3)(ii) or (iii) of this section, if it complies with all applicable provisions imposed under those paragraphs; or

(*5*) Is using a single test net (try net) with a headrope length of 12 ft (3.6 m) or less and with a footrope length of 15 ft (4.6 m) or less, if it is pulled immediately in front of another net or is not connected to another net in any way, if no more than one test net is used at a time, and if it is not towed as a primary net, in which case the exemption under this paragraph (d)(2)(ii)(A) applies to the test net.

(B) *Exempted gear or activities.* The following fishing gear or activities are exempted from the TED requirements of paragraph (d)(2)(i) of this section:

(*1*) A beam or roller trawl, if the frame is outfitted with rigid vertical bars, and if none of the spaces between the bars, or between the bars and the frame, exceeds 4 inches (10.2 cm); and

(*2*) A shrimp trawler fishing for, or possessing, royal red shrimp, if royal red shrimp constitutes at least 90 percent (by weight) of all shrimp either found on board, or offloaded from that shrimp trawler.

(iii) *Gear requirement—summer flounder trawlers*—(A) *TED requirement.* (*1*) Any summer flounder trawler in the summer flounder fishery-sea turtle protection area must have an approved TED installed in each net that is rigged for fishing. A net is rigged for fishing if it is in the water, or if it is shackled, tied, or otherwise connected to any trawl door or board, or to any tow rope, cable, pole or extension, either on board or attached in any manner to the summer flounder trawler. Exceptions to the TED requirement for summer flounder trawlers are provided in paragraph (d)(2)(iii)(B) of this section.

(*2*) Any approved hard TED or special hard TED installed in a summer flounder trawl must be installed in a TED extension. The TED extension is a cylindrical piece of webbing distinct from

the main trawl's body, wings, codend, and any other net extension(s). The TED extension must be constructed of webbing no larger than 3.5 inch (8.9 cm) stretched mesh. The TED extension must extend at least 24 inches (61.0 cm) but not more than 36 inches (91.4 cm) forward of the leading edge of the TED and aft of the trailing edge of the grid.

(B) *Exemptions from the TED requirement*. Any summer flounder trawler north of 35°46.1′ N. lat. (Oregon Inlet, NC) from January 15 through March 15 annually is exempt from the TED requirement of paragraph (d)(2)(iii)(A) of this section, unless the Assistant Administrator determines that TED use is necessary to protect sea turtles or ensure compliance, pursuant to the procedures of paragraph (d)(4) of this section.

(C) *Monitoring*. Summer flounder trawlers must carry onboard a NMFS-approved observer if requested by the Southeast Regional Administrator or the Northeast Regional Administrator. A written notification will be sent to the address specified for the vessel in either the NMFS or state fishing permit application, or to the address specified for registration or documentation purposes, or upon written notification otherwise served on the owner or operator of the vessel. Owners and operators must comply with the terms and conditions specified in such written notification. All NMFS-approved observers will report any violations of this section, or other applicable regulations and laws. Information collected by observers may be used for enforcement purposes.

(D) *Additional sea turtle conservation measures*. The Assistant Administrator may impose other such restrictions upon summer flounder trawlers as the Assistant Administrator deems necessary or appropriate to protect sea turtles and ensure compliance, pursuant to the procedures of paragraph (d)(4) of this section. Such measures may include, but are not limited to, a requirement to use TEDs in areas other than summer flounder fishery-sea turtle protection area, a requirement to use limited tow-times, and closure of the fishery.

(3) *Tow-time restrictions*—(i) *Duration of tows*. If tow-time restrictions are utilized pursuant to paragraph (d)(2)(ii), (d)(3)(ii), or (d)(3)(iii) of this section, a shrimp trawler must limit tow times. The tow time is measured from the time that the trawl door enters the water until it is removed from the water. For a trawl that is not attached to a door, the tow time is measured from the time the codend enters the water until it is removed from the water. Tow times may not exceed:

(A) 55 minutes from April 1 through October 31; and

(B) 75 minutes from November 1 through March 31.

(ii) *Alternative—special environmental conditions*. The Assistant Administrator may allow compliance with tow-time restrictions, as an alternative to the TED requirement of paragraph (d)(2)(i) of this section, if the Assistant Administrator determines that the presence of algae, seaweed, debris or other special environmental conditions in a particular area makes trawling with TED-equipped nets impracticable.

(iii) *Substitute—ineffectiveness of TEDs*. The Assistant Administrator may require compliance with tow-time restrictions, as a substitute for the TED requirement of paragraph (d)(2)(i) of this section, if the Assistant Administrator determines that TEDs are ineffective in protecting sea turtles.

(iv) *Notice; applicability; conditions*. The Assistant Administrator will publish notification concerning any tow-time restriction imposed under paragraph (d)(3)(ii) or (iii) of this section in the FEDERAL REGISTER and will announce it in summary form on channel 16 of the marine VHF radio. A notification of tow-time restrictions will include findings in support of these restrictions as an alternative to, or as substitute for, the TED requirements. The notification will specify the effective dates, the geographic area where tow-time restrictions apply, and any applicable conditions or restrictions that the Assistant Administrator determines are necessary or appropriate to protect sea turtles and ensure compliance, including, but not limited to, a requirement to carry observers, to register vessels in accordance with procedures at paragraph (d)(5) of this section, or for all shrimp trawlers in the area to synchronize their tow times so

that all trawl gear remains out of the water during certain times. A notification withdrawing tow-time restrictions will include findings in support of that action.

(v) *Procedures*. The Assistant Administrator will consult with the appropriate fishery officials (state or Federal) where the affected shrimp fishery is located in issuing a notification concerning tow-time restrictions. An emergency notification can be effective for a period of up to 30 days and may be renewed for additional periods of up to 30 days each if the Assistant Administrator finds that the conditions necessitating the imposition of tow-time restrictions continue to exist. The Assistant Administrator may invite comments on such an action, and may withdraw or modify the action by following procedures similar to those for implementation. The Assistant Administrator will implement any permanent tow-time restriction through rulemaking.

(4) *Limitations on incidental takings during fishing activities*—(i) *Limitations*. The exemption for incidental takings of sea turtles in paragraph (d) of this section does not authorize incidental takings during fishing activities if the takings:

(A) Would violate the restrictions, terms, or conditions of an incidental take statement or biological opinion;

(B) Would violate the restrictions, terms, or conditions of an incidental take permit; or

(C) May be likely to jeopardize the continued existence of a species listed under the Act.

(ii) *Determination; restrictions on fishing activities*. The Assistant Administrator may issue a determination that incidental takings during fishing activities are unauthorized. Pursuant thereto, the Assistant Administrator may restrict fishing activities in order to conserve a species listed under the Act, including, but not limited to, restrictions on the fishing activities of vessels subject to paragraph (d)(2) of this section. The Assistant Administrator will take such action if the Assistant Administrator determines that restrictions are necessary to avoid unauthorized takings that may be likely to jeopardize the continued existence of a listed species. The Assistant Administrator may withdraw or modify a determination concerning unauthorized takings or any restriction on fishing activities if the Assistant Administrator determines that such action is warranted.

(iii) *Notice; applicability; conditions*. The Assistant Administrator will publish a notification of a determination concerning unauthorized takings or a notification concerning the restriction of fishing activities in the FEDERAL REGISTER. The Assistant Administrator will provide as much advance notice as possible, consistent with the requirements of the Act, and will announce the notification in summary form on channel 16 of the marine VHF radio. Notification of a determination concerning unauthorized takings will include findings in support of that determination; specify the fishery, including the target species and gear used by the fishery, the area, and the times, for which incidental takings are not authorized; and include such other conditions and restrictions as the Assistant Administrator determines are necessary or appropriate to protect sea turtles and ensure compliance. Notification of restriction of fishing activities will include findings in support of the restriction, will specify the time and area where the restriction is applicable, and will specify any applicable conditions or restrictions that the Assistant Administrator determines are necessary or appropriate to protect sea turtles and ensure compliance. Such conditions and restrictions may include, but are not limited to, limitations on the types of fishing gear that may be used, tow-time restrictions, alteration or extension of the periods of time during which particular tow-time requirements apply, requirements to use TEDs, registration of vessels in accordance with procedures at paragraph (d)(5) of this section, and requirements to provide observers. Notification of withdrawal or modification will include findings in support of that action.

(iv) *Procedures*. The Assistant Administrator will consult with the appropriate fisheries officials (state or Federal) where the fishing activities are

located in issuing notification of a determination concerning unauthorized takings or notification concerning the restriction of fishing activities. An emergency notification will be effective for a period of up to 30 days and may be renewed for additional periods of up to 30 days each, except that emergency placement of observers will be effective for a period of up to 180 days and may be renewed for an additional period of 60 days. The Assistant Administrator may invite comments on such action, and may withdraw or modify the action by following procedures similar to those for implementation. The Assistant Administrator will implement any permanent determination or restriction through rulemaking.

(5)–(6) [Reserved]

(7) Restrictions applicable to gillnet fisheries in North Carolina. No person may fish with gillnet fishing gear which has a stretched mesh size larger than 4 ¼ inches (10.8 cm), annually from September 1 through December 15, in the inshore waters of Pamlico Sound, North Carolina, and all contiguous tidal waters, bounded on the north by 35°46.3′ N. lat., on the south by 35°00′ N. lat., and on the west by 76°30′ W. long.

(8) *Restrictions applicable to large mesh gillnet fisheries in the mid-Atlantic region*. No person may fish with or possess on board a boat, any gillnet with a stretched mesh size 7–inches (17.8 cm) or larger, unless such gillnets are covered with canvas or other similar material and lashed or otherwise securely fastened to the deck or the rail, and all buoys larger than 6–inches (15.2 cm) in diameter, high flyers, and anchors are disconnected. This restriction applies in the Atlantic Exclusive Economic Zone (as defined in 50 CFR 600.10) during the following time periods and in the following area:

(i) Waters north of 33°51.0′ N. (North Carolina/South Carolina border at the coast) and south of 35°46.0′ N. (Oregon Inlet) at any time;

(ii) Waters north of 35°46.0′ N. (Oregon Inlet) and south of 3°22.5′ N. (Currituck Beach Light, NC) from March 16 through January 14;

(iii) Waters north of 36°22.5′ N. (Currituck Beach Light, NC) and south of 37°34.6′ N. (Wachapreague Inlet, VA) from April 1 through January 14; and

(iv) Waters north of 37°34.6′ N. (Wachapreague Inlet, VA) and south of 37°56.0′ N. (Chincoteague, VA) from April 16 through January 14.

(9) *Restrictions applicable to Pacific pelagic longline vessels*. In addition to the general prohibitions specified in § 600.725 of chapter VI of this title, it is unlawful for any person who is not operating under a western Pacific longline permit under § 665.801 of this title to do any of the following on the high seas of the Pacific Ocean east of 150° W. long. and north of the Equator (0° N. lat.):

(i) Direct fishing effort toward the harvest of swordfish (*Xiphias gladius*) using longline gear.

(ii) Possess a light stick on board a longline vessel. A light stick as used in this paragraph is any type of light emitting device, including any fluorescent *glow bead*, chemical, or electrically powered light that is affixed underwater to the longline gear.

(iii) An operator of a longline vessel subject to this section may land or possess no more than 10 swordfish from a fishing trip where any part of the trip included fishing east of 150° W. long. and north of the equator (0° N. lat.).

(iv) Fail to employ basket-style longline gear such that the mainline is deployed slack when fishing.

(v) When a conventional monofilament longline is deployed by a vessel, no fewer than 15 branch lines may be set between any two floats. Vessel operators using basket-style longline gear must set a minimum of 10 branch lines between any 2 floats.

(vi) Longline gear must be deployed such that the deepest point of the main longline between any two floats, i.e., the deepest point in each sag of the main line, is at a depth greater than 100 m (328.1 ft or 54.6 fm) below the sea surface.

(10) *Restrictions applicable to pound nets in Virginia*—(i) *Offshore pound net leaders in Pound Net Regulated Area I*. During the time period of May 6 through July 15 each year, any offshore pound net leader in Pound Net Regulated Area I must meet the definition of a modified pound net leader. Any offshore pound net leader in Pound Net

Regulated Area I that does not meet the definition of a modified pound net leader must be removed from the water prior to May 6 and may not be reset until July 16.

(ii) *Nearshore pound net leaders in Pound Net Regulated Area I and all pound net leaders in Pound Net Regulated Area II.* During the time period of May 6 to July 15 each year, any nearshore pound net leader in Pound Net Regulated Area I and any pound net leader in Pound Net Regulated Area II must have only mesh size less than 12 inches (30.5 cm) stretched mesh and may not employ stringers. Any nearshore pound net leader in Pound Net Regulated Area I or any pound net leader in Pound Net Regulated Area II with stretched mesh measuring 12 inches (30.5 cm) or greater, or with stringers, must be removed from the water prior to May 6 and may not be reset until July 16. A pound net leader is exempt from these measures only if it meets the definition of a modified pound net leader.

(iii) *Protocol for measuring mesh size.* This protocol applies to measuring mesh size in leaders described in 50 CFR 223.206(d)(10)(i) and 223.206(d)(10)(ii). Mesh sizes are measured by a wedge-shaped gauge having a taper of 0.79 in. (2 cm) in 3.15 in. (8 cm) and a thickness of 0.09 in. (2.3 mm) inserted into the meshes under a pressure or pull of 11.02 lb. (5 kg). The mesh size is the average of the measurement of any series of 20 consecutive meshes. The mesh in the leader is measured at or near the horizontal and vertical center of a leader panel.

(iv) *Reporting requirement.* At any time during the year, if a sea turtle is taken live and uninjured in a pound net operation, the operator of the vessel must report the incident to the NMFS Northeast Regional Office, (978) 281–9328 or fax (978) 281–9394, within 24 hours of returning from the trip in which the incidental take was discovered. The report shall include a description of the sea turtles condition at the time of release and the measures taken as required in paragraph (d)(1) of this section. At any time during the year, if a sea turtle is taken in a pound net operation, and is determined to be injured, or if a turtle is captured dead, the operator of the vessel shall immediately notify NMFS Northeast Regional Office and the appropriate rehabilitation or stranding network, as determined by NMFS Northeast Regional Office.

(v) *Monitoring.* Owners or operators of pound net fishing operations must allow access to the pound net gear so it may be observed by a NMFS-approved observer if requested by the Northeast Regional Administrator. All NMFS-approved observers will report any violations of this section, or other applicable regulations and laws. Information collected by observers may be used for law enforcement purposes.

(vi) *Expedited modification of restrictions and effective dates.* From May 6 to July 15 of each year, if NMFS receives information that one sea turtle is entangled alive or that one sea turtle is entangled dead, and NMFS determines that the entanglement contributed to its death, in pound net leaders that are in compliance with the restrictions described in paragraph (d)(10)(ii) of this section, NMFS may issue a final rule modifying the restrictions on pound net leaders as necessary to protect threatened sea turtles. Such modifications may include, but are not limited to, reducing the maximum allowable mesh size of pound net leaders and prohibiting the use of pound net leaders regardless of mesh size. In addition, if information indicates that a significant level of sea turtle entanglements, impingements or strandings will likely continue beyond July 15, NMFS may issue a final rule extending the effective date of the restrictions, including any additional restrictions imposed under this paragraph (d)(10)(vi), for an additional 15 days, but not beyond July 30, to protect threatened sea turtles.

(vii) Modified leader inspection program. Any fisherman planning to use a modified pound net leader in Pound Net Regulated Area I or Pound Net Regulated Area II at any time from May 6 through July 15 must make his/her leader available for inspection and tagging by NMFS according to the following procedures. At least 72 hours prior to deploying a modified pound net leader, the fisherman or his/her representative must call NMFS at 757–414–0128 between 7:00 a.m. and 5:00 p.m.

local time and arrange for a mutually agreeable meeting date, time, and place. The fisherman must meet NMFS at such location at the designated time and allow NMFS to examine his or her gear to help ensure the leader is in compliance with the definition of a modified pound net leader. NMFS will ascertain whether the leader meets the following four criteria taken from that definition: (1) the lower portion of the leader is mesh and the upper portion consists of only vertical lines; (2) the mesh size is equal to or less than 8 inches (20.3 cm) stretched mesh; (3) the vertical lines are equal to or greater than 5/16 inch (0.8 cm) in diameter and strung vertically at least every 2 feet (61 cm); and (4) the vertical lines are hard lay lines with a level of stiffness equivalent to the stiffness of a 5/16 inch (0.8 cm) diameter line composed of polyester wrapped around a blend of polypropylene and polyethylene and containing approximately 42 visible twists of strands per foot of line. NMFS will also measure the height of the mesh in relation to the height of the entire leader. During the inspection, the fisherman must provide accurate and specific latitude and longitude coordinates of the location at which the leader will be deployed, as well as information on the low water depth at each end of the modified leader at the site at which it will be set. If the leader meets the four criteria previously described, the measurement of the height of the mesh in relation to the total height of the leader is recorded, and the low water depth and latitude and longitude coordinates of the specific location at which the leader will be deployed are provided and recorded, the leader will pass inspection. If it passes inspection, NMFS will tag the leader with one or more tamperproof tags. Removing or tampering with any tag placed on the leader by NMFS is prohibited. If a tag is damaged, destroyed, or lost due to any cause, the fisherman must call NMFS at 757–414–0128 within 48 hours of discovery to report this incident. After the leader is determined to have passed inspection, NMFS will issue a letter to the fisherman indicating that the leader passed inspection. The fisherman must retain that letter on board his/her vessel tending the inspected leader at all times it is deployed. Modified pound net leaders must pass inspection prior to being used at any time during the time period from May 6 through July 15 of each year.

(11) *Restrictions applicable to sea scallop dredges in the mid-Atlantic*—(i) *Gear Modification*. During the time period of May 1 through November 30, any vessel with a sea scallop dredge and required to have a Federal Atlantic sea scallop fishery permit, regardless of dredge size or vessel permit category, that enters waters south of 41°9.0′ N. latitude, from the shoreline to the outer boundary of the Exclusive Economic Zone must have on each dredge a chain mat described as follows. The chain mat must be composed of horizontal (''tickler'') chains and vertical (''up-and-down'') chains that are configured such that the openings formed by the intersecting chains have no more than 4 sides. The vertical and horizontal chains must be hung to cover the opening of the dredge bag such that the vertical chains extend from the back of the cutting bar to the sweep. The horizontal chains must intersect the vertical chains such that the length of each side of the openings formed by the intersecting chains is less than or equal to 14 inches (35.5 cm) with the exception of the side of any individual opening created by the sweep. The chains must be connected to each other with a shackle or link at each intersection point. The measurement must be taken along the chain, with the chain held taut, and include one shackle or link at the intersection point and all links in the chain up to, but excluding, the shackle or link at the other intersection point.

(ii) Any vessel that enters the waters described in paragraph (d)(11)(i) of this section and that is required to have a Federal Atlantic sea scallop fishery permit must have the chain mat configuration installed on all dredges for the duration of the trip.

(iii) Vessels subject to the requirements in paragraphs (d)(11)(i) and (d)(11)(ii) of this section transiting waters south of 41°9.0′ N. latitude, from the shoreline to the outer boundary of the Exclusive Economic Zone, will be exempted from the chain-mat requirements provided the dredge gear is

stowed in accordance with § 648.23(b) and there are no scallops on-board.

[64 FR 14070, Mar. 23, 1999]

EDITORIAL NOTE: For FEDERAL REGISTER citations affecting § 223.206, see the List of CFR Sections Affected, which appears in the Finding Aids section of the printed volume and at *www.fdsys.gov*.

EFFECTIVE DATE NOTES: 1. At 64 FR 14070, Mar. 23, 1999, newly redesignated § 223.206 was revised. Paragraph (d)(5) contains information collection and recordkeeping requirements and will not become effective until approval has been given by the Office of Management and Budget.

2. At 67 FR 41203, June 17, 2002, § 223.206 was amended by adding paragraph (d)(2)(v). Paragraph (d)(2)(v)(C) contains information collection and recordkeeping requirements and will not become effective until approval has been given by the Office of Management and Budget.

§ 223.207 Approved TEDs.

Any netting, webbing, or mesh that may be measured to determine compliance with this section is subject to measurement, regardless of whether it is wet or dry. Any such measurement will be of the stretched mesh size.

(a) *Hard TEDs.* Hard TEDs are TEDs with rigid deflector grids and are categorized as ''hooped hard TEDs'' and ''single-grid hard TEDs'' such as the Matagorda and Georgia TED (Figures 3 & 4 to this part). Hard TEDs complying with the following generic design criteria are approved TEDs:

(1) *Construction materials*—(i) *Single-grid and inshore hooped hard TED.* A single-grid hard TED or an inshore hooped hard TED must be constructed of one or a combination of the following materials, unless otherwise specifically restricted below, with minimum dimensions as follows:

(A) Solid steel rod with a minimum outside diameter of ¼ inch (0.64 cm);

(B) Fiberglass or aluminum rod with a minimum outside diameter of ½ inch (1.27 cm); or

(C) Steel or aluminum round, oval, or rectangular tubing with a minimum outside diameter or width of ½ inch (1.27 cm) and a minimum wall thickness of ⅛ inch (0.32 cm; also known as schedule 40 tubing).

(D) Steel or aluminum flat bar with dimensions no less than ¼ inch (0.64 cm) in thickness by 1½ inches (3.85 cm) in depth. For flat bar less than ⅜ inch (0.95 cm) in thickness, a horizontal brace bar to reinforce the deflector bars must be permanently attached to the frame and the rear face of each of the deflector bars within 4 inches (10.2 cm) of the midpoint of the TED frame. The horizontal brace bar must be constructed of approved material consistent with paragraph (a)(1)(i) of this section. The horizontal brace bar may be offset behind the deflector bars, using spacer bars, not to exceed 5 inches (12.7 cm) in length and constructed of the same size or larger flat bar as the deflector bars.

(ii) *Offshore hooped hard TED.* An offshore hooped hard TED must be constructed of aluminum, with minimum dimensions as follows:

(A) Solid rod with a minimum outside diameter of ⅝ inch (1.59 cm); or

(B) Tubing with a minimum outside diameter of 1 inch (2.54 cm) and a minimum wall thickness of ⅛ inch (0.32 cm).

(2) *Method of attachment.* A hard TED must be sewn into the trawl around the entire circumference of the TED with heavy twine.

(3) *Angle of deflector bars.* (i) The angle of the deflector bars must be between 30° and 55° from the normal, horizontal flow through the interior of the trawl, except as provided in paragraph (a)(3)(ii) of this section.

(ii) For any shrimp trawler fishing in the Gulf SFSTCA or the Atlantic SFSTCA, a hard TED with the position of the escape opening at the bottom of the net when the net is in its deployed position, the angle of the deflector bars from the normal, horizontal flow through the interior of the trawl, at any point, must not exceed 55°, and the angle of the bottom-most 4 inches (10.2 cm) of each deflector bar, measured along the bars, must not exceed 45° (Figures 14a and 14b to this part).

(4) *Space between bars.* The space between deflector bars and the deflector bars and the TED frame must not exceed 4 inches (10.2 cm).

(5) *Direction of bars.* The deflector bars must run from top to bottom of the TED, as the TED is positioned in the net, except that up to four of the bottom bars and two of the top bars, including the frame, may run from side

to side of the TED. The deflector bars must be permanently attached to the TED frame or to the horizontal bars, if used, at both ends.

(6) *Position of the escape opening*. The escape opening must be made by removing a rectangular section of webbing from the trawl, except for a TED with an escape opening size described at paragraph (a)(7)(ii)(A) for which the escape opening may alternatively be made by making a horizontal cut along the same plane as the TED. The escape opening must be centered on and immediately forward of the frame at either the top or bottom of the net when the net is in the deployed position. The escape opening must be at the top of the net when the slope of the deflector bars from forward to aft is upward, and must be at the bottom when such slope is downward. The passage from the mouth of the trawl through the escape opening must be completely clear of any obstruction or modification, other than those specified in paragraph (d) of this section.

(7) *Size of escape opening*—(i) *Hooped hard TEDs*—(A) *Escape opening for inshore hooped hard TED*. The inshore hooped hard TED escape opening must have a horizontal measurement of no less than 35 inches (89 cm) wide and a forward measurement of no less than 27 inches (69 cm). A hinged door frame may be used to partially cover the escape opening as provided in paragraph (d)(7) of this section. Alternatively, a webbing flap may be used as provided in paragraph (d)(3)(i) of this section. The resultant opening with a webbing flap must be a minimum width of 35 inches (89 cm) and a minimum height of 20 inches (51 cm), with each measurement taken simultaneously. This opening may only be used in inshore waters, except it may not be used in the inshore waters of Georgia and South Carolina.

(B) *Escape opening for offshore hooped hard TED*. The offshore hooped hard TED escape opening must have a horizontal measurement of no less than 40 inches (102 cm) wide and a forward measurement of no less than 35 inches (89 cm). A hinged door frame may be used to partially cover the escape opening as provided in paragraph (d)(7) of this section. Alternatively, a webbing flap may be used as provided in paragraph (d)(3)(ii) of this section. The resultant escape opening with a webbing flap must have a stretched mesh circumference of no less than 142 inches (361 cm).

(ii) *Single-grid hard TEDs*. On a single-grid hard TED, the horizontal cut(s) for the escape opening may not be narrower than the outside width of the TED frame minus 4 inches (10.2 cm) on both sides of the grid, when measured as a straight line width. Fore-and-aft cuts to remove a rectangular piece of webbing must be made from the ends of the horizontal cuts along a single row of meshes along each side. The overall size of the escape opening must match one of the following specifications:

(A) *44–inch inshore opening*. The escape opening must have a minimum width of 44 inches (112 cm) and a minimum height of 20 inches (51 cm) with each measurement taken separately. A webbing flap, as described in paragraph (d)(3)(i) of this section, may be used with this escape hole, so long as this minimum opening size is achieved. This opening may only be used in inshore waters, except it may not be used in the inshore waters of Georgia and South Carolina.

(B) *The 71–inch offshore opening*: The two forward cuts of the escape opening must not be less than 26 inches (66 cm) long from the points of the cut immediately forward of the TED frame. The resultant length of the leading edge of the escape opening cut must be no less than 71 inches (181 cm) with a resultant circumference of the opening being 142 inches (361 cm) (Figure 12 to this part). A webbing flap, as described in paragraph (d)(3)(ii) of this section, may be used with this escape hole, so long as this minimum opening size is achieved. Either this opening or the one described in paragraph (a)(7)(ii)(C) of this section must be used in all offshore waters and in all inshore waters in Georgia and South Carolina, but may also be used in other inshore waters.

(C) *Double cover offshore opening*. The two forward cuts of the escape opening must not be less than 20 inches (51 cm) long from the points of the cut immediately forward of the TED frame. The resultant length of the leading edge of the escape opening cut must be no less

than 56 inches (142 cm)(Figure 16 to this part illustrates the dimensions of these cuts). A webbing flap, as described in paragraph (d)(3)(iii) of this section, may be used with this escape hole. Either this opening or the one described in paragraph (a)(7)(ii)(B) of this section must be used in all offshore waters but also in all inshore waters in Georgia and South Carolina, and may be used in other inshore waters.

(D) *Boone Wedge Cut opening.* (Figure 17 to this part). The escape opening is made by making two cuts in the TED extension; one cut is fore and aft (i.e., along the length of the extension) and the other cut is horizontal to the extension. The horizontal cut is 50 meshes long and begins at a point 4 inches (10.2 cm) inward from the outside edge of the grid on one side and runs to the same point on the opposite side of the grid. The fore and aft cut begins in the middle of the horizontal cut and runs forward 49.5 inches (125.7 cm) toward the front edge of the TED extension. The added wedge of webbing is attached along its two leading edges to the edges of the fore and aft cut. The webbing wedge is made of 1⅞ inch (4.8 cm) webbing and must have at least 41 meshes measuring at least 72 inches wide (182.9 cm) along its base (aft edge). The height of the wedge must measure at least 48.5 inches (123 cm). The top of the wedge is two bars across the leading edge then cut with a 1 point then 6 bar taper. A webbing flap, as described in paragraph (d)(3)(iv) of this section, may be used with this escape opening, so long as the minimum opening size is achieved.

(E) *Large TED openings.* (Figures 18a, 18b, and 18c to this part). Large TED escape openings may be utilized in the following configurations:

(*1*) A triangular cut (Figure 18a to this part), where the base of the triangle is defined by a straight-line measurement of the opening between the webbing attachment points on the TED frame that is no less than 40 inches (102 cm). The two side cuts of the triangle must be an all-bar taper from the point at which the webbing attaches to the TED frame to the apex of the triangle cut. Each side cut of the triangle must measure no less than 53 inches (135 cm). The sum of the straight-line base measurement and two side cuts must be no less than 147 inches (373 cm). The side cuts of the triangular opening may be reinforced using rib lines attached from the TED frame to the apex of the opening. A webbing flap, as described in either paragraph (d)(3)(ii) or (d)(3)(iii) of this section, may be used with this escape opening, so long as the minimum opening size is achieved.

(*2*) All-bar or all-points side cuts and a horizontal leading edge cut (Figures 18b and 18c to this part), where the straight-line measurement of the opening between the webbing attachment points on the TED frame may not be less than 40 inches (102 cm), and the two side cuts of the escape opening must not be less than 26 inches (66 cm) long from the points of the cut immediately forward of the TED frame. Only all-bar or all-points side cuts may be used; no combination tapers may be used when making the side cuts. The sum of the straight-line base measurement and the stretched measurements of the side cuts and leading edge cut must be no less than 147 inches (373 cm). A webbing flap, as described in either paragraph (d)(3)(ii) or (d)(3)(iii) of this section, may be used with this escape opening, so long as the minimum opening size is achieved.

(8) *Size of hoop or grid*—(i) *Hooped hard TED*—(A) *Inshore hooped hard TED.* The front hoop on an inshore hooped hard TED must have an inside horizontal measurement of at least 35 inches (89 cm) and an inside vertical measurement of at least 30 inches (76 cm). The minimum clearance between the deflector bars and the forward edge of the escape opening must be at least 20 inches (51 cm).

(B) *Offshore hooped hard TED.* The front hoop on an offshore hooped hard TED must have an inside horizontal measurement of at least 40 inches (102 cm) and an inside vertical measurement of at least 30 inches (76 cm). The minimum clearance between the deflector bars and the forward edge of the escape opening must be at least 23¼ inches (59 cm).

(ii) *Single-grid hard TED.* A single-grid hard TED must have a minimum

outside horizontal and vertical measurement of 32 inches (81 cm). The required outside measurements must be at the mid-point of the deflector grid.

(9) *Flotation.* Floats must be attached to the top one-half of all hard TEDs with bottom escape openings. The floats may be attached either outside or inside the net, but not to a flap. Floats attached inside the net must be behind the rear surface of the TED. Floats must be attached with heavy twine or rope. Floats must be constructed of aluminum, hard plastic, expanded polyvinyl chloride, or expanded ethylene vinyl acetate unless otherwise specified. The requirements of this paragraph may be satisfied by compliance with either the dimension requirements of paragraph (a)(9)(i) of this section, or the buoyancy requirements of paragraph (a)(9)(ii) of this section, or the buoyancy-dimension requirements of paragraph (a)(9)(iii) of this section. If roller gear is used pursuant to paragraph (d)(5) of this section, the roller gear must be included in the circumference measurement of the TED or the total weight of the TED.

(i) *Float dimension requirements.* (A) For hard TEDs with a circumference of 120 inches (304.8 cm) or more, a minimum of either one round, aluminum or hard plastic float, no smaller than 9.8 inches (25.0 cm) in diameter, or two expanded polyvinyl chloride or expanded ethylene vinyl acetate floats, each no smaller than 6.75 inches (17.2 cm) in diameter by 8.75 inches (22.2 cm) in length, must be attached.

(B) For hard TEDs with a circumference of less than 120 inches (304.8 cm), a minimum of either one round, aluminum or hard plastic float, no smaller than 9.8 inches (25.0 cm) in diameter, or one expanded polyvinyl chloride or expanded ethylene vinyl acetate float, no smaller than 6.75 inches (17.2 cm) in diameter by 8.75 inches (22.2 cm) in length, must be attached.

(ii) *Float buoyancy requirements.* Floats of any size and in any combination must be attached such that the combined buoyancy of the floats, as marked on the floats, equals or exceeds the weight of the hard TED, as marked on the TED. The buoyancy of the floats and the weight of the TED must be clearly marked on the floats and the TED as follows:

(A) *Float buoyancy markings.* Markings on floats must be made in clearly legible raised or recessed lettering by the original manufacturer. The marking must identify the buoyancy of the float in water, expressed in grams or kilograms, and must include the metric unit of measure. The marking may additionally include the buoyancy in English units. The marking must identify the nominal buoyancy for the manufactured float.

(B) *TED weight markings.* The marking must be made by the original TED manufacturer and must be permanent and clearly legible. The marking must identify the in-air, dry weight of the TED, expressed in grams or kilograms, and must include the metric unit of measure. The marking may additionally include the weight in English units. The marked weight must represent the actual weight of the individual TED as manufactured. Previously manufactured TEDs may be marked upon return to the original manufacturer. Where a TED is comprised of multiple detachable components, the weight of each component must be separately marked.

(iii) *Buoyancy-dimension requirements.* Floats of any size and in any combination, provided that they are marked pursuant to paragraph (a)(9)(ii)(A) of this section, must be attached such that the combined buoyancy of the floats equals or exceeds the following values:

(A) For floats constructed of aluminum or hard plastic, regardless of the size of the TED grid, the combined buoyancy must equal or exceed 14 lb (6.4 kg);

(B) For floats constructed of expanded polyvinyl chloride or expanded ethylene vinyl acetate, where the circumference of the TED is 120 inches (304.8 cm) or more, the combined buoyancy must equal or exceed 20 lb (9.1 kg); or

(C) For floats constructed of expanded polyvinyl chloride or expanded ethylene vinyl acetate, where the circumference of the TED is less than 120 inches (304.8 cm), the combined buoyancy must equal or exceed 10 lb (4.5 kg).

(b) *Special Hard TEDs*. Special hard TEDs are hard TEDs which do not meet all of the design and construction criteria of the generic standards specified in paragraph (a) of this section. The following special hard TEDs are approved TEDs:

(1) *Flounder TED*. (Figure 10 to this part). The Flounder TED is approved for use only in the Atlantic summer flounder bottom trawl fishery. The Flounder TED is not an approved TED for use by shrimp trawlers. The Flounder TED must be constructed of at least 1¼ inch (3.2 cm) outside diameter aluminum or steel pipe with a wall thickness of at least ⅛ inch (0.3 cm). It must have a rectangular frame with outside dimensions which can be no less than 51 inches (129.5 cm) in length and 32 inches (81.3 cm) in width. It must have at least five vertical deflector bars, with bar spacings of no more than 4 inches (10.2 cm). The vertical bars must be connected to the top of the frame and to a single horizontal bar near the bottom. The horizontal bar must be connected at both ends to the sides of the frame and parallel to the bottom bar of the frame. There must be a space no larger than 10 inches (25.4 cm) between the horizontal bar and the bottom bar of the frame. One or more additional vertical bars running from the bottom bar to the horizontal bar must divide the opening at the bottom into two or more rectangles, each with a maximum height of 10 inches (25.4 cm) and a maximum width of 14½ inches (36.8 cm). This TED must comply with paragraph (a)(2) of this section. The angle of the deflector bars must be between 30 and 55 from the normal, horizontal flow through the interior of the trawl. The entire width of the escape opening from the trawl must be centered on and immediately forward of the frame at the top of the net when the net is in its deployed position. The escape opening must be at the top of the net and the slope of the deflector bars from forward to aft is upward. The escape opening must be cut horizontally along the same plane as the TED, and may not be cut in a fore-and-aft direction. The cut in the trawl webbing for the escape opening cannot be narrower than the outside width of the grid minus 4 inches (10.2 cm) on both sides of the grid, when measured as a straight line width. The resulting escape opening in the net webbing must measure at least 35 inches (88.9 cm) in horizontal taut length and, simultaneously, 12 inches (30.5 cm) in vertical taut height. The vertical measurement must be taken at the midpoint of the horizontal measurement. This TED may not be configured with a bottom escape opening. Installation of an accelerator funnel is not permitted with this TED.

(2) *Weedless TED*. The weedless TED must meet all the requirements of paragraph (a) of this section for single-grid hard TEDs, with the exception of paragraphs (a)(1) and (a)(5) of this section. The weedless TED must be constructed of at least 1–1/4 inch (3.2 cm) outside diameter aluminum with a wall thickness of at least ⅛ inch (0.3 cm). The deflector bars must run from top to bottom of the TED, as the TED is positioned in the net. The ends of the deflectors bars on the side of the frame opposite to the escape opening must be permanently attached to the frame. The ends of the deflector bars nearest the escape opening are not attached to the frame and must lie entirely forward of the leading edge of the outer frame. The ends of the unattached deflector bars must be no more than 4 inches (10.2 cm) from the frame and may not extend past the frame. A horizontal brace bar to reinforce the deflector bars, constructed of the same size or larger pipe as the deflector bars, must be permanently attached to the frame and the rear face of each of the deflector bars at a position anywhere between the vertical mid-point of the frame and the unattached ends of the deflector bars. The horizontal brace bar may be offset behind the deflector bars, using spacer bars, not to exceed 5 inches (12.7 cm) in length and constructed of the same size or larger pipe as the deflector bars. See Figure 15.

(3) *Boone Big Boy TED*. The Boone Big Boy TED is a single-grid hard TED with a minimum outside horizontal and vertical measurement of 36.5 inches (92.7 cm) and 48 inches (121.9 cm), respectively. The frame must be constructed of steel rod with a minimum outside diameter of ⅜ inch (0.95

cm). The deflector bars must be constructed of steel rod with a minimum outside diameter of ¼ inch (0.64 cm). The space between the deflector bars must not exceed 4 inches (10.2 cm). A horizontal brace bar constructed of at least ¼-inch (0.64-cm) steel rod must be permanently attached to the frame and the rear face of each of the deflector bars within 4 inches (10.2 cm) of the midpoint of the TED frame. The horizontal brace bar may be offset behind the deflector bars, using spacer bars, not to exceed 5 inches (12.7 cm) in length and must be constructed of the same size or larger material as the deflector bars. The Boone Big Boy TED must be used with the Boone Wedge Cut escape opening specified in (a)(7)(ii)(D) of this section. The angle of the deflector bars must be between 30° and 55° from the normal, horizontal flow through the interior of the trawl. The Boone Big Boy TED is exempt from the requirements of paragraph (a)(3)(ii) of this section, and may be installed at 55° when fishing in the Gulf SFSTCA or the Atlantic SFSTCA.

(4) *Modified flounder TED*. (Figure 11 to this part). The modified flounder TED is approved for use only in the Atlantic summer flounder bottom trawl fishery. The modified flounder TED is not an approved TED for use by shrimp trawlers. The modified flounder TED incorporates two separate grid frames that are attached together. The frames of the grids must be constructed of at least 1¼ inch (3.2 cm) outside diameter aluminum or steel pipe with a wall thickness of at least ⅛ inch (0.32 cm). Each of the two grids of the modified flounder TED must have outside dimensions of at least 36 inches (91.4 cm) in height and at least 48 inches (121.9 cm) in width. The upper grid is equipped with vertical deflector bars, which must be constructed of aluminum or steel flat bar with a minimum depth of 1¼ inches (3.2 cm) and a minimum thickness of ⅜ inch (0.95 cm). Vertical deflector bars must be connected to the top and bottom of the upper grid. The space between the deflector bars of the upper grid must not exceed 4 inches (10.2 cm). The lower grid is fabricated with both horizontal and vertical deflector bars, creating four narrow horizontal openings at the top, and three large rectangular openings along the bottom of the grid. The lower grid must have at least three horizontal deflector bars, constructed of aluminum or steel flat bar with a minimum depth of 1½ inches (3.8 cm) and a minimum thickness of ⅜ inch (0.95 cm), which are connected to each side of the grid and angled at 30° from the horizontal plane. Below this, a fourth horizontal deflector bar must be constructed of aluminum or steel pipe with a wall thickness of at least ⅛ inch (0.32 cm) and with a 1¼ inch (3.2 cm) outside diameter. These horizontal deflector bars must yield maximum spacings of 4½ inches (11.4 cm), 5½ inches (14.0 cm), 5½ inches (14.0 cm), and 4½ inches (11.4 cm), as constructed from top to bottom and measured between the leading edges of adjacent deflector bars. There must be a maximum 10-inch (25.4 cm) space between the bottom-most horizontal deflector pipe bar and the grid frame bottom. Two additional vertical pipe sections running from the bottom of the grid frame to the bottom-most horizontal deflector pipe bar must divide the opening at the bottom into three rectangles, each with a maximum height of 10 inches (25.4 cm) and a maximum width of 14 inches (35.6 cm). This TED must comply with paragraph (a)(2) of this section. The upper and lower grids of this TED must be laced together with heavy twine no less than ¼ inch (0.64 cm) in diameter in order to maintain a consistent angle in both sections. There may be a gap between the two sections not to exceed 1 inch (2.54 cm). The angle of the entire TED frame must be between 30° and 45° from the normal, horizontal flow through the interior of the trawl. The entire width of the escape opening from the trawl must be centered on and immediately forward of the frame at the top of the net when the net is in its deployed position. The slope of the grids and the vertical deflector bars from forward to aft is upward. The modified flounder TED must use an escape opening consistent with paragraph (a)(7)(ii)(B), (C), (D), or (E) of this section. A webbing flap, as described in paragraphs (d)(3)(ii), (iii), or (iv) of this section, may be used with this escape opening, so long as the minimum opening size is

achieved. This TED may not be configured with a bottom escape opening. Installation of an accelerator funnel is not permitted with this TED.

(c) *Soft TEDs*. Soft TEDs are TEDs with deflector panels made from polypropylene or polyethylene netting. The following soft TEDs are approved TEDs:

(1) *Parker TED*. The Parker TED is a soft TED, consisting of a single triangular panel, composed of webbing of two different mesh sizes, that forms a complete barrier inside a trawl and that angles toward an escape opening in the top of the trawl.

(i) *Excluder Panel*. (Figure 5 to this part) The excluder panel of the Parker TED must be constructed of a single triangular piece of 8-inch (20.3 cm) stretched mesh webbing and two trapezoidal pieces of 4-inch (10.2-cm) stretched mesh webbing. The webbing must consist of number 48 (3-mm thick) or larger polypropylene or polyethylene webbing that is heat-set knotted or braided. The leading edge of the 8-inch (20.3-cm) mesh panel must be 36 meshes wide. The 8-inch (20.3-cm) mesh panel must be tapered on each side with all-bar cuts to converge on an apex, such that the length of each side is 36 bars. The leading edges of the 4-inch (10.2-cm) mesh panels must be 8 meshes wide. The edges of the 4-inch (10.2-cm) mesh panels must be cut with all-bar cuts running parallel to each other, such that the length of the inner edge is 72 bars and the length of the outer edge is 89 bars and the resulting fore-and-aft edge is 8 meshes deep. The two 4-inch (10.2-cm) mesh panels must be sewn to the 8-inch (20.3-cm) mesh panel to create a single triangular excluder panel. The 72-bar edge of each 4-inch (10.2-cm) mesh panel must be securely joined with twine to one of the 36-bar edges of the 8-inch (20.3-cm) mesh panel, tied with knots at each knot of the 4-inch (10.2-cm) webbing and at least two wraps of twine around each bar of 4-inch (10.2-cm) mesh and the adjoining bar of the 8-inch (20.3-cm) mesh. The adjoining fore-and-aft edges of the two 4-inch (10.2-cm) mesh panels must be sewn together evenly.

(ii) *Limitations on which trawls may have a Parker TED installed*. The Parker TED must not be installed or used in a two-seam trawl with a tongue, nor in a triple-wing trawl (a trawl with a tongue along the headrope and a second tongue along the footrope). The Parker TED may be installed and used in any other trawl if the taper of the body panels of the trawl does not exceed 4b1p and if it can be properly installed in compliance with paragraph (c)(1)(iii) of this section.

(iii) *Panel installation*—(A) *Leading edge attachment*. The leading edge of the excluder panel must be attached to the inside of the bottom of the trawl across a straight row of meshes. For a two-seam trawl or a four-seam, tapered-wing trawl, the row of meshes for attachment to the trawl must run the entire width of the bottom body panel, from seam to seam. For a four-seam, straight-wing trawl, the row of meshes for attachment to the trawl must run the entire width of the bottom body panel and half the height of each wing panel of the trawl. Every mesh of the leading edge of the excluder panel must be evenly sewn to this row of meshes; meshes may not be laced to the trawl. The row of meshes for attachment to the trawl must contain the following number of meshes, depending on the stretched mesh size used in the trawl:

(*1*) For a mesh size of 2¼ inches (5.7 cm), 152–168 meshes;

(*2*) For a mesh size of 2⅛ inches (5.4 cm), 161–178 meshes;

(*3*) For a mesh size of 2 inches (5.1 cm), 171–189 meshes;

(*4*) For a mesh size of 1⅞ inches (4.8 cm), 182–202 meshes;

(*5*) For a mesh size of 1¾ inches (4.4 cm), 196–216 meshes;

(*6*) For a mesh size of 1⅝ inches (4.1 cm), 211–233 meshes;

(*7*) For a mesh size of 1½ inches (3.8 cm), 228–252 meshes;

(*8*) For a mesh size of 1⅜ inches (3.5 cm), 249–275 meshes; and

(*9*) For a mesh size of 1¼ inches (3.2 cm), 274–302 meshes.

(B) *Apex attachment*. The apex of the triangular excluder panel must be attached to the inside of the top body panel of the trawl at the centerline of the trawl. The distance, measured aft along the centerline of the top body panel from the same row of meshes for attachment of the excluder panel to the bottom body panel of the trawl, to

the apex attachment point must contain the following number of meshes, depending on the stretched mesh size used in the trawl:

(*1*) For a mesh size of 2¼ inches (5.7 cm), 78–83 meshes;

(*2*) For a mesh size of 2⅛ inches (5.4 cm), 83–88 meshes;

(*3*) For a mesh size of 2 inches (5.1 cm), 87–93 meshes;

(*4*) For a mesh size of 1⅞ inches (4.8 cm), 93–99 meshes;

(*5*) For a mesh size of 1¾ inches (4.4 cm), 100–106 meshes;

(*6*) For a mesh size of 1⅝ inches (4.1 cm), 107–114 meshes;

(*7*) For a mesh size of 1½ inches (3.8 cm), 114–124 meshes;

(*8*) For a mesh size of 1⅜ inches (3.5 cm), 127–135 meshes; and

(*9*) For a mesh size of 1¼ inches (3.2 cm), 137–146 meshes.

(C) *Side attachment*. The sides of the excluder panel must be attached evenly to the inside of the trawl from the outside attachment points of the excluder panel's leading edge to the apex of the excluder panel. Each side must be sewn with the same sewing sequence, and, if the sides of the excluder panel cross rows of bars in the trawl, the crossings must be distributed evenly over the length of the side attachment.

(iv) *Escape opening*. The escape opening for the Parker soft TED must match one of the following specifications:

(A) *Inshore opening*. This opening is the minimum size opening that may be used in inshore waters, except it may not be used in the inshore waters of Georgia and South Carolina, in which a larger minimum opening is required. A slit at least 56 inches (1.4 m) in taut length must be cut along the centerline of the top body panel of the trawl net immediately forward of the apex of the panel webbing. The slit must not be covered or closed in any manner. The edges and end points of the slit must not be reinforced in any way; for example, by attaching additional rope or webbing or by changing the orientation of the webbing.

(B) *Offshore opening*. A horizontal cut extending from the attachment of one side of the deflector panel to the trawl to the attachment of the other side of the deflector panel to the trawl must be made in a single row of meshes across the top of the trawl and measure at least 96 inches (243.8 cm) in taut width. All trawl webbing above the deflector panel between the 96-inch (243.8-cm) cut and edges of the deflector panel must be removed. A rectangular flap of nylon webbing not larger than 2-inch (5.1-cm) stretched mesh may be sewn to the forward edge of the escape opening. The width of the flap must not be larger than the width of the forward edge of the escape opening. The flap must not extend more than 12 inches (30.5 cm) beyond the rear point of the escape opening. The sides of the flap may be attached to the top of the trawl but must not be attached farther aft than the row of meshes through the rear point of the escape opening. One row of steel chain not larger than ¼ inch (0.64 cm) may be sewn evenly to the back edge of the flap. The stretched length of the chain must not exceed 96 inches (244 cm). A Parker TED using the escape opening described in this paragraph meets the requirements of § 223.206(d)(2)(iv)(B). This opening or one that is larger must be used in all offshore waters and in the inshore waters of Georgia and South Carolina. It also may be used in other inshore waters..

(2) [Reserved]

(d) *Allowable modifications to hard TEDs and special hard TEDs*. Unless otherwise prohibited in paragraph (b) of this section, only the following modifications may be made to an approved hard TED or an approved special hard TED:

(1) *Floats*. In addition to floats required pursuant to paragraph (a)(9) of this section, floats may be attached to the top one-half of the TED, either outside or inside the net, but not to a flap. Floats attached inside the net must be behind the rear surface at the top of the TED.

(2) *Accelerator funnel*. An accelerator funnel may be installed in the trawl, if it is made of net webbing material with a stretched mesh size of not greater than 1⅝ inches (4 cm), if it is inserted in the net immediately forward of the TED, and if its rear edge does not extend past the bars of the TED. The trailing edge of the accelerator funnel may be attached to the TED on the

side opposite the escape opening if not more than one-third of the circumference of the funnel is attached, and if the inside horizontal opening as described above in maintained. In a bottom opening TED only the top one-third of the circumference of the funnel may be attached to the TED. In a top opening TED only the bottom one-third of the circumference of the funnel may be attached to the TED.

(i) In inshore waters, other than the inshore waters of Georgia and South Carolina in which a larger opening is required, the inside horizontal opening of the accelerator funnel must be at least 44 inches (112 cm).

(ii) In offshore waters and the inshore waters of Georgia and South Carolina, the inside horizontal opening of the accelerator funnel must be at least 71 inches (180 cm).

(3) *Webbing flap.* A webbing flap may be used to cover the escape opening under the following conditions: No device holds it closed or otherwise restricts the opening; it is constructed of webbing with a stretched mesh size no larger than 2 inches (5.1 cm); it lies on the outside of the trawl; it is attached along its entire forward edge forward of the escape opening; it is not attached on the sides beyond the row of meshes that lies 6 inches (15.2 cm) behind the posterior edge of the grid; the sides of the flap are sewn on the same row of meshes fore and aft; and the flap does not overlap the escape hole cut by more than 5 inches (12.7 cm) on either side.

(i) *44–inch inshore TED flap.* This flap may not extend more than 24 inches (61 cm) beyond the posterior edge of the grid.

(ii) *71–inch offshore TED Flap.* The flap must be a 133–inch (338–cm) by 52–inch (132–cm) piece of webbing. The 133–inch (338–cm) edge of the flap is attached to the forward edge of the opening (71–inch (180–cm) edge). The flap may extend no more than 24 inches (61 cm) behind the posterior edge of the grid (Figure 12 to this part illustrates this flap).

(iii) *Double cover offshore TED flap.* This flap must be composed of two equal size rectangular panels of webbing. Each panel must be no less than 58 inches (147.3 cm) wide and may overlap each other no more than 15 inches (38.1 cm). The panels may only be sewn together along the leading edge of the cut. The trailing edge of each panel must not extend more than 24 inches (61 cm) past the posterior edge of the grid (Figure 16 to this part). Each panel may be sewn down the entire length of the outside edge of each panel. Paragraph (d)(3) of this section notwithstanding, this flap may be installed on either the outside or inside of the TED extension. For interior installation, the flap may be sewn to the interior of the TED extension along the leading edge and sides to a point intersecting the TED frame; however, the flap must be sewn to the exterior of the TED extension from the point at which it intersects the TED frame to the trailing edge of the flap. Chafing webbing described in paragraph (d)(4) of this section may not be used with this type of flap.

(iv) *Boone Wedge Cut opening flap.* (Figure 17 to this part). This escape opening flap is attached to the trailing edge of the horizontal cut and the wedge. The flap is made from a piece of 1⅞ inch (4.8 cm) webbing that is trapezoid in shape. The leading edge must be at least 94 meshes wide, stretching to at least 164.5 inches (417.8 cm). The trailing edge is at least 87 meshes wide and at least 152 inches (386.1 cm). The two sides are at least 8 meshes long and at least 15 inches (38.1 cm). The escape opening flap is attached only to the leading edge of the escape opening cut and is not attached along its sides.

(A) *Edge lines.* Optional edge lines can be used in conjunction with this flap. The line must be made of polyethylene with a maximum diameter of ⅜ inches (.95 cm). A single length of line must be used for each flap panel. The line must be sewn evenly to the unattached, inside edges and trailing edges, of each flap panel. When edge lines are installed, the outside edge of each flap panel must be attached along the entire length of the flap panel.

(B) [Reserved]

(4) *Chafing webbing.* A single piece of nylon webbing, with a twine size no smaller than size 36 (2.46 mm in diameter), may be attached outside of the escape opening webbing flap to prevent chafing on bottom opening TEDs. This

webbing may be attached along its leading edge only. This webbing may not extend beyond the trailing edge or sides of the existing escape opening webbing flap, and it must not interfere or otherwise restrict the turtle escape opening.

(5) *Roller gear*. Roller gear may be attached to the bottom of a TED to prevent chafing on the bottom of the TED and the trawl net. When a webbing flap is used in conjunction with roller gear, the webbing flap must be of a length such that no part of the webbing flap can touch or come in contact with any part of the roller gear assembly or the means of attachment of the roller gear assembly to the TED, when the trawl net is in its normal, horizontal position. Roller gear must be constructed according to one of the following design criteria:

(i) A single roller consisting of hard plastic shall be mounted on an axle rod, so that the roller can roll freely about the axle. The maximum diameter of the roller shall be 6 inches (15.24 cm), and the maximum width of the axle rod shall be 12 inches (30.4 cm). The axle rod must be attached to the TED by two support rods. The maximum clearance between the roller and the TED shall not exceed 1 inch (2.5 cm) at the center of the roller. The support rods and axle rod must be made from solid steel or solid aluminum rod no larger than ½ inch (1.28 cm) in diameter. The attachment of the support rods to the TED shall be such that there are no protrusions (lips, sharp edges, burrs, etc.) on the front face of the grid. The axle rod and support rods must lie entirely behind the plane of the face of the TED grid.

(ii) A single roller consisting of hard plastic tubing shall be tightly tied to the back face of the TED grid with rope or heavy twine passed through the center of the roller tubing. The roller shall lie flush against the TED. The maximum outside diameter of the roller shall be 3½ inches (8.0 cm), the minimum outside diameter of the roller shall be 2 inches (5.1 cm), and the maximum length of the roller shall be 12 inches (30.4 cm). The roller must lie entirely behind the plane of the face of the grid.

(6) *Water deflector fin for hooped hard TEDs*. On a hooped hard TED, a water deflector fin may be welded to the forward edge of the escape opening. The fin must be constructed of a flat aluminum bar, up to ⅜ inch (0.95 cm) thick and up to 4 inches (10.2 cm) deep. The fin may be as wide as the width of the escape opening, minus 1 inch (2.5 cm). The fin must project aft into the TED with an angle between 5° and 45° from the normal, horizontal plane of the trawl. On an inshore hooped hard TED, the clearance between the deflector bars and the posterior edge of the deflector fin must be at least 20 inches (51 cm). On an offshore hooped hard TED, the clearance between the deflector bars and the posterior edge of the deflector fin must be at least 23–1/4 inches (59 cm).

(7) *Hinged door frame for hooped hard TEDs*. A hinged door frame may be attached to the forward edge of the escape opening on a hooped hard TED. The door frame must be constructed of materials specified at paragraphs (a)(1)(i) or (a)(1)(ii) of this section for inshore and offshore hooped hard TEDs, respectively. The door frame may be covered with a single panel of mesh webbing that is taut and securely attached with twine to the perimeter of the door frame, with a mesh size not greater than that used for the TED extension webbing. The door frame must be at least as wide as the TED escape opening. The door frame may be a maximum of 24 inches (61 cm) long. The door frame must be connected to the forward edge of the escape opening by a hinge device that allows the door to open outwards freely. The posterior edge of the door frame, in the closed position, must lie at least 12 inches (30 cm) forward of the posterior edge of the escape opening. A water deflector fin may be welded to the posterior edge of the hinged door frame. The fin must be constructed of a flat aluminum bar, up to ⅜ inch (0.95 cm) thick and up to four inches (10.2 cm) deep. The fin may be as wide as the width of the escape opening, minus one inch (2.5 cm). The fin must project aft into the TED with an angle between 5° and 45° from the normal, horizontal plane of the trawl, when the door is in the closed position. The clearance between the posterior

edge of the escape opening and the posterior edge of the door frame or the posterior edge of the water deflector fin, if installed, must be no less than 12 inches (30 cm), when the door is in the closed position. Two stopper ropes or a hinge limiter may be used to limit the maximum opening height of the hinged door frame, as long as they do not obstruct the escape opening in any way or restrict the free movement of the door to its fully open position. When the door is in its fully open position, the minimum clearance between any part of the deflector bars and any part of the door, including a water deflector fin if installed, must be at least 20 inches (51 cm) for an inshore hooped hard TED and at least 23¼ inches (59 cm) for an offshore hooped hard TED. The hinged door frame may not be used in combination with a webbing flap specified at paragraph (d)(3) of this section or with a water deflection fin specified at paragraph (d)(6) of this section.

(8) *Chauvin shrimp deflector*. (Figures 19a and 19b to this part). The Chauvin shrimp deflector may be used on any approved TED design, but its installation must not reduce the minimum stretched measurements of the TED opening. The Chauvin shrimp deflector may not be installed with a bottom escape opening. The Chauvin shrimp deflector is constructed from a single piece of 3-inch (7.6-cm) inside diameter PVC pipe which measures 30 inches (76.2 cm) in length; the ends of the PVC pipe are left uncapped. A webbing or mesh bag is made and is used to encase the PVC pipe (Figure 19a to this part). The mesh bag is created using a single piece of 1⅝ inch (4.1 cm) stretched-mesh webbing made of nylon or polyethylene with dimensions 57 meshes wide by 10 meshes deep. The leading edge of the 57-mesh piece of webbing is attached around the PVC pipe and back to the row of meshes located 7 meshes down the 10-mesh length. The ends of the webbing are sewn together on each end forming a webbing bag to assure the PVC pipe remains encased in the webbing. This leaves a 3-mesh tail hanging from the encased PVC pipe. The 3-mesh tail of the encased PVC pipe is then sewn to a single row of meshes on the inside of the trawl along the 57-mesh edge, 3 meshes ahead of the forward cut of the TED escape opening. This would allow a 3-mesh overlap to the left and right of the forward cut (Figure 19b to this part).

(9) *Brace bar*. (Figure 14a of this part). A horizontal brace bar may be added to a TED if the brace bar is constructed of aluminum or steel rod or tubing specified in 50 CFR 223.207(a)(1)(i)(A) through (C), or flat bar ⅜-inch (0.95 cm) or more in thickness, and is permanently attached to the rear of the outer frame; for TEDs constructed of flat bar less than ⅜-inch (0.95 cm) in thickness, the regulations specified in 50 CFR 223.207(a)(1)(i)(D) apply. The horizontal brace bar may be permanently secured to the rear face of each of the deflector bars. The horizontal brace bar may be offset behind the deflector bars, using spacer bars attached to the rear face of each of the deflector bars, not to exceed 5 inches (12.7 cm) in length, and must be constructed of the same size or larger material as the deflector bars.

(e) *Revision of generic design criteria, and approval of TEDs, of allowable modifications of hard TEDs, and of special hard TEDs*. (1) The Assistant Administrator may revise the generic design criteria for hard TEDs set forth in paragraph (a) of this section, may approve special hard TEDs in addition to those listed in paragraph (b) of this section, may approve allowable modifications to hard TEDs in addition to those authorized in paragraph (d) of this section, or may approve other TEDs, by regulatory amendment, if, according to a NMFS-approved scientific protocol, the TED demonstrates a sea turtle exclusion rate of 97 percent or greater (or an equivalent exclusion rate). Two such protocols have been published by NMFS (52 FR 24262, June 29, 1987; and 55 FR 41092, October 9, 1990) and will be used only for testing relating to hard TED designs. Testing under any protocol must be conducted under the supervision of the Assistant Administrator, and shall be subject to all such conditions and restrictions as the Assistant Administrator deems appropriate. Any person wishing to participate in such testing should contact the Director, Southeast Fisheries Science Center, NMFS, 75 Virginia Beach Dr., Miami, FL 33149–1003.

(2) Upon application, the Assistant Administrator may issue permits, subject to such conditions and restrictions as the Assistant Administrator deems appropriate, authorizing public or private experimentation aimed at improving shrimp retention efficiency of existing approved TEDs and at developing additional TEDs, or conducting fishery research, that would otherwise be subject to § 223.206(d)(2). Applications should be made to the Southeast Regional Administrator (see § 222.102 definition of ''Southeast Regional Administrator'').

[64 FR 14073, Mar. 23, 1999, as amended at 64 FR 55438, Oct. 13, 1999; 66 FR 1603, Jan. 9, 2001; 66 FR 24288, May 14, 2001; 68 FR 8467, Feb. 21, 2003; 68 FR 51514, Aug. 27, 2003; 68 FR 54934, Sept. 19, 2003; 69 FR 31037, June 2, 2004; 77 FR 29907, May 21, 2012; 77 FR 48106, Aug. 13, 2012]

EFFECTIVE DATE NOTE: At 64 FR 14073, Mar. 23, 1999, § 223.207 was added. Paragraphs (a)(9)(ii) (A) and (B) contain information collection and recordkeeping requirements and will not become effective until approval has been given by the Office of Management and Budget.

§ 223.208 Corals.

(a) *Prohibitions.* (1) The prohibitions of section 9(a)(1) of the ESA (16 U.S.C. 1538(a)(1)) relating to endangered species apply to elkhorn (*Acropora palmata*) and staghorn (*A. cervicornis*) corals listed as threatened in § 223.102, except as provided in § 223.208(c).

(2) It is unlawful for any person subject to the jurisdiction of the United States to do any of the following:

(i) Fail to comply immediately, in the manner specified at § 600.730 (b) through (d) of this title, with instructions and signals specified therein issued by an authorized officer, including instructions and signals to haul back a net for inspection;

(ii) Refuse to allow an authorized officer to board a vessel, or to enter an area where fish or wildlife may be found, for the purpose of conducting a boarding, search, inspection, seizure, investigation, or arrest in connection with enforcement of this section;

(iii) Destroy, stave, damage, or dispose of in any manner, fish or wildlife, gear, cargo, or any other matter after a communication or signal from an authorized officer, or upon the approach of such an officer or of an enforcement vessel or aircraft, before the officer has an opportunity to inspect same, or in contravention of directions from the officer;

(iv) Assault, resist, oppose, impede, intimidate, threaten, obstruct, delay, prevent, or interfere with an authorized officer in the conduct of any boarding, search, inspection, seizure, investigation, or arrest in connection with enforcement of this section;

(v) Interfere with, delay, or prevent by any means, the apprehension of another person, knowing that such person committed an act prohibited by this section;

(vi) Resist a lawful arrest for an act prohibited by this section;

(vii) Make a false statement, oral or written, to an authorized officer or to the agency concerning applicability of the exceptions enumerated in paragraph (c) of this section relating to elkhorn and staghorn corals;

(viii) Make a false statement, oral or written, to an authorized officer or to the agency concerning the fishing for, catching, taking, harvesting, landing, purchasing, selling, or transferring fish or wildlife, or concerning any other matter subject to investigation under this section by such officer, or required to be submitted under this part 223; or

(ix) Attempt to do, solicit another to do, or cause to be done, any of the foregoing.

(b) *Affirmative defense.* In connection with any action alleging a violation of this section, any person claiming the benefit of any exception, exemption, or permit under this section has the burden of proving that the exception, exemption, or permit is applicable, was granted, and was valid and in force at the time of the alleged violation, and that the person fully complied with the exception, exemption, or permit.

(c) *Exceptions.* Exceptions to the prohibitions of section 9(a)(1) of the ESA (16 U.S.C. 1538(a)(1)) applied in paragraph (a) of this section relating to elkhorn and staghorn corals are described in the following paragraphs (1) through (6):

(1) Permitted scientific research and enhancement. Any export or take of elkhorn or staghorn corals resulting from conducting scientific research or enhancement directed at elkhorn and

staghorn corals is excepted from the prohibitions in ESA sections 9(a)(1)(A), (B) and (C) provided a valid research or enhancement permit has been obtained from one of the following Federal or state agencies: NOAA National Ocean Service National Marine Sanctuary Program, National Park Service, U.S. Fish and Wildlife Service, Florida Fish and Wildlife Conservation Commission, Puerto Rico Department of Natural and Environmental Resources, or the U.S. Virgin Islands Department of Planning and Natural Resources. The exportation or take must be in compliance with the applicable terms and conditions of the applicable research or enhancement permit, and the permit must be in the possession of the permittee while conducting the activity. Export of elkhorn or staghorn corals from the United States to conduct excepted research or enhancement activities requires a CITES export permit from the U.S. Fish and Wildlife Service in addition to the research permit for collection. Import of elkhorn or staghorn corals into the United States to conduct excepted research or enhancement activities must be in compliance with the provisions of section 9(c) of the ESA.

(2) Restoration activities. Any agent or employee of governmental agencies listed in Table 1 may take listed elkhorn or staghorn corals without a permit, when acting in the course of conducting a restoration activity directed at elkhorn or staghorn coral which is authorized by an existing authority (see Table 1 to this section). Take of elkhorn or staghorn corals during such restoration activity is excepted from the prohibitions in ESA sections 9(a)(1)(B) and (C). An excepted restoration activity is defined as the methods and processes used to provide aid to injured individual elkhorn or staghorn coral.

(3) Section 10 scientific and enhancement permits. The Assistant Administrator may issue permits authorizing activities that would otherwise be prohibited under § 223.208(a) for scientific purposes or to enhance the propagation or survival of elkhorn or staghorn corals, in accordance with and subject to the conditions of part 222, subpart C-General Permit Procedures.

(4) Section 10 incidental take permits. The Assistant Administrator may issue permits authorizing activities that would otherwise be prohibited under § 223.208(a) in accordance with section 10(a)(1)(B) of the ESA (16 U.S.C. 1539(a)(1)(B)), and in accordance with, and subject to the conditions of part 222 of this chapter. Such permits may be issued for the incidental taking of elkhorn and staghorn corals.

(5) Section 7 Interagency consultation. Any incidental taking that is in compliance with the terms and conditions specified in a written statement provided under section 7(b)(4)(C) of the ESA (16 U.S.C. 1536(b)(4)(C)) shall not be considered a prohibited taking of elkhorn and staghorn corals pursuant to paragraph (o)(2) of section 7 of the ESA (16 U.S.C. 1536(o)(2)).

(6) Importation under the Convention on International Trade of Endangered Species. Any importation of elkhorn or staghorn corals in compliance with the provisions of section 9(c) of the ESA (16 U.S.C. 1538(c)) shall not be considered a violation of any provision of the ESA or any regulation issued pursuant to the ESA.

TABLE 1 TO § 223.208. AGENCIES AND AUTHORIZING STATUTES WHOSE CORAL RESTORATION ACTIVITIES ARE EXCEPTED FROM CERTAIN PROHIBITIONS IN PARAGRAPH (a) OF THIS SECTION.

FEDERAL:	
Agency/Person	Statute and Specific Provision(s)
NOAA, National Ocean Service (NOS)	National Marine Sanctuaries Act 16 U.S.C. 1431 *et seq.*
NOAA, NOS	Coral Reef Conservation Act 16 U.S.C. 6406
Commandant, U.S. Coast Guard (USCG), Authorized representatives of States or Indian Tribes..	"Oil Pollution Act" 33 U.S.C. 2702

TABLE 1 TO § 223.208. AGENCIES AND AUTHORIZING STATUTES WHOSE CORAL RESTORATION ACTIVITIES ARE EXCEPTED FROM CERTAIN PROHIBITIONS IN PARAGRAPH (a) OF THIS SECTION.—Continued

FEDERAL:	
Agency/Person	Statute and Specific Provision(s)
Designated Federal, State or Indian tribal natural resources trustees, including NOAA, Department of Interior (DOI), Florida Department of Environmental Protection (FDEP), Puerto Rico Department of Natural and Environmental Resources (DNER), and U.S. Virgin Islands Department of Planning and Natural Resources (DPNR).	33 U.S.C. 2706
Administrator, Environmental Protection Agency (EPA) or Commandant, USCG; Authorized representatives of States..	″Clean Water Act″ 33 U.S.C. 1321
Designated Federal, State or Indian tribal natural resources trustees, including NOAA, DOI, FDEP, DNER, and DPNR..	
Administrator of the EPA; States or Indian Tribes in cooperative agreements with EPA; Heads of other Federal agencies where release is from vessel or facility solely under their control..	″Superfund Act″ (CERCLA) 42 U.S.C. 9604
Administrator of the EPA	42 U.S.C. 9606
Designated Federal, State or Indian tribal natural resources trustees, including NOAA, DOI, FDEP, DNER, and DPNR.	42 U.S.C. 9607
DOI, National Park Service (NPS)	Park System Resource Protection Act, 16 U.S.C. 19jj 16 U.S.C. 668dd–668ee (National Wildlife Refuge System)
DOI	National Wildlife Refuge System Administration Act, 16 U.S.C. 668
FLORIDA:	
The Board of Trustees of the Internal Improvement Trust Fund	State Lands; Board of Trustees to Administer FL Statute § 253.03
	Duty of Board to Protect, etc. FL Statute. § 253.04 FDEP
Governor and Cabinet; FDEP	Land Acquisition for Conservation or Recreation; Conservation and Recreation Lands Trust Fund FL Statute § 259.032
FDEP	Pollutant Discharge Prevention and Removal; Liability for Damage to Natural Resources FL Statute § 376.121
FDEP	Land and Water Management; Coral Reef Restoration FL Statute § 390.0558
Florida Fish and Wildlife Conservation Commission	Fish and Wildlife Conservation Commission FL Statute § 20.331
U.S. VIRGIN ISLANDS:	
DPNR	DPNR; Powers and Duties of Department 3 V.I.C. § 401
DPNR	Conservation; Croix East End Marine Park Established; 12 V.I.C. § 98
PUERTO RICO:	
DNER	Conservation; Protection, Conservation and Management of Coral Reefs 12 L.P.R.A. §§ 241-241g *et seq.*

TABLE 1 TO § 223.208. AGENCIES AND AUTHORIZING STATUTES WHOSE CORAL RESTORATION ACTIVITIES ARE EXCEPTED FROM CERTAIN PROHIBITIONS IN PARAGRAPH (a) OF THIS SECTION.—Continued

FEDERAL:	
Agency/Person	Statute and Specific Provision(s)
DNER	Conservation; Natural Patrimony Program 12 L.P.R.A. § 1225 *et seq.*
DNER	Conservation; Natural Resources; Declarations of Marine Reserves (and other protected areas) containing elkhorn and staghorn corals 12 L.P.R.A.; Subtitle 6A; Chapter 252; §§ 5011 *et seq.*

[73 FR 64276, Oct. 29, 2008, as amended at 79 FR 20813, Apr. 14, 2014]

§ 223.209 [Reserved]

§ 223.210 Green sturgeon.

(a) *Prohibitions*. The prohibitions of section 9(a)(1) of the ESA (16 U.S.C. 1538(a)(1)) relating to endangered species apply to the threatened Southern Distinct Population Segment (DPS) of green sturgeon listed in § 223.102.

(b) *Exceptions*. Exceptions to the take prohibitions described in section 9(a)(1) of the ESA (16 U.S.C. 1538(a)(1)) applied in paragraph (a) of this section to the threatened Southern DPS listed in § 223.102 are described in the following paragraphs (b)(1) through (b)(3).

(1) *Scientific research and monitoring exceptions*. The prohibitions of paragraph (a) of this section relating to the threatened Southern DPS listed in § 223.102 do not apply to ongoing or future Federal, state, or private-sponsored scientific research or monitoring activities if:

(1) Scientific Research and Monitoring Exceptions. The prohibitions of paragraph (a) of this section relating to the threatened Southern DPS listed in § 223.102(c)(1) do not apply to ongoing or future Federal, state, or private-sponsored scientific research or monitoring activities if:

(i) The scientific research or monitoring activity complies with required state reviews or permits;

(ii) The research or monitoring activity is directed at the Southern DPS and is not incidental to research or monitoring of another species;

(iii) Take of live mature adults in the lower Feather River from the confluence with the Sacramento River to the Oroville Dam (rkm 116), the lower Yuba River from the confluence with the Feather River to the Daguerre Dam (rkm 19), or Suisun, San Pablo, and San Francisco Bays or the Sacramento-San Joaquin Delta from the Golden Gate Bridge up into the Sacramento River to Keswick Dam (rkm 483) occurs from July 1 through March 1 so as to substantially increase the likelihood that uninterrupted upstream spawning migrations of adults will occur;

(iv) Take is non-lethal;

(v) Take involving the removal of any life stage of the Southern DPS from the wild does not exceed 60 minutes;

(vi) Take does not involve artificial spawning or enhancement activities;

(vii) A description of the study objectives and justification, a summary of the study design and methodology, estimates of the total non-lethal take of Southern DPS fish anticipated, estimates of incidental take of other ESA listed species anticipated and proof that those takes have been authorized by NMFS or the USFWS, identification of funding sources, and a point of contact is reported to the NMFS Southwest Regional Office in Long Beach at least 60 days prior to the start of the study, or by August 31, 2010 for ongoing studies;

(viii) Reports that include the total number of Southern DPS and any other ESA listed species taken, information that supports that take was non-lethal, and a summary of the project results is submitted to the NMFS Southwest Regional Office in Long Beach on a schedule to be determined by NMFS; and

(ix) Research or monitoring that involves action, permitting, or funding by a Federal agency still complies with the requirements of ESA section 7(a)(2) in order to ensure that the action will not jeopardize the continued existence of the threatened Southern DPS.

(2) *Enforcement exception*. The prohibitions of paragraph (a) of this section relating to the threatened Southern DPS listed in § 223.102 do not apply to any employee of NMFS, when the employee, acting in the course of his or her official duties, takes a Southern DPS fish listed in § 223.102 without a permit, if such action is necessary for purposes of enforcing the ESA or its implementing regulations.

(3) *Emergency fish rescue and salvage exceptions*. The prohibitions of paragraph (a) of this section relating to the threatened Southern DPS listed in § 223.102 do not apply to emergency fish rescue and salvage activities that include aiding sick, injured, or stranded fish, disposing of dead fish, or salvaging dead fish for use in scientific studies, if:

(i) The activity complies with required state or other Federal reviews or permits;

(ii) The activity is conducted by an employee or designee of NMFS or the U.S. Fish and Wildlife Service (USFWS), any Federal land management agency, or California Department of Fish and Game, Oregon Department of Fish and Wildlife, Washington Department of Fish and Wildlife, or Alaska Department of Fish and Game;

(iii) The activity benefits the Southern DPS; and

(iv) Those carrying out the activity submit a report to the NMFS Southwest Regional Office in Long Beach that includes, at a minimum, the number and status of fish handled, the location of rescue and/or salvage operations, and the potential causes(s) of the emergency situation within 10 days after conducting the emergency rescue.

(4) *Habitat restoration exceptions*. The prohibitions of paragraph (a) of this section relating to the threatened Southern DPS listed in § 223.102 do not apply to habitat restoration activities including barrier removal or modification to restore water flows, riverine or estuarine bed restoration, natural bank stabilization, restoration of native vegetation, removal of non-native species, or removal of contaminated sediments, that reestablish self-sustaining habitats for the Southern DPS, if:

(i) The activity complies with required state and Federal reviews and permits;

(ii) Those carrying out the activity submit a detailed description of the restoration activity to the NMFS Southwest Regional Office in Long Beach at least 60 days prior to the start of the restoration project, or, for ongoing studies, by August 31, 2010, which includes: the geographic area affected; when activities will occur; how they will be conducted; and the severity of direct, indirect, and cumulative impacts of activities on the Southern DPS; identification of funding sources; demonstration that all state and Federal regulatory requirements have been met; a description of methods used to ensure that the likelihood of survival or recovery of the listed species is not reduced; a plan for minimizing and mitigating any adverse impacts to Southern DPS spawning or rearing habitat; an estimate of the amount of incidental take of the listed species that may occur and a description of how that estimate was made; a plan for effective monitoring and adaptive management; a pledge to use best available science and technology when conducting restoration activities; and a point of contact;

(iii) Those carrying out the activity submit progress reports that include the total number of Southern DPS fish taken, information regarding whether the take was lethal or non-lethal, a summary of the status of the project, and any changes in the methods being used, to the NMFS Southwest Regional Office in Long Beach on a schedule to be determined by NMFS; and

(iv) An activity that involves action, permitting, or funding by a Federal agency complies with the requirements of ESA section 7(a)(2) in order to ensure that the action will not jeopardize the continued existence of the threatened Southern DPS.

(c) *Exemptions via ESA 4(d) Program Approval*. Exemptions from the take prohibitions described in section 9(a)(1) of the ESA (16 U.S.C. 1538(a)(1)) applied

in paragraph (a) of this section to the threatened Southern DPS listed in § 223.102 are described in the following paragraphs:

(1) *Scientific research and monitoring exemptions.* The prohibitions of paragraph (a) of this section relating to the threatened Southern DPS listed in § 223.102 do not apply to ongoing or future state-sponsored scientific research or monitoring activities that are part of a NMFS-approved, ESA-compliant state 4(d) research program conducted by, or in coordination with, state fishery management agencies (California Department of Fish and Game, Oregon Department of Fish and Wildlife, Washington Department of Fish and Wildlife, or Alaska Department of Fish and Game), or as part of a monitoring and research program overseen by, or coordinated by, one of these agencies. State 4(d) research programs must meet the following criteria:

(i) Descriptions of the ongoing and future 4(d) research or monitoring activity, as described in paragraph (c)(1)(ii) of this section, must be received by the NMFS Southwest Regional Office in Long Beach during the mid-September through mid-October 2010 application period. This exception to the section 9 take prohibitions expires if the proposal is rejected as insufficient or is denied. If the state 4(d) research program package is received during the mid-September to mid-October application period, ongoing state-supported scientific research activities may continue until NMFS issues a written decision of approval or denial. If approved, the state 4(d) program authorization will cover one calendar year and state-supported researchers would have to renew authorizations annually during subsequent application periods.

(ii) Descriptions of ongoing and future state-supported research activities must include the following information and should be submitted to NMFS by the State: an estimate of total direct or incidental take; a description of the study design and methodology; a justification for take and the techniques employed; and a point of contact.

(iii) NMFS will provide written approval of a state 4(d) research program.

(iv) The State agency will provide an annual report to NMFS that, at a minimum, summarizes the number of Southern DPS green sturgeon taken directly or incidentally, and summarizes the results of the project.

(2) *Fisheries exemptions.* The prohibitions of paragraph (a) of this section relating to the threatened Southern DPS listed in § 223.102 do not apply to fisheries activities that are conducted in accordance with a NMFS-approved Fishery Management and Evaluation Plan (FMEP). If NMFS finds that an FMEP meets the criteria listed below, a letter of concurrence which sets forth the terms of the FMEP's implementation and the duties of the parties pursuant to the FMEP, will be issued to the applicant.

(i) An FMEP must prohibit retention of green sturgeon (*i.e.*, zero bag limit); set maximum incidental take levels, include restrictions to minimize incidental take of the green sturgeon (*e.g.*, temporal/spatial restrictions, size of fish, gear used); provide a biologically based rationale demonstrating that the incidental take management strategy will not significantly reduce the likelihood of survival or recovery of the Southern DPS; include effective monitoring and evaluation plans; provide for evaluating monitoring data and making revisions to the FMEP; provide for effective enforcement and education; provide a timeframe for FMEP implementation; and report the amount of incidental take and summarize the effectiveness of the FMEP to NMFS on a biannual basis.

(ii) The ESA section 9(a)(1)(B) and (a)(1)(C) take prohibitions will not apply to ongoing commercial and recreational fisheries activities until September 30, 2010 if a letter of intent to develop an FMEP that is protective of green sturgeon has been received by NMFS by July 2, 2010. The exemption will expire if the letter of intent is rejected without further review of a FMEP. If the letter of intent is received by August 31, 2010, a draft FMEP must be received by NMFS within 6 months from the date of receipt of the letter of intent. A final FMEP must be received by NMFS within 3 months from the date of receipt of NMFS' comments on the draft FMEP. Ongoing

commercial and recreational fisheries activities may continue until NMFS issues a letter of concurrence or denial for final FMEPs.

(iii) NMFS will provide a public comment period (≥30 days) before approval of new or amended FMEPs; provide a letter of concurrence for approved FMEPs that specifies the implementation and reporting requirements; evaluate FMEPs every 5 years and identify changes that would improve their effectiveness; and provide a public comment period (≥30 days) before withdrawing approval of an FMEP.

(3) *Tribal exemptions.* The prohibitions of paragraph (a) of this section relating to the threatened Southern DPS listed in § 223.102 do not apply to fishery harvest or other activities undertaken by a tribe, tribal member, tribal permittee, tribal employee, or tribal agent in Willapa Bay, WA, Grays Harbor, WA, Coos Bay, OR, Winchester Bay, OR, Humboldt Bay, CA, and any other area where tribal treaty fishing occurs, if those activities are compliant with a tribal resource management plan (Tribal Plan), provided that the Secretary determines that implementation of such Tribal Plan will not appreciably reduce the likelihood of survival and recovery of the Southern DPS. In making that determination the Secretary shall use the best available biological data (including any tribal data and analysis) to determine the Tribal Plan's impact on the biological requirements of the species, and will assess the effect of the Tribal Plan on survival and recovery, consistent with legally enforceable tribal rights and with the Secretary's trust responsibilities to tribes.

(i) A Tribal Plan may include, but is not limited to, plans that address fishery harvest, artificial production, research, or water or land management, and may be developed by one tribe or jointly with other tribes. The Secretary will consult on a government-to-government basis with any tribe that so requests and will provide, to the maximum extent practicable, technical assistance in examining impacts on the Southern DPS as tribes develop Tribal Plans. A Tribal Plan must specify the procedures by which the tribe will enforce its provisions.

(ii) Where there exists a Federal court proceeding with continuing jurisdiction over the subject matter of a Tribal Plan, the plan may be developed and implemented within the ongoing Federal Court proceeding. In such circumstances, compliance with the Tribal Plan's terms shall be determined within that Federal Court proceeding.

(iii) The Secretary shall seek comment from the public on the Secretary's pending determination whether implementation of a Tribal Plan will appreciably reduce the likelihood of survival and recovery of the listed Southern DPS.

(iv) The Secretary shall publish notification in the FEDERAL REGISTER of any determination regarding a Tribal Plan and the basis for that determination.

(d) *ESA section 10 permits.* The exceptions of section 10 of the ESA (16 U.S.C. 1539) and other exceptions under the ESA relating to endangered species, including regulations in part 222 of this chapter II implementing such exceptions, also apply to the threatened Southern DPS listed in § 223.102. Federal, state, and private-sponsored research activities for scientific research or enhancement purposes that are not covered under Scientific Research and Monitoring Exceptions as described in paragraph (b)(1) of this section or Scientific Research and Monitoring Exemptions as described in paragraph (c)(1) of this section, may take Southern DPS fish pursuant to the specifications of an ESA section 10 permit.

(e) *Affirmative defense.* In connection with any action alleging a violation of the prohibitions of paragraph (a) of this section with respect to the threatened Southern DPS listed in § 223.102, any person claiming that his or her take is excepted via methods listed in paragraph (b) of this section shall have a defense where the person can demonstrate that the exception is applicable and was in force, and that the person fully complied with the exception's requirements at the time of the alleged violation. This defense is an affirmative defense that must be raised, pleaded, and proven by the proponent. If proven, this defense will be an absolute defense to liability under section

9(a)(1)(G) of the ESA with respect to the alleged violation.

[75 FR 30728, June 2, 2010, as amended at 79 FR 20813, Apr. 14, 2014]

§ 223.211 Atlantic sturgeon.

(a) *Prohibitions*. The prohibitions of sections 9(a)(1)(A) through 9(a)(1)(G) of the ESA (16 U.S.C. 1538) relating to endangered species apply to the threatened Gulf of Maine Distinct Population Segment (Gulf of Maine DPS) of Atlantic sturgeon listed in § 223.102(c)(29).

(b) [Reserved]

[78 FR 69315, Nov. 19, 2013]

§ 223.212 Southern DPS of spotted seal.

The prohibitions of section 9(a)(1) of the ESA (16 U.S.C. 1538(a)(1)) relating to endangered species shall apply to the Southern Distinct Population Segment of spotted seal listed in § 223.102.

[79 FR 20814, Apr. 14, 2014]

§§ 223.213–223.300 [Reserved]

§ 223.301 Special rules—marine and anadromous fishes.

(a) *Middle Columbia River steelhead (Oncorhynchus mykiss.)* (1) The Middle Columbia River steelhead located in the geographic areas identified in paragraph (a)(4) of this section comprise a nonessential, experimental population (NEP).

(2) *Take of this species that is allowed in the NEP area*. (i) Taking of Middle Columbia River (MCR) steelhead that is otherwise prohibited by paragraph (a)(3) of this section and 50 CFR 223.203(a), provided that the taking is unintentional; not due to negligent conduct; and incidental to, and not the purpose of, the carrying out of an otherwise lawful activity. Examples of otherwise lawful activities include recreational fishing, recreation, agriculture, forestry, municipal usage, and other similar activities, which are carried out in accordance with Federal, state, and local laws and regulations as well as applicable tribal regulations.

(ii) Handling of MCR steelhead in the NEP area by NMFS, Oregon Department of Fish and Wildlife (ODFW) and the Confederated Tribes of the Warm Springs Reservation of Oregon (CTWS) employees and authorized agents acting on their behalf for scientific purposes and by the Portland General Electric Company (PGE) and CTWS employees and authorized agents acting on their behalf for the purpose of monitoring and evaluating the ongoing reintroduction under the Federal Energy Regulatory Commission (FERC) license for the Pelton Round Butte Hydroelectric Project (FERC No. 2030).

(iii) Taking of MCR steelhead incidental to any activities related to or associated with the operation and maintenance of Pelton Round Butte Hydroelectric Project's (FERC Project No. 2030) Round Butte Dam by PGE or CTWS as administered under a license issued by FERC. Acceptable forms of taking of steelhead include, but are not limited to, mortality, stranding, injury, impingement at Round Butte Dam facilities, or delay in up- or downstream passage associated with or caused by any of the following activities. Activities related to the operation and maintenance of Round Butte Dam include, but are not limited to:

(A) Hydroelectric generation;

(B) Maintenance of project facilities;

(C) Provision of upstream and downstream fish passage,

(D) Fish handling at fish separation and counting facilities;

(E) Fish conservation activities;

(F) Fish handling, tagging, and sampling in connection with FERC approved studies; and

(G) Approved resource protection, mitigation, and enhancement measures.

(iv) Handling MCR steelhead by Deschutes Valley Water District employees and agents acting on their behalf for the purpose of monitoring and evaluating the Opal Springs Hydroelectric Project (FERC No. 5891).

(v) Take incidental to any activities related to or associated with the operation and maintenance of the Opal Springs Hydroelectric Project (FERC Project No. 5891) as administered under a license issued by FERC and the Settlement Agreement Concerning License Amendment for Fish Passage, dated October 2011.

(vi) Take of MCR steelhead by any person with a valid permit issued by NMFS and a valid permit issued by the

ODFW for educational purposes, scientific purposes, and the enhancement of propagation or survival of the species, zoological exhibition, and other conservation purposes consistent with the ESA.

(3) *Take of this species that is not allowed in the NEP area.* (i) Except as expressly allowed in paragraph (a)(2) of this section, the taking of MCR steelhead is prohibited within the NEP geographic area, as provided in 50 CFR 223.203(a).

(ii) No person shall possess, sell, deliver, carry, transport, ship, import, or export, by any means whatsoever, MCR steelhead taken in violation of this paragraph (a)(3)(ii) and 50 CFR 223.203(a).

(4) *Geographic extent of the nonessential experimental population of Middle Columbia River steelhead.* (i) The geographic range of this experimental population is all accessible reaches upstream of Round Butte Dam on the Deschutes River, including tributaries Whychus Creek, Crooked River and Metolius River. More specifically, the geographic range includes all accessible reaches of the Deschutes River downstream to Round Butte Dam; the Whychus Creek subbasin; the Metolius River subbasin; and the Crooked River subbasin from Bowman Dam downstream (including the Ochoco and McKay Creek watersheds) to its point of confluence with the Deschutes River.

(ii) Round Butte Dam is the downstream terminus of this NEP. When MCR steelhead are below the Round Butte Dam, they will be outside the NEP area and thus considered part of the nonexperimental population.

(5) *Review and evaluation of nonessential experimental population.* As a requirement under its Federal license to operate the Pelton Round Butte Project, Portland General Electric Company and the Confederated Tribes of the Warm Springs Reservation of Oregon will conduct monitoring over the 50-year term of the license. This monitoring will include collecting information on the reintroduction program that NMFS will use in evaluating the NEP designation.

(6) *Time frame for NEP designation.* This NEP designation will expire on January 15, 2025.

(b) *San Joaquin River Central Valley (CV) spring-run Chinook Salmon Experimental Population (Oncorhynchus tshawytscha).* (1) The San Joaquin River CV spring-run Chinook salmon population identified in paragraph (b)(2) of this section is designated as a nonessential experimental population under section 10(j) of the ESA.

(2) San Joaquin River CV Spring-run Chinook Salmon Experimental Population. All CV spring-run Chinook salmon, including those that have been released or propagated, naturally or artificially, within the experimental population area in the San Joaquin River as defined here are considered part of the San Joaquin River experimental population. The boundaries of this experimental population area include the San Joaquin River from Friant Dam downstream to its confluence with the Merced River, delineated by a line between decimal latitude and longitude coordinates: 37.348930° N, 120.975174° W and 37.349099° N, 120.974749° W, as well as all sloughs, channels, floodways, and waterways connected with the San Joaquin River that allow for CV spring-run Chinook salmon access, but excluding the Merced River. Those portions of the Kings River that connect with the San Joaquin River during high water years are also part of the experimental population area.

(3) Prohibitions. Except as expressly allowed in paragraph (b)(4) of this section, all prohibitions of section 9(a)(1) of the ESA (16 U.S.C. 1538(a)(1)), except 9(a)(1)(C), apply to fish that are part of the threatened, nonessential experimental population of CV spring-run Chinook salmon identified in paragraph (b)(2) of this section.

(4) Exceptions to the Application of Section 9 Take Prohibitions in the Experimental Population Area. The following forms of take in the experimental population area identified in paragraph (b)(2) of this section are not prohibited by this section:

(i) Any taking of CV spring-run Chinook salmon provided that it is unintentional, not due to negligent conduct, and incidental to, and not the

purpose of, the carrying out of an otherwise lawful activity.

(ii) Any taking of CV spring-run Chinook salmon by an employee or designee of NMFS, the USFWS, other Federal resource management agencies, the California Department of Fish and Wildlife, or any other governmental entity if in the course of their duties it is necessary to: aid a sick, injured or stranded fish; dispose of a dead fish; or salvage a dead fish which may be useful for scientific study. Any agency acting under this provision must report to NMFS (see **ADDRESSES** section) the numbers of fish handled and their status on an annual basis.

(iii) Any taking of CV spring-run Chinook salmon for scientific research or enhancement purposes by a person or entity with a valid section ESA 10(a)(1)(A) permit issued by NMFS and a valid incidental take permit, consistency determination, or other take authorization issued by the CDFW.

(iv) Any taking of CV spring-run Chinook salmon for scientific research purposes by the CDFW provided that:

(A) Scientific research activities involving purposeful take are conducted by employees or contractors of CDFW or as a part of a monitoring and research program overseen by or coordinated with CDFW.

(B) CDFW provides for NMFS' review and approval a list of all scientific research activities involving direct take planned for the coming year, including an estimate of the total direct take that is anticipated, a description of the study design, including a justification for taking the species and a description of the techniques to be used, and a point of contact.

(C) CDFW annually provides to NMFS the results of scientific research activities directed at fish in the experimental population, including a report of the direct take resulting from the studies and a summary of the results of such studies.

(D) Scientific research activities that may incidentally take fish in the experimental population are either conducted by CDFW personnel, or are in accord with a permit issued by the CDFW.

(E) CDFW provides NMFS annually, for its review and approval, a report listing all scientific research activities it conducts or permits that may incidentally take fish in the experimental population during the coming year. Such reports shall also contain the amount of incidental take occurring in the previous year's scientific research activities and a summary of the results of such research.

(F) Electro fishing in any body of water known or suspected to contain fish in the experimental population is conducted in accordance with NMFS ''Guidelines for Electrofishing Waters Containing Salmonids Listed Under the Endangered Species Act'' (NMFS, 2000a).

(G) CDFW provides NMFS, for its review and approval, the Monitoring and Analysis Plan produced by the San Joaquin River Restoration Program, including an estimate of the direct and indirect take that may result from all scientific research activities in that plan for the period from January 30, 2014 until January 30, 2015.

(H) NMFS' approval of a research program shall be a written approval by the NMFS West Coast Regional Administrator.

(5) Limited Exception to the Application of Section 9(a)(1) Take Prohibitions Outside of the Experimental Population Area. The following forms of take are not prohibited:

(i) Any taking of CV spring-run Chinook salmon in those portions of the lower San Joaquin River and its tributaries, including the Merced River, downstream from its confluence with the Merced River to Mossdale County Park in San Joaquin County, that the avoidance of which would impose more than *de minimus* water supply reductions, additional storage releases, or bypass flows on unwilling persons or entities diverting or receiving water pursuant to applicable State and Federal laws.

(ii)(A) Any taking of CV spring-run Chinook salmon by the Central Valley Project (CVP) and State Water Project (SWP) that originates from reintroduction to the San Joaquin River that the avoidance of which would impose more than *de minimus* water supply reductions, additional storage releases, or bypass flows on unwilling persons or entities diverting or receiving water

pursuant to applicable State and Federal laws.

(B) NMFS will prepare a technical memorandum that describes the methodology to ensure that CV spring-run Chinook salmon originating from reintroduction to the San Joaquin River do not cause more than *de minimus* water supply reductions, additional storage releases, or bypass flows associated with the operations of the CVP and SWP under any ESA section 7 biological opinion or section 10 permit that is in effect at the time for operations of the CVP and SWP. To the maximum extent feasible, NMFS will develop this technical memorandum in coordination with and with opportunity for comment by interested parties. The first technical memorandum will be completed before CV spring-run Chinook salmon will be released in the San Joaquin River. Prior to January 15 of each succeeding year, NMFS will update the technical memorandum and, if required by the methodology, determine the share of take at the CVP and SWP facilities that originates from the reintroduction to the San Joaquin River. This share of take of CV spring-run Chinook salmon reintroduced to the San Joaquin River will be deducted from or otherwise used to adjust the operational triggers and incidental take statements associated with any biological opinion that is in effect at the time for operations of the CVP and SWP facilities. NMFS will use best available commercial or scientific information to inform these calculations. The technical memorandum and annual determination will ensure that the reintroduction of CV spring-run Chinook salmon will not result in more than *de minimus* water supply reductions, additional storage releases or bypass flows of the CVP and SWP operations under any biological opinion or ESA section 10 permit that is in effect at the time for operations of the CVP and SWP on unwilling persons or entities diverting or receiving water pursuant to applicable State and Federal laws.

(c) *Okanogan River UCR spring-run Chinook Salmon Experimental Population (Oncorhynchus tshawytscha).* (1) The Upper Columbia River (UCR) spring-run Chinook salmon population located in the geographic area identified in paragraph (c)(5) of this section shall comprise the Okanogan River nonessential experimental population (NEP), and shall be treated as a ''threatened species'' pursuant to 16 U.S.C. 1539(j)(2)(C).

(2) *Prohibitions.* Except as provided in paragraph (c)(3) of this section, the prohibitions of section 9(a)(1) of the ESA (16 U.S.C. 1538(a)(1)) relating to endangered species apply to UCR spring-run Chinook salmon in the Okanogan River NEP Area, defined in paragraph (c)(5) of this section.

(3) *Exceptions to the Application of Section 9 Take Prohibitions in the Experimental Population Area.* Take of UCR spring-run Chinook salmon that is otherwise prohibited by paragraph (c)(2) of this section and 50 CFR 223.203(a) in the Okanogan River NEP Area is allowed, except as otherwise noted, provided it falls within one of the following categories:

(i) Any activity taken pursuant to a valid permit issued by NMFS under § 223.203(b)(1) and (7) for scientific research activities;

(ii) Aid, disposal, or salvage of fish by authorized agency personnel acting in compliance with 50 CFR 223.203(b)(3);

(iii) Activities associated with artificial propagation of the experimental population under an approved Hatchery Genetic Management Plan (HGMP) that complies with the requirements of 50 CFR 223.203(b)(5);

(iv) Any harvest-related activity undertaken by a tribe, tribal member, tribal permittee, tribal employee, or tribal agent consistent with tribal harvest regulations and an approved Tribal Resource Management Plan (TRMP) that complies with the requirements of 50 CFR 223.204;

(v) Any harvest-related activity consistent with state harvest regulations and an approved Fishery Management Evaluation Plan (FMEP) that complies with the requirements of 50 CFR 223.203(b)(4); or

(vi) Any take that is incidental to an otherwise lawful activity, provided that the taking is unintentional; not due to negligent conduct; and incidental to, and not the purpose of, the carrying out of the otherwise lawful activity. Otherwise lawful activities

include, but are not limited to, agricultural, water management, construction, recreation, navigation, or forestry practices, when such activities are in full compliance with all applicable laws and regulations. Any fish that is incidentally taken in a manner allowed by this paragraph may not be collected and must be immediately returned to its habitat.

(4) *Prohibited take outside the NEP area.* Outside the Okanogan River NEP Area, UCR spring-run Chinook salmon are not considered to be part of the NEP, irrespective of their origin, and therefore the take prohibitions for endangered UCR spring-run Chinook salmon apply.

(5) *Geographic extent of the Okanogan River NEP Area.* The geographic boundary defining the Okanogan River NEP Area for UCR spring-run Chinook salmon is the mainstem and all tributaries of the Okanogan River between the Canada-United States border to the confluence of the Okanogan River with the Columbia River. All UCR spring-run Chinook salmon in this defined Okanogan River NEP Area are considered part of the NEP, irrespective of where they originated.

[78 FR 2907, Jan. 15, 2013, as amended at 78 FR 79632, Jan. 30, 2014; 79 FR 40015, July 11, 2014]

FIGURES 1–2 TO PART 223 [RESERVED]

FIGURE 3 TO PART 223—MATAGORDA TED

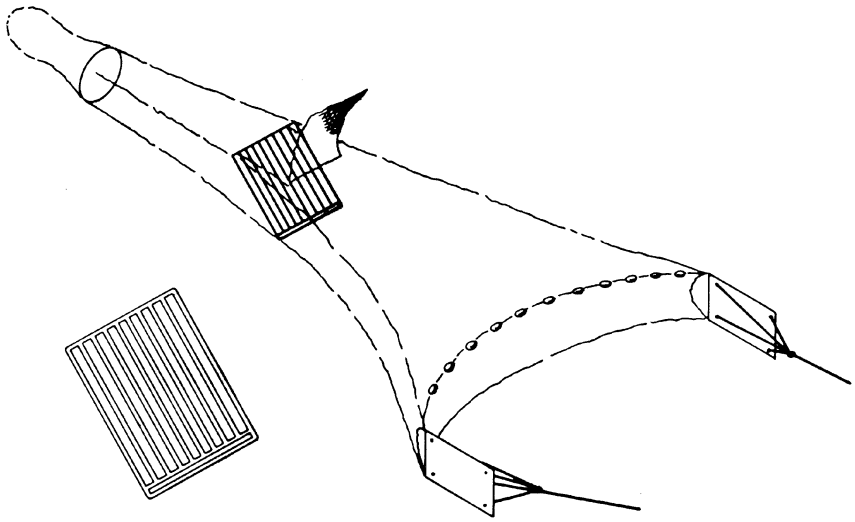

[52 FR 24260, June 29, 1987. Redesignated at 57 FR 40868, Sept. 8, 1992]

FIGURE 4 TO PART 223—GEORGIA TED

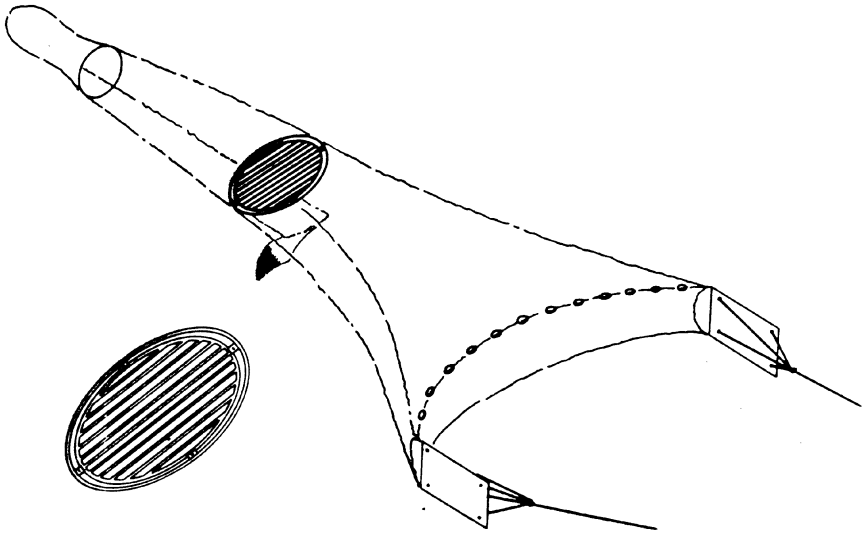

[52 FR 24261, June 29, 1987. Redesignated at 57 FR 40868, Sept. 8, 1992]

FIGURE 5 TO PART 223—NET DIAGRAM FOR THE EXCLUDER PANEL OF THE PARKER SOFT TED

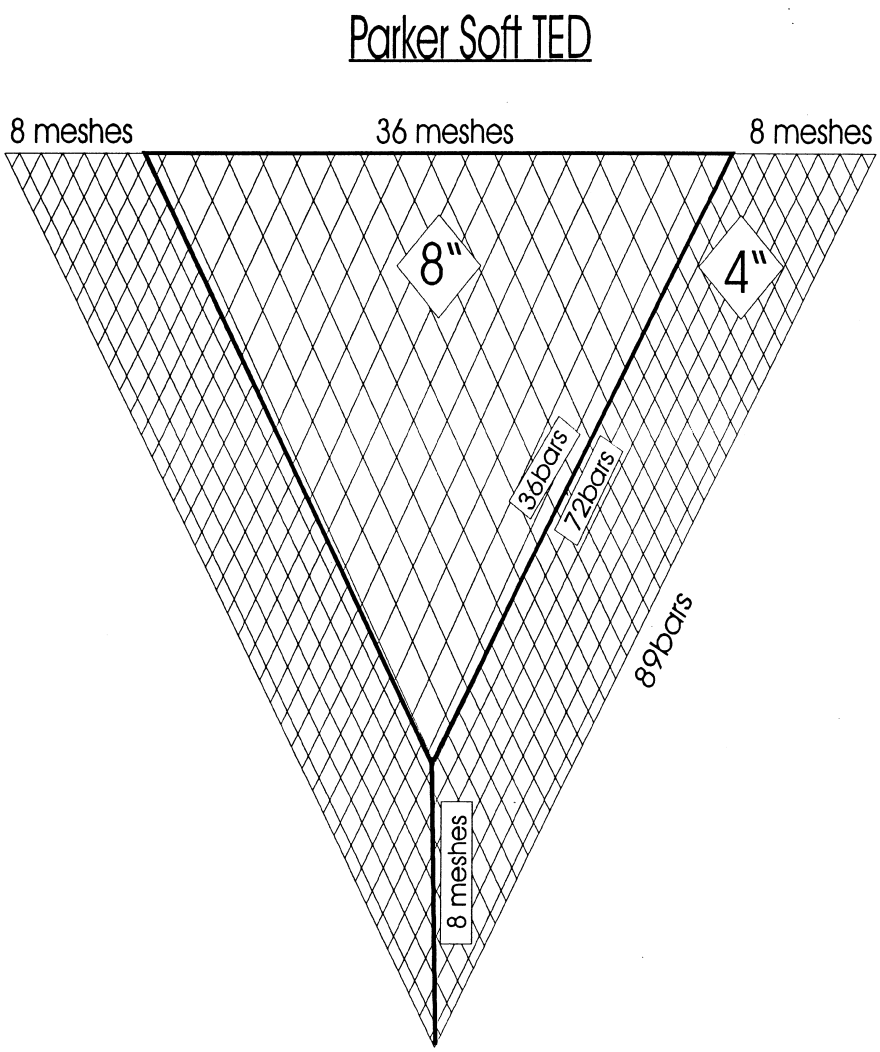

The side panels are composed from 4-inch stretched mesh polyethylene or polypropylene webbing with No.48 twine size (3mm).

The main panel is composed of 8-inch stretced mesh polyethylene or polypropylene webbing with No.48 twine size (3mm).

[63 FR 17958, Apr. 13, 1998]

FIGURE 6 TO PART 223—TED EXTENSION IN SUMMER FLOUNDER TRAWL

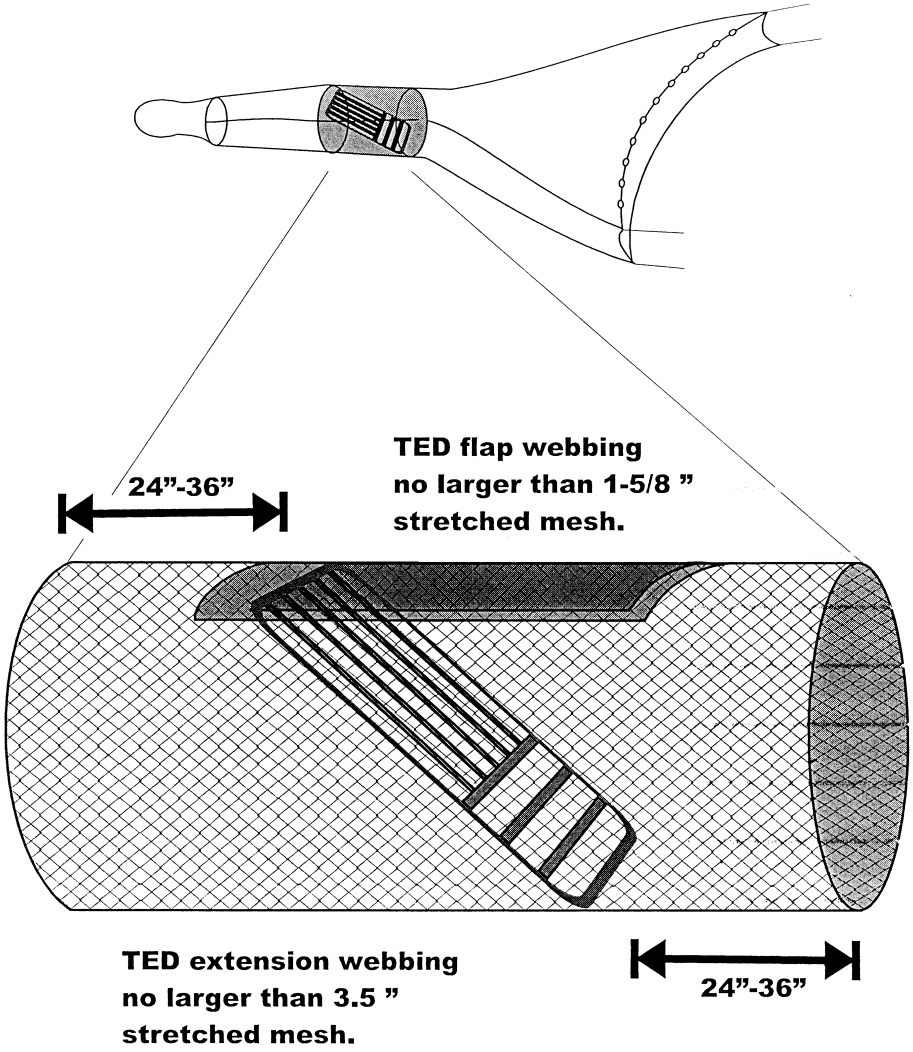

[64 FR 55864, Oct. 15, 1999]

FIGURES 7–9b TO PART 223 [RESERVED]

FIGURE 10 TO PART 223—FLOUNDER TED

FLOUNDER TED

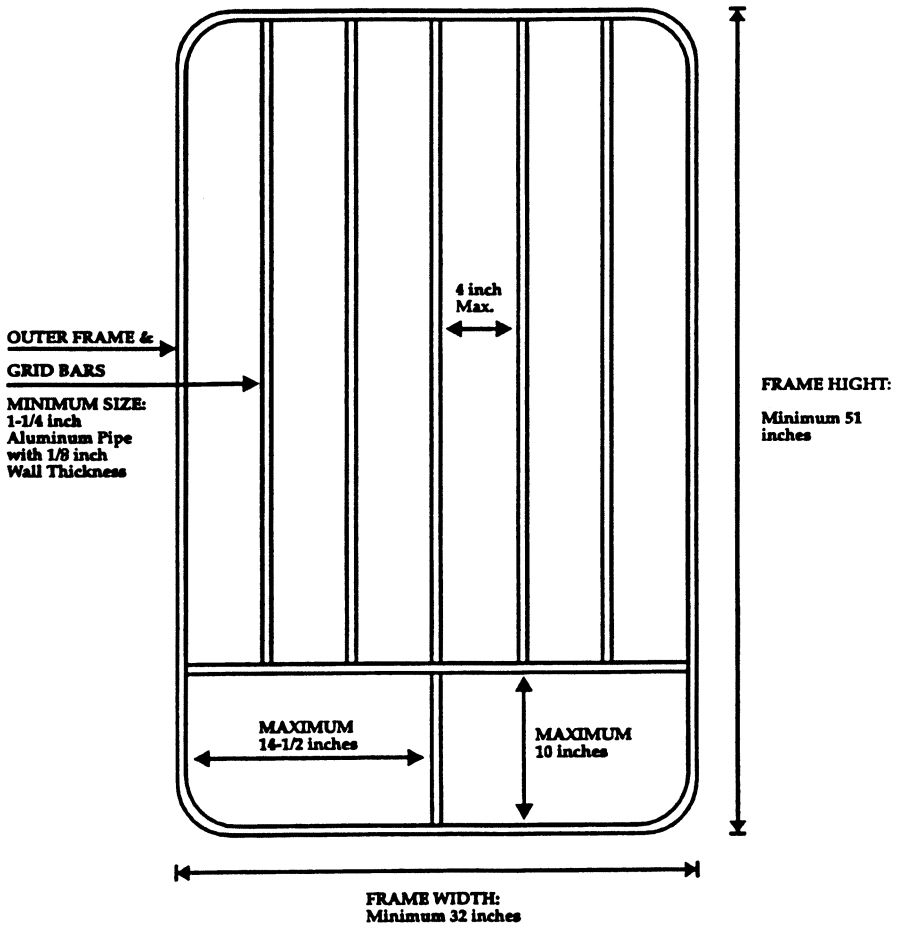

[58 FR 54069, Oct. 20, 1993]

FIGURE 11 TO PART 223—MODIFIED FLOUNDER TED

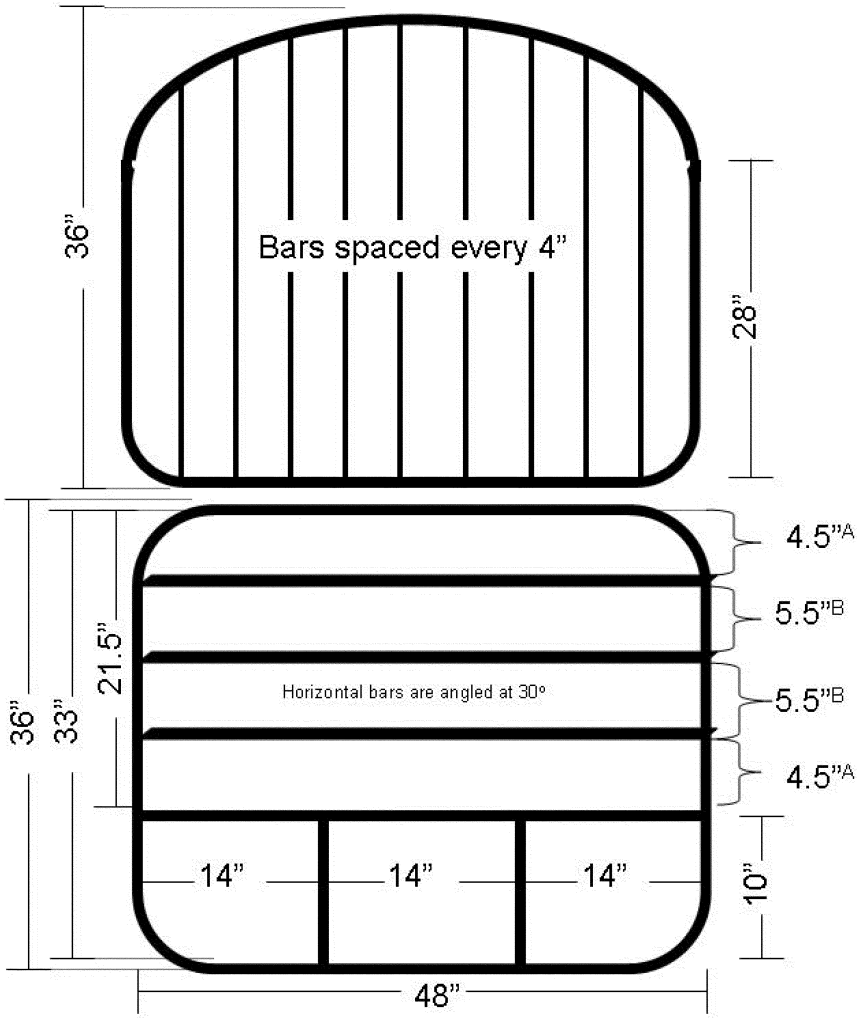

All pipe must be a minimum of 1.25" O.D.; horizontal flat bars shall be a minimum of 1.5" x 0.375"; vertical flat bars shall be a minimum of 1.25" x 0.375"

[A] – Space between edge of round bar and the leading edge of the adjacent bar is 4.5"

[B] – Space between leading edge of one bar and the leading edge of the adjacent bar is 5.5"

FIGURE 11 TO PART 223 -- MODIFIED FLOUNDER TED

[77 FR 29910, May 21, 2012]

FIGURE 12 TO PART 223—ESCAPE OPENING & COVER DIMENSIONS FOR 71-INCH TED

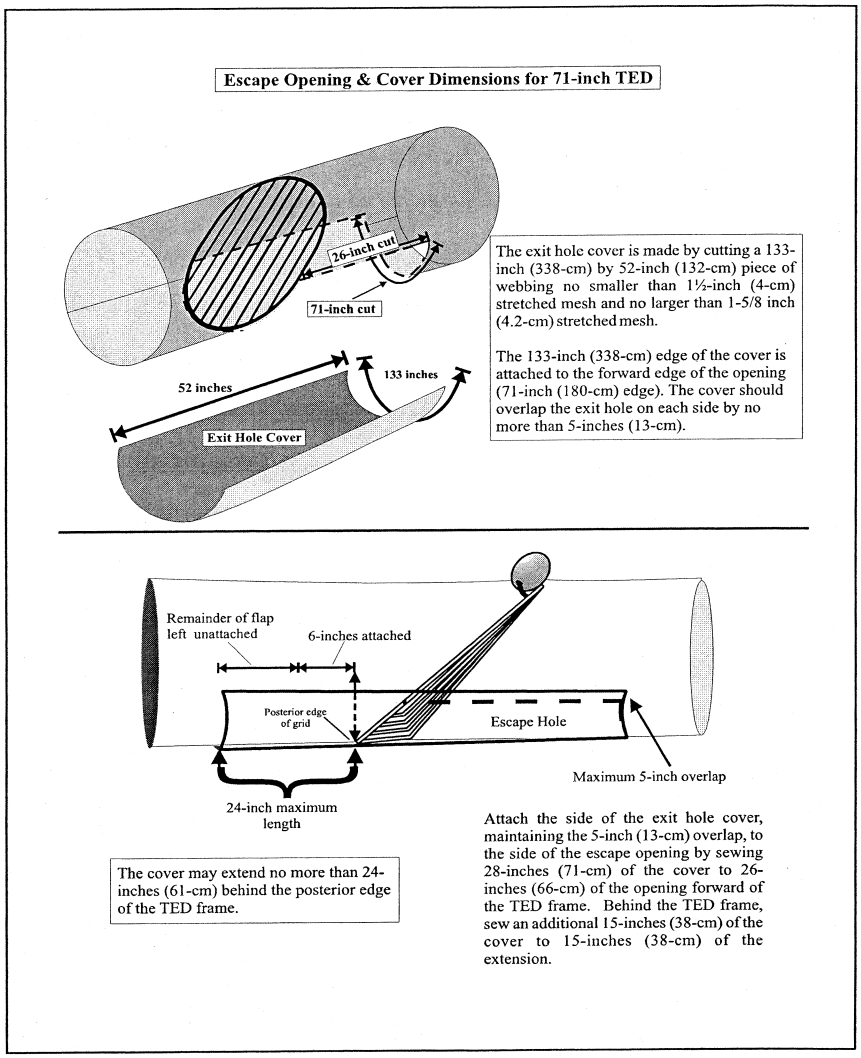

Figure 12 to Part 223

[68 FR 8469, Feb. 21, 2003]

FIGURE 13 TO PART 223—SINGLE GRID HARD TED ESCAPE OPENING

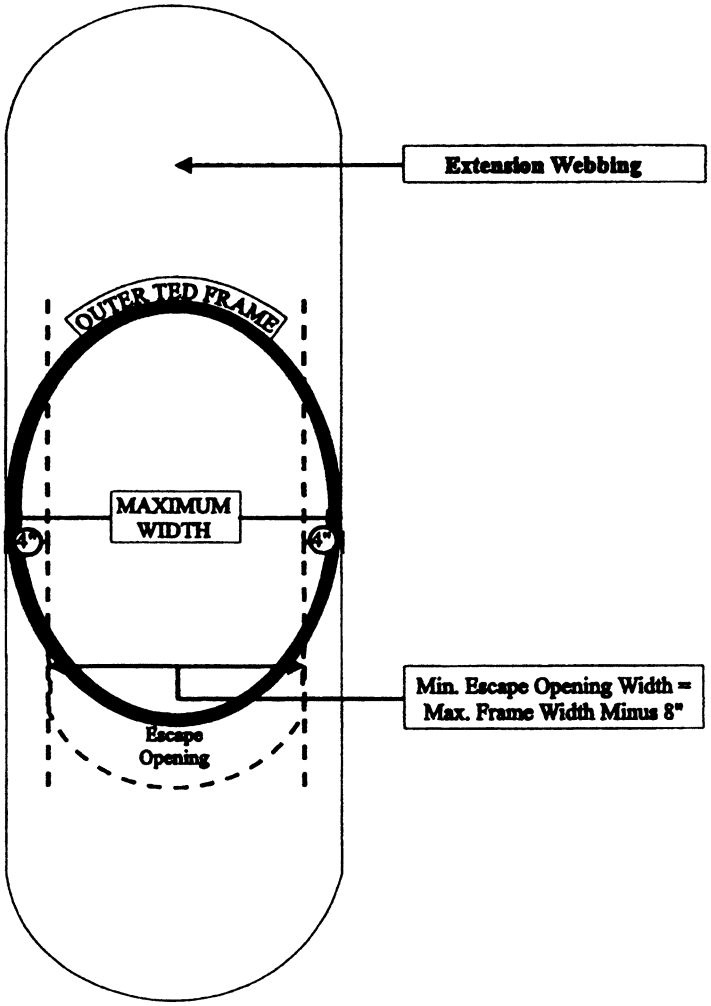

[60 FR 15520, Mar. 24, 1995]

FIGURES 14a AND 14b TO PART 223—MAXIMUM ANGLE OF DEFLECTOR BARS WITH STRAIGHT BARS ATTACHED TO THE BOTTOM OF THE FRAME AND MAXIMUM ANGLE OF DEFLECTOR BARS WITH BENT BARS ATTACHED TO THE BOTTOM OF THE FRAME

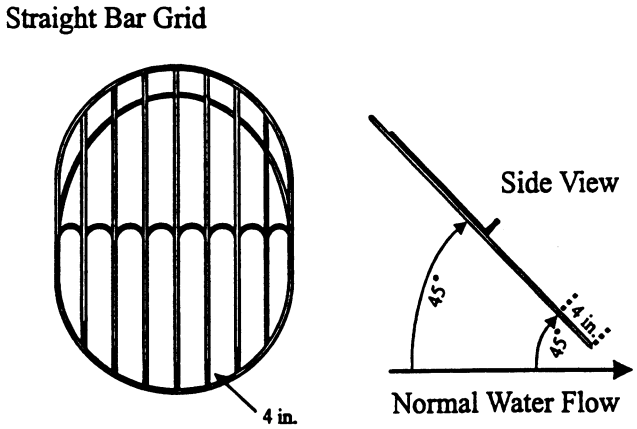

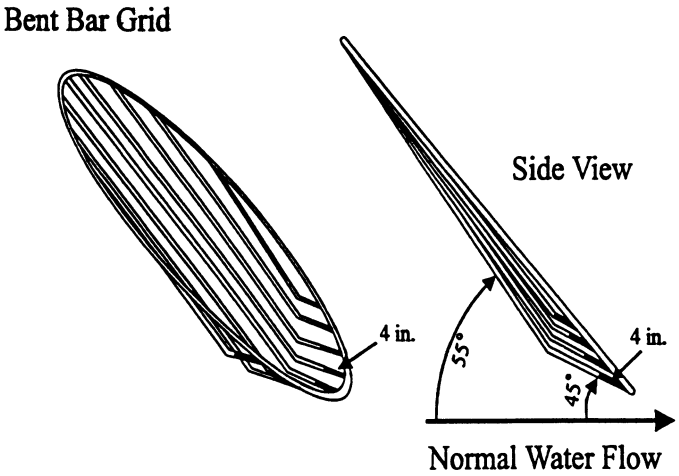

[61 FR 66946, Dec. 19, 1996]

FIGURE 15 TO PART 223—WEEDLESS TED BRACE BAR DESCRIPTION

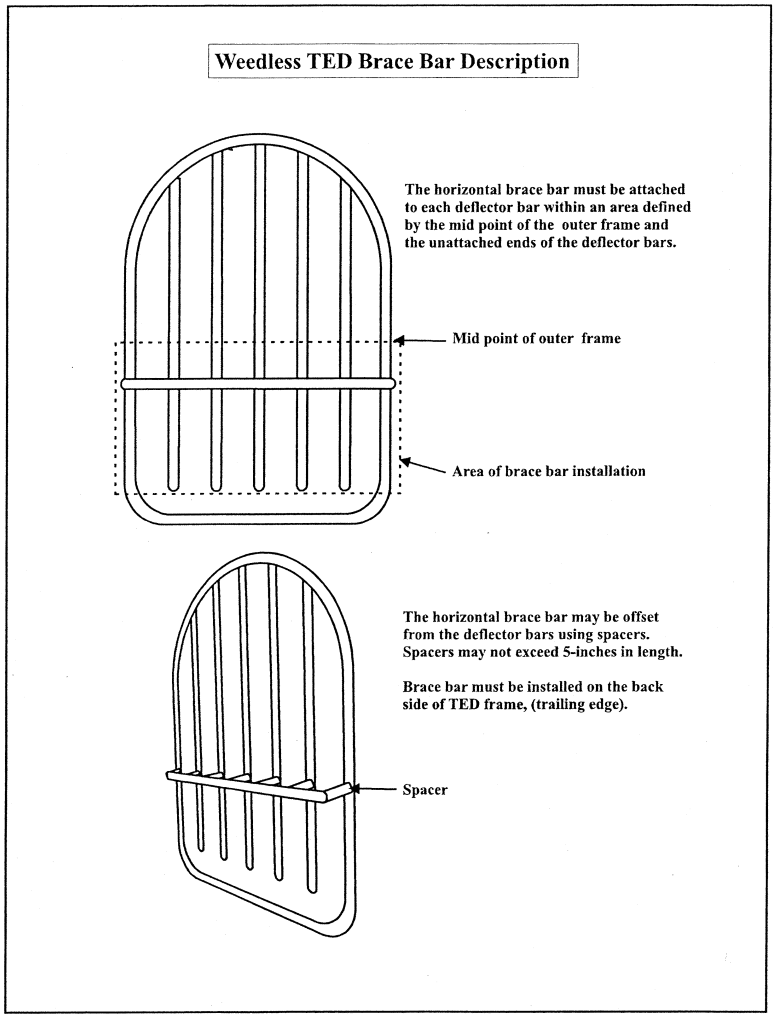

Figure 15 to Part 223

[68 FR 8469, Feb. 21, 2003]

FIGURE 16 TO PART 223—ESCAPE OPENING AND FLAP DIMENSIONS FOR THE DOUBLE COVER FLAP TED

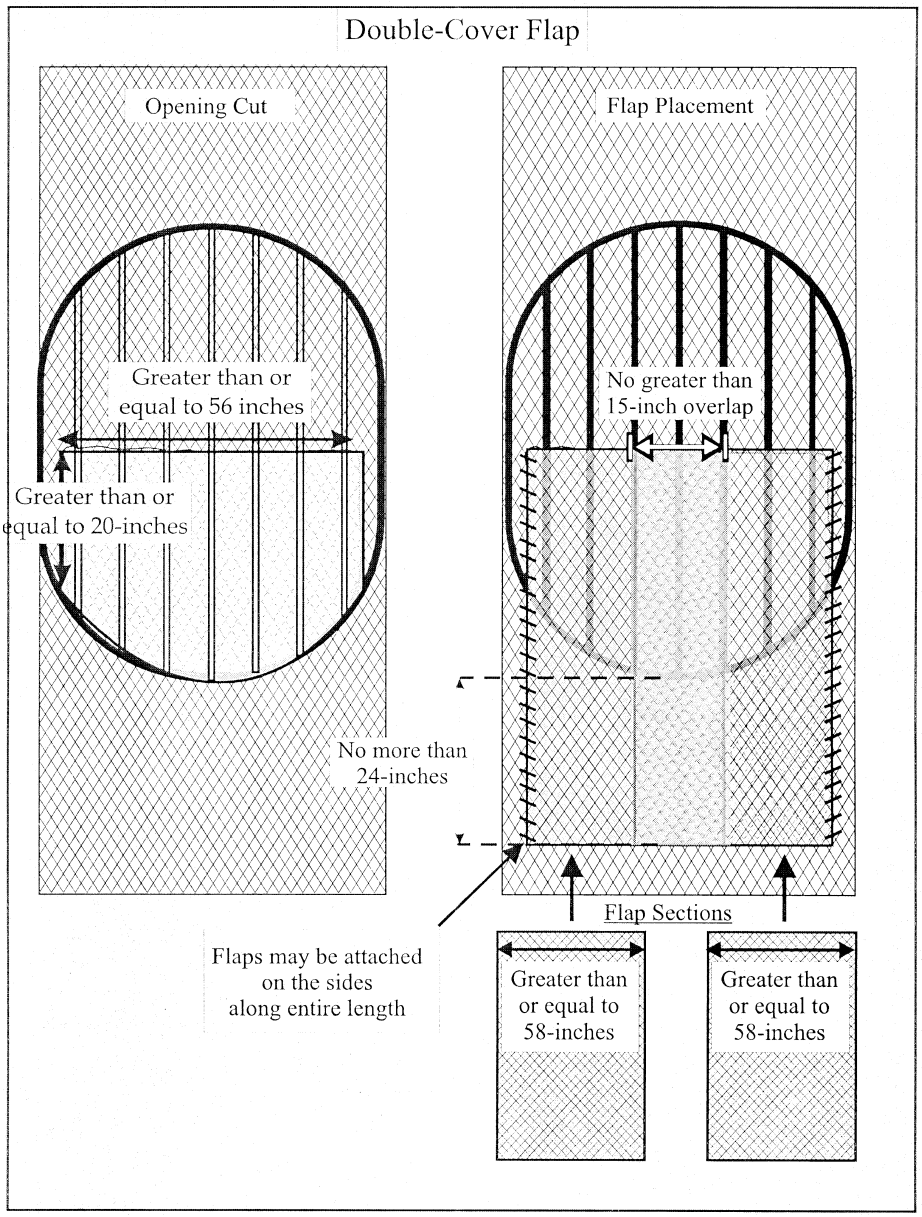

[69 FR 31037, June 2, 2004]

FIGURE 17 TO PART 223—BOONE WEDGE CUT ESCAPE OPENING

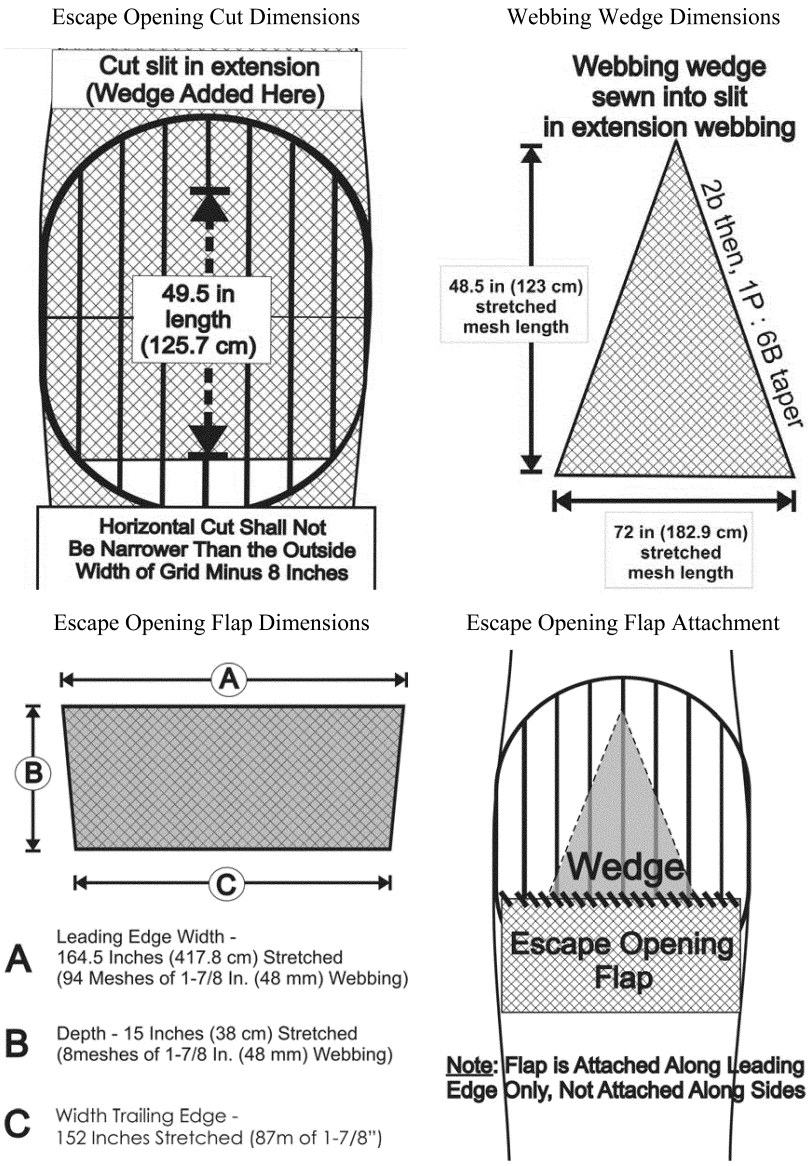

FIGURE 17 TO PART 223 -- BOONE WEDGE CUT ESCAPE OPENING

[77 FR 29911, May 21, 2012]

FIGURES 18a, 18b AND 18c TO PART 223—LARGE FRAME TED ESCAPE OPENING; MINIMUM DIMENSIONS USING ALL-BAR CUTS (TRIANGULAR CUTS); LARGE FRAME TED ESCAPE OPENING; MINIMUM DIMENSIONS USING ALL-BAR CUTS AND LEADING EDGE CUT; LARGE FRAME TED ESCAPE OPENING; MINIMUM DIMENSIONS USING ALL-POINTS SIDE CUTS (RECTANGULAR CUT)

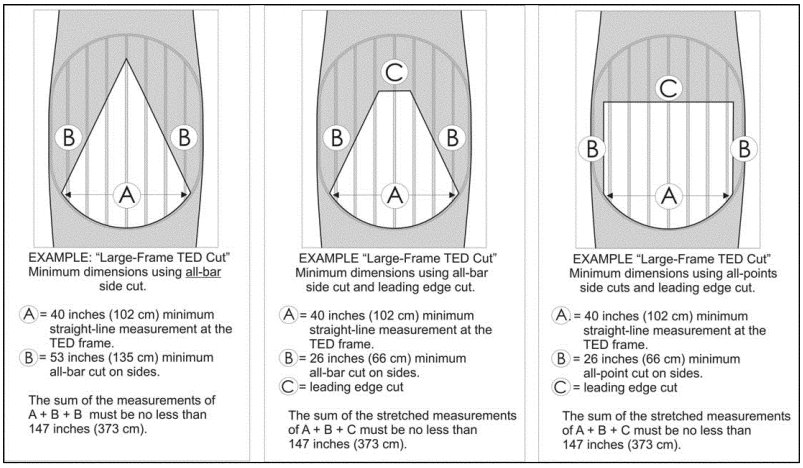

FIGURES 18a, 18b, AND 18c TO PART 223. LARGE FRAME TED ESCAPE OPENING: MINIMUM DIMENSIONS USING ALL-BAR CUTS (TRIANGULAR CUT); LARGE FRAME TED ESCAPE OPENING: MINIMUM DIMENSIONS USING ALL-BAR CUTS AND LEADING EDGE CUT; LARGE FRAME TED ESCAPE OPENING: MINIMUM DIMENSIONS USING ALL-POINTS SIDE CUT (RECTANGULAR CUT)

[77 FR 29912, May 21, 2012]

Pt. 223, Figs. 19 Figures 19a and 19b to Part 223—Chauvin Shrimp Deflector Installation Details

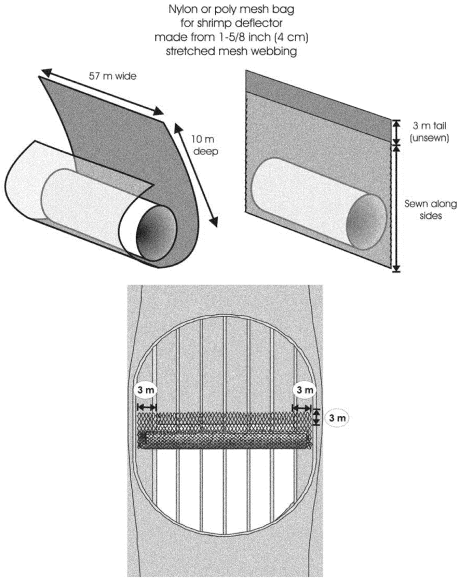

FIGURES 19a AND 19b TO PART 223. CHAUVIN SHRIMP DEFLECTOR INSTALLATION DETAILS

[77 FR 29912, May 21, 2012]

PART 224—ENDANGERED MARINE AND ANADROMOUS SPECIES

Sec.
224.101 Enumeration of endangered marine and anadromous species.
224.102 Permits for endangered marine and anadromous species.
224.103 Special prohibitions for endangered marine mammals.
224.104 Special requirements for fishing activities to protect endangered sea turtles.
224.105 Speed restrictions to protect North Atlantic Right Whales.

AUTHORITY: 16 U.S.C. 1531–1543 and 16 U.S.C. 1361 *et seq.*

SOURCE: 64 FR 14066, Mar. 23, 1999, unless otherwise noted.

§ 224.101 Enumeration of endangered marine and anadromous species.

(a) The regulations in this part identify the species under the jurisdiction of the Secretary of Commerce that have been determined to be endangered species pursuant to section 4(a) of the Act, and provide for the conservation of such species by establishing rules and procedures to governing activities involving the species.

(b) The regulations in this part apply only to the endangered species enumerated in this section.

(c) The provisions of this part are in addition to, and not in lieu of, other regulations of parts 222 through 226 of this chapter which prescribe additional restrictions or conditions governing endangered species.

(d) The table below identifies the species under the jurisdiction of the Secretary of Commerce that have been determined to be endangered pursuant to section 4(a) of the Act, species treated as endangered because they are sufficiently similar in appearance to endangered species, and experimental populations of endangered species.

(e) The columns entitled ''Common name,'' ''Scientific name,'' and ''Description of listed entity'' define the species within the meaning of the Act. In the ''Common name'' column, experimental populations are identified as ''XE'' for essential populations or ''XN'' for nonessential populations. Species listed based on similarity of appearance are identified as ''S/A.'' Although a column for ''Common name'' is included, common names cannot be relied upon for identification of any specimen, because they may vary greatly in local usage. The ''Scientific name'' column provides the most recently accepted scientific name, relying to the extent practicable on the *International Code of Zoological Nomenclature*. In cases in which confusion might arise, a synonym(s) will be provided in parentheses. The ''Description of listed entity'' column identifies whether the listed entity comprises the entire species, a subspecies, or a distinct population segment (DPS) and provides a description for any DPSs. Unless otherwise indicated in the ''Description of listed entity'' column, all individual members of the listed entity and their progeny retain their listing status wherever found, including individuals in captivity. Information regarding the general range of the species, subspecies, or DPS may be found in the FEDERAL REGISTER notice(s) cited in the ''Citation(s) for listing determination(s)'' column.

(f) The ''Citation(s) for listing determination(s)'' column provides reference to the FEDERAL REGISTER notice(s) determining the species' status under the Act. The abbreviation ''(SPR)'' (significant portion of its range) after a citation indicates that the species was listed based on its status in a significant portion of its range. If a citation does not include the ''(SPR)'' notation, it means that the species was listed based on its status throughout its entire range. For ''(SPR)'' listings, a geographical description of the SPR may be found in the referenced FEDERAL REGISTER Notice. The ''(SPR)'' notation serves an informational purpose only and does not imply any limitation on the application of the prohibitions or restrictions of the Act or implementing rules.

(g) The ''Critical habitat'' and ''ESA rules'' columns provide cross-references to other sections in this part and part 226. The term ''NA'' appearing in the ''Critical habitat'' column indicates that there are no critical habitat designations for that species; similarly, the term ''NA'' appearing in the ''ESA rules'' column indicates that there are no ESA rules for that species. However, all other applicable rules in parts 222